THE GEAR MOTOR SPECIALIST

BAUER



Energy Efficient Three Phase Geared Motors

Catalogue Edition 01/2011 EN

Catalogue geared motors

Edition 01/2011

		Page
General		**11-14**
Product Description		**15-20**
Type Designations		**21-30**
Gear Motor Selection		**31-52**
Gearboxes and Lubrication	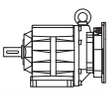	**53-80**
Helical-Geared Motors Series BG Selection	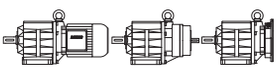	**81-190**
Parallel Shaft-Geared Motors Series BF Selection	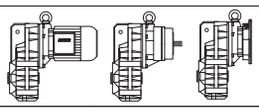	**191-280**
Becel-Geared Motors Series BK Selection	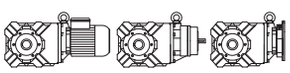	**281-354**
Worm-Geared Motors Series BS Dimensions	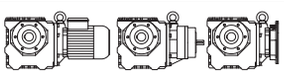	**355-398**
Helical-Geared Motors Series BG Dimensions	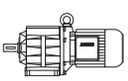	**399-452**
Parallel Shaft-Geared Motors Series BF Dimensions	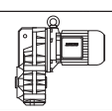	**453-500**
Bevel-Geared Motors Series BK Dimensions	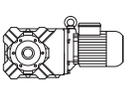	**501-550**
Worm-Geared Motors Series BS Dimensions	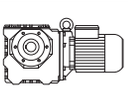	**551-588**
Input group Dimensions	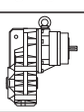	**589-674**
Motors	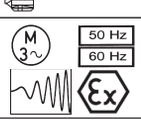	**675-726**
Motor Mounted Components	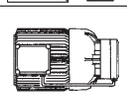	**727-752**
Motor Mounted Components Dimensions	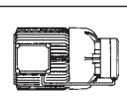	**743-768**
Electronics	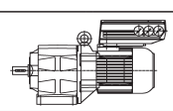	**769-784**
BAUER global		**785-803**

BAUER
THE GEAR MOTOR SPECIALIST

Fast - Flexible - Reliable

…As one of the leading manufacturers of intelligent drive technology, we have lived this motto for more than 80 years.
Innovative products, modern processes and responsible employees realise this motto with the target of conserving resources and the environment together with efficient energy use over our whole field of activity.
The success of our efforts assumes that we know and master our customers applications and the requirements on drive technology.
We do this perfectly - from engineering, design and calculation through procurement, production and logistic to special application knowledge in the most important branch sectors.

CD Rom:



Internet: **WWW.BAUERGEARS.DE**

Publications:

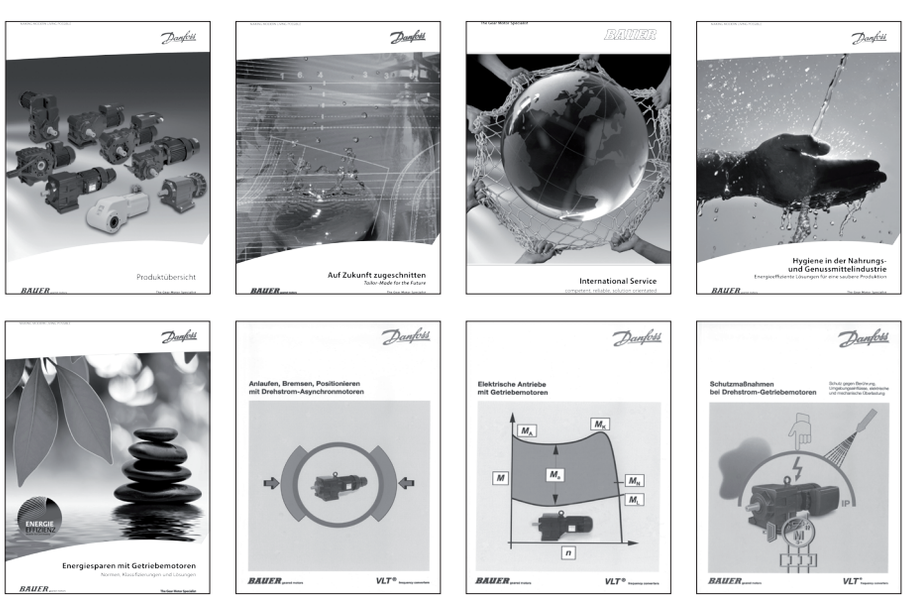

General Terms and Conditions of Sale

International, excluding USA/Canada (Edition December 2007)

These General Terms and Conditions of Sale ("Terms") apply to all deliveries of products and services ("Products") from Danfoss A/S or its Affiliates (each of which is referred to as "Danfoss") to any customer ("Customer"). In these Terms "Affiliate" shall mean an entity directly or indirectly controlled by Danfoss A/S whether by shares or voting rights.

No terms and conditions other than the Terms shall be binding upon Danfoss and Customer unless agreed in writing by Danfoss and Customer. All terms and conditions contained in any prior communication which are different from or in addition to the Terms shall not be binding on Danfoss unless otherwise expressly agreed in writing by Danfoss and Customer.

1. Confirmation of Order
Danfoss shall not be deemed to have accepted a purchase order until written, including electronic, confirmation of the order from Danfoss is received by Customer or Danfoss has received written, timely and unconditional acceptance from Customer of Danfoss' quotation.

2. Terms of Delivery
The Products are delivered EXW from, at Danfoss' option, any of Danfoss' factories or places of business. Failing special instructions, Danfoss has the right to dispatch the Products to Customer at the risk and expense of Customer by a transport method chosen by Danfoss. EXW shall be interpreted in accordance with the Incoterms valid on the time of acceptance of the purchase order or quotation.

3. Delay
If Danfoss does not deliver at the agreed time, Customer is entitled to request delivery in writing and fix a final, reasonable time limit for delivery. If delivery is not made within this time limit, Customer is entitled to rescind the agreement of sale and claim compensation for its documented, direct loss. No further claims can be made by Customer as a result of the delay.

4. Prices
Prices for Products are exclusive of VAT and/or other taxes or duties. Danfoss reserves the right to adjust prices for non-delivered Products in the event of alterations in rates of exchange, variations in costs of materials, sub-suppliers' price increases, changes in wages, state requisitions or similar conditions over which Danfoss has no or limited control.

5. Packing
Disposable packing is included in the prices and will not be credited if returned. Returnable packing is not included in the price, but will be credited if returned without undue delay in undamaged condition at Customer's expense, in accordance with Danfoss' instructions.

6. Terms of Payment
Due date is 30 days from the date of invoice. From due date an interest rate of the lesser of 2 % per month or the highest rate allowable under applicable law will be payable.

7. Group Set-off
Danfoss and its Affiliates shall be entitled to set off own claims against and withhold payments to Customer in Customer's possible claims against any of said companies.

8. Product Information
Any information – irrespective of derivation from Danfoss or a Danfoss business contact – including, but not limited to information on weight, dimensions, capacity or any other technical data in catalogues descriptions, advertisements, etc. shall be considered informative, and are only binding if and to the extent, explicit reference on this is made in offer and/or order confirmation. Specific demands from the Customer are only binding if and to the extent they have been confirmed by Danfoss in writing.

9. Proprietary Information and Confidentiality
Any non-public information, including but not limited to, prices, drawings, descriptions and any technical documents which Danfoss has made or may make available to Customer ("Confidential Information") shall remain the property of Danfoss and shall be treated as confidential by Customer and its representatives and must not, without the written consent of Danfoss, be copied, reproduced, or transferred to third parties or be used for other purposes than those intended when the Confidential Information was made available. Confidential Information shall be returned upon Danfoss' request.

10. Alterations
Danfoss reserves the right to make alterations to the Products, which do not materially affect agreed specifications or the Products' form, fit or function, without notice.

11. Cost-free Repairs
Danfoss agrees to repair or replace at the discretion of Danfoss such Products that on Danfoss' examination are found to be defective at the time of delivery due to faulty manufacture, design and/or defective materials, provided Customer makes a claim to Danfoss within 12 months from the date of delivery, however never exceeding 18 months from the date stamped on the product.

If defects occur within the above mentioned period, the Product shall be forwarded to Danfoss together with a written notice describing the reason for returning the Product. Freight and insurance shall be paid by Customer. Products returned shall be free of extraneous equipment. However, compressors must be fitted with their electrical equipment. If Danfoss' examination shows that the Product is not faulty, the Product shall be returned to Customer. Freight and insurance shall be paid by Customer. If Danfoss ascertains that the Product is faulty, Danfoss shall send the repaired or a replacement Product to Customer. Danfoss may choose the method of dispatch and pays freight and insurance. Products or product parts which have been replaced shall be the property of and retained by Danfoss. Warranties, conditions and other terms implied by statute or otherwise shall be excluded other than those, that cannot be excluded by applicable law.

12. Product Liability
Danfoss shall not be liable for any damage to real property or chattels caused by the Product after it has been delivered and whilst it is in the possession of Customer. Nor shall Danfoss be liable for any damage to products manufactured by Customer or to products of which Customer's products form a part.

If Danfoss incurs liability towards any third party for such damage as described in the preceding paragraph, Customer shall indemnify, defend and hold Danfoss harmless. Customer shall indemnify and hold Danfoss harmless for all claims arising from damage resulting from the use or operation of the Products because of the improper repair, maintenance or operation of the Products by Customer, the failure of Customer to adequately train personnel in the operation of the Products, Customer's failure to comply with applicable laws or regulations or otherwise.

If a claim for damage as described in this clause is lodged by a third party against either Danfoss or Customer, the respondent party shall immediately inform the other party thereof in writing. Customer shall be obliged to let itself be summoned to the court or arbitral tribunal examining claims for damages lodged against Danfoss on the basis of damage allegedly caused by the Product.

13. Secondary Damage
Danfoss shall not be liable to Customer for any of the following types of loss or damage arising under or in relation to a purchase agreement governed by these Terms: 1) any loss of profits, business, contracts, anticipated savings, goodwill, or revenue; or 2) any loss or corruption of data; or 3) any indirect or consequential loss or damage whatsoever; even if Danfoss was advised in advance of the possibility of such loss or damage.

14. Mandatory liability
Nothing in these Terms (including but not limited to the exclusions and limitations in clause 11 to 13) shall operate so as to exclude or limit the liability of either party to the other for death or personal injury arising out of its negligence, fraudulent misrepresentation or for any other liability which cannot be excluded or limited by law.

15. Notice of Claims
Claims or complaints as to defects and/or delay in delivery of the Products or other claims shall be submitted in writing by Customer to Danfoss without undue delay.

16. Intellectual Property Rights
If the Product is delivered with embedded software, Customer obtains a non-exclusive software license in form of a right of use to the software solely for the purposes set out in applicable specification of the Product. Aside from this, Customer obtains no rights in form of license, patent, copyright, trademark or other proprietary right connected to the Products. Customer shall not obtain any rights to source codes to such software.

17. Restraint on Resale and Use for Certain Purposes
Danfoss products are produced for civilian use and Customer is not allowed to use or to resell the Products for purposes which have any connection to chemical, biological or nuclear weapons or for missiles which are capable of delivering such weapons. Customer is not allowed to sell the Products to persons, companies or any other kind of organization if Customer has knowledge of or suspects that said persons or entities are related to any kind of terrorist or narcotics activities. The Products may be subject to legal regulations and restrictions and may therefore be subject to restrictions in case of sale to countries/customers covered by export and import ban. These restrictions shall be observed in case of resale of the Products to such countries/customers.

Customer is not allowed to resell the Products if there is doubt or suspicion that the Products can be used for the purposes mentioned in the preceding paragraph. If Customer receives knowledge of or suspects that the conditions in this clause have been violated, Customer shall immediately inform Danfoss.

18. Force Majeure
Danfoss is entitled to cancel orders or suspend delivery of Products and shall not be liable for any non-delivery, faulty or delayed delivery, which partly or wholly is caused by circumstances beyond Danfoss' reasonable control, including, but not limited to, riots, civil unrest, war, terrorism, fire, insurrection, requisition, seizure, embargo or defects or delays in deliveries by sub-contractors, strikes, lockouts, slow downs, lack of transportation, scarcity of materials, sickness accidents in product testing, and insufficient supplies of energy. Any of Customer's contractual rights are suspended or become void in any such circumstances referred to in this clause. Customer is not entitled to any kind of damages or to make a claim whatsoever in case of cancellation or delayed delivery due to such circumstances.

19. Global Compact
Danfoss has joined the United Nations' Global Compact initiative which means that Danfoss has undertaken to live up to 10 principles on human rights, employees' rights, the environment and corruption. These principles are listed in "Danfoss Code of Conduct for Suppliers" to be seen on www.danfoss.com. Therefore Danfoss encourages Customer to comply with these fundamental principles. For further information on Global Compact: http://www.unglobalcompact.org.

20. Partial Invalidity
If one or more of the terms and conditions in these Terms or any part of a term is deemed invalid, unenforceable, illegal or inoperable, the validity, enforceability, legality or operability of all further terms and conditions shall not be affected or diminished thereby.

21. Governing law and Disputes
Any dispute between the parties arising from or in connection with a purchase agreement governed by these Terms shall be governed by Danish law including the United Nations' Convention for the International Sale of Goods (CISG), with the exception of the conflict of law provisions.

Any dispute arising from or in connection with a purchase agreement governed by these Terms and which the parties themselves are unable to resolve shall be referred to and settled by arbitration under the Rules of Arbitration of the International Chamber of Commerce, Paris ("Rules") by one or more arbitrators appointed in accordance with said Rules. Either Party shall be entitled to seek injunctive or interim relief or any other temporary measures. The Parties may refer the enforcement of any arbitral award to any competent court. The seat of arbitration shall be Copenhagen, Denmark. English shall be the language to be used in the arbitration proceedings unless otherwise agreed between the parties. The arbitration proceedings and the arbitral award shall be confidential and involved persons on both sides are pledged to secrecy.

NOTE: The most recent version of the Terms and Conditions can be found under „www.bauergears.com"

Catalogue geared motors

Range of products



Helical-Geared Motor – BG series

Compact and economical inline helical-geared motors designed to do practically without service.

- Motor power from 0.03 kW to 90 kW
- 13 gearbox sizes for torques from 20 Nm to 18500 Nm
- New attachment possibilities with low design height
- High efficiency through 2 stage base design
- Enclosure IP65 as standard
- Service friendly built-on brake



Shaft-Mounted Geared Motor – BF series

Shaft-mounted geared motors with integrated torque arm are easily integrated and economically applied.

- Gearbox housing with integral torque arm
- Motor power from 0.03 kW to 90 kW
- 10 gearbox sizes for torques from 90 Nm to 18500 Nm
- High efficiency through 2 stage base design
- Enclosure IP65 as standard
- Service friendly built-on brake



Bevel-Geared Motor – BK series

Power-dense, right-angle, bevel-geared motors ensure the highest efficiency especially when used with frequency inverters.

- The right angle gearbox with universal attachement possibilities
- Motor power from 0.03 kW to 90 kW
- 10 gearbox sizes for torques from 80 Nm to 18500 Nm
- High efficiency through 2 stage base design
- Enclosure IP65 as standard
- Service friendly built-on brake



Bevel-Geared Motor – BS series

Economical, right-angle, worm-geared motors install easily in the tightest applications.

- Motor power from 0.03 kW to 5.5 kW
- 8 gearbox sizes for torques from 25 Nm to 1000 Nm
- Hollow shaft version already available from 25 Nm
- High loadable worm gearing for long lifetime
- Enclosure IP65 as standard
- Service friendly built-on brake

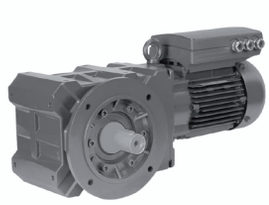

EtaSolution series K

EtaSolution series K geared motors are combinations of geared motors and frequency converters. They provide compact drive solutions with infinite speed control.

- Saving space and costs
- No shielded motor cables required
- Mechatronic adaption of VLT drive and geared motor
- Motor power range 0.12 kW up to 7.5 kW
- Supply voltage 3 x 380 V - 480 V
- Compliance to all EMC standards
- Standard RS485-Interface, optional Profibus-Interface
- Ⓔx Zone 2 and 22 possible

CAGE CLAMP®

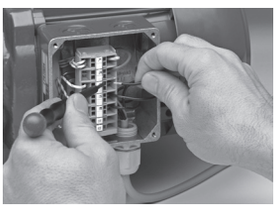

The use of BAUER Geared Motors up to 30 kW with CAGE CLAMP® connection technology reduce costs both during installation and in service cases.

- Cost reduction during connection
- Simple handling
- Cable core diameters up to 25 mm²
- Cost saving in material and tooling
- Vibration and shock resistant
- Ⓔx approved

AsepticDrive™



Geared motors for the food & beverage industry as well as for all applications with high cleaning intensity or ambient conditions such as dust, fluff etc.

- Motor without fan and cooling fins
- Motor power DA08 from 0.25 kW to 0.55 kW
- Motor power DA09 from 0.37 kW to 1.5 kW
- Motor power DA11 from 1.1 kW to 2.2 kW
- Available with helical, parallel shaft, or bevel gears
- Motor winding in Iso Class F with thermistors as standard
- Enclosure IP67 and IP69K with acid and alkali resistant coating as standard
- Motor connection through standard stainless steel plug connector in IP67
- Efficiency Classification IE2 / IE3

CleanDrive™



Geared motors for the Food & Beverage industry in enclosure IP66 with acid and alkali resistant coating as standard.

- Motor without fan and cooling fins
- Motor power 0.12 kW
- Motor winding in Iso Class F with thermistors as standard
- Motor connection through standard terminal box or stainless steel cable gland

CleanConnect®



Specially developed for the requirements of the beverage industry: Enclosure IP 67, gold coated contacts and smooth surface for a reliable current and signal transmission in wet environments.

- Cleaning friendly and detergent resistive surface
- Standardised M25 threaded connection
- Connectable without tools, coded for foolproof connection
- EMC conform due to shielding connection
- Available with straight or angular connection

Explosion-proof BAUER Geared Motors

Geared motors suitable for use in explosive areas:
GAS Zones 1, 2
DUST Zones 21, 22

- DXD Zone 1, II 2G Ex d(e) II C T4, 0.12… 90 kW
- DXE Zone 1, II 2G Ex e II T3, 0.12… 11 kW
- DXN Zone 2, II 3G Ex nA II T3, 0.03… 30 kW
- DXC Zone 21, II 2D Ex tD A21 IP65 T<160°C, 0.03… 30 kW
- DXC Zone 21, II 2D Ex tD A21 IP65 T120°C, 0.03… 11 kW
- DXS Zone 22, II 3D Ex tD II T<160°C, 0.03… 30 kW
- DXD Zone 1/21, II 2G Ex d(e) II C T4/II 2D Ex tD A21 IP65 T120°C, 0.12… 90 kW
- DXE Zone 1/21, II 2G Ex e II T3/II 2D Ex tD A21 IP65 T120°C, 0.12… 11 kW
- DXS Zone 2/22, II 3G Ex nA II T3/II 3D Ex tD II T<160°C, 0.03… 30 kW

1



	Page
Advantages for Bauer Geared Motors Bauer Geared Motors Bauer Gearboxes Bauer-Motors Bauer-Brakes	11-14

Bauer-Getriebemotoren

- Low operating costs due to a high total efficiency
- 2-stage gearbox concept gives a longer lifetime due to a reduced number of moving parts
- Lower servicing costs due to a modular system
- No additonal protective measures (e.g. dusty environment) through the IP65 enclosure as standard
- The electrical design of the motor is aligned to the gearbox
- Quick reaction time in emergency situations (Breakdowns etc.) through Fast Assembly Delivery (within 24 hours

Bauer Gearboxes

- Easy access to the fixation points reduces assembly times and installation costs
- Low servicing costs as the lubrication change results in normal duty with a lubrication temperature of approx. 80°C first after 15.000 operating hours when using CLP 220 or 25.000 operating hours when using PGLP 220 / PGLP 460.
- 2-stage gearbox concept reduces the spare part stocking
- A variety of attachment possibilities (Foot, Flange, Solid and Hollow shafts, Torque arms)
- Sealed housing design reduces the risk of oil leakage and increases the oil lifetime
- The large housing volume allows usage in very harsh environments

Bauer Motors

- Low operating costs due to high motor efficiencies (IE1, IE2 and IE3 as Standard)
- Low installation costs through CAGE CLAMP® instead of the classical terminal block connection
- A variety of additional designs (connectors, brakes, backstops, rain covers, forced cooling, encoders etc.)
- Cost reduction of connection cabling and avoidance of additional protective elements (chokes, filters etc.), through built-on inverters (ETA-K)
- Ideal for frequency inverter duty though insulation class F as standard

Bauer brakes

- Low servicing costs through long lifetime of the brake discs (without adjustment)
- Brake-Motor correlation tailor made to the application by virtue of on average three brake sizes per motor size
- A variety of designs (lockable and non-lockable hand release, microswitch, heaters)
- Robust design for heavy duty applications
- Enclosure IP65 as Standard
- Very high wear resistance

2



Page

Selection of geared motors 15-20
Safety Information
Cover of Rotating Parts
Contact Protection
Noise Behaviour
Coating and Corrosion Protection
Modular system overview

Installed positions of geared motors

Bauer geared motors can be supplied for any type of fitting position. Vertical installation positions (motor-down) place a particularly severe strain on the shaft seal. It is advisable to avoid this arrangement especially at high motor speeds (e.g. above 1800 r/min) and continuous operation

Notes on safety

See the notes on safety regarding installation in Operationg Indstructions.

Guards for rotating parts

The shrink disk (SSV) guards required under the German law relating to technical materials (Law Concerning Industrial Equipment - Equipment safety law GPSG) or by the Accident Prevention Regulations (UVV) are not included in the standard scope of supply because they are fitted by the customer in most cases, or the risk of accident can be eliminated by suitable installation.

See the Operationg Indstructions.

Protection against accidental contact

The D04LA and D05LA small motors have smooth motor housings. In the textile, pharmaceutical and foodstuffs industries in particular and in plant engineering, this IP54 version has a number of advantages over ribbed housings. In some instances, protection against accidental contact may have to be installed by the customer because for technical reasons, the surface temperatures of motors with smooth housings can be high, especially in continuous operation

Operating noise

The typical operating noise levels of BAUER geared motors are within the limits stipulated by VDI directive 2159 for gears and EN 60034-9, Table 2 for motors.

For physical reasons, low-ratio, high-speed gears produce more noise than medium- and high-ratio gears operating at low speeds.

See BAUER special imprint SD18.. for more information

Paint finish and corrosion protection

BAUER geared motors are spray-painted in RAL 7031 to DIN 1843 as standard. Other RAL colours are available at extra cost.

The output shafts are shipped in protective sleeves or with a protective coating to prevent corrosion.

If high requirements for corrosion resistance are required, the drives are available with enhanced corrosion protection: CORO 1, CORO 2, CORO 3 or CORO 4.

Paint finishes up to 200 µm in thickness are available on requestat extra cost. Thicker paint finishes for geared motors are impractical,because the paint tends to flake at the ribs and when the terminal box isopened.

2

Getriebeausführung

Motorausführung
Klemmenkästen

BG

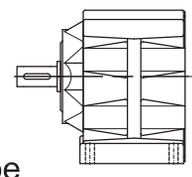

Stirnradgetriebe

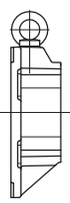

Systemdeckel

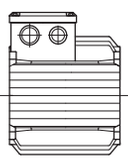

Motor mit angegossenem
Klemmenkasten (KAG)

BF

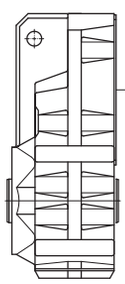

Flachgetriebe

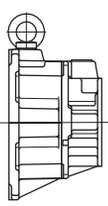

Vorstufe

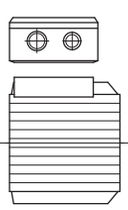

Motor mit angeschraubten
Klemmenkasten (TB)

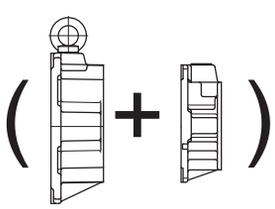

Vorstufe + Systemdeckel

BK

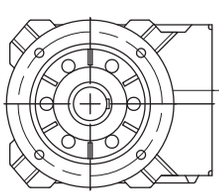

Kegelradgetriebe

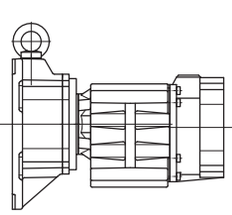

Zwischengetriebe

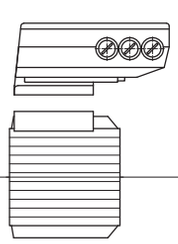

Motor mit ETA-K-Umrichter

BS

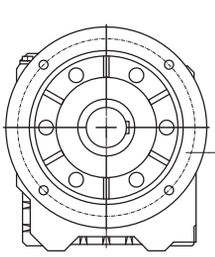

Schneckenradgetriebe

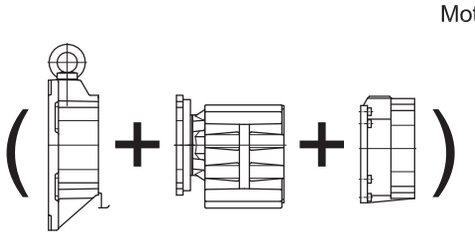

(Systemdeckel + Zwischengetriebe + Systemdeckel)

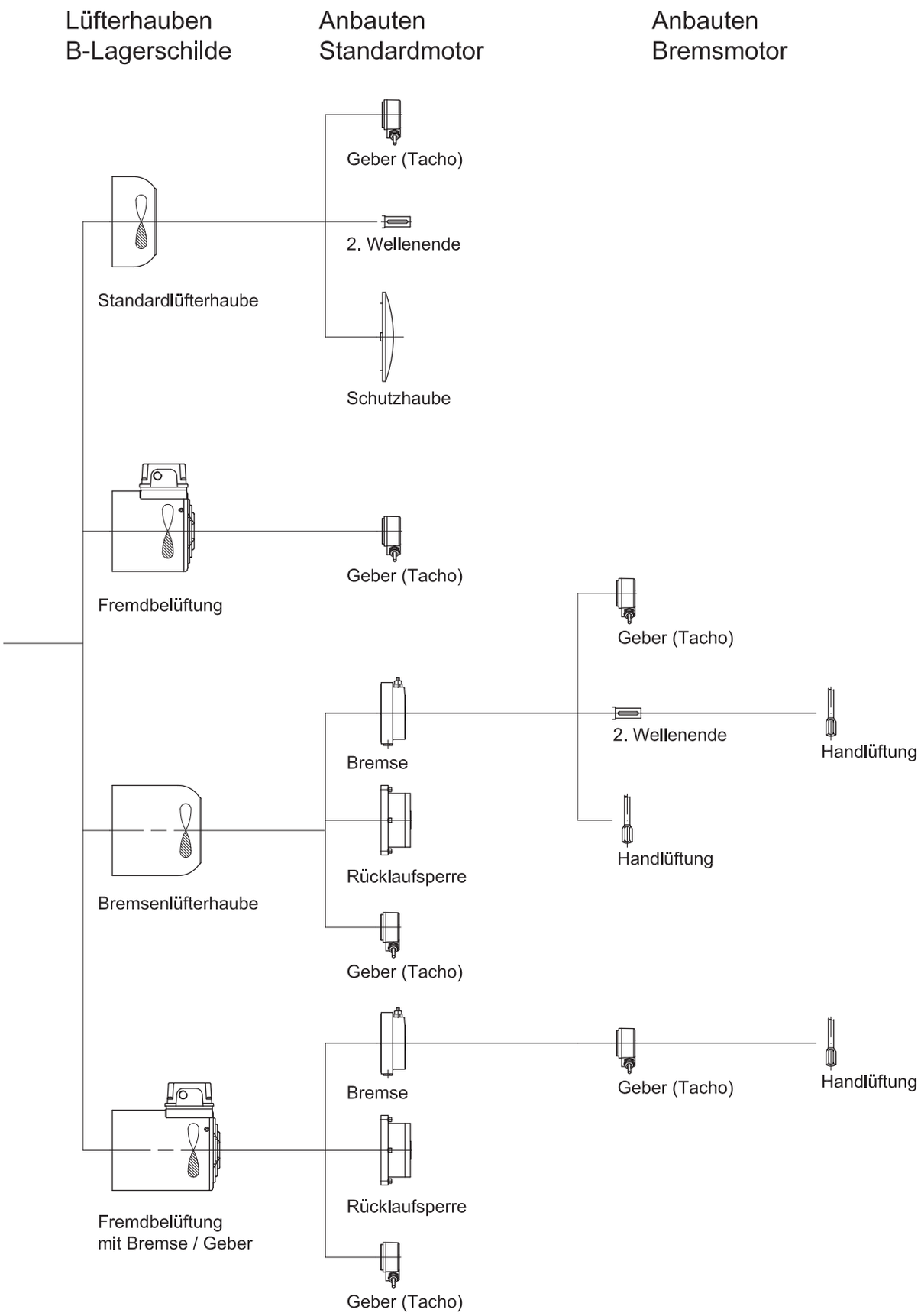
Lüfterhauben
B-Lagerschilde
Anbauten
Standardmotor
Anbauten
Bremsmotor
Geber (Tacho)
2. Wellenende
Standardlüfterhaube
Schutzhaube
Fremdbelüftung
Geber (Tacho)
Geber (Tacho)
Bremse
2. Wellenende
Handlüftung
Bremsenlüfterhaube
Rücklaufsperre
Handlüftung
Geber (Tacho)
Bremse
Geber (Tacho)
Handlüftung
Fremdbelüftung
mit Bremse / Geber
Rücklaufsperre
Geber (Tacho)

3

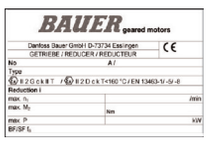

Page

Type Designations 21-30
Significance of type designation
BG-series helical-geared motor
BF-series shaft-mounted geared motor
BK-series bevel-geared motor
BS-series worm-geared motor
Description of the Designs
General Description

Type Designations

Significance of type designation

Bauer bevel-geared motor with brake and standard add-ons

Example: Bauer bevel-geared motor with brake and standard add-ons

Significance of type designation

The type designation of a BAUER geared motor is a code designating all the features in the drive configuration.

The build-up of the type designation is explained with the help of the following example of a bevel geared motor with brake and series options.

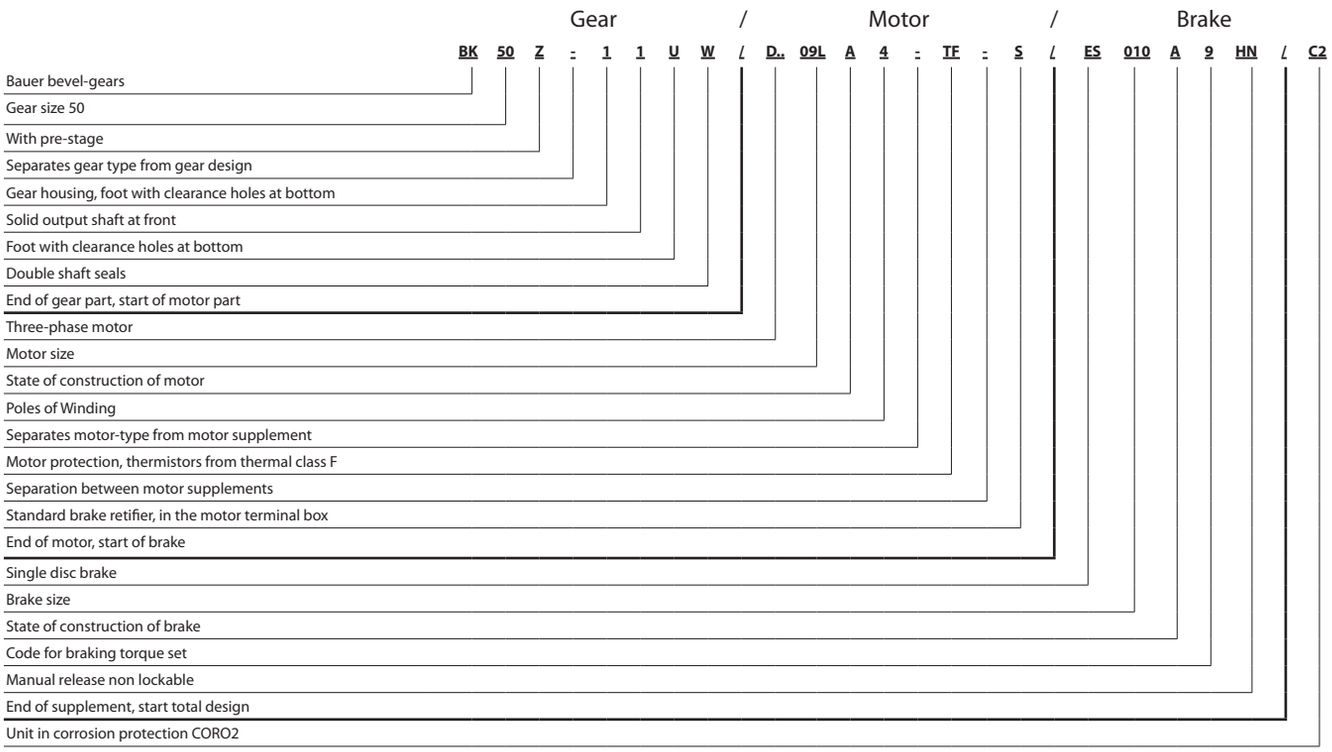

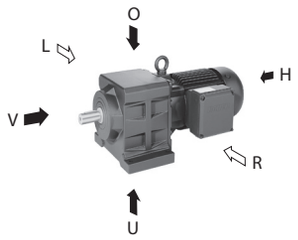

Getriebeart
Getriebegröße
Vorstufe
verstärkte Lagerung (nur BG10)
Kennziffer für Getriebeausführung
Kennziffer für Arbeitswellenausführung
Drehstrom
Motorgröße
Paketlänge
Konstruktionsstand
Polzahl

BG10 Z X-71 / D..08 LA4

Z-. . Getriebe mit Vorstufe
G-. . Doppelgetriebe

1 . Fuß mit Durchgangslöchern

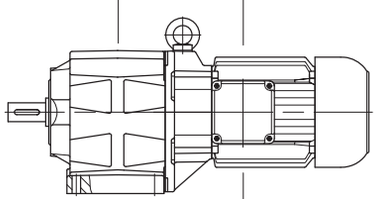

2 . kleiner A-Flansch mit Durchgangslöchern
3 . Standard A-Flansch mit Durchgangslöchern
4 . großer A-Flansch mit Durchgangslöchern

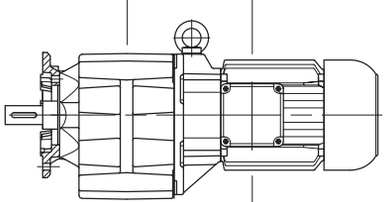

6 . L Fuß mit Gewindelöchern links
6 . R Fuß mit Gewindelöchern rechts
6 . LR Fuß mit Gewindelöchern links und rechts

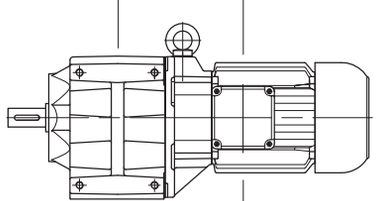

7 . C-Flansch mit Gewindelöchern
8 . allseitig bearbeitet

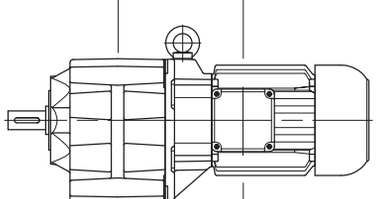

9 . L Fußplatte links
9 . R Fußplatte rechts
9 . LR Fußplatte links u. rechts

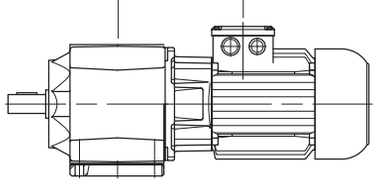

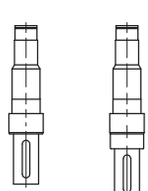

. 1 Zapfenwelle auf Getriebeseite V
. 7 Zapfenwelle auf Getriebeseite V für Flansch ab BG10

. . W doppelte Wellendichtung

Type Designations

BF-series shaft-mounted geared motor

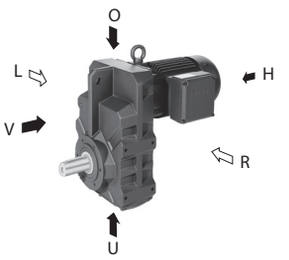

BF70 Z X-74 / D..11 LA4

- Getriebeart
- Getriebegröße
- Vorstufe
- verstärkte Lagerung (≥BF60)
- Kennziffer für Getriebeausführung
- Kennziffer für Arbeitswellenausführung
- Drehstrom
- Motorgröße
- Paketlänge
- Konstruktionsstand
- Polzahl

Z-.. Getriebe mit Vorstufe
X-.. Getriebe mit verstärkter Lagerung
G-.. Doppelgetriebe

0 . Drehmomentstütze angegossen

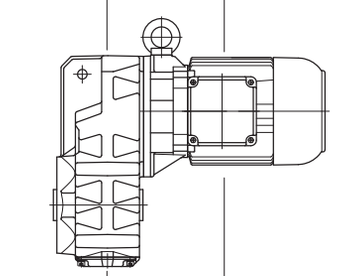

2 . kleiner A-Flansch mit Durchgangslöchern
3 . Standard A-Flansch mit Durchgangslöchern
4 . großer A-Flansch mit Durchgangslöchern

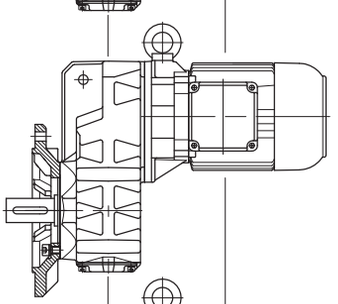

1 . LR Fuß mit Durchgangslöchern links u. rechts
6 . L Fuß mit Gewindelöchern links
6 . R Fuß mit Gewindelöchern rechts
6 . LR Fuß mit Gewindelöchern links u. rechts

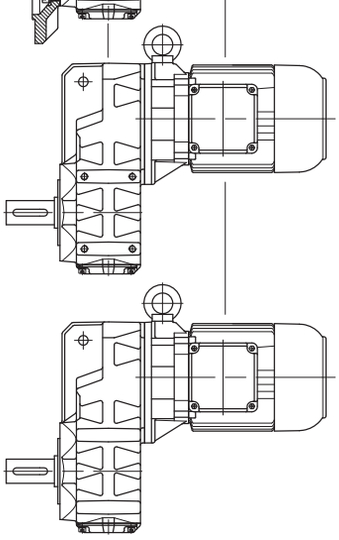

7 . C-Flansch mit Gewindelöchern
8 . allseitig bearbeitet

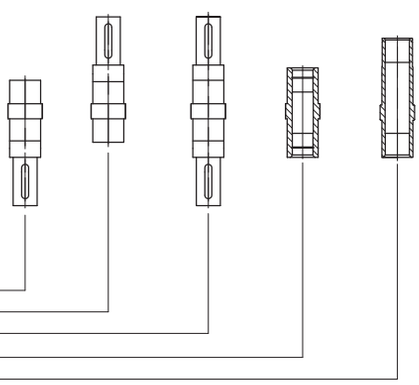

. 1 Zapfenwelle auf Getriebeseite V
. 2 Zapfenwelle auf Getriebeseite H
. 3 Zapfenwelle auf Getriebeseite V und H
. 4 Hohlwelle mit Paßfedernut
. 5 Hohlwelle für Schrumpfscheibe SSV

. . W doppelte Wellendichtung
. . A Abdeckung für Schrumpfscheibenverbindung SSV

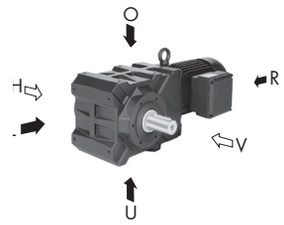

Getriebeart
Getriebegröße
Vorstufe
verstärkte Lagerung (≥BK20)
Kennziffer für Getriebeausführung
Kennziffer für Arbeitswellenausführung
Drehstrom
Motorgröße
Paketlänge
Konstruktionsstand
Polzahl

BK20 Z X-64U / D06 LA4

1 . U — Fuß mit Durchgangslöchern unten
1 . L — Fuß mit Durchgangslöchern links
1 . O — Fuß mit Durchgangslöchern oben

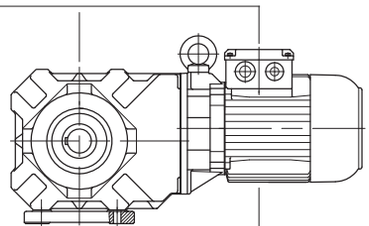

2 . V — kleiner A-Flansch mit Durchgangslöchern vorne
3 . V — Standard A-Flansch mit Durchgangslöchern vorne
4 . V — großer A-Flansch mit Durchgangslöchern vorne
. . H — A-Flansch hinten
. . VH — A-Flansch vorne und hinten

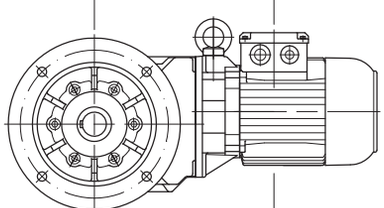

5 . V — Drehmomentstütze vorne
5 . VL — Drehmomentstütze vorne nach links
5 . VO — Drehmomentstütze vorne nach oben
5 . VU — Drehmomentstütze vorne nach unten
5 . HL — Drehmomentstütze hinten nach links
5 . HO — Drehmomentstütze hinten nach oben
5 . HU — Drehmomentstütze hinten nach unten

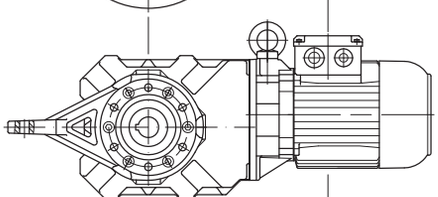

6 . U — Fuß mit Gewindelöchern unten
6 . L — Fuß mit Gewindelöchern links
6 . O — Fuß mit Gewindelöchern oben

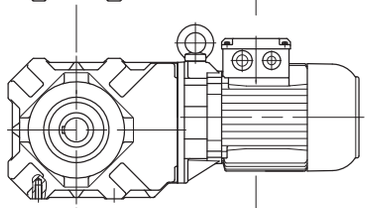

7 . V — C-Flansch mit Gewindelöchern vorne
7 . H — C-Flansch mit Gewindelöchern hinten
7 . VH — C-Flansch mit Gewindelöchern vorne und hinten
8 . — allseitig bearbeitet

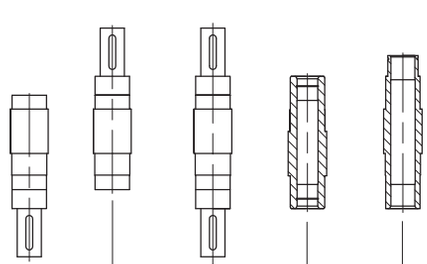

. 1 Zapfenwelle auf Getriebeseite V
. 2 Zapfenwelle auf Getriebeseite H
. 3 Zapfenwelle auf Getriebeseite V und H
. 4 Hohlwelle mit Paßfedernut
. 5 Hohlwelle für Schrumpfscheibe SSV auf Getriebeseite H
. . W doppelte Wellendichtung
. . A Abdeckung für Schrumpfscheibenverbindung SSV

Type Designations

BS-series worm-geared motor

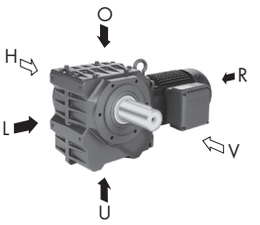

Getriebeart
Getriebegröße
Vorstufe
Kennziffer für Gehäuseausführung
Kennziffer für Arbeitswellenausführung
Drehstrom
Motorgröße
Paketlänge
Konstruktionsstand
Polzahl

BS40 Z-64U/ D..08 LA4

1 . U — Fuß mit Durchgangslöchern unten
1 . L — Fuß mit Durchgangslöchern links
1 . O — Fuß mit Durchgangslöchern oben

2 . V — kleiner A-Flansch mit Durchgangslöchern vorne
3 . V — Standard A-Flansch mit Durchgangslöchern vorne
4 . V — großer A-Flansch mit Durchgangslöchern vorne
. . H — A-Flansch hinten
. . VH — A-Flansch vorne und hinten

5 . V — Drehmomentstütze vorne
5 . VL — Drehmomentstütze vorne nach links
5 . VO — Drehmomentstütze vorne nach oben
5 . VU — Drehmomentstütze vorne nach unten
5 . HL — Drehmomentstütze hinten nach links
5 . HO — Drehmomentstütze hinten nach oben
5 . HU — Drehmomentstütze hinten nach unten

6 . U — Fuß mit Gewindelöchern unten
6 . L — Fuß mit Gewindelöchern links
6 . O — Fuß mit Gewindelöchern oben

7 . V — C-Flansch mit Gewindelöchern vorne
7 . H — C-Flansch mit Gewindelöchern hinten
7 . VH — C-Flansch mit Gewindelöchern vorne und hinten
8 . — allseitig bearbeitet

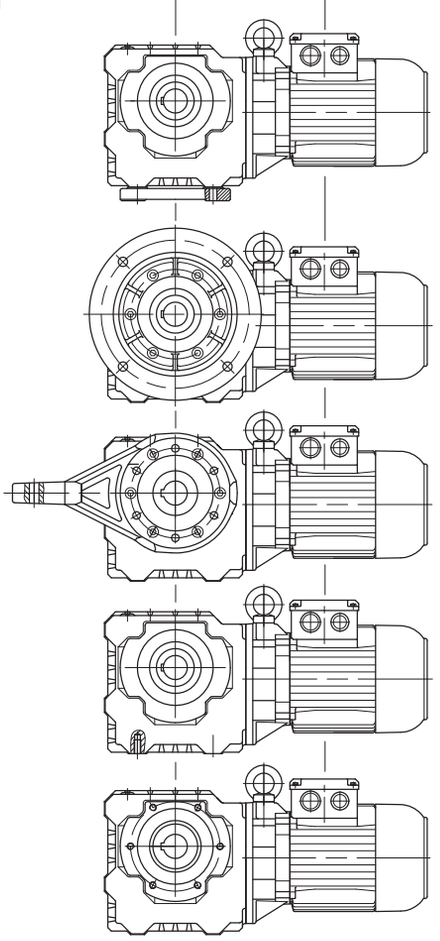

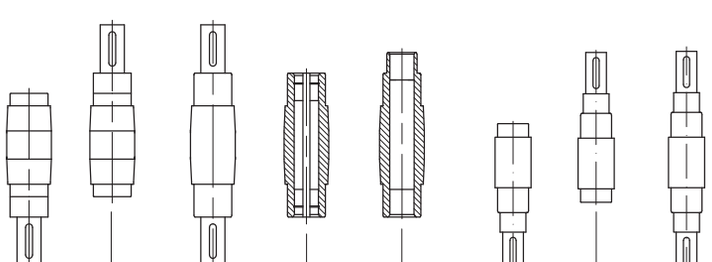

. 1 Zapfenwelle auf Getriebeseite V
. 2 Zapfenwelle auf Getriebeseite H
. 3 Zapfenwelle auf Getriebeseite V und H
. 4 Hohlwelle mit Paßfedernut
. 5 Hohlwelle für Schrumpfscheibe SSV
. 7 Zapfenwelle auf Getriebeseite V für Flansch (nur BS02 u. BS03)
. 8 Zapfenwelle auf Getriebeseite H für Flansch (nur BS02 u. BS03)
. 9 Zapfenwelle auf Getriebeseite V und H für Flansch (nur BS02 u. BS03)
. . W doppelte Wellendichtung ab BS10
. . A Abdeckung für Schrumpfscheibenverbindung SSV ab BS10

BG and BF series

BG series: type B3 BF series: type H4

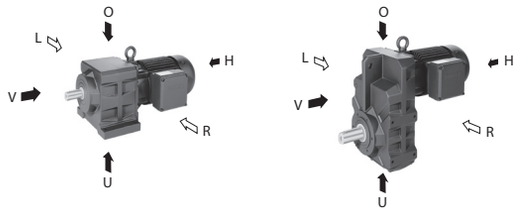

V = Front
The side of the gear unit facing away from the motor or the source of motive power

H = Rear
The side of the gear unit facing toward the motor or the source of motive power

L = Left
The left side of the gear unit as viewed from the output shaft side of type B3 for the BG series or type H4 for the BF series

R = Right
The right side of the gear unit as viewed from the output shaft side of type B3 for the BG series or type H4 for the BF series

BK and BS series

BK series: type H1 BS series: type H1

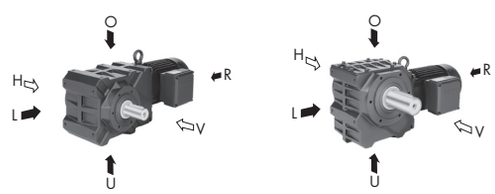

V = Front
The side of the gear unit facing toward the viewer looking toward the type H1 unit

H = Rear
The side of the gear unit facing away from the viewer looking toward the type H1 unit

L = Links
The left side of the gear unit as viewed from the output shaft side of type H1, or the torque brace oriented to the left

O = Top
The top side of the gear unit as viewed from the output shaft side of type H1, or the torque brace oriented upwards

U = Bottom
The bottom side of the gear unit as viewed from the output shaft side of type H1, or the torque brace oriented downwards

Type Designations

General construction

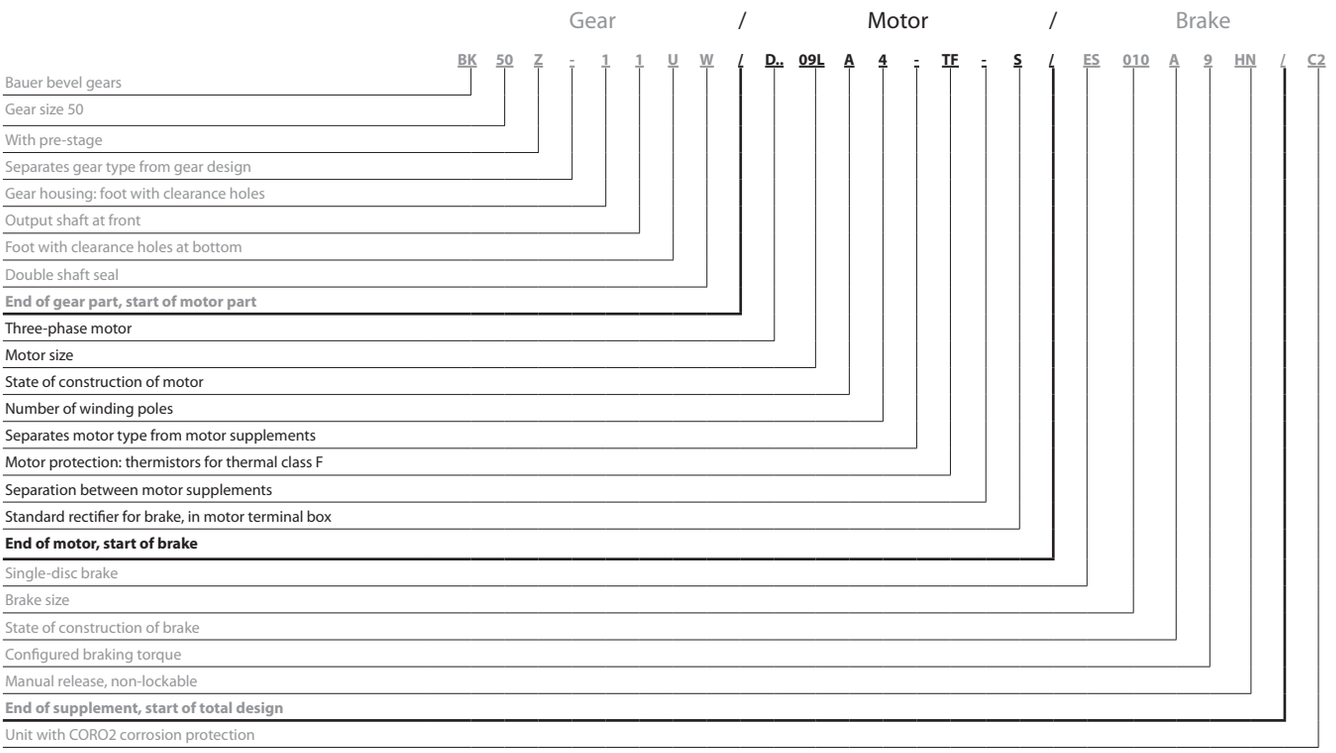

3

Three-phase motor

D		=	Three-phase motor
E		=	Single-phase motor (Steinmetz circuit)
.	A	=	Aseptic motor (germ-free drive)
.	SE	=	Three-phase motor with enhanced efficiency compliant with IE1
.	HE	=	Three-phase motor with enhanced efficiency compliant with IE2
.	PE	=	Three-phase motor with enhanced efficiency compliant with IE3
.	N	=	Motor without gear unit; foot-mount version
.	NF	=	Motor without gear unit; flange-mount version
.	R	=	Roller table motor
.	XE	=	Explosion-proof motor with increased safety
.	XD	=	Encapsulated
.	W	=	Torque motor
.	L	=	Special rotor for traction and slewing gear motors
.	C	=	With main and auxiliary windings; only with single-phase motors (EC....)
.	V	=	Multiple voltage ranges (wide voltage range)
.	U	=	Unventilated (no forced ventilation)

Motor protection

TB	=	Thermistor 140°
TF	=	Thermistor 160°
TH	=	Thermistor 180°
TEB	=	Thermistor warning/shutdown 120°/140°
TBF	=	Thermistor warning/shutdown 140°/160°
TFH	=	Thermistor warning/shutdown 160°/180°
TOB	=	Thermostatic switch, NC 140°
TOF	=	Thermostatic switch, NC 160°
TOH	=	Thermostatic switch, NC 180°
TSB	=	Thermostatic switch, NO 125°
TSF	=	Thermostatic switch, NO 160°
TSH	=	Thermostatic switch, NO 180°
TX	=	Other

Brake rectifier
in motor terminal box

S	=	Standard rectifier	SG
E	=	Special rectifier	ESG
M	=	Special rectifier	MSG

Plug connector	ST	= Harting (other)
Heavy-duty fan	SL	
Protective cover	D	
CleanDrive™	CD	= Aseptic drive with cable

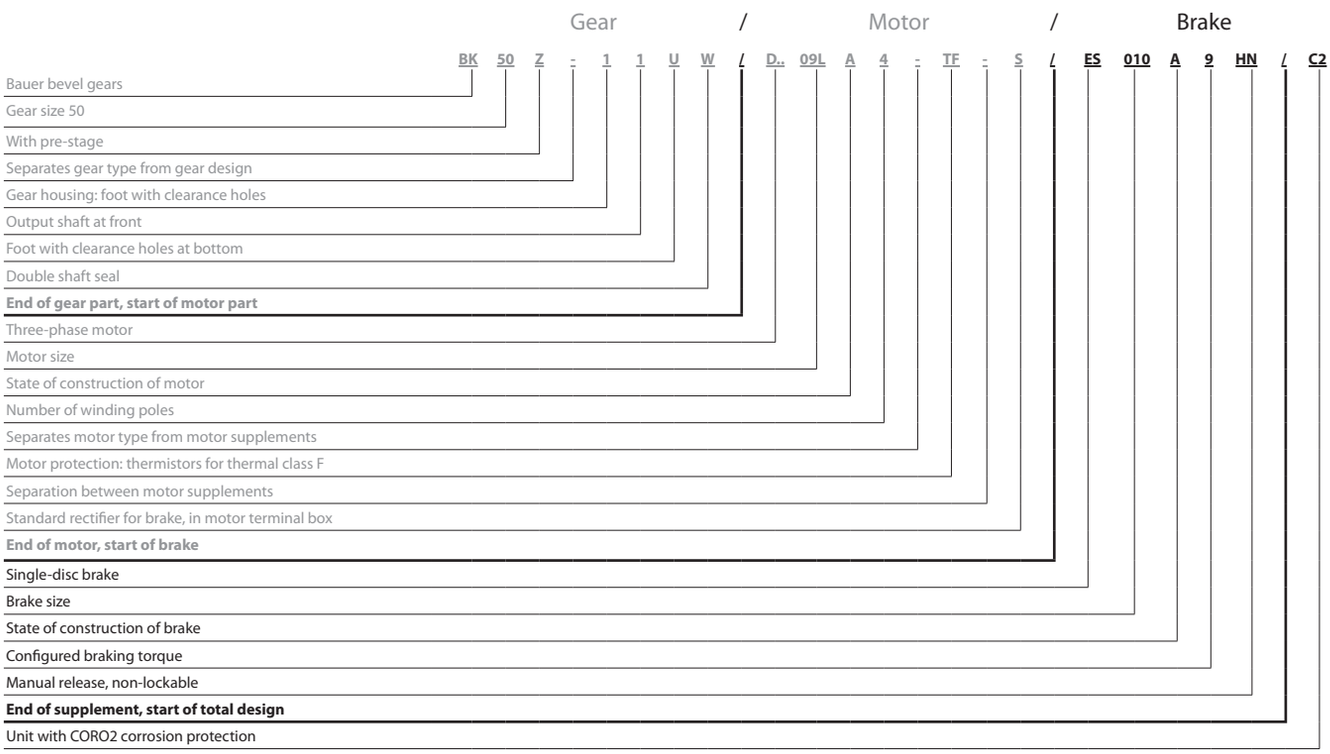

Brake

E		= Single-disc brake
ES		= Single-disc holding brake
ZS		= Two-disc holding brake
ESX		= Single-disc service brake
ZSX		= Two-disc service brake
… 010		= Brake size
… …	A	= Construction state
… …	. 9	= Code for configured braking torque
… …	. . HN	= Manual release (not lockable)
… …	. . HA	= Manual release (lockable)

Reverse rotation block

RR	= Blocking direction clockwise
RL	= Blocking direction anticlockwise

Digital and analogue encoder

G

Second shaft end

ZW	= With key
ZV	= With square shaft

Forced ventilation

FV

Overall design

AV	= USA/Canada version with shaft dimensions in inches
AM	= USA/Canada version with metric shaft dimensions
CS	= Canadian version
C1	= Coro1 corrosion protection
C2	= Coro2 corrosion protection
C3	= Coro3 corrosion protection
SP	= Non-catalogue version

4

BAUER
THE GEAR MOTOR SPECIALIST

Page

Geared Motor Selection **31-52**
Specification of geared motors
Drive configuration
Motor configuration
Radial and axial forces on the output shaft
Dimensioning based on efficiency
Shock loads of machinery

Gear Motor Selection

Selection of geared motors

RFQ data ☐ **Order** ☐ **Bauer GmbH**

Order / RFQ no.: _____ **Fax: +49 (0)711 3518 381**

Contact data: _____ **Email: info@danfoss-bauer.de**

Application: _____
(e.g. traction drive, hoist/lift drive, roller conveyor, feedscrew, etc.)

Gearbox type






BG ☐ BF ☐ BK ☐ BS ☐

4

Number of items _____
Efficiency class not IE ☐ E2 ☐ E3 ☐
Type _____
Power _____ kW
Output shaft speeds _____ 1/min
Torque _____ Nm Service facto f_B= _____
Mounting arrangement/
Type of installation _____ Terminal box position _____
RAL 7031 or special RAL shade _____
Corrosion prevention **Standard** or CORO1 / CORO2 / CORO3 _____
Rated voltage _____ V type of business _____
Frequency _____ Hz
Thermistors ☐ Thermostats ☐
Ambient temperature _____ °C Installation elevation [m] _____
Ambient conditions & installation site _____
Transmission component (direct, chain, gearwheel, belt, etc.) _____
Radial force on output shaft _____ N at a distance x from the shaft junction _____ mm
Axial force on output shaft _____ N

Operation with inverte
speeds of _____ 1/min to _____ 1/min Cutoff frequency _____ Hz
Integrated frequency converter ☐ Cabinet-mounted frequency converter ☐

Gear unit design
☐ Foot with clearance holes
☐ A-Flange with clearance holes D = _____ mm
☐ C-Flange with tappes holes
☐ Torque restraining arms with rubber buffers in L/T/B direction _____
☐ Foot with tapped holes on L/R/LR/T/B side _____

Arbeitswelle
☐ Solid shaft on F/B/FB end _____
☐ Hollow shaft
☐ Hollow shaft for shrink-on disk

Motor-mounted components
☐ brake
Type _____ Braking torque = _____ Nm
Supply voltage = _____ VAC _____ Hz or _____ V DC
manual release yes ☐ no ☐
Microswitch yes ☐ no ☐

☐ Encoder
incremental ☐
absolute ☐
Pulse count _____
Output signal HTL ☐ TTL ☐

☐ Forced ventilation
☐ Output shaft reverse rotation block (clockwise / anti-clockwise) _____

Special design features

_____

_____

Drive configuration

Motions are necessary in production plants and equipment for the manufacture of goods and products. Geared motors are used to implement these motions in stationary production equipment. The objective of drive configuration is to obtain the optimal motor for each type of motion.

Motions in machines and equipment vary considerably. Experienced design engineers reduce the necessary motions to a few standard types:

- continuous linear motion
- reciprocating linear motion
- horizontal linear motion
- vertical or oblique linear motion for lifting and lowering loads
- continuous rotary motion and reciprocating rotary motion

All motions can be divided into:

- an acceleration phase
- a constant-velocity phase
- a braking (deceleration) phase

These motion phases must be examined separately when dimensioning a drive, in order to determine the phase with the highest load. After the maximum load has been determined, the drive system can be selected.
See our separate "Design Guide" publication for assistance with various use cases.

Required data for drive configuration

In addition to the data on page 35 (Specification of geared motors), the following data is necessary for drive configuration:

Designation	Description	Unit
Z	Cycle rate	[1/h]
t_d	Operating time per day	[h]
t_a	Deceleration time	[s]
n_2	Output speed	[rpm]
n	Rated rotor shaft speed	[rpm]
J	Moment of inertia	[kgm^2]
J_{ext}	External moment of inertia	[kgm^2]
J_{ext}	External moment of inertia referred to the rotor shaft	[kgm^2]
J_{rot}	Rotor moment of inertia	[kgm^2]
F	Force	[N]
m	Mass	[kg]
v	Velocity	[m/s]
a	Acceleration	[m/s^2]
g	Earth gravitational constant	[m/s^2]
P_{dyn}	Dynamic power	[kW]
P_s	Static power	[kW]
P	Power	[kW]
M_2	Output torque	[Nm]
M_{zerf}	Required drive torque	[Nm]
M_N	Rated torque at rotor shaft	[Nm]
M_a	Deceleration torque	[Nm]
M_L	Braking or driving load torque	[Nm]
M_{gr}	Specific limiting torque of gearbox at gear ratio i	[Nm]
M_{Br}	Rated braking torque	[Nm]
i	Gear reduction ratio	
FI	Inertia ratio	

Drive configuration process

Motor configuration

Determining the motor power

The required power can generally be calculated as follows:

$$P = \frac{F \times v}{\eta}$$

As previously described, all motions are divided into an acceleration phase (dynamic power), a constant-velocity phase (static power), and a braking (deceleration) phase. Depending on the type of motion, the force F necessary to overcome all opposing forces such as rolling friction, linear friction, gravitational force, acceleration and so on arising from the drive train has a strong influence on the required power and must be determined explicitly for each use case.

See Section 15 for assistance in selecting the right motor power.

Determining the required torque

After the motor power has been determined, the required gearbox output torque can be calculated with:

$$M_2 = \frac{P \times 9550}{n_2}$$

Determining the gear reduction ratio

The gear reduction ratio is the ratio of the rated speed of the motor (see the motor data in Section 15) to the desired output speed of the geared motor.

$$i = \frac{n}{n_2}$$

Gearbox size selection

Determining the inertia ratio

The inertia ratio is the ratio of the sum of the moments of inertia of all masses driven by the motor and converted to the motor speed, including the moment of inertia of the motor rotor, to the moment of inertia of the rotor:

$$FI = \frac{J_{ext'} + J_{rot}}{J_{rot}} \qquad \text{where} \qquad J_{ext'} = \frac{J_{ext}}{i^2}$$

Determining the shock load

The shock load (see Sections 6, 7, 8 and 9) is determined from the inertia factor, the type of transmission component and the relative moment of acceleration.

Determining the minimum service factor f_{Bmin}

Based on the operating time per day, the cycle rate and the ascertained shock load, the service factor f_{Bmin} can be taken from the tables in Sections 6, 7, 8 and 9.

Based on this minimum service factor f_{Bmin}, select a geared motor from the tables that has a higher service factor as well as the required output speed, output torque and motor power.

Note: The service factor relates solely to the required torque for static operation needed by the application, which should be covered by the output torque of the selected geared motor.
The dynamic portion is not taken into consideration here.

The actual service factor of the geared motor with regard to required torque for static operation can therefore be calculated as follows:

$$f_B = \frac{M_{gr}}{M_{2erf}}$$

The final step is to specify the accessory options for the geared motor.

Brake specification

Essentially it is necessary to determine, based on the amount of friction energy to be dissipated by the brake, whether the brake is a holding brake or a service brake.
See Section 16 for the definitions of holding brakes and service brakes.

Once all the necessary data and requirements are known, the required braking torque can be calculated as follows:

$$M_{br} = M_a \pm M_L$$

$$M_a = \frac{J \times n}{9{,}55 \times t_a}$$

If the specific application data is not known, for horizontally driven equipment we recommend selecting a braking torque that is 1.0 to 1.5 times the rated torque of the motor.

In the case of applications with significant external moments of inertia (FI greater than 2) and with [?] operating cycles per hour, the brake size must always be selected on the basis of the thermally allowable braking energy. See Section 16 for detailed information on brake configuration.

In the case of lifting equipment, for safety reasons a braking torque twice as large as the rated torque of the motor should always be selected.

4

Torque–speed characteristic

The torque versus speed curve shows the operating characteristics of the asynchronous motor. The reference points shown schematically on the torque versus speed curve are significant criteria for motor selection.

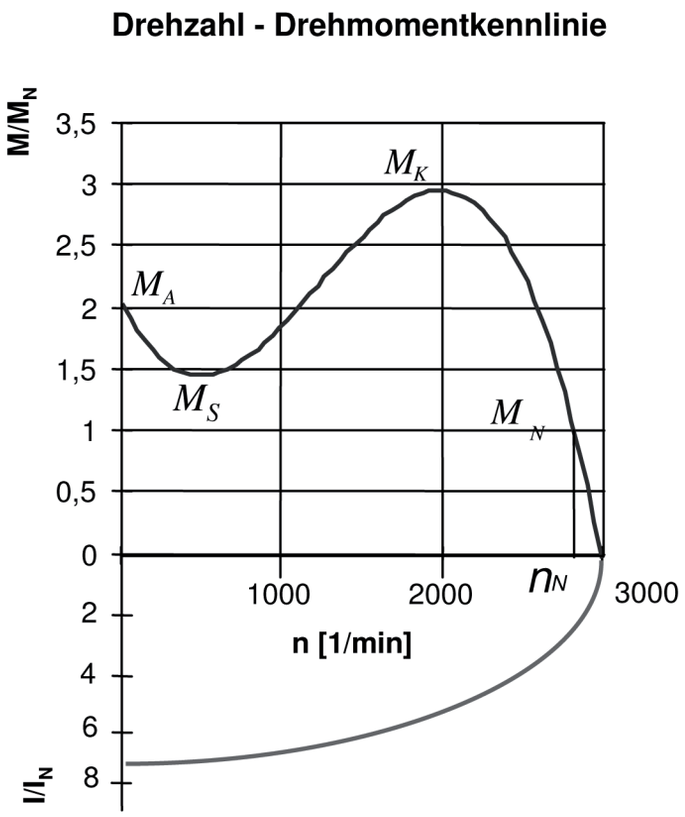

The **starting torque M_A** with the rotor stationary, which is also called the locked-rotor torque, determines the acceleration of the equipment or system. If the motor is powered directly from the mains, bear in mind that the starting torque, usually listed in the motor data tables in the form of the ratio M_A/M_N, is a fixed and unalterable quantity. This means that the desired acceleration can only be approximated when the motor is operated directly from the mains. Operation from a frequency converter is discussed separately.

The **pull-up torque M_S** is the least amount of torque developed by the motor while it is coming up to speed. It must always be greater than the effective load torque at the time when the pull-up torque occurs, as otherwise it will not be possible to accelerate the drive.

The **breakdown torque M_K** is the maximum torque the motor is capable of producing. If the load increases above the rated torque M_n, the slip s increases, the speed n decreases, and the motor delivers more torque. This can rise to a maximum level M_K. After this point the motor stalls, which means that it suddenly stops running at this slip value (breakdown slip). If the breakdown torque is exceeded, either the load must be removed or the motor must be switched off immediately. Otherwise the motor will be destroyed as a result of overheating.

The **rated torque M_N** is the torque available in continuous operation at the rated power P_N and rated speed n_N.

Dynamic power

The dynamic power is the power that accelerates the entire system, which consists of the load, transmission components, gearbox and motor.

$$P_{dyn} = \frac{m \times a \times v}{\eta}$$

P_{dyn}	Dynamic power [W	]
m	Mass [kg]	
a	Acceleration [m/s^2]	
v	Velocity [m/s]	
η	Efficiency	

Static power

The static power includes all forces present under zero-acceleration conditions. This includes rolling friction, linear friction, lifting force (with lifting) and wind force, among others.

$$P_S = \frac{F_F \times v}{\eta}$$

P_S	Static power [W]
F_F	Travel resistance [N]

Total power P_G

$$P_G = P_{dyn} + P_S$$

$$P_G = \frac{m \times a \times v}{\eta} + \frac{F_F \times v}{\eta}$$

Horizontal motion, rotary motion and vertical motion upwards	
Start-up time [s]	$t_A = \frac{\left(J_M + \frac{J_{ext}}{\eta}\right) \times n_M}{9{,}55 \times \left(M_A - \frac{M_L}{\eta}\right)}$
Cycle rate [c/h]	$Z = Z_0 \times \frac{1 - \left(\frac{M_L}{M_A \times \eta}\right)}{\left(\frac{J_S + \frac{J_{ext}}{\eta} + J_M}{J_M}\right)} \times K_L$
Vertical motion downwards	
Start-up time [s]	$t_A = \frac{\left(J_M + \frac{J_{ext}}{\eta}\right) \times n_M}{9{,}55 \times \left(M_A - (M_L \times \eta)\right)}$
Cycle rate [c/h]	$Z = Z_0 \times \frac{1 - \left(\frac{M_L \times \eta}{M_A}\right)}{\left(\frac{J_S + J_M + (J_{ext} \times \eta)}{J_M}\right)} \times K_L$

Gear Motor Selection

Motor configuration

Motor selection

Example:

Required dynamic torque at motor (for acceleration):	126 Nm
Required static torque at motor	70.0 Nm
Total torque at motor:	196 Nm

IE2

P_N [kW]	Type	n_N [rpm]	M_N [Nm]	I_N 400 V [A]	cos φ	η (100% load) [%]	η (75% load) [%]	η (50% load) [%]	I_A/I_N	M_A/M_N	M_S/M_N	M_K/M_N	J_{rot} [kgm²]
7,5	DHE13LA4	1460	49	15,1	0,81	88,9	89,2	87,9	7,0	3,3	3,0	3,5	0,0345
9,5	DHE16MA4	1470	62	19,7	0,78	89,4	89,4	86,5	6,8	2,9	2,5	3,2	0,057
11	DHE16LA4	1470	71	22,5	0,78	90,3	90,0	88,3	7,9	3,5	2,9	3,8	0,076
15	DHE16XA4	1470	97	31	0,77	90,6	90,8	88,8	7,2	3,2	2,8	3,5	0,087
18,5	DHE18LA4	1470	120	35	0,83	91,5	91,7	90,0	7,9	3,6	3,0	3,3	0,160

IE1

P_N [kW]	Type	n_N [rpm]	M_N [Nm]	I_N 400 V [A]	cos φ	η (100% load) [%]	η (75% load) [%]	η (50% load) [%]	I_A/I_N	M_A/M_N	M_S/M_N	M_K/M_N	J_{rot} [kgm²]
7,5	DSE13MA4	1440	50	15,3	0,81	87,5	87,8	87,1	6,2	2,8	2,5	3,2	0,02900
9,5	DSE13LA4	1440	63	19,2	0,82	87,1	87,5	87,5	6,0	2,9	2,6	3,0	0,03450
11	DSE16MA4	1460	72	22,6	0,81	87,7	88,0	87,3	6,0	2,5	2,1	2,7	0,05700
15	DSE16LA4	1460	98	29,5	0,83	88,9	89,2	88,9	6,1	2,5	2,1	2,8	0,07600
18,5	DSE16XA4	1460	121	37,5	0,81	89,3	89,9	88,5	6,1	2,6	2,2	2,8	0,08700

Due to the significantly higher starting torque (M_A) of IE2 motors (M_A/M_N 3.5) compared to IE1 motors (M_A/M_N 2.5), an 11 kW with an IE2 motor can be used in this case. Otherwise the 15 kW IE1 should be selected.

Selected
motor: 11.0 kW
IE1: DSE16MA4
IE2: DHE16LA4

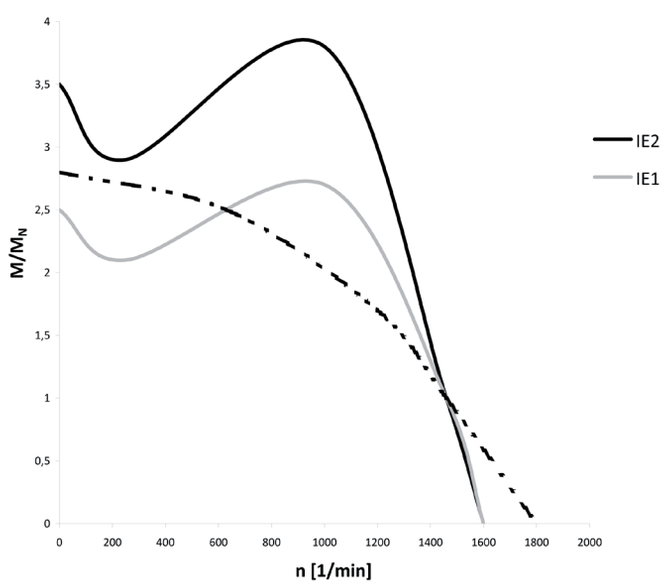

No-load cycle rate Z_0

If the cycle rate is greater than normal (typically around 60 cycles per hour), the additional thermal load and, depending on the type of power transmission, the additional mechanical load must be taken into account in motor selection.
The no-load cycle rate Z_0 is the number of start cycles per hour with the motor running under no load (no external moments of inertia) in which the allowable winding temperature for the insulating material class F is reached.

No-load cycle rate Z_0:

P_N [kW]	Type	Z_0 [c/h]
0,37	DHE08MA4	27000
0,55	DHE08LA4	19000
0,75	DHE08XA4	15000
1,1	DHE09LA4	11000
1,5	DHE09XA4	8700
2,2	DHE09XA4C	6400
3	DHE11MA4	5000
4	DHE11LA4	4000
5,5	DHE11LA4C	3100
7,5	DHE13LA4	2400
9,5	DHE16MA4	2000
11	DHE16LA4	1800
15	DHE16XA4	1400
18,5	DHE18LA4	1200
22	DHE18XA4	1000
30	DHENF20LG4	790
37	DHENF22SG4	670
45	DHENF22MG4	570
55	DHENF25MG4	490
75	DHENF28MG4	380

As a result of external loads, the no-load cycle rate is reduced to the allowable service cycle rate. The effect of the load is expressed by the inertia ratio FI and the load factor K_L.

4

Load factor K_L

The load factor reflects the relative load *P/PN* and the duty cycle of the motor in operation between the cycles.
The relative load has a quadratic effect on the allowable cycle rate. The effect of the duty cycle depends on the circumstances. With little or no load, the stress on the motor decreases due to the relatively long cooling periods, while at rated load or heavy loading the stress on the motor increases due to load losses.

The load factor K_L for 4-pole motors is determined as follows:

$$K_{L100} = 1 - \left(\frac{P}{P_n} \right)^{1,5}$$

$$K_L = 0,35 + (K_{L100} - 0,25) \times ED$$

Radial and axial forces on the output shaft

Radial and axial forces on the output shaft

For each geared motor with a solid shaft, the allowable radial force $F_{R\,(N,V)}$ referred to the centre of the output shaft, x = l/2, is listed in the selection tables. The listed data applies to both foot-mounted and flange-mounted versions. If the force application point F_X is off centre, the allowable radial force must be recalculated taking into account the bearing lifetime and the shaft strength.

Maximum allowable radial force at force application point X

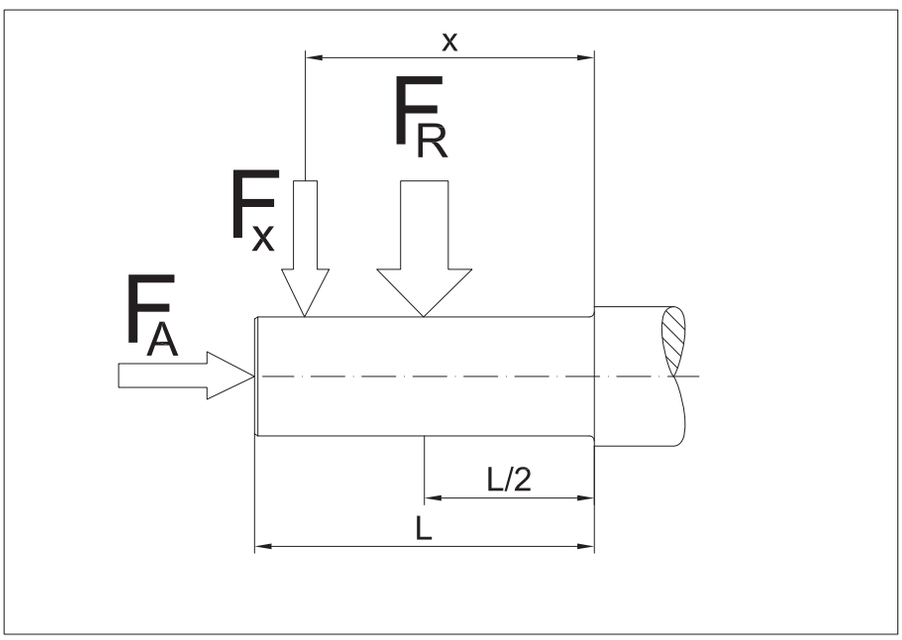

$F_{R(N,V)}$	Allowable radial force (x = l/2) according to the selection tables [N]
X	Distance from shaft junction to the force application point [mm]
F_A	Axial force [N]

To evaluate the radial force present at the force application point X, the allowable radial forces at position X must be determined with respect to the load limits of the bearings and the shaft strength.

If the calculated allowable radial forces at the force application point X are greater than the radial force that is present, the gearbox may be selected for the application.
If the calculated values are not sufficient or the force application point X is not within the stub shaft length l, please consult us.

Bearing load limit

$$F_{XL1} = F_q \times \frac{0{,}5 + b}{\left(\frac{X}{l} + b\right)}$$

$$F_{XL2} = F_q \times \frac{0{,}5 + a}{\left(\frac{X}{l} + a\right)}$$

Shaft strength

$$F_{XW1} = F_{qmax} \times \frac{0{,}5}{\left(\frac{X}{l}\right)}$$

$$F_{XW2} = F_{qmax} \times \frac{0{,}5 + c}{\left(\frac{X}{l} + c\right)}$$

For the selected gear ratio and bearing type (normal or reinforced), F_q is the allowable perpendicular force F_{RN} or F_{RV} from the geared motor selection tables.

F_{qmax} is the maximum allowable perpendicular force for the selected gearbox size as listed in the geared motor selection tables, independent of the bearing type (normal or reinforced).

The factors a, b and c for the individual gearbox types are listed in the following tables.

Spur gear unit BG series

Frame size	Bearings	Output shaft code	l	a	b	c
BG04	Normal	-.1	24	0,5625	1,5	-
BG05	Normal	-.1	28	0,5893	1,3929	-
BG06	Normal	-.1	30	0,6667	1,4167	-
BG10	Normal	-.1	40	0,7125	1,6750	-
		-.7		1,1000	2,0625	-
BG20	Normal	-.1	50	0,6100	2,2500	-
		-.7		0,9400	2,5800	-
BG30	Normal	-.1	60	0,5917	2,1750	-
		-.7		0,9417	2,5250	-
BG40	Normal	-.1	60	0,6917	2,3667	-
		-.7		1,0083	2,6833	-
BG50	Normal	-.1	80	0,5625	2,0000	-
		-.7		0,8563	2,2938	-
BG60	Normal	-.1	100	0,5300	2,0200	-
		-.7		0,7650	2,2550	-
BG70	Normal	-.1	120	0,4750	1,7292	-
		-.7		0,7292	1,9833	-
BG80	Normal	-.1	140	0,4286	1,7000	-
		-.7		0,6000	1,8714	-
BG90	Normal	-.1	200	0,3675	1,5300	-
		-.7		0,5825	1,7450	-
BG100	Normal	-.1	220	0,3477	1,4341	-
		-.7		0,5386	1,625	-

Radial and axial forces on the output shaft

Shaft-mounted gear unit BF series

Frame size	Bearings	Output shaft code	l	a	b	c
BF06	Normal	-.1	50	0,4500	1,4100	-
BF10	Normal	-.1	60	0,5083	1,4833	-
		-.2		0,6500	1,6250	-
BF20	Normal	-.1	70	0,4286	1,3571	-
		-.2		0,5571	1,4857	-
BF30	Normal	-.1	80	0,3875	1,2563	-
		-.2		0,5688	1,4375	-
BF40	Normal	-.1	100	0,4050	1,2250	-
		-.2		0,5250	1,3450	-
BF50	Normal	-.1	120	0,3125	1,0625	-
		-.2		0,3959	1,1458	-
BF60	Normal	-.1	140	0,3286	1,0821	-
		-.2		0,4036	1,1571	-
	Reinforced	-.1		-	-	0,2750
		-.2		-	-	0,3643
BF70	Normal	-.1	180	0,2722	1,0566	-
		-.2		0,3056	1,0889	-
	Reinforced	-.1		-	-	0,2194
		-.2		-	-	0,2639
BF80	Normal	-.1	220	0,2878	1,3536	-
		-.2		0,2873	1,3518	-
	Reinforced	-.1		-	-	0,2364
		-.2		-	-	0,2268

Bevel gear unit BK series

Frame size	Bearings	Output shaft code	l	a	b	c
BK06	Normal	-.1	40	0,4375	1,9875	-
		-.2		0,4375	1,9875	-
		-.7		0,9125	2,4625	-
		-.8		0,9125	2,4625	-
BK10	Normal	-.1	60	0,5917	2,2417	-
		-.2		0,5917	2,2417	-
BK20	Normal	-.1	70	0,5071	2,2357	-
		-.2		0,5071	2,2357	-
	Reinforced	-.1		-	-	0,3929
		-.2		-	-	0,3929
BK30	Normal	-.1	80	0,5250	2,2750	-
		-.2		0,5250	2,2750	-
	Reinforced	-.1		-	-	0,4125
		-.2		-	-	0,4125
BK40	Normal	-.1	100	0,4300	2,1700	-
		-.2		0,4300	2,1700	-
	Reinforced	-.1		-	-	0,3400
		-.2		-	-	0,3400
BK50	Normal	-.1	120	0,4083	1,9417	-
		-.2		0,4083	1,417	-
	Reinforced	-.1		-	-	0,3250
		-.2		-	-	0,3250
BK60	Normal	-.1	140	0,3536	1,8036	-
		-.2		0,3536	1,0836	-
	Reinforced	-.1		-	-	0,3121
		-.2		-	-	0,2979
BK70	Normal	-.1	180	0,2861	1,6694	-
		-.2		0,2861	1,6694	-
	Reinforced	-.1		-	-	0,2428
		-.2		-	-	0,2317
BK80	Normal	-.1	220	0,2818	1,5545	-
		-.2		0,2818	1,5545	-
	Reinforced	-.1		-	-	0,2305
		-.2		-	-	0,2214
BK90	Normal	-.1		0,2519	1,6096	-
		-.2		0,2519	1,6096	-
	Reinforced	-.1		-	-	0,1989
		-.2		-	-	0,1912

Radial and axial forces on the output shaft

Worm gear unit BS series

Frame size	Bearings	Output shaft code	l	a	b	c
BS02	Normal	-.1	30	0,6	2,1	-
		-.2		-	-	-
		-.7		1,3333	2,8333	-
		-.8		-	-	-
BS03	Normal	-.1	40	0,4375	1,9875	-
		-.2		-	-	-
		-.7		0,9125	2,4625	-
		-.8		-	-	-
BS04	Normal	-.1	40	0,5375	1,7875	-
		-.2		-	-	-
BS06	Normal	-.1	50	0,4800	1,9400	-
		-.2		-	-	-
BS10	Normal	-.1	60	0,5917	2,3083	-
		-.2		-	-	-
BS20	Normal	-.1	70	0,5500	2,4357	-
		-.2		-	-	-
BS30	Normal	-.1	80	0,5312	2,4313	-
		-.2		-	-	-
BS40	Normal	-.1	120	0,4292	1,7042	-
		-.2		-	-	-

Transmission components

If a transmission component is used (gearwheels, chainwheels, V-belt, etc.), the resulting radial forces can be determined as follows.

$$F_R = \frac{2000 \times M}{D_T} \times f_Z \leq F_{R(N,V)}$$

F_R Radial force [N]
M Torque [Nm]
D_T Pitch radius of the transmission component [mm]
f_Z Safety factor

A safety factor f_Z depending on the type of transmission component attached to the output shaft must be included when determining the value of the radial force FR that is present.

Factor f_z for the type of transmission component

Transmission component	Safety factor f_z	Note
Gearwheel	1	= > 17 teeth
Gearwheel	1,15	< 17 teeth
Chainwheel	1	= > 17 teeth
Chainwheel	1,25	< 17 teeth
Toothed rack	1,15	< 17 teeth (pinion)
V-belt	2……2,5	From tensioning force
Flat belt	2….3	From tensioning force
Friction wheel	3….4	

Axial force

The following specification applies to the allowable axial force FA on the output shaft (either tension or compression) for all Bauer geared motors and for foot, flange or hollow-shaft versions:

$$F_A = 0{,}5 \times F_{R(N,V)}$$

Please consult us in case of larger axial forces.

Drive configuration based on efficiency

With the introduction of the IEC 60034-30 standard and the ErP 2009/125/EC EU directive, utilisation of the potential energy savings in industrial environments has been given increased urgency and made legally mandatory.
In the industrial applications area, electric motors consume the vast majority of electrical energy (approximately 70%). They are used in all areas and in many applications, such as fans, pumps, grinders, rolling mills, lifts, transport and conveying equipment, household appliances, and office machines.
Due to this broad range of applications, electrical drive systems are a primary target for energy saving policies. As electric motors consume a large amount of electrical energy, even small improvements in efficiency lead to significant savings.
In many cases, especially in transport and conveying equipment, it is necessary to reduce the speed of a three-phase squirrel-cage motor. This can be done by using external traction gearboxes or by using external or integrated reduction gearboxes. With regard to energy savings, the efficiency of the gear unit and transmission components must not be ignored.

The overall efficiency of a system is calculated as follows:

$$\eta_{System} = \eta_{Motor} \times \eta_{Getriebe} \times \eta_{Anlage}$$

Savings potential Motor: η_{motor}

In accordance with the Motor Regulation 16640/2009/EC, the legally binding EU ErP directive 2009/125/EC specifies IE2 (High Efficiency) as the minimum efficiency for new motors operating in continuous running duty (S1), effective 16 June 2011.

The right motor frame size and motor type should be selected based on environmental and economical aspects based on the new motor regulations for the IE2 series.

Environmental analysis

Motor capacity utilisation is a particularly important factor in the energy utilisation of motors.

Unlike what is often incorrectly assumed, energy consumption cannot be reduced by simply replacing a motor operating at only 50% of its capacity with a smaller motor operating at 100% of its capacity. Partially loaded motors dissipate less heat and therefore achieve higher efficiency.

The following table shows the comparative technical data of 2.2-kW motors with copper and aluminium rotors and a 1.1-kW motor with an aluminium squirrel-cage rotor.

P_N [kW]	Type	n_N [rpm]	M_N [Nm]	I_N 400 V [A]	cos φ	η (100% load) [%]	η (75% load) [%]	η (50% load) [%]	I_A/I_N	M_A/M_N	M_S/M_N	M_K/M_N	J_{rot} [kgm²]
1.1	DHE09LA4	1440	7.3	2.5	0.75	82.7	82.3	79.8	5.9	2.9	2.7	3.4	0.0032
2.2	DHE09XA4C	1440	14.5	4.75	0.79	84.5	85.0	83.5	5.2	1.8	1.7	2.7	0.0053
2.2	DHE11SA4	1440	14.5	4.6	0.80	86.2	86.0	84.7	7.0	3.1	2.8	3.6	0.0081

Even with 50% capacity utilisation, the two 2.2-kW motors have higher efficiency than the fully utilised (100% load) 1.1-kW motor.
Thanks to the large thermal margins of IE2 motors, there is no need for additional safety margins in design parameters.
However, with very high cycle rates the higher starting torque of IE2 motors, and the associated higher gear acceleration loads, should be taken into account.
See separate publication EP34 for additional information.

Calculation of the efficiency under partial load

The motor data sheets list motor efficiency figures according to Motor Regulation 640/2009/EC for operation at several load levels (50%, 75% and 100%).
The efficiency at any partial load point can be calculated approximately from the efficiency figures for 75% and 100% load, and the energy balance of the application can be evaluated accordingly.

$$R_{VL} = \frac{\left(\frac{100}{\eta_{100}} - 1\right) - 0{,}75 \times \left(\frac{100}{\eta_{75}} - 1\right)}{0{,}4375}$$

$$R_{VO} = \left(\frac{100}{\eta_{100}} - 1\right) - R_{VL}$$

$$\eta_P = \frac{100}{\left(1 + \frac{R_{VO}}{p}\right) + R_{VL} \times p}$$

with

η_{100}	Efficiency at 100% load
η_{75}	Efficiency at 75% load
RVL, RVO	Intermediate results
p	Partial load (value range: 0 to 1 or overload)
η_P	Efficiency at partial load point p

Economic analysis

As described above, the economic analysis does not permit especially large safety factors. The energy savings required by the ErP Directive 2009/125/EC can be achieved very easily with electric motors, but there is a price attached.
With the change from IE1 to IE2 efficiency class (effective 16 June 2011) for mains-powered motors operating in S1 duty, users of electric motors are faced with power-dependent additional costs when purchasing these products.
The drive should essentially be selected based on the investment payback time as a function of the period under consideration.
Operating a 2.2-kW motor constantly at 50% load (as described above) does not make sense from an economic perspective. In this case, an additional amount must be paid for changing to a different frame size or package length and for material expenditures with IE2 motors. As a result, the investment payback time of the motor will extend longer into the lifetime of the system.

Consequently, the most cost-effective motor selection must be based on the following factors.

- Duty type
  Evaluate the application, since most applications do not operate with S1 duty type.
- Operating time
  The longer the operating time, the shorter the payback time.
- Motor capacity utilisation
  Motor utilisation 75% or higher load.
- Additional financial expenditure
  Safety factors increase the economic overhead.
- Payback time

Gear efficiency η_{gear}

Comparison of the general savings potential of gearboxes and motors in continuous running duty (S1) shows that the energy savings potential of gearboxes is significantly higher than that of motors. The efficiency of gearboxes is predominantly dependent on the tooth geometry and the friction values of the bearings and seals. At high input speeds and with vertical designs in which the first stage rotates fully immersed in oil, splash losses cannot be neglected. Vertical designs should generally be avoided.

The efficiency of worm gear drives is highly speed dependent (see illustration). Bauer worm gear units are available as two-stage worm gear units for frame sizes BS04 and larger. This enables very high reduction ratios and significantly higher efficiency than with pure worm gear units. A loss of 2% per stage can be assumed for two-stage worm gear units.

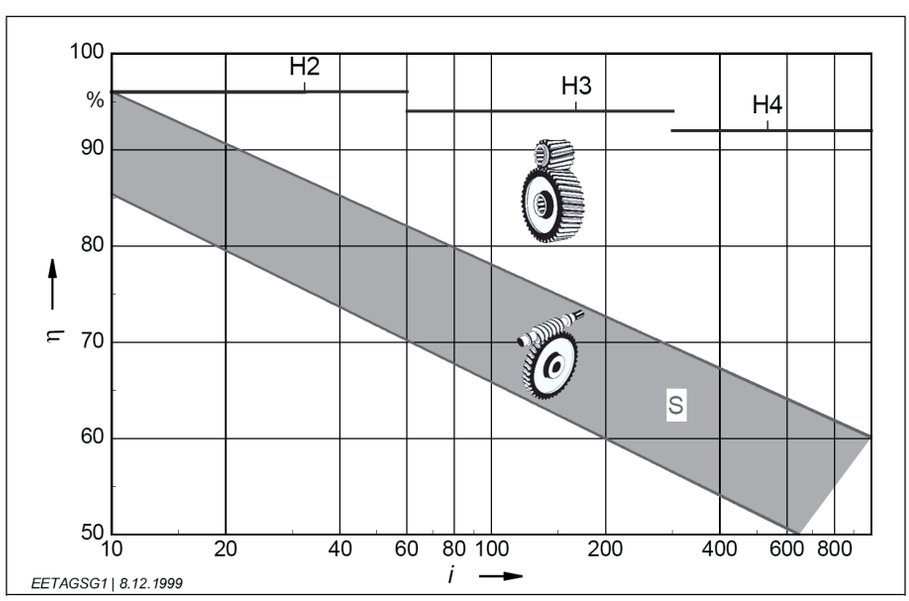

Comparison of typical efficiency (ŋ) versus reduction ratio (i) for helical spur gear units (H) with two, three or four stages and two-stage worm gear units (S), relative to the rated power of the gear unit.

System efficiency η_{system}

The drive system provides the highest savings potential in the analysis of the overall efficiency.. Designers and plant engineers should always strive to optimise the transmission components.

Transmission component	Conditions	Efficiency
Wire rope	Per full turn on the wire drum (with journal or roller bearings)	0.91–0.95
V-belt	Per full turn on the belt pulley (with normal belt tension)	0.88–0.93
Synthetic belts	For each full turn or roll, with roller bearings (normal belt tension)	0.81–0.85
Rubber belts	For each full turn or roll, with roller bearings (normal belt tension)	0.81–0.85
Toothed belts	For each full turn or roll, with roller bearings (normal belt tension)	0.90–0.96
Chains	For each full turn or chainwheel, with roller bearings (depending on chain size)	0.90–0.96
Spindles	Trapezoid-thread spindle Ballscrew spindle	0.30 – 0.70 0.70 – 0.95
Gear unit	With spur gears or bevel gears: 2% per stage, with worm gears and other types of toothing, according to manufacturer's data	0.94–0.98

Shock loads of machinery

Shock loads for various types of machinery are listed in standards and guidelines as well as industry-specific documents and manufacturer's documents. If for example a crusher or a press is listed here with an shock load class of III, this is justified. On the other hand, under favourable conditions a belt conveyor could have an shock load class of I, but this could quickly change to III with on/off operation, high speed and overdrive due to a loose chain. Consequently, the classifications in the following table should by no means be taken blindly. They provide a rough point of reference, but the ultimate classification of the shock load should always take into account the factors specified by Bauer, in particular the inertia ratio, the cycle rate and the transmission component(s).

Drive	Shock load		
Construction machinery			
Construction lifts		II	
Concrete mixers		II	
Road construction machinery		II	
Chemical industry			
Cooling drums		II	
Mixers		II	
Stirrers (light media)	I		
Stirrers (viscous media)		II	
Drying drums		II	
Centrifuges (light)	I		
Centrifuges (heavy)		II	
Transport and conveying systems			
Hauling winches		II	
Conveying machines			III
Apron conveyors		II	
Belt conveyors (bulk material)	I		
Belt conveyors (piece goods)		II	
Bucket belt conveyors		II	
Chain conveyors		II	
Circular conveyors		II	
Freight lifts		II	
Flour bucket conveyors	I		
Passenger lifts		II	
Flat belts		II	
Screw conveyors		II	
Gravel bucket conveyors		II	
Inclined lifts			III
Steel belt conveyors		II	
Chain conveyors		II	
Blowers and fans			
Roots blowers		II	
Blowers (axial and radial)	I		
Cooling tower fans		II	
Suction blowers		II	

Drive	Shock load		
Rubber			
Extruders			III
Calenders		II	
Kneaders			III
Mixers		II	
Rolling mills			III
Timber processing and woodworking			
Debarking drums			III
Planers		II	
Woodworking machinery	I		
Saw frames			III
Crane systems			
Luffing mechanisms	I		
Traversing mechanisms			III
Hoisting mechanisms	I		
Slewing mechanisms		II	
Jib mechanisms		II	
Plastics			
Extruders		II	
Calenders		II	
Mixers		II	
Grinders and pulverisers		II	
Metalworking			
Plate bending machines		II	
Plate straightening machines			III
Hammers			III
Planers			III
Presses			III
Shears		II	
Forging presses			III
Punches			III
Countershafts and driveshafts	I		
Machine tools (principal)		II	
Machine tools (ancillary)	I		

Drive	Shock load		
Food processing			
Filling machines	I		
Kneading machines		II	
Mashing machines		II	
Packaging machines	I		
Sugar cane cutters		II	
Sugar cane mills			III
Sugar beet cutters		II	
Sugar beet washers		II	
Paper			
Couching			III
Smoothing rolls			III
Hollander		II	
Pulp grinder			III
Calender		II	
Wet presses			III
Shredders			III
Suction presses			III
Suction rolls			III
Drying rolls			III
Stone and soil			
Crushers			III
Rotary kilns			III
Hammer mills			III
Tube mills			III
Beating mills			III
Tile and block presses			III
Fabrics			
Winders		II	
Printing and dying machines		II	
Tanning vats		II	
Shredders		II	
Looms		II	

Drive	Shock load		
Rolling mills			
Plate shears			III
Plate turners		II	
Billet presses			III
Billet and slab lines			III
Billet conveyors			III
Wire drawing machines		II	
Descaling machines			III
Sheet metal mills			III
Plate mills			III
Winders (strip and wire)		II	
Cold rolling mills			III
Chain transports		II	
Billet shears			III
Cooling beds		II	
Cross transports		II	
Roller tables (light)		II	
Roller tables (heavy)			III
Roll straighteners		II	
Tube welders			III
Trimming shears		II	
Cropping shears			III
Continuous casting machines			III
Roll adjustment devices		II	
Manipulators			III
Laundry			
Drum dryers		II	
Washing machines		II	
Water treatment			
Centrifugal aerators		II	
Archimedes screw		II	

5

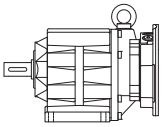

Page

Gearboxes and Lubrication 53-80

Standard fitting
- BG and BF
- BK and BS
Position of the terminal box and the cabel entry
- BG and BF
- BK and BS
Radial and axial forces at the output shaft
Dimensions and fits of output shafts and keyways
Installing transmission elements
Gear with solid shaft
Gear with hollow shaft
Shrink disc coupling
Torque restraint
Notes for installing shaft mount gears with hollow shaft and keyway
Gear ventilation
Output shaft seals
Lubricants
Lubricant quantities
Lubricant quantities, BG-series gears
Lubricant quantities, BG-20-01R
Lubricant quantities, BF-series gears
Lubricant quantities, BK-series gears
Lubricant quantities, BS-series gears
Lubricant quantities, pre-stage gears (Z)
Lubricant quantities, intermediate gears
Additional lubricant quantities, gear versions with externally mounted coupling - C
Additional lubricant quantities, gear versions with externally mounted coupling - K
Additional lubricant quantities, gear versions with input shaft - SN
Position of threaded plugs, BG-series gears
Position of threaded plugs, BG-20-01R
Position of threaded plugs, BF-series gears
Position of threaded plugs, BK-series gears
Position of threaded plugs, BS-series gears
Position of threaded plugs, pre-stage gears (Z)
Position of the grease nipple for gearbox designs with
- mounted coupling - C
- mounted coupling - K
Position of the grease nipple for gearbox designs with Input Shaft - SN
Position of the drain plugs in the System Cover

Standard fitting positions

Reihe BG

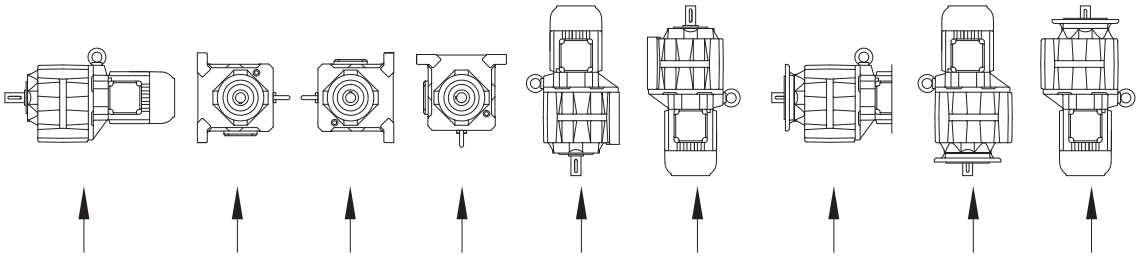

Einbaulage (Fußgehäuse)
angegossener Fuß mit Durchgangslöchern (Code -1.)

B3 B6 B7 B8 V5 V6

Einbaulage

(Anbaugehäuse mit Flansch- oder Fußbefestigung)
Flansch (Code -2./Code -3./Code -4./Code -7.)

Fuß mit Gewindelöchern (Code -6.)
Fuß mit Durchgangslöchern (Code -9.)

H4 H1 H2 H3 H5 H6 B5 V1 V3

Reihe BF

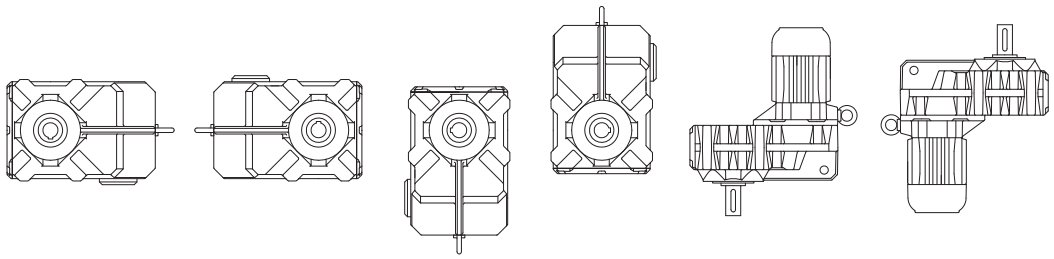

Einbaulage

H1 H2 H3 H4 V1 V2

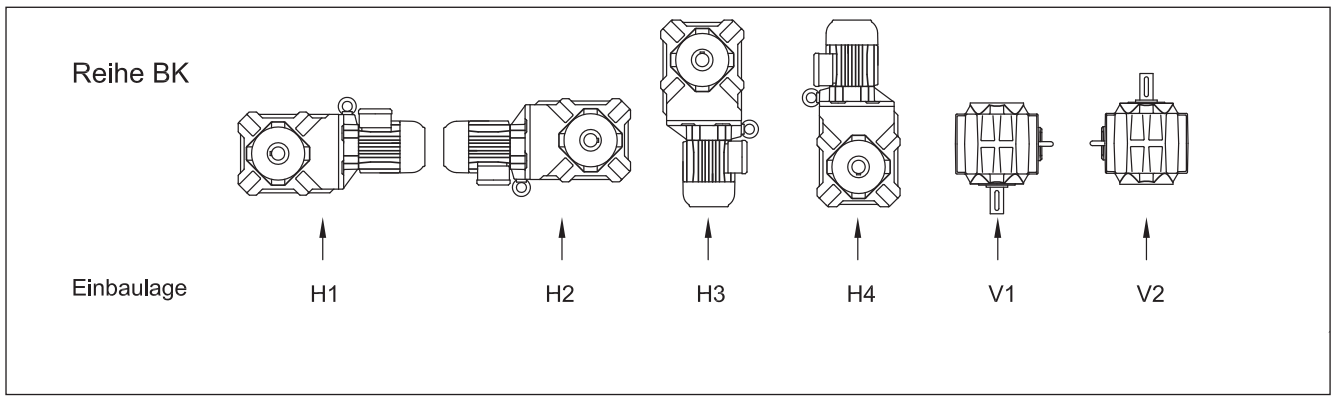
Reihe BK
Einbaulage
H1
H2
H3
H4
V1
V2

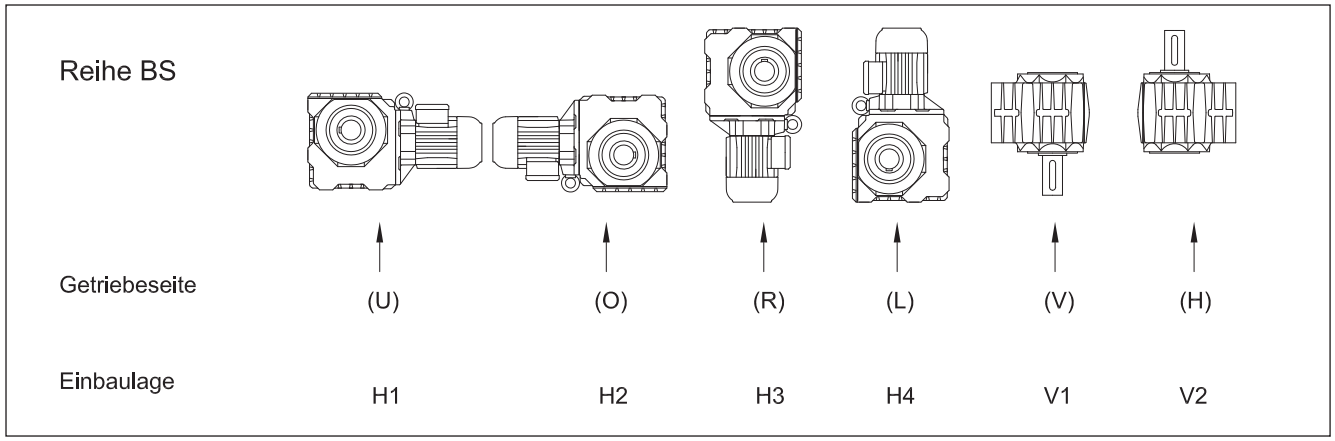
Reihe BS
Getriebeseite
(U)
(O)
(R)
(L)
(V)
(H)
Einbaulage
H1
H2
H3
H4
V1
V2

Postion of the terminal box

Position of the terminal box and the cable entry points (BG and BF)

The standard position of the terminal box for helical-gear and shaft- mounted geared motors is position I. Cables may be introduced from side A or C.

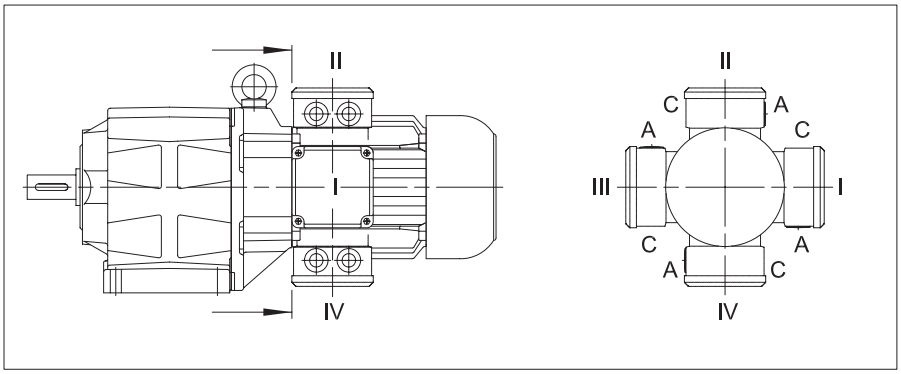

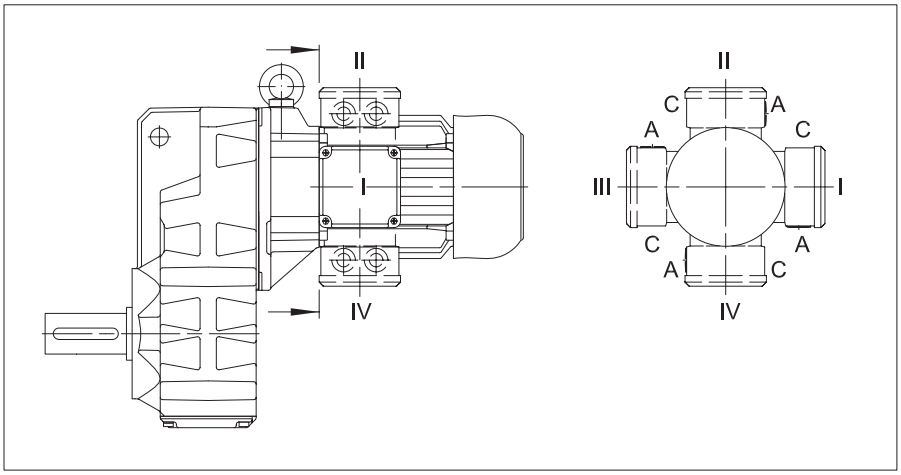

Turning or rotating the gearbox in space in the different mounting positions according to DIN 42950 does not influence the marking as shown. The details of the terminal box always show the position of the terminal box and the cable entry in relation to the gearbox and not in space. The mounting according to DIN 42950 is to be given separately.

Position of the terminal box and the cable entry points (BK and BS)

The standard position of the terminal box for bevel-geared and worm- geared motors is position II.

Cable entry through side A or side C is possible

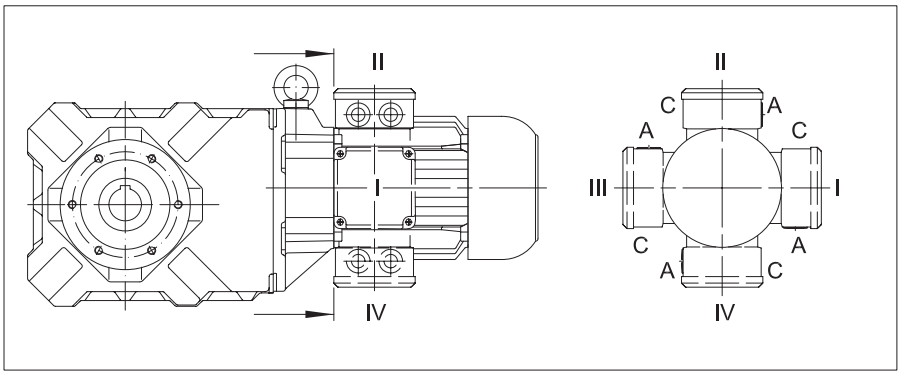

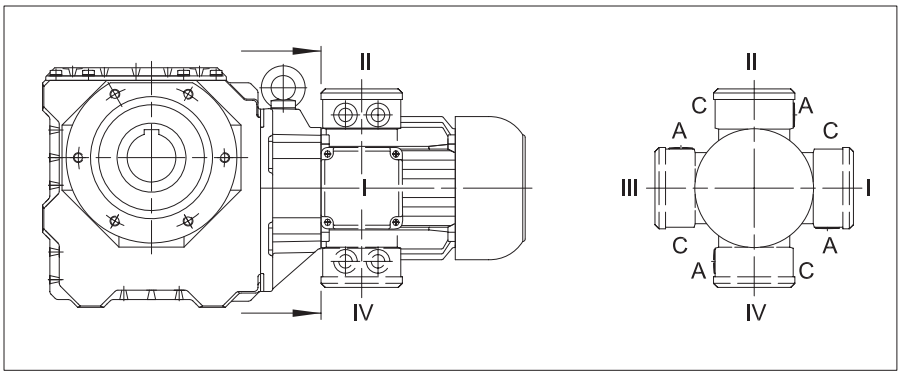

Turning or rotating the gearbox in space in the different mounting positions according to DIN 42950 does not influence the marking as shown. The details of the terminal box always show the position of the terminal box and the cable entry in relation to the gearbox and not in space. The mounting according to DIN 42950 is to be given separately.

Radial and axial forces at the output shaft

The output shafts and output-shaft bearings are matched to the motor torques. It is advisable to locate the drive-transmission element's point of application as close as possible to the shaft collar to ensure that the load imposed by external radial forces is not unnecessarily high. Permissible values for radial forces referred to the output shaft centreline are listed in the selection tables. Please consult us if your application involves extra-high axial loading.

Dimensions and fits of output shafts and keyways

Output shaft and second shaft stub, keyway and key are in compliance with the DIN standards and ISO fits listed below:

Solid shaft

Shaft diameter	to D = 50 mm in ISO k6 (DIN 748 Page1)
	as of D = 50 mm in ISO m6 (DIN 748 Page 1)
Keyway	ISO P9 (DIN 6885 Page 1)
Key, height	ISO h9 (DIN 6885 Page 1 and DIN 6880)
Bore - customer	ISO H7

Hollow shaft with keyway

Bore diameter	ISO H7 (DIN 748)
Keyway	ISO JS9 (DIN 6885 Page 1)
Key, height	ISO h9 (DIN 6885 Page 1 and DIN 6880)
Customer shaft	ISO h6

Hollow shaft for shrink-on disc coupling (SSV)

Outside diameter	ISO f7
Inside diameter	ISO H7
Customer shaft	ISO h6

Installing transmission elements

Note:
Gearboxes using torque reaction by means of a flange (Code 2.; 3; 4.; 7.; 8.) or torque arm (Code 5.), must have the side for the torque reaction the same as where the radial force on the output shaft occurs (see rubber buffers for torque arms)! Please consult the factory for other designs.

Gear with solid shaft

Always exercise meticulous care when fitting transmission elements onto output shafts and, whenever possible, use the DIN 332 tapped bore provided for this purpose. Fitting is usually easier if the transmission element can be heated to approximately 100° C for installation. Dimension the locating bore to ISO H7.

Gears with solid shaft at each end (gear code -.3/): alignment of the two keys is subject to the DIN 7168 tolerances, the degree of accuracy is "fine**".**

Gear with hollow shaft

Hollow shafts usually engage solid shafts of the driven machinery. The gear unit must be mounted such as to be free of constraint and be fixed axially (e.g. by means of assembly help acc. following description "notes for installing shaft mount gears with hollow shaft and keyway"). Special contract provision must be made if the hollow shaft has to guide the solid shaft or, for any other reason, close out-of-round tolerance referenced to a point on the gear housing (such as a flange, for instance) is required.

Shrink disc coupling

A shrink disc coupling (SSV) can transmit high torque from the non- grooved hub to the smooth shaft. The SSV is easily secured and released, using commercially available bolts. SSVs are the ideal supplement for shaft mount gears. The maximum transmittable torque for the selected shrink discs when fitted and mounted according to instructions is above the breakaway torque of the respective motors classified as standard (for classification of shrink disc sizes see chapter 11, 12, 13 "Additional dimensional drawings for Shrink disc coupling)

Torque restraint

Shaft-mounted geared motors require a suitable torque restraint to resist the reaction torque. Shaft-mounted gears have cast torque arms as standard. Bevel gears and worm gears are available with bolt-on torque arms on request. The torque arm is screwed onto the front "V" on the side of the gear unit. It is always important to ensure that the torque arm does not create excessive constraining forces due to the driven shaft running untrue, for example. Excessive play can result in excessive shock torques in switching or reversing operations. Consequently, we recommend the use of pre-tensioned rubber damping elements. These rubber buffers are part of the scope of supply for designs with a torque arm (see chaper 11, 12., 13 dimensional drawings "Rubber buffer for torque restraint")

Notes for installing shaft mount gears with hollow shaft and keyway

(1) Attaching the hollow shaft to the customer shaft
Threaded bolt (d) is screwed into the end thread of the shaft to be driven. By tightening the nut, apply force to thrust plate (b) and locating ring (c) to draw the gear unit onto the shaft.

(2) Axial fastening
Pressure piece (b) is rotated and fitted against retaining ring (c) using fixing screw (a).

(3) Removing
Extractor (f) is fitted between the end face of the shaft and retainer ring (c). Tighten press-off screw (e) against the end of the shaft and pull the gear unit off the shaft. Manufacturing drawings for the required parts are available on request. These parts are not included in the scope of supply.

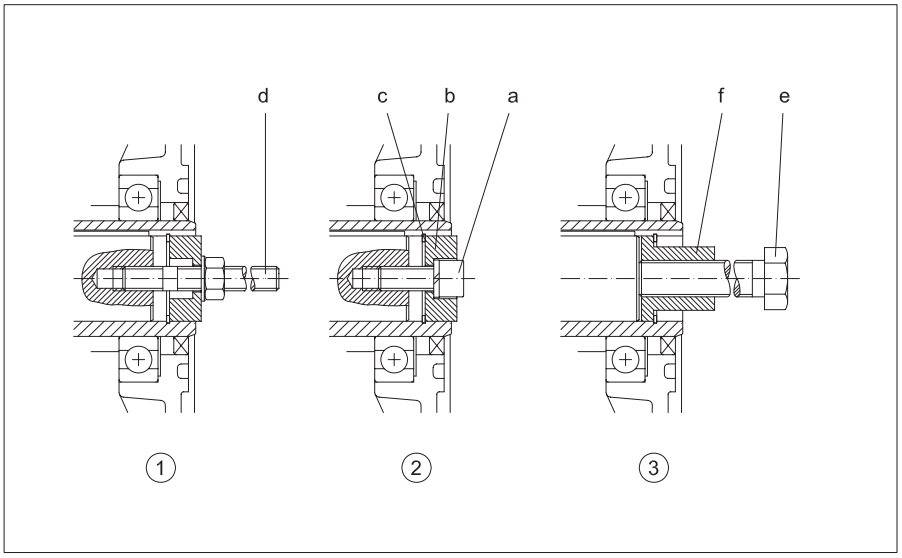

Detailed information on shaft-mounted gear units, bevel-gear units and worm-gear units is available (see chaper 11, 12., 13 dimensional drawings "Tools for fitting shaft-mounted gear with hollow shaft and keyway").

Gear ventilation

The lifetime of the gearbox lubricant is increases the better it is protected from negative environmental influences. Should the oil level or the gearbox ratio cause a very high lubricant temperature, the gearbox will be supplied as standard with a breather plug. Either on request or for corresponding high ambient temperatures, all gearboxes as from size 10 can be supplied with a breather plug.

For the position of the threaded plugs see chapter 5 theraded plugs.

Output shaft seals

All size 10 and larger gears are available with double seals for the output shaft on request and at extra cost. Double seals are particularly effective if the output shaft points down and as protection against external influences

Lubricants

The drives are shipped ready-filled with gear lubricant. Lubricated in this way, the gear units are suitable for ambient temperatures in the range -20°C to + 40°C. The quantity of lubricant is optimised for the desired installed position as is stated in the motor rating plate. The type of lubricant is stated in the Operating Instructions. Lubricants for other temperature ranges or special applications available on request.

Wear-protective EP gear oils as indicated in the following table have proved particularly effective:

	Lubricant type				
	Mineral Oil	Synthetic Oil			USDA H1 Oil
	ISO VG 220	ISO VG 68	ISO VG 220	ISO VG 460	ISO VG 220
	Standard oil for gearboxes in the series **BF06-BF90 BG04-BG100 BK60-BK90**	Low temperature oil for gearboxes in the series **BF06-BF90 BG04-BG100 BK60-BK90** **BS02-BS40**	Standard oil for gearboxes in the series **BS02-BS10 BK06-BK10** High temperature oil for gearboxes in the series **BS02-BS10 BK06-BK10 BF06-BF90 BG04-BG100 BK60-BK90**	Standard oil for gearboxes in the series **BS20-BS40 BK20-BK50** High temperature oil for gearboxes in the series	Food and Beverage Industry Oil for gearboxes in the series **BF06-BF90 BG04-BG100 BK06-BK90** **BS02-BS40**
Lubricant Manufacturer					
AGIP	BLASIA 220				
ARAL	DEGOL BMB220 DEGOL BG220		DEGOL GS220	DEGOL GS460	
BECHEM RHUS	STAROIL SMO220				
BP	ENERGOL GR-XP220		ENERSYN SG-XP 220	ENERSYN SG-XP 460	
CASTROL	ALPHA SP 220 ALPHA BMB 220 OPTIGEAR BM 220 TRIBOL 1100/220		ALPHASYN PG 220 TRIBOL 800/220 ALPHASYN GS 220	ALPHASYN PG 460 TRIBOL 800/460 ALPHASYN 460	CASTROL OPTILEB GT 220 CASTOL TRIBOL FOODFROOF 1800/220
ESSO	SIEHE MOBIL				
FUCHS	RENOLIN CLP 220 RENOLIN CLPF 220 SUPER	RENOLIN PG 68	RENOLIN PG 220	RENOLIN PG 460	
KLÜBER	KLÜBEROIL GEM 1-220 N	KLÜBERSYNTH GH6-80	KLÜBERSYNTH GH6-220	KLÜBERSYNTH GH6-460	KLÜBEROIL 4UH1-220N KLÜBERSYNTH UH1 6-220
MOBIL	MOBILGEAR 600 XP 220 MOBILUBE HD PLUS 80W-90		GLYGOYLE 220 GLYGOYLE 30	GLYGOYLE 460	
OEST	Gearol C-LP 220				
OPTIMOL	OPTIGEAR 220		OPTIFLEX A 220	OPTIFLEX A 460	OPTILEB GT 220
SHELL	OMALA S2 G220 FALCON CLP 220		OMALA S4 WE 220	OMALA S4 WE 460	CASSIDA FLUID GL 220
TEXACO	GEARTEX EP-A SAE 85W-90				
TOTAL	CARTER EP 220				NEVASTANE SL220
WINTERSHALL	SRS ERSOLAN 220				

Important:
Synthetic gear oils of a Polyglykol base (e.g. PGLP…) must be disposed of separately to mineral oil as **Special Waste** .

So long as the ambient temperature does not fall below – 20 °C the international definition of the viscosity class at 40 °C according to ISO 3448 and DIN 51519 ISO the viscosity class VG220 (SAE90) is recommended according, in North America AGMA 5EP.

For lower temperatures it is recommended to use oils of a lower nominal viscosity with a corresponding better starting characteristic, for instance a PGLP with a nominal viscosity VG68 (SAE80) or AGMA 2EP respectively. These types of oil can already be necessary at a temperature around the freezing point, if the break away torque of a drive is reduced by some smooth starting device or if the motor has a relatively low power

Lubricant quantities

The preferred quantity of lubricant for the planned type of installation is stated on the motor's rating plate (symbol "oil can"). When topping up care should be taken to ensure that, depending on the fitting position, gearwheels and rolling contact bearings positioned at the top are also properly oiled. In special versions the oil level mark should be noted. Information about the quantity of lubricant required for other types of installation can be obtained from the factory

Lubricant quantities, BG-series gears

Schmierstoffmenge in l

Getriebetyp

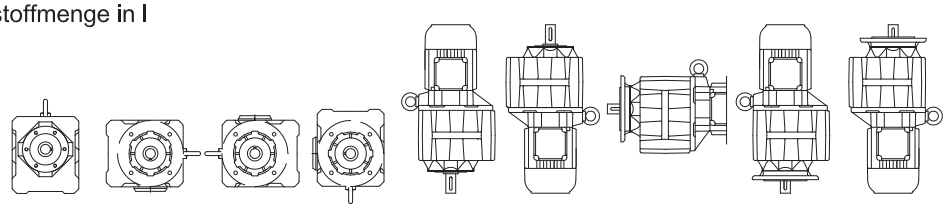

BG04-BG100 (Anbaugehäuse mit Flansch- o. Fußbefestigung)

Flansch (Code -2./Code -3./Code -4./Code -7.)
Fuß mit Gewindelöchern (Code -6.)

Fuß mit Durchgangslöchern (Code -9.)
[allseitig bearbeitet (Code -8.)]

BG04-BG100

(Fußgehäuse)

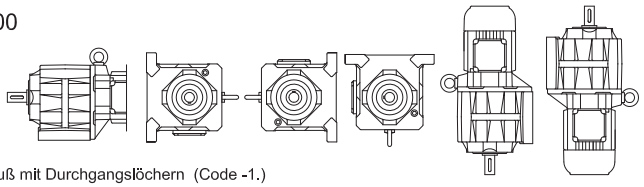

angegossener Fuß mit Durchgangslöchern (Code -1.)

		B3	B6	B7	B8	V5	V6	H4	H1	H2	H3	H5	H6	B5	V1	V3
BG04	✳	-	0.03	0.03	0.03	-	-	0.03	0.05	0.05						
	✳✳	0.05	0.05	0.05	0.05	0.1	0.05	-	-	-						
BG05	✳	-	0.05	0.05	0.05	-	-	0.05	0.08	0.08						
	✳✳	0.08	0.08	0.08	0.08	0.16	0.08	-	-	-						
BG06	✳	-	0.08	0.08	0.08	-	-	0.08	0.15	0.15						
	✳✳	0.12	0.12	0.12	0.12	0.24	0.15	-	-	-						
BG10	✳	0.65	0.65	0.65	0.85	1.05	0.85	0.65	1.05	0.85						
	✳✳	0.45	0.45	0.45	0.6	0.75	0.6	-	-	-						
BG20	✳	0.8	0.8	0.8	1.1	1.4	1.1	0.8	1.4	1.1						
	✳✳	0.6	0.6	0.6	1.0	1.15	0.9	-	-	-						
BG30	✳	1.0	1.0	1.0	1.7	2.2	1.6	1.0	2.2	1.6						
	✳✳	1.0	1.0	1.0	1.7	2.3	1.7	-	-	-						
BG40	✳	1.7	1.7	1.7	2.5	3.5	2.1	1.7	3.5	2.1						
	✳✳	1.7	1.7	1.7	2.5	3.5	2.1	-	-	-						
BG50	✳	3.0	3.0	3.0	4.5	5.5	3.3	3.0	5.5	3.3						
	✳✳	3.0	3.0	3.0	4.5	5.5	3.3	-	-	-						
BG60	✳	5.5	5.5	5.5	7.0	10.9	6.4	5.5	10.9	6.4						
	✳✳	5.5	5.5	5.5	7.0	10.9	6.4	-	-	-						
BG70		6.5	6.5	6.5	8.0	13.5	9.0	6.5	13.5	9.0						
BG80		11.0	11.0	11.0	11.0	22.5	15.0	11.0	22.5	15.0						
BG90		19.0	19.0	19.0	19.0	40.0	26.0	19.0	40.0	26.0						
BG100		35.0	35.0	55.0	50.0	66.0	50.0	35.0	66.0	50.0						

✳ Anbaugehäuse

✳✳ Fußgehäuse

Lubricant quantities, BG20-01R

Getriebetyp	Schmierstoffmenge in l					
	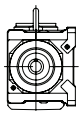 H4	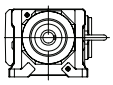 H1	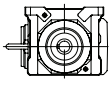 H2	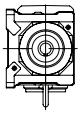 H3	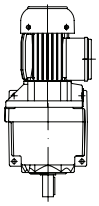 V5	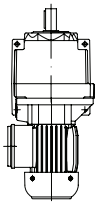 V6
BG20-01R	0.8	1.0	0.8	1.4	1.65	1.0

Lubricant quantities, BF-series gears

Schmierstoffmenge in l

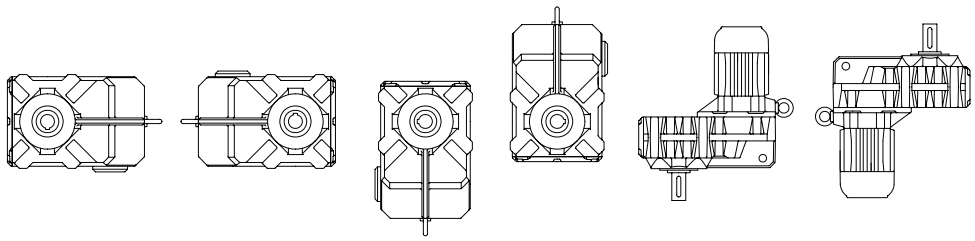

Getriebetyp	H1	H2	H3	H4	V1	V2
BF06	0.25	0.25	0.25	0.37	0.35	0.3
BF10	0.85	0.85	0.85	1.1	1.45	1.5
BF20	1.3	1.3	1.3	1.7	2.2	2.25
BF30	1.7	1.7	1.7	2.2	3.2	3.0
BF40	2.7	2.7	2.7	3.5	4.9	4.8
BF50	3.8	3.8	3.8	5.0	6.7	6.7
BF60	6.7	6.7	6.7	9.0	12.3	12.0
BF70	12.2	12.2	12.2	16.0	24.2	21.8
BF80	17.0	17.0	17.0	21.0	32.2	27.5
BF90	32.0	32.0	32.0	41.0	62.0	53.0

Lubricant quantities, BK-series gears

Schmierstoffmenge in l

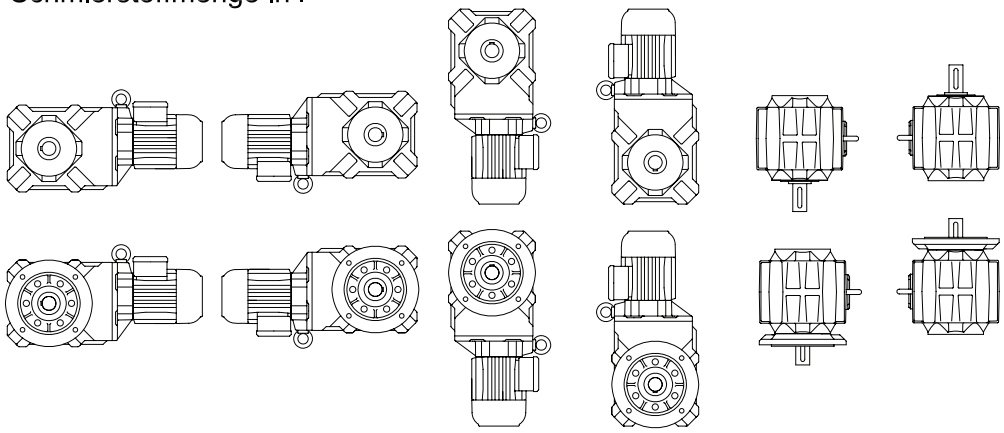

Getriebetyp	H1	H2	H3	H4	V1	V2
BK06	0.15	0.23	0.29	0.31	0.18	0.23
BK10	0.83	0.83	0.92	1.75	0.92	0.92
BK20	1.5	1.5	1.6	2.9	1.65	1.65
BK30	2.2	2.2	2.3	4.4	2.4	2.4
BK40	3.5	3.5	3.5	6.7	3.7	3.7
BK50	5.8	5.8	5.8	11.5	6.0	6.0
BK60	6.0	8.7	6.9	12.0	8.6	8.6
BK70	10.2	15.0	11.5	20.5	13.5	14.5
BK80	18.0	25.5	19.0	37.0	23.5	25.5
BK90	33.0	48.0	36.0	69.0	45.0	48.0

Lubricant quantities, BS-series gears

Schmierstoffmenge in l

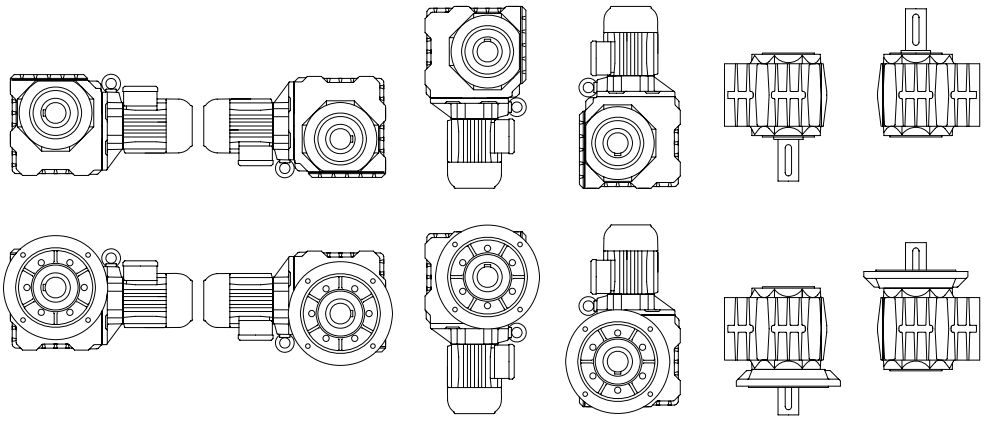

Getriebetyp	H1	H2	H3	H4	V1	V2
BS02	0.06	0.06	0.06	0.06	0.06	0.06
BS03	0.17	0.17	0.17	0.17	0.17	0.17
BS04	0.11	0.17	0.11	0.2	0.11	0.11
BS06	0.24	0.36	0.24	0.45	0.24	0.24
BS10	0.9	1.3	0.9	1.6	0.9	0.9
BS20	1.5	2.1	1.5	2.7	1.5	1.5
BS30	2.2	3.0	2.2	3.8	2.2	2.2
BS40	3.5	4.7	3.5	6.0	3.5	3.5

Lubricant quantities, pre-stage gears (Z)

Schmierstoffmenge in l

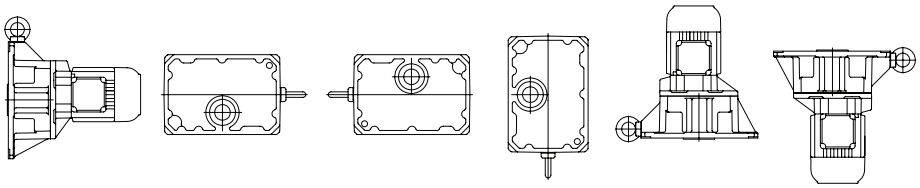

	B3 H4 B5	B6 H1	B7 H2	B8 H3	V5/H5 V1	V6/H6 V3 V2
BG / BF						
BK / BS	H1	V1	V2	H2	H4	H3
Getriebetyp						
BG10Z BF10Z BK10Z BS10Z	0.10	0.05	0.12	0.07	0.16	0.07
BG20Z BF20Z BK20Z BS20Z	0.15	0.07	0.19	0.17	0.27	0.10
BG30Z BF30Z BK30Z BS30Z BM30Z	0.2*	0.10	0.35	0.22	0.35	0.19
BG40Z BF40Z BK40Z BS40Z BM40Z	0.32*	0.17	0.50	0.37	0.6	0.32
BG50Z BF50Z BK50Z	0.5	0.3	0.92	0.7	1.15	0.5
BG60Z BF60Z BK60Z	0.9	0.5	1.55	1.1	2.0	0.7
BG70Z BF70Z BK70Z BF80Z	1.2	0.6	1.8	1.6	2.4	1.4
BG80Z BF90Z BK80Z BG100Z	3.1	1.3	4.0	2.6	5.2	2.0
BG90Z BK90Z	4.2	1.5	5.4	3.5	7.7	3.0

*: bei BM30Z/BM40Z wird der Schmierstoff der Vorstufe in das Hauptgetriebe mitbefüllt.

Threaded plugs

Schmierstoffmengen für Zwischengetriebe

Definition der KLK-Lage

KLK-Lage für Zwischengetriebe gleich
wie Hauptgetriebe d.h.
Hauptgetriebe BG,BF Standard KLK-Lage I
-> Vorschaltgetriebe Standard KLK-Lage I
Hauptgetriebe BK,BS Standard KLK-Lage II
-> Vorschaltgetriebe Standard KLK-Lage II

Schmierstoffmenge in l

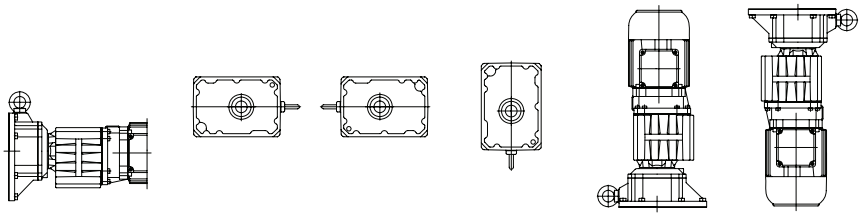

Baulage des Hauptgetriebes								
	BG / BF	B3 H4 B5	B6 H1	B7 H2	B8 H3	V5/H5 V1	V6/H6 V3 V2	
	BK / BS	H1	V1	V2	H2	H4	H3	
Standardlage d. KLK Baulage H1,H2,H3,B5,V1,V3 für Anbau mit geschraubtem bzw. angegossenem Flansch		B5	H1	H2	H3	V1	V3	
Typenbezeichnung des Doppelgetriebes								
BG06G04 BS06G04 BK06G04		0.03	0.03	0.03	0.03	0.05	0.05	
BG10G06 BF10G06 BK10G06 BS10G06		0.08	0.08	0.08	0.08	0.15	0.15	
BG20G06 BF20G06 BK20G06 BS20G06		0.08	0.08	0.08	0.08	0.15	0.15	
BG30G06 BF30G06 BK30G06 BS30G06		0.08	0.08	0.08	0.08	0.15	0.15	
BG40G10 BF40G10 BK40G10 BS40G10		0.65	0.65	0.65	0.85	1.05	0.85	
BG50G10 BF50G10 BK50G10		0.65	0.65	0.65	0.85	1.05	0.85	
BG60G20 BF60G20 BK60G20		0.8	0.8	0.8	1.1	1.4	1.1	
BG70G20 BF70G20 BK70G20		0.8	0.8	0.8	1.1	1.4	1.1	
BG80G40 BF80G40 BK80G40		1.7	1.7	1.7	2.5	3.3	2.1	
BG90G50 BF90G50 BK90G50 BG100G50		3.0	3.0	3.0	4.5	5.5	3.3	

Position of threaded plugs, BG-series gears

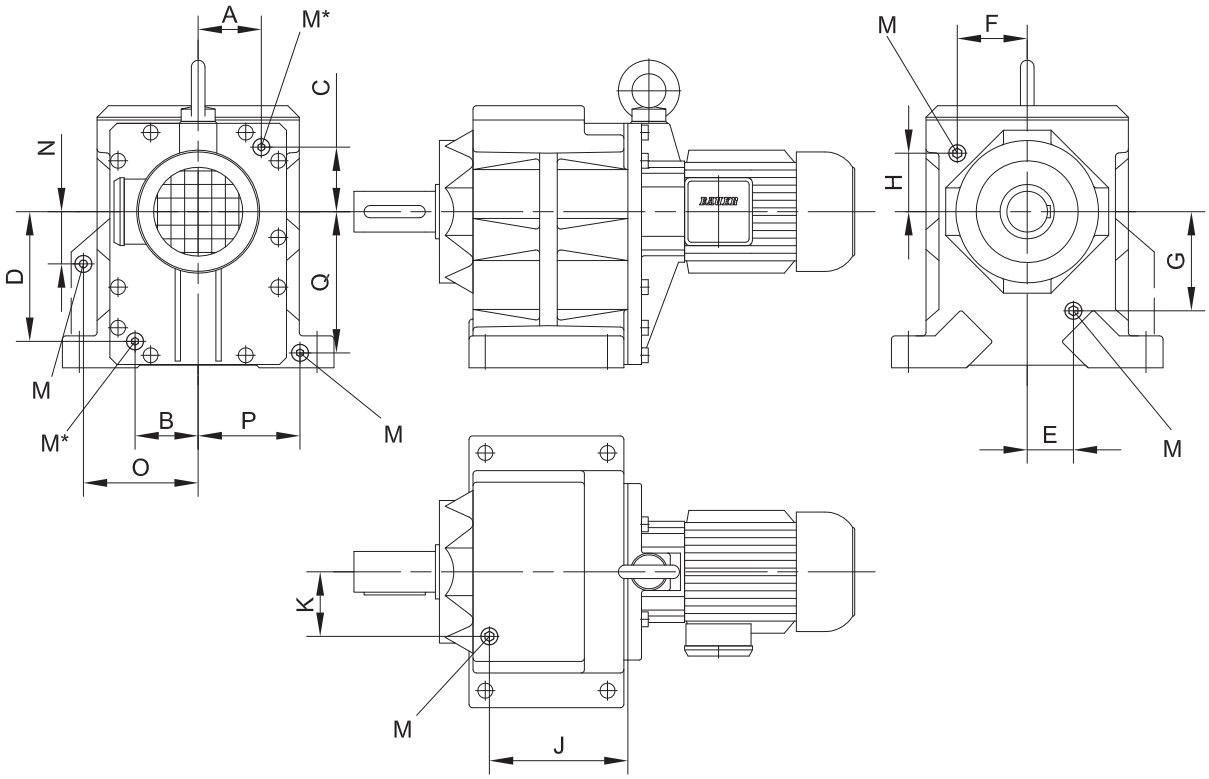

M = Verschlussschraube n. DIN 908

Typ	A	B	C	D	E	F	G	H	J	K	N	O	P	Q	M
BG10 Fußgehäuse	siehe Lage der Verschlussschraube auf dem Systemdeckel	Tab.I-Tab.III Größe B.10			33	42	48	41.5	-	-	-	-	-	-	M10x1
BG10 Anbaugehäuse		Tab.I-Tab.III Größe B.10			27	-	73	-	-	-	-	-	-	-	M10x1
BG20 Fußgehäuse		Tab.I-Tab.III Größe B.20			-	47	-	52.5	-	-	-	-	-	-	M10x1
BG20 Anbaugehäuse		Tab.I-Tab.III Größe B.20			-	28	-	68	-	-	-	-	-	-	M10x1
BG30 Fußgehäuse		Tab.I-Tab.III Größe B.30			-	54	-	58	-	-	-	-	-	-	M10x1
BG30 Anbaugehäuse		Tab.I-Tab.III Größe B.30			-	58	-	48	-	-	-	-	-	-	M10x1
BG40 Fußgehäuse		Tab.I-Tab.III Größe B.40			-	75	-	48	-	-	-	-	-	-	M14x1.5
BG40 Anbaugehäuse		Tab.I-Tab.III Größe B.40			-	75	-	48	-	-	-	-	-	-	M14x1.5
BG50 Fußgehäuse		Tab.I-Tab.III Größe B.50			-	53	-	100	-	-	-	-	-	-	M14x1.5
BG50 Anbaugehäuse		Tab.I-Tab.III Größe B.50			-	53	-	100	-	-	-	-	-	-	M14x1.5
BG60 Fußgehäuse		Tab.I-Tab.III Größe B.60			-	70	-	119	-	-	-	-	-	-	M20x1.5
BG60 Anbaugehäuse		Tab.I-Tab.III Größe B.60			-	70	-	119	-	-	-	-	-	-	M20x1.5
BG70		Tab.I-Tab.III Größe B.70			-	103	-	86	204	95	-	-	-	-	M20x1.5
BG80		Tab.I-Tab.III Größe B.80			-	133	-	110	237	111	-	-	-	-	M20x1.5
BG90		Tab.I-Tab.III Größe B.90			-	165	-	124	297	140	-	-	-	-	M24x1.5
BG100		Tab.I-Tab.III Größe B.80			-	202	-	128	420	165	135	263	202	293	M24x1.5

M* =Factor and position of the drain plug see page 77.

Threaded plugs

Position of threaded plugs, BG-20-01R

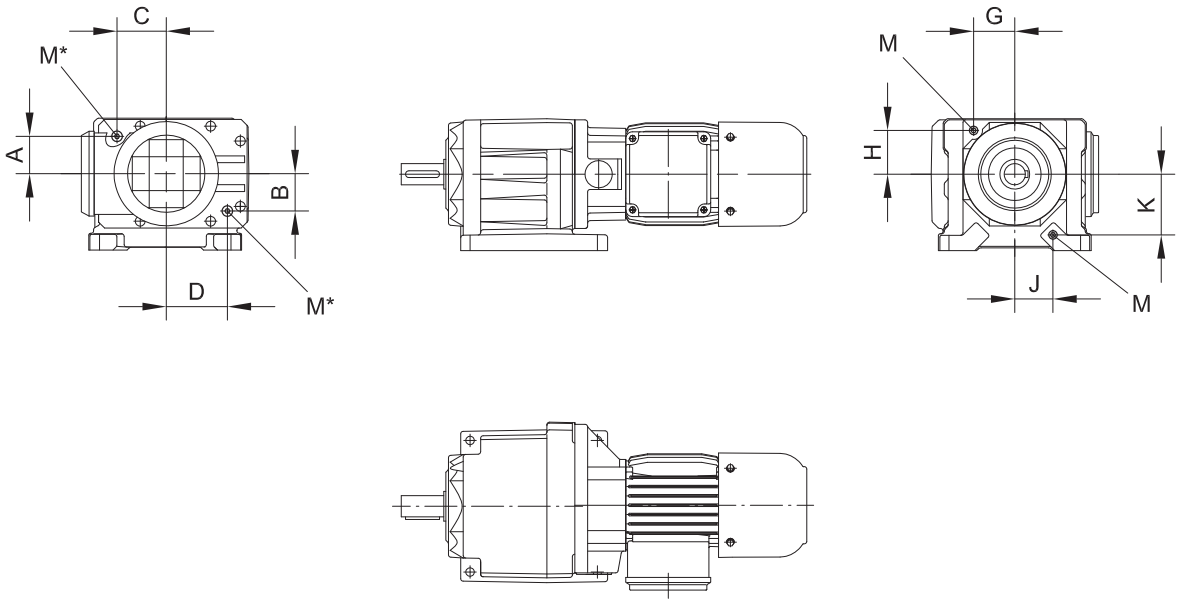

M = Verschlussschraube n. DIN 908

Typ	A	B	C	D	G	H	J	K	M
BG20-01R Rollenbahn	siehe Lage der Verschlussschraube auf dem Systemdeckel Tab.I-Tab.III Größe B20				48.5	51.5	45	71.5	M10x1

M* =Factor and position of the drain plug see page 77.

Position of threaded plugs, BF-series gears

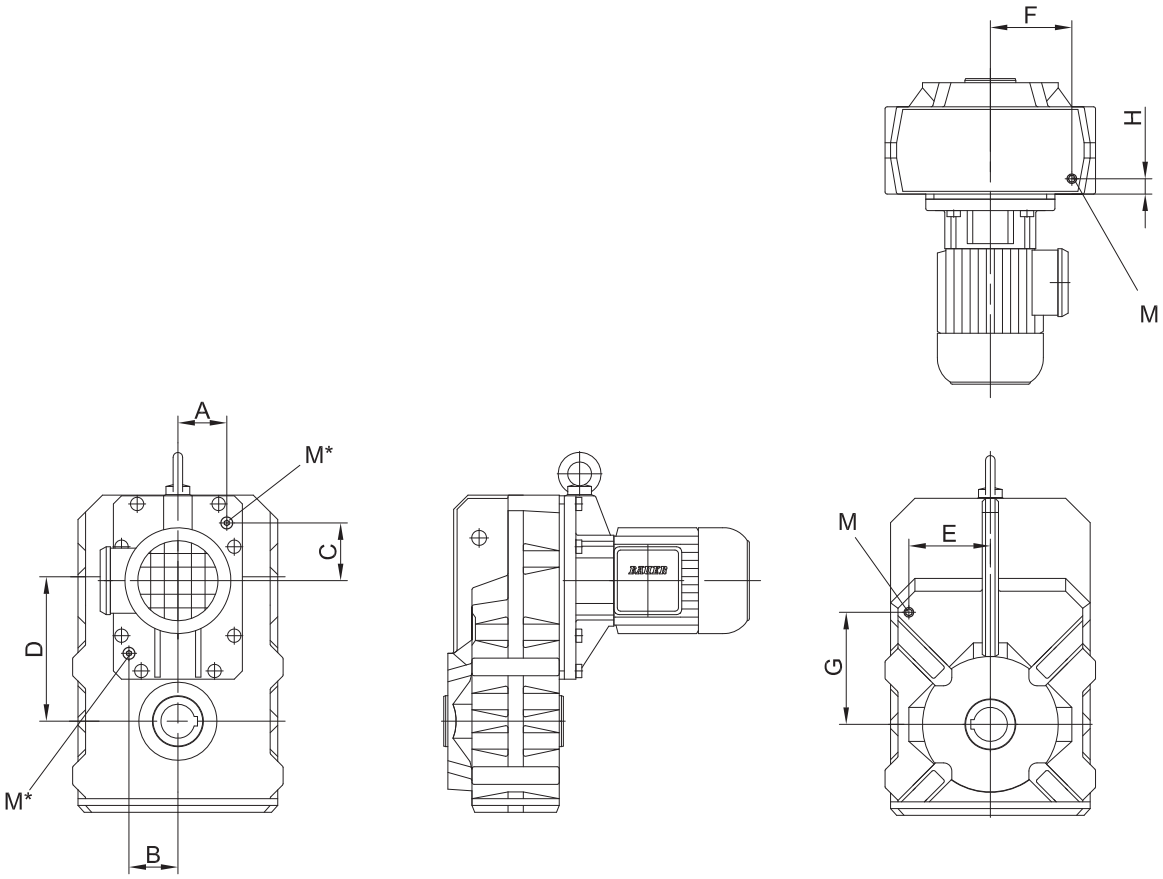

M = Verschlussschraube n. DIN 908

Typ	A	B	C	D	E	F	G	H	M
BF06	siehe Lage der Verschlussschrauben auf dem Systemdeckel		auf Anfrage						
BF10			Tab.I - Tab.III Größe B.10		64	65	97	28	M10x1
BF20			Tab.I - Tab.III Größe B.20		77	70	115	30.5	M10x1
BF30			Tab.I - Tab.III Größe B.30		88	82	125	36.5	M10x1
BF40			Tab.I - Tab.III Größe B.40		100	86	141	33	M14x1.5
BF50			Tab.I - Tab.III Größe B.50		120	105	165	42.5	M14x1.5
BF60			Tab.I - Tab.III Größe B.60		140	145	200	50.5	M20x1.5
BF70			Tab.I - Tab.III Größe B.70		165	177	235	52.5	M20x1.5
BF80			Tab.I - Tab.III Größe B.70		145	148	255	123	M20x1.5
BF90			Tab.I - Tab.III Größe B.80		155	176	347.5	260	M24x1.5

M* =Factor and position of the drain plug see page 77

Threaded plugs

Position of threaded plugs, BK-series gears

BK10-BK50

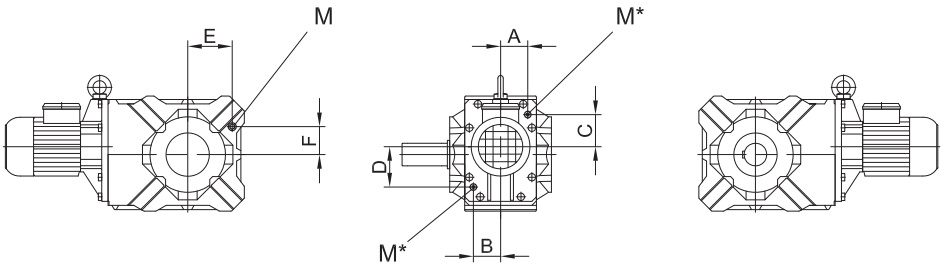

BK60-BK90

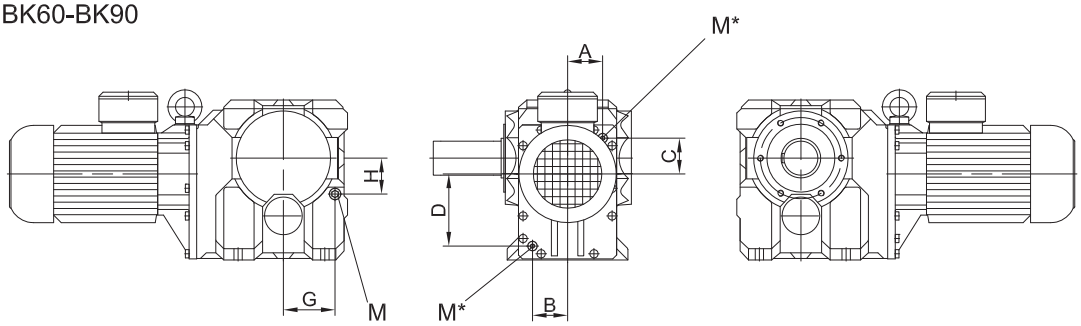

M = Verschlussschraube n. DIN 908

Typ	A	B	C	D	E	F	G	H	M
BK06	siehe Lage der Verschlussschrauben auf dem Systemdeckel		auf Anfrage						
BK10			Tab.I- Tab.III Größe B.10		62	32.5	-	-	M10x1
BK20			Tab.I- Tab.III Größe B.20		73.5	37.5	-	-	M10x1
BK30			Tab.I- Tab.III Größe B.30		80	43	-	-	M10x1
BK40			Tab.I- Tab.III Größe B.40		88	49	-	-	M14x1.5
BK50			Tab.I- Tab.III Größe B.50		118	74	-	-	M14x1.5
BK60			Tab.I- Tab.III Größe B.60		-	-	93	87	M20x1.5
BK70			Tab.I- Tab.III Größe B.70		-	-	137	95	M20x1.5
BK80			Tab.I- Tab.III Größe B.80		-	-	150	117	M20x1.5
BK90			Tab.I- Tab.III Größe B.90		-	-	208	135	M24x1.5

M* =Factor and position of the drain plug see page 77.

Position of threaded plugs, BS-series gears

BS10 - BS20

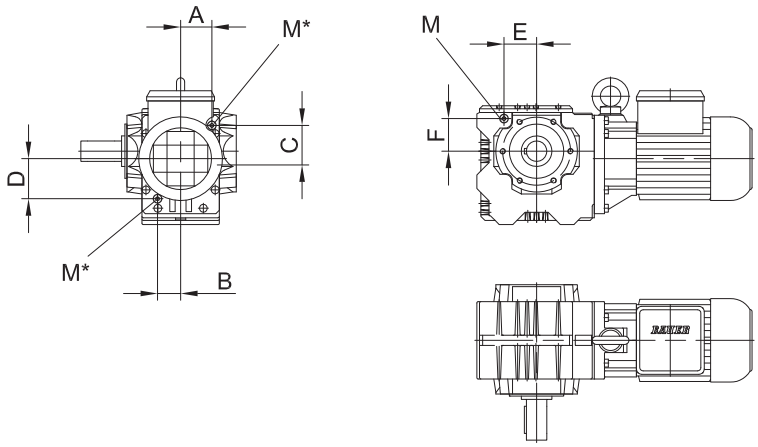

BS30 - BS40

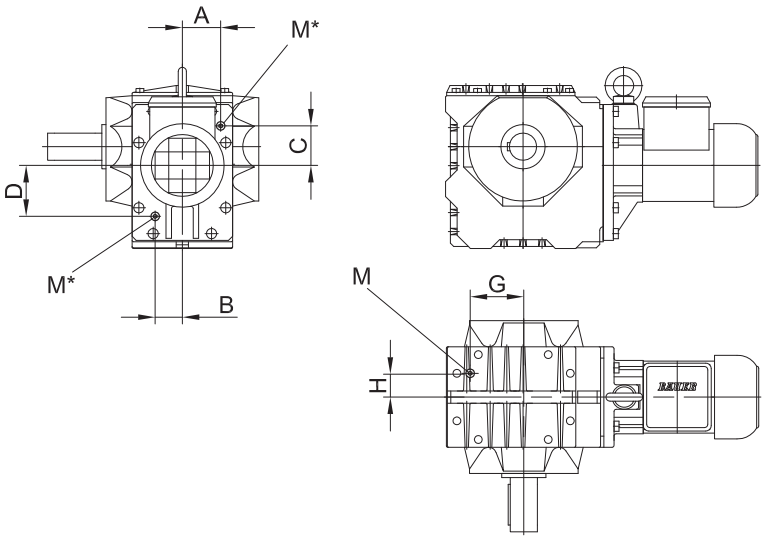

M = Verschlussschraube n. DIN 908

Typ	A	B	C	D	E	F	G	H	M
BS10	siehe Lage der		Tab.I-Tab.III Größe B.10		48	50	-	-	M10x1
BS20	Verschlussschrauben		Tab.I-Tab.III Größe B.20		59	63	-	-	M10x1
BS30	auf dem		Tab.I-Tab.III Größe B.30		-	-	79	35	M10x1
BS40	Systemdeckel		Tab.I-Tab.III Größe B.40		-	-	93.5	41.5	M14x1.5

M* =Factor and position of the drain plug see page 77.

Threaded plugs

Position of threaded plugs, pre-stage gears (Z)

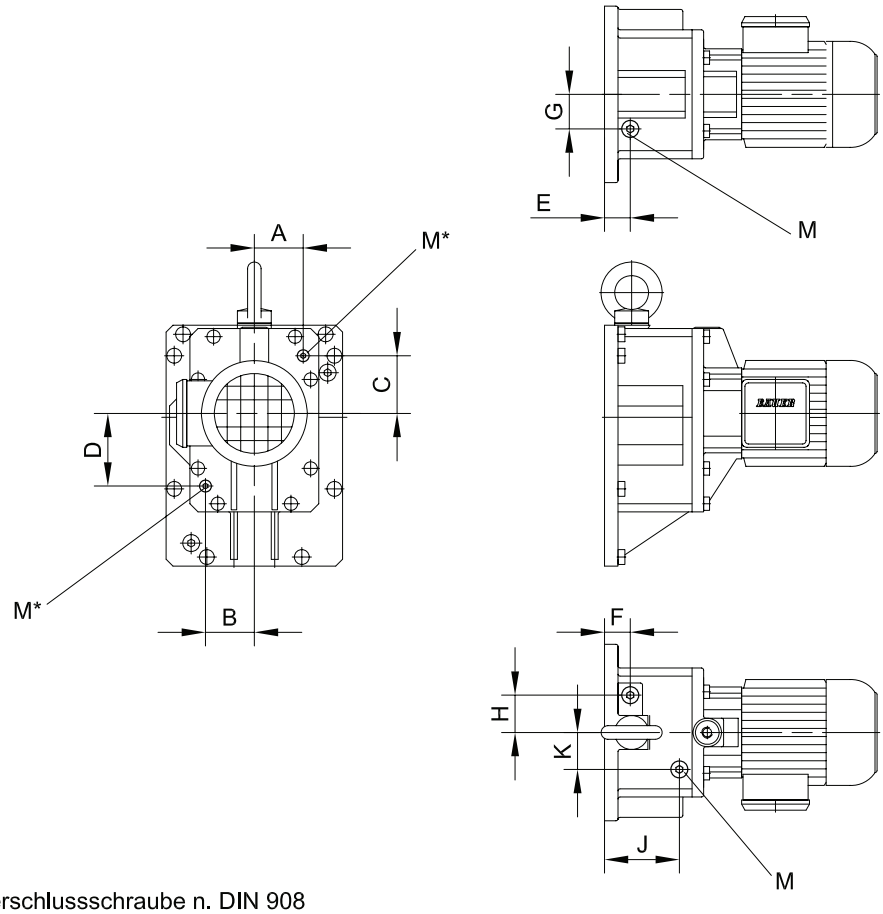

M = Verschlussschraube n. DIN 908

Getriebe	A	B	C	D	E	F	G	H	J	K	M
BG10(Z);BK10(Z); BF10(Z);BS10(Z)	-	-	-	-	25	-	17.5	-	44	25	M10x1
BG20(Z);BK20(Z); BF20(Z);BS20(Z)	-	-	-	-	49	-	28.5	-	23.5	28	M10x1
BG30(Z);BK30(Z); BF30(Z): BS30(Z)	siehe Lage der Verschlussschrauben auf dem Systemdeckel	Tab.I u. II Größe B.10			-	24	-	30	-	-	M10x1
BG40(Z);BK40(Z); BF40(Z); BS40(Z)		Tab.I u. II Größe B.20			-	27.5	-	36.5	-	-	M14x1.5
BG50(Z);BK50(Z); BF50(Z)		Tab.I u. II Größe B.30			-		-	-	29	43	M14x1.5
BG60(Z);BK60(Z); BF60(Z)		Tab.I u. II Größe B.40			-	33	-	48	-	-	M20x1.5
BG70(Z);BK70(Z); BF70(Z);BF80(Z)		Tab.I u. II Größe B.50			-	38	-	55	-	-	M20x1.5
BG80(Z);BK80(Z); BF90(Z);BG100(Z)		Tab.I u. II Größe B.60			-	45	-	73	-	-	M20x1.5
BG90(Z);BK90(Z)		Tab.I u. II Größe B.70			-	45	-	62	-	-	M24x1.5

M* =Factor and position of the drain plug see page 77.

Position of the grease nipple for gearbox designs with Input Coupling - C

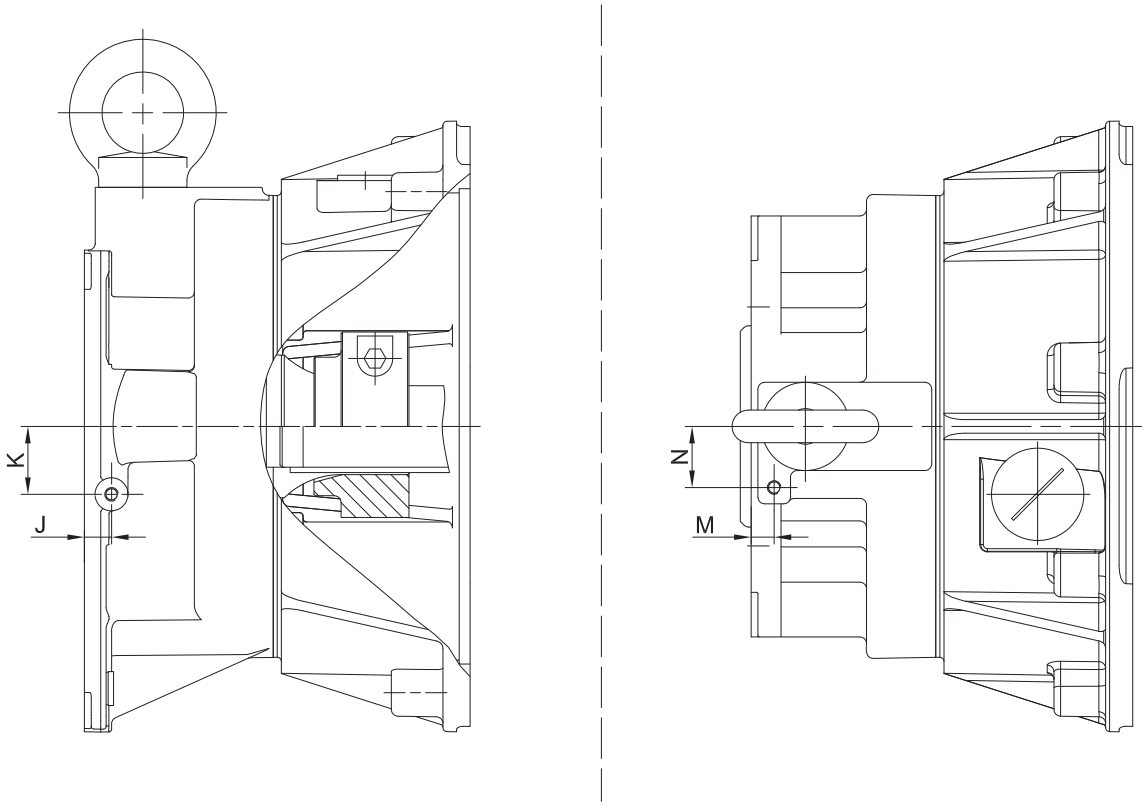

Q: Schmiernippel

DIN 3404-AM10x1,5

Getriebe	J	K	M	N
BG10(Z); BK10(Z); BF10(Z); BS10(Z)	-	-	-	-
BG20(Z); BK20(Z); BF20(Z); BS20(Z)	-	-	-	-
BG30(Z); BK30(Z); BF30(Z); BS30(Z)	-	-	-	-
BG40(Z); BK40(Z); BF40(Z); BS40(Z);	-	-	-	-
BG50(Z); BK50(Z); BF50(Z)	-	-	-	-
BG60(Z); BK60(Z); BF60(Z)	-	-	-	-
BG70(Z); BK70(Z); BF70(Z); BF80(Z)	20	50	-	-
BG80(Z); BK80(Z); BF90(Z); BG100(Z)	-	-	17	45
BG90(Z); BK90(Z)	-	-	17	45

Threaded plugs

Position of the grease nipple for gearbox designs with Input Shaft - SN

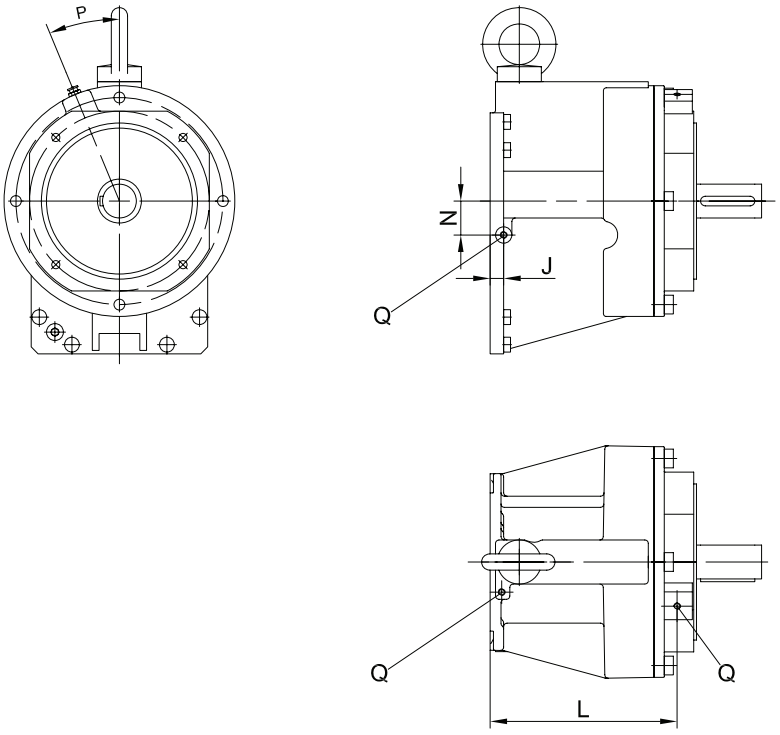

Q: Schmiernippel

DIN 3404-AM10x1,5

Getriebe	J	K	L	N	O	P
BK06; BS06	-	-	-	-	-	-
BG10(Z); BK10(Z); BF10(Z); BS10(Z)	-	-	-	-	-	-
BG20(Z); BK20(Z); BF20(Z); BS20(Z)	-	-	-	-	-	-
BG30(Z); BK30(Z); BF30(Z); BS30(Z)	-	-	-	-	-	-
BG40(Z); BK40(Z); BF40(Z); BS40(Z)	-	-	-	-	-	-
BG50(Z); BK50(Z); BF50(Z)	-	-	-	-	-	-
BG60(Z); BK60(Z); BF60(Z)	-	-	-	-	-	-
BG70(Z); BK70(Z); BF70(Z); BF80(Z)	20	-	277.5	50	-	22.5°
BG80(Z); BK80(Z); BF90(Z); BG100(Z)	-	17	274.5	-	44.5	22.5°
BG90(Z); BK90(Z)	-	17	274.5	-	44.5	22.5°

**Position of the drain plugs in the System Cover
Design with Standard Geared Motor**

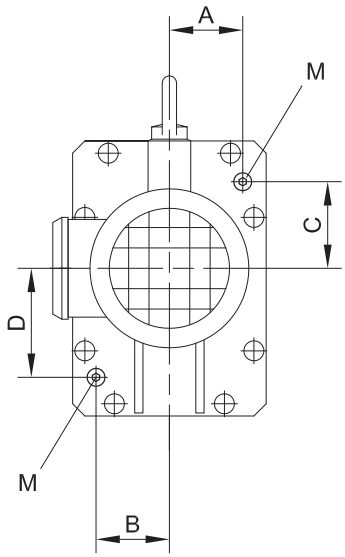

M = Verschlussschraube n. DIN 908

Getriebe	Grösse	A	B	C	D	M
BG10(Z); BK10(Z); BF10(Z); BS10(Z)	D05-D..09	36	34	43.5	59	M10x1
BG20(Z); BK20(Z); BF20(Z); BS20(Z)	D05-D..09	44	44	58	72.5	M10x1
BG30(Z); BK30(Z); BF30(Z); BS30(Z)	D05-D..09	56.5	40	58.2	75	M10x1
BG40(Z); BK40(Z); BF40(Z); BS40(Z)	D..08-D..11	66	71	71	94	M14x1.5
BG50(Z); BK50(Z); BF50(Z)	D..08-D..11	72	74	85	109	M14x1.5
	D..13-D..16	78	74	82	109	M14x1.5
BG60(Z); BK60(Z); BF60(Z)	D..09-D..13	84	81	120	155	M20x1.5
	D..16	86	81	120	155	M20x1.5
BG70(Z); BK70(Z); BF70(Z); BF80(Z)	D..09-D..18	95	85	97	193	M20x1.5
BG80(Z); BK80(Z); BF90(Z); BG100(Z)	D..11-D..18	118	118	110	245	M20x1.5
BG90(Z); BK90(Z)	D..13-D..18	145	145	116	294	M24x1.5

Position of the drain plugs for BG, BK, BS and BF gear ranges and pre-stages.

Threaded plugs

Position of the drain plugs in the System Cover
Design with foreign motor or as gear design with input shaft

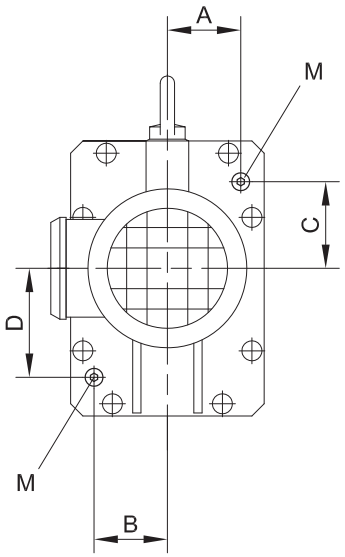

M = Verschlussschraube n. DIN 908

Getriebe	A	B	C	D	M
BG10(Z); BK10(Z); BF10(Z); BS10(Z)	34	34	40.5	57	M10x1
BG20(Z); BK20(Z); BF20(Z); BS20(Z)	44	44	57	72	M10x1
BG30(Z); BK30(Z); BF30(Z); BS30(Z)	58.5	41	57.6	77	M10x1
BG40(Z); BK40(Z); BF40(Z); BS40(Z);	69	73	70	97	M14x1.5
BG50(Z); BK50(Z); BF50(Z)	75	75	82	110	M14x1.5
BG60(Z); BK60(Z); BF60(Z)	84	81	119	155	M20x1.5
BG70(Z); BK70(Z); BF70(Z); BF80(Z)	96	95	96	193	M20x1.5
BG80(Z); BK80(Z); BF90(Z); BG100(Z)	118	118	110	245	M20x1.5
BG90(Z); BK90(Z)	145	145	116	294	M24x1.5

Position of the drain plugs for BG, BK, BS and BF gear ranges and pre-stages.

**Position of the drain plugs in the System Cover
Design with pre-stage Z**

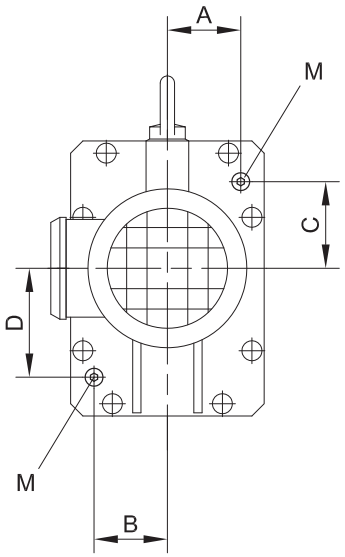

M = Verschlussschraube n. DIN 908

Getriebe	A	B	C	D	M
B.10	38	39.5	44	61.5	M10x1
B.20	44	44	58	72	M10x1
B.30	59	42	58.2	77	M10x1
B.40	66	71	71	96	M14x1.5
B.50	72	73	85	111	M14x1.5
B.60	85	81	120	192	M20x1.5
B.70	95	95	97	193	M20x1.5
B.80	118	118	110	245	M20x1.5
B.90	139	139	124	302	M24x1.5

Position of the drain plugs for BG, BK, BS and BF gear ranges and pre-stages.

6

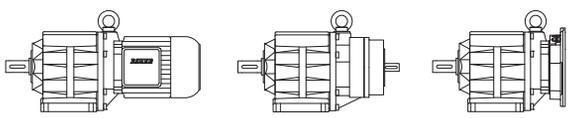

Page

BG-series helical-geared motors **81-190**
Selection

Description of helical-geared units
- Sizes
- Bauer service factors (f_B) for helical-geared motors
- Continuous operation without switching frequency Z ≤1/h
- Switching duty
- Bauer service factor
- Explanation of shock classification
- Key to abbreviations
- Selection tables, helical-geared motors

Selection - Helical Geared Motors IE1
Selection - Helical Geared Motors IE2
Selection - Helical gearbox with SN input
Selection - Helical gearbox with C-Coupling

BG-series helical-geared motors

Description of helical-geared units

Sizes

Bauer BG-series helical-geared motors are available in 13 standard sizes with torques from 20 Nm to 18,500 Nm. Higher torques are available on request. The geared unit is accommodated in a sturdy cast housing.

Bauer service factors (f_B) for helical- geared motors

Of the numerous factors influencing the total loading of a geared unit, the most important include:

- Mean torque (rated torque)
- Daily operating hours
- Severity of torque peaks (shock classification)
- Frequency of torque peaks (switching duty)

These factors can be represented in a simplified and practical manner by *service factors*. The tables and explanations below aim to provide an objective description of the *shock classification*, rather than a classification of the driven machinery. Experience has shown that, in addition to the torque shocks caused by the driven machinery (M_x/M_N), above all the power transmission components (clutches, chains etc.) plus the mass ratios play a decisive role in this.

See Bauer special imprint SD32 for more information (available on request).

Continuous operation without switchingfrequency Z ≤1/h

Factor f_1 for shock classification and operating time

Shock classification	Operating hours per day t_d	>4 h	>8 h	>16 h
		≤8 h	≤16 h	≤24 h
I		0,8	1,0	1,2
II		1,05	1,25	1,45
III		1,45	1,55	1,7

Switching duty

Factor f_2 for shock classification and switching frequency

Switching frequency in single-shift operation t_d ≤8 h/d

Shock classification	1 <Z ≤100	100 <Z ≤1000	1000 <Z
I	0,95	1,1	1,15
II	1,2	1,35	1,4
III	1,55	1,6	1,6

Switching frequency in multiple-shift operation t_d >8 h/d

Shock classification	1 <Z ≤100	100 <Z ≤1000	1000 <Z
I	1,3	1,45	1,5
II	1,5	1,6	1,65
III	1,75	1,8	1,8

Bauer service factor

Bauer service factor $f_B = f_1$ or $f_B = f_2$

For example: Shock classification II for Z = 100 switching operations per hour and multiple-shift operation yields a service factor $f_B = f_2 = 1.5$

Explanation of shock classification

Shock classification I:
Uniform without shock loads. All the following requirements must be satisfied:
- FI ≤1,3
- M_x/M_N ≤1,0
- Shock-absorbing power transmission components (e.g. highly resilient, zero-play coupling, φ N≥ 5°)

Shock classification II:
Moderate shock loads. At least one of the following conditions applies:
- 1,3 <FI ≤4
- 1 <M_x/M_N ≤1,6
- Shock-neutral power transmission components (e.g. gear wheels, zero- play rigid coupling or resilient coupling with φ N <5°)

Shock classification III:
Heavy shock loads. At least one of the following conditions applies:
- FI >4
- 1,6 <M_x/M_N ≤2,0
- Shock-amplifying power transmission components (e.g. coupling with play or chain drive)

Key to abbreviations

Z	Switching duty number of switching operations per hour
t_d	Daily operating time in hours (h/d)
FI	Factor of inertia FI = $(J_{ext} + J_{rot})/J_{rot}$
J_{ext}	Mass moment of inertia of the machine to be driven, in relation to the motor's rotor shaft (kgm^2)
J_{rot}	Mass moment of inertia of the motor rotor (kgm^2)
M_x	Highest impact torque above the static torque which can occur during normal operation or in emergency situations
M_N	Required static load torque for the application
M_x/M_N	Relative torque - Factor
φ_N	Torsional offset of the resilient coupling under rated torque

Selection tables, helical-geared motors

Key to abbreviations

P	Rated output Power
n_2	Rated speed of the output shaft
i	Gear reduction ratio
M_2	Rated torque at the output shaft
f_B	Bauer service factor
F_{RN}	Maximum permissible radial force with a standard solid shaft (Code -.1 and -.7)
F_{RV}	Maximum permissible radial force with reinforced bearings in each case with standard solid shaft (Code -.1 and -.7)

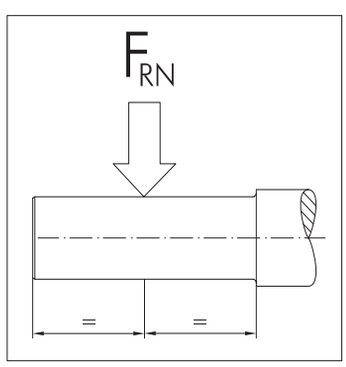

Use the selection tables to determine the size of geared motor required. The codes clearly define the Type of gear (see chapter 10 "dimensional drawings, helical-geared motors").

The torques marked (*) are maximum permissible torques for service factor f_B=1,0.

Motor power overload protection
Motor-power ratings, particularly in conjunction with four-stage and multi-stage gear units, are more than ample in some instances. Consequently, and in much the same way as with low-power motors, rated current is not a measure of gear loading and cannot be used to protect the gear unit against overloading. It is advisable to provide gears at risk from excessive load or blockage with a protective mechanism (e. g., slip clutch, slip hub, shear pin or an alternative).

BG-series helical-geared motors

Selection helical-geared motors DSE -IE1

P = 0.03 kW

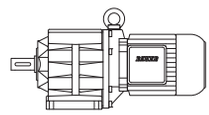

50 Hz			i	Type	m	F_{RN}	F_{RV}	60 Hz		
n_2	M_2	f_B						n_2	M_2	f_B
1/min	Nm				kg	N	N	1/min	Nm	
540	**0.53**	**7.5**	2.51	**BG04-../D04LA4**	4.4	340	-	650	0.44	9.1
370	**0.77**	**6.5**	3.65	"	"	390	-	445	0.64	7.8
310	**0.92**	**7.6**	4.39	"	"	380	-	370	0.77	9.1
255	**1.12**	**8.0**	5.36	"	"	380	-	305	0.93	9.7
205	**1.39**	**7.2**	6.67	"	"	410	-	245	1.16	8.6
158	**1.81**	**6.1**	8.58	"	"	410	-	189	1.51	7.3
150	**1.91**	**6.3**	9.00	"	"	470	-	180	1.59	7.5
137	**2.05**	**6.3**	9.90	"	"	480	-	164	1.74	7.5
125	**2.25**	**6.2**	10.82	"	"	480	-	150	1.91	7.3
114	**2.5**	**6.0**	11.90	"	"	490	-	137	2.05	7.3
108	**2.65**	**5.7**	12.55	"	"	490	-	130	2.2	6.8
103	**2.75**	**5.8**	13.20	"	"	500	-	123	2.3	7.0
93	**3.05**	**5.6**	14.52	"	"	510	-	112	2.55	6.7
83	**3.45**	**5.2**	16.44	"	"	530	-	99	2.85	6.3
75	**3.8**	**4.7**	18.08	"	"	540	-	90	3.15	5.7
64	**4.45**	**4.3**	21.12	"	"	560	-	77	3.7	5.1
59	**4.85**	**4.1**	23.23	"	"	600	-	70	4.05	4.9
56	**5.1**	**3.9**	24.45	"	"	610	-	67	4.25	4.7
51	**5.6**	**3.6**	26.89	"	"	650	-	61	4.65	4.3
44	**6.5**	**3.1**	30.91	"	"	690	-	53	5.4	3.7
40	**7.1**	**2.8**	34.00	"	"	720	-	48	5.9	3.4
38.5	**7.4**	**2.7**	35.35	"	"	730	-	46	6.2	3.2
35	**8.1**	**2.5**	38.89	"	"	750	-	42	6.8	2.9
32	**8.9**	**2.2**	42.24	"	"	750	-	38.5	7.4	2.7
29.5	**9.7**	**2.1**	46.47	"	"	750	-	35	8.1	2.5
28.5	**10**	**2.0**	47.52	"	"	750	-	34.5	8.3	2.4
26	**11**	**1.8**	52.28	"	"	750	-	31	9.2	2.2
25	**11.4**	**1.75**	54.97	"	"	750	-	29.5	9.7	2.1
22.5	**12.7**	**1.55**	60.47	"	"	750	-	27	10.6	1.9
31	**9.2**	**3.3**	43.57	**BG05-../D04LA4**	5.1	900	-	37.5	7.6	3.9
29	**9.8**	**3.1**	47.00	"	"	930	-	34.5	8.3	3.6
26.5	**10.8**	**2.8**	51.27	"	"	970	-	32	8.9	3.4
25.5	**11.2**	**2.7**	53.44	"	"	980	-	30.5	9.3	3.2
23.5	**12.1**	**2.5**	58.30	"	"	1000	-	28	10.2	2.9
20.5	**13.9**	**3.2**	66.79	**BG06-../D04LA4**	6.1	1070	-	24.5	11.6	3.9
18	**13.8**	**2.9**	75.99	**BG06G04-../D04LA4**	8.4	1070	-	21.5	11.2	3.6
16.5	**15**	**2.9**	82.89	"	"	1070	-	20	12	3.6
15	**16.5**	**2.7**	93.00	"	"	1070	-	17.5	13.8	3.3
13.5	**18.4**	**2.4**	101.5	"	"	1070	-	16	15.1	3.0
11.5	**21**	**2.1**	122.0	"	"	1070	-	13.5	17.3	2.6
9.1	**26**	**1.75**	149.0	"	"	1070	-	11	21	2.1
7.3	**33.5**	**1.35**	185.4	"	"	1070	-	8.8	26.5	1.7
5.4	**46**	**0.98**	250.2	"	"	1070	-	6.5	37	1.2
5.0	**50**	**0.9**	275.2	"	"	1070	-	5.9	41	1.1
4.1	**45***	**1.0**	330.8	"	"	1070	-	4.9	45	1.0
3.7	**45***	**1.0**	367.0	"	"	1070	-	4.5	45	1.0
3.0	**45***	**1.0**	457.0	"	"	1070	-	3.6	45	1.0
2.7	**45***	**1.0**	502.6	"	"	1070	-	3.3	45	1.0
2.3	**45***	**1.0**	587.1	"	"	1070	-	2.8	45	1.0
2.1	**45***	**1.0**	645.8	"	"	1070	-	2.6	45	1.0
1.9	**45***	**1.0**	747.5	"	"	1070	-	2.2	45	1.0
1.6	**45***	**1.0**	859.3	"	"	1070	-	1.9	45	1.0
1.5	**45***	**1.0**	945.2	"	"	1070	-	1.8	45	1.0
1.3	**45***	**1.0**	1081	"	"	1070	-	1.5	45	1.0
1.2	**45***	**1.0**	1174	"	"	1070	-	1.4	45	1.0
1.1	**45***	**1.0**	1321	"	"	1070	-	1.3	45	1.0
0.9	**45***	**1.0**	1528	"	"	1070	-	1.1	45	1.0
0.85	**45***	**1.0**	1681	"	"	1070	-	1.0	45	1.0
0.7	**45***	**1.0**	1948	"	"	1070	-	0.85	45	1.0
0.65	**45***	**1.0**	2126	"	"	1070	-	0.8	45	1.0
0.6	**45***	**1.0**	2435	"	"	1070	-	0.7	45	1.0

P = 0.03 kW

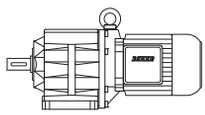

50 Hz			i	Type	m	F_{RN}	F_{RV}	60 Hz		
n_2	M_2	f_B						n_2	M_2	f_B
1/min	Nm				kg	N	N	1/min	Nm	
7.4	**38.5**	**3.1**	184.0	**BG10Z-../D04LA4**	11	2000	2800	8.9	32	3.8
7.0	**40.5**	**3.0**	194.6	"	"	2000	2800	8.4	34	3.5
6.3	**45**	**2.7**	215.7	"	"	2000	2800	7.6	37.5	3.2
5.7	**50**	**2.4**	240.4	"	"	2000	2800	6.8	42	2.9
5.1	**56**	**2.1**	266.3	"	"	2000	2800	6.1	46.5	2.6
4.9	**58**	**2.1**	276.0	"	"	2000	2800	5.9	48.5	2.5
4.5	**63**	**1.9**	305.8	"	"	2000	2800	5.3	54	2.2
3.6	**49**	**2.7**	379.6	**BG10G06-../D04LA4**	14	2000	2800	4.3	36	3.6
3.1	**57**	**2.3**	435.9	"	"	2000	2800	3.8	40	3.3
2.7	**68**	**1.9**	512.6	"	"	2000	2800	3.2	51	2.5
2.3	**83**	**1.55**	613.6	"	"	2000	2800	2.7	65	2.0
1.9	**105**	**1.25**	748.9	"	"	2000	2800	2.2	84	1.55
1.6	**130**	**1.0**	899.5	"	"	2000	2800	1.9	102	1.25
1.3	**130***	**1.0**	1081	"	"	2000	2800	1.5	130	1.0
1.1	**130***	**1.0**	1272	"	"	2000	2800	1.3	130	1.0
0.9	**130***	**1.0**	1523	"	"	2000	2800	1.1	130	1.0
0.75	**130***	**1.0**	1863	"	"	2000	2800	0.9	130	1.0
0.6	**130***	**1.0**	2356	"	"	2000	2800	0.7	130	1.0
0.55	**130***	**1.0**	2699	"	"	2000	2800	0.65	130	1.0
0.46	**130***	**1.0**	2944	"	"	2000	2800	0.6	130	1.0
0.4	**130***	**1.0**	3378	"	"	2000	2800	0.48	130	1.0
0.37	**130***	**1.0**	3684	"	"	2000	2800	0.44	130	1.0
0.31	**130***	**1.0**	4477	"	"	2000	2800	0.37	130	1.0
0.28	**130***	**1.0**	4884	"	"	2000	2800	0.34	130	1.0
2.5	**77**	**2.9**	550.6	**BG20G06-../D04LA4**	17	5000	-	3.0	58	3.8
2.1	**95**	**2.3**	671.9	"	"	5000	-	2.5	73	3.0
1.7	**125**	**1.75**	807.1	"	"	5000	-	2.1	93	2.4
1.4	**160**	**1.4**	969.9	"	"	5000	-	1.7	123	1.8
1.2	**188**	**1.15**	1142	"	"	5000	-	1.5	141	1.55
1.0	**230**	**0.96**	1366	"	"	5000	-	1.2	186	1.2
0.85	**220***	**1.0**	1672	"	"	5000	-	1.0	220	1.0
0.75	**220***	**1.0**	1824	"	"	5000	-	0.9	220	1.0
0.65	**220***	**1.0**	2114	"	"	5000	-	0.8	220	1.0
0.6	**220***	**1.0**	2422	"	"	5000	-	0.7	220	1.0
0.55	**220***	**1.0**	2642	"	"	5000	-	0.65	220	1.0
0.45	**220***	**1.0**	3031	"	"	5000	-	0.55	220	1.0
0.41	**220***	**1.0**	3306	"	"	5000	-	0.5	220	1.0
0.34	**220***	**1.0**	4017	"	"	5000	-	0.41	220	1.0
0.31	**220***	**1.0**	4383	"	"	5000	-	0.37	220	1.0
2.0	**101**	**3.2**	690.6	**BG30G06-../D04LA4**	21	6000	-	2.4	77	4.2
1.8	**116**	**2.8**	760.7	"	"	6000	-	2.2	87	3.7
1.7	**124**	**2.6**	829.5	"	"	6000	-	2.0	98	3.3
1.4	**158**	**2.1**	996.8	"	"	6000	-	1.7	122	2.7
1.3	**173**	**1.9**	1088	"	"	6000	-	1.5	143	2.3
1.1	**205**	**1.6**	1280	"	"	6000	-	1.3	166	1.95
1.0	**230**	**1.4**	1404	"	"	6000	-	1.2	184	1.75
0.8	**295**	**1.1**	1718	"	"	6000	-	0.95	240	1.35
0.75	**320**	**1.0**	1875	"	"	6000	-	0.9	255	1.25
0.65	**325***	**1.0**	2173	"	"	6000	-	0.75	325	1.0
0.5	**325***	**1.0**	2715	"	"	6000	-	0.6	325	1.0
0.44	**325***	**1.0**	3115	"	"	6000	-	0.55	325	1.0
0.4	**325***	**1.0**	3398	"	"	6000	-	0.48	325	1.0
0.35	**325***	**1.0**	3867	"	"	6000	-	0.42	325	1.0
0.3	**325***	**1.0**	4504	"	"	6000	-	0.36	325	1.0

BG-series helical-geared motors

Selection helical-geared motors DSE -IE1

P = 0.04 kW

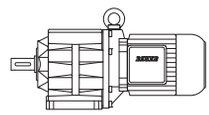

50 Hz			i	Type	m	F_{RN}	F_{RV}	60 Hz		
n_2	M_2	f_B						n_2	M_2	f_B
1/min	Nm				kg	N	N	1/min	Nm	
540	**0.7**	**5.7**	2.51	**BG04-../D04LA4**	4.4	340	-	650	0.58	6.9
370	**1.03**	**4.9**	3.65	"	"	390	-	445	0.85	5.9
310	**1.23**	**5.7**	4.39	"	"	380	-	370	1.03	6.8
255	**1.49**	**6.0**	5.36	"	"	380	-	305	1.25	7.2
205	**1.86**	**5.4**	6.67	"	"	410	-	245	1.55	6.5
158	**2.4**	**4.6**	8.58	"	"	410	-	189	2.0	5.5
150	**2.5**	**4.8**	9.00	"	"	470	-	180	2.1	5.7
137	**2.75**	**4.7**	9.90	"	"	480	-	164	2.3	5.7
125	**3.05**	**4.6**	10.82	"	"	480	-	150	2.5	5.6
114	**3.35**	**4.5**	11.90	"	"	490	-	137	2.75	5.5
108	**3.5**	**4.3**	12.55	"	"	490	-	130	2.9	5.2
103	**3.7**	**4.3**	13.20	"	"	500	-	123	3.1	5.2
93	**4.1**	**4.1**	14.52	"	"	510	-	112	3.4	5.0
83	**4.6**	**3.9**	16.44	"	"	530	-	99	3.85	4.7
75	**5.0**	**3.6**	18.08	"	"	540	-	90	4.2	4.3
64	**5.9**	**3.2**	21.12	"	"	560	-	77	4.95	3.8
59	**6.4**	**3.1**	23.23	"	"	600	-	70	5.4	3.7
56	**6.8**	**2.9**	24.45	"	"	610	-	67	5.7	3.5
51	**7.4**	**2.7**	26.89	"	"	650	-	61	6.2	3.2
44	**8.6**	**2.3**	30.91	"	"	690	-	53	7.2	2.8
40	**9.5**	**2.1**	34.00	"	"	720	-	48	7.9	2.5
38.5	**9.9**	**2.0**	35.35	"	"	730	-	46	8.3	2.4
35	**10.9**	**1.85**	38.89	"	"	750	-	42	9.0	2.2
32	**11.9**	**1.7**	42.24	"	"	750	-	38.5	9.9	2.0
29.5	**12.9**	**1.55**	46.47	"	"	750	-	35	10.9	1.85
28.5	**13.4**	**1.5**	47.52	"	"	750	-	34.5	11	1.8
26	**14.6**	**1.35**	52.28	"	"	750	-	31	12.3	1.65
25	**15.2**	**1.3**	54.97	"	"	750	-	29.5	12.9	1.55
22.5	**16.9**	**1.2**	60.47	"	"	750	-	27	14.1	1.4
39	**9.7**	**3.1**	35.00	**BG05-../D04LA4**	5.1	810	-	46.5	8.2	3.7
35.5	**10.7**	**2.8**	38.18	"	"	850	-	42.5	8.9	3.4
34	**11.2**	**2.7**	39.94	"	"	860	-	41	9.3	3.2
31	**12.3**	**2.4**	43.57	"	"	900	-	37.5	10.1	3.0
29	**13.1**	**2.3**	47.00	"	"	930	-	34.5	11	2.7
26.5	**14.4**	**2.1**	51.27	"	"	970	-	32	11.9	2.5
25.5	**14.9**	**2.0**	53.44	"	"	980	-	30.5	12.5	2.4
23.5	**16.2**	**1.85**	58.30	"	"	1000	-	28	13.6	2.2
27	**14.1**	**3.2**	50.38	**BG06-../D04LA4**	6.1	940	-	32.5	11.7	3.8
26	**14.6**	**3.1**	52.56	"	"	950	-	31	12.3	3.7
24	**15.9**	**2.8**	57.34	"	"	1000	-	28.5	13.4	3.4
22.5	**16.9**	**2.7**	61.22	"	"	1020	-	26.5	14.4	3.1
20.5	**18.6**	**2.4**	66.79	"	"	1070	-	24.5	15.5	2.9
18	**19.1**	**2.1**	75.99	**BG06G04-../D04LA4**	8.4	1070	-	21.5	15.6	2.6
16.5	**20.5**	**2.1**	82.89	"	"	1070	-	20	16.8	2.6
15	**22.5**	**2.0**	93.00	"	"	1070	-	17.5	19.2	2.3
13.5	**25.5**	**1.75**	101.5	"	"	1070	-	16	21	2.1
11.5	**29**	**1.55**	122.0	"	"	1070	-	13.5	24	1.9
9.1	**36.5**	**1.25**	149.0	"	"	1070	-	11	29.5	1.55
7.3	**46.5**	**0.97**	185.4	"	"	1070	-	8.8	37.5	1.2
10.5	**36**	**3.3**	131.8	**BG10Z-../D04LA4**	11	2000	2800	12.5	30.5	3.9
9.3	**41**	**2.9**	146.0	"	"	2000	2800	11.5	33	3.6
8.2	**46.5**	**2.6**	166.0	"	"	2000	2800	9.8	38.5	3.1
7.4	**51**	**2.4**	184.0	"	"	2000	2800	8.9	42.5	2.8
7.0	**54**	**2.2**	194.6	"	"	2000	2800	8.4	45	2.7
6.3	**60**	**2.0**	215.7	"	"	2000	2800	7.6	50	2.4
5.7	**67**	**1.8**	240.4	"	"	2000	2800	6.8	56	2.1
5.1	**74**	**1.6**	266.3	"	"	2000	2800	6.1	62	1.95
4.9	**77**	**1.55**	276.0	"	"	2000	2800	5.9	64	1.9
4.5	**84**	**1.45**	305.8	"	"	2000	2800	5.3	72	1.65

P = 0.04 kW

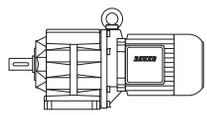

50 Hz			i	Type	m	F_{RN}	F_{RV}	60 Hz		
n_2	M_2	f_B						n_2	M_2	f_B
1/min	Nm				kg	N	N	1/min	Nm	
4.1	**60**	**2.2**	332.0	**BG10G06-../D04LA4**	14	2000	2800	4.9	45.5	2.9
3.6	**75**	**1.75**	379.6	"	"	2000	2800	4.3	58	2.2
3.1	**88**	**1.5**	435.9	"	"	2000	2800	3.8	65	2.0
2.7	**103**	**1.25**	512.6	"	"	2000	2800	3.2	81	1.6
2.3	**125**	**1.05**	613.6	"	"	2000	2800	2.7	100	1.3
1.9	**155**	**0.84**	748.9	"	"	2000	2800	2.2	128	1.0
6.1	**62**	**3.2**	222.1	**BG20Z-../D04LA4**	13	5000	-	7.3	52	3.8
3.9	**69**	**3.2**	352.1	**BG20G06-../D04LA4**	17	5000	-	4.7	52	4.2
3.5	**77**	**2.9**	391.1	"	"	5000	-	4.2	59	3.7
3.0	**93**	**2.4**	460.0	"	"	5000	-	3.6	71	3.1
2.5	**116**	**1.9**	550.6	"	"	5000	-	3.0	90	2.4
2.1	**141**	**1.55**	671.9	"	"	5000	-	2.5	112	1.95
1.7	**181**	**1.2**	807.1	"	"	5000	-	2.1	138	1.6
1.4	**225**	**0.98**	969.9	"	"	5000	-	1.7	180	1.2
1.2	**265**	**0.83**	1142	"	"	5000	-	1.5	200	1.1
2.4	**121**	**2.7**	565.8	**BG30G06-../D04LA4**	21	6000	-	2.9	93	3.5
2.0	**149**	**2.2**	690.6	"	"	6000	-	2.4	117	2.8
1.8	**169**	**1.9**	760.7	"	"	6000	-	2.2	130	2.5
1.7	**180**	**1.8**	829.5	"	"	6000	-	2.0	146	2.2
1.4	**225**	**1.45**	996.8	"	"	6000	-	1.7	178	1.85
1.3	**245**	**1.35**	1088	"	"	6000	-	1.5	205	1.6
1.1	**290**	**1.1**	1280	"	"	6000	-	1.3	235	1.4
1.0	**325**	**1.0**	1404	"	"	6000	-	1.2	260	1.25

P = 0.06 kW

50 Hz			i	Type	m	F_{RN}	F_{RV}	60 Hz		
n_2	M_2	f_B						n_2	M_2	f_B
1/min	Nm				kg	N	N	1/min	Nm	
540	**1.06**	**3.8**	2.51	**BG04-../D04LA4**	4.4	340	-	650	0.88	4.5
370	**1.54**	**3.2**	3.65	"	"	390	-	445	1.28	3.9
310	**1.84**	**3.8**	4.39	"	"	380	-	370	1.54	4.5
255	**2.2**	**4.1**	5.36	"	"	380	-	305	1.87	4.8
205	**2.75**	**3.6**	6.67	"	"	410	-	245	2.3	4.3
158	**3.6**	**3.1**	8.58	"	"	410	-	189	3.0	3.7
150	**3.8**	**3.2**	9.00	"	"	470	-	180	3.15	3.8
137	**4.15**	**3.1**	9.90	"	"	480	-	164	3.45	3.8
125	**4.55**	**3.1**	10.82	"	"	480	-	150	3.8	3.7
114	**5.0**	**3.0**	11.90	"	"	490	-	137	4.15	3.6
108	**5.3**	**2.8**	12.55	"	"	490	-	130	4.4	3.4
103	**5.5**	**2.9**	13.20	"	"	500	-	123	4.65	3.4
93	**6.1**	**2.8**	14.52	"	"	510	-	112	5.1	3.3
83	**6.9**	**2.6**	16.44	"	"	530	-	99	5.7	3.2
75	**7.6**	**2.4**	18.08	"	"	540	-	90	6.3	2.9
64	**8.9**	**2.1**	21.12	"	"	560	-	77	7.4	2.6
59	**9.7**	**2.1**	23.23	"	"	600	-	70	8.1	2.5
56	**10.2**	**1.95**	24.45	"	"	610	-	67	8.5	2.4
51	**11.2**	**1.8**	26.89	"	"	650	-	61	9.3	2.2
44	**13**	**1.55**	30.91	"	"	690	-	53	10.8	1.85
40	**14.3**	**1.4**	34.00	"	"	720	-	48	11.9	1.7
38.5	**14.8**	**1.35**	35.35	"	"	730	-	46	12.4	1.6
35	**16.3**	**1.25**	38.89	"	"	750	-	42	13.6	1.45
32	**17.9**	**1.1**	42.24	"	"	750	-	38.5	14.8	1.35
29.5	**19.4**	**1.05**	46.47	"	"	750	-	35	16.3	1.25
28.5	**20**	**1.0**	47.52	"	"	750	-	34.5	16.6	1.2
26	**22**	**0.91**	52.28	"	"	750	-	31	18.4	1.1
25	**22.5**	**0.89**	54.97	"	"	750	-	29.5	19.4	1.05
22.5	**25**	**0.8**	60.47	"	"	750	-	27	21	0.95

BG-series helical-geared motors

Selection helical-geared motors DSE -IE1

P = 0.06 kW

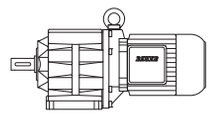

50 Hz			i	Type	m	F_{RN}	F_{RV}	60 Hz		
n_2	M_2	f_B						n_2	M_2	f_B
1/min	Nm				kg	N	N	1/min	Nm	
72	**7.9**	**3.3**	18.82	**BG05-../D04LA4**	5.1	680	-	87	6.5	4.0
66	**8.6**	**3.1**	20.53	"	"	700	-	79	7.2	3.8
57	**10**	**2.8**	24.00	"	"	740	-	68	8.4	3.3
52	**11**	**2.6**	26.18	"	"	760	-	62	9.2	3.2
49	**11.6**	**2.6**	27.82	"	"	770	-	59	9.7	3.1
44.5	**12.8**	**2.3**	30.35	"	"	760	-	54	10.6	2.8
39	**14.6**	**2.1**	35.00	"	"	810	-	46.5	12.3	2.4
35.5	**16.1**	**1.85**	38.18	"	"	850	-	42.5	13.4	2.2
34	**16.8**	**1.8**	39.94	"	"	860	-	41	13.9	2.2
31	**18.4**	**1.65**	43.57	"	"	900	-	37.5	15.2	1.95
29	**19.7**	**1.5**	47.00	"	"	930	-	34.5	16.6	1.8
26.5	**21.5**	**1.4**	51.27	"	"	970	-	32	17.9	1.7
25.5	**22**	**1.35**	53.44	"	"	980	-	30.5	18.7	1.6
23.5	**24**	**1.25**	58.30	"	"	1000	-	28	20	1.5
42	**13.6**	**3.3**	32.22	**BG06-../D04LA4**	6.1	890	-	51	11.2	4.0
38.5	**14.8**	**3.0**	35.15	"	"	880	-	46.5	12.3	3.7
37	**15.4**	**2.9**	36.91	"	"	890	-	44	13	3.5
34	**16.8**	**2.7**	40.26	"	"	890	-	40.5	14.1	3.2
29.5	**19.4**	**2.3**	46.19	"	"	890	-	35.5	16.1	2.8
27	**21**	**2.1**	50.38	"	"	940	-	32.5	17.6	2.6
26	**22**	**2.0**	52.56	"	"	950	-	31	18.4	2.4
24	**23.5**	**1.9**	57.34	"	"	1000	-	28.5	20	2.3
22.5	**25**	**1.8**	61.22	"	"	1020	-	26.5	21.5	2.1
20.5	**27.5**	**1.65**	66.79	"	"	1070	-	24.5	23	1.95
18	**29.5**	**1.35**	75.99	**BG06G04-../D04LA4**	8.4	1070	-	21.5	24.5	1.65
16.5	**32**	**1.35**	82.89	"	"	1070	-	20	26	1.65
15	**35.5**	**1.25**	93.00	"	"	1070	-	17.5	30	1.5
13.5	**39.5**	**1.15**	101.5	"	"	1070	-	16	33	1.35
11.5	**45.5**	**0.99**	122.0	"	"	1070	-	13.5	38.5	1.15
15	**38**	**3.2**	92.19	**BG10Z-../D06LA4**	14	2000	2800	18	31.5	3.8
13.5	**42**	**2.9**	102.1	"	"	2000	2800	16	35.5	3.4
12.5	**45.5**	**2.6**	109.8	"	"	2000	2800	15	38	3.2
11.5	**49.5**	**2.4**	121.7	"	"	2000	2800	13.5	42	2.9
10.5	**54**	**2.2**	131.8	"	"	2000	2800	12.5	45.5	2.6
9.3	**61**	**1.95**	146.0	"	"	2000	2800	11.5	49.5	2.4
8.2	**69**	**1.75**	166.0	"	"	2000	2800	9.8	58	2.1
7.4	**77**	**1.55**	184.0	"	"	2000	2800	8.9	64	1.9
7.0	**81**	**1.5**	194.6	"	"	2000	2800	8.4	68	1.75
6.3	**90**	**1.35**	215.7	"	"	2000	2800	7.6	75	1.6
5.7	**100**	**1.2**	240.4	"	"	2000	2800	6.8	84	1.45
5.1	**112**	**1.05**	266.3	"	"	2000	2800	6.1	93	1.3
4.9	**116**	**1.05**	276.0	"	"	2000	2800	5.9	97	1.25
4.5	**127**	**0.94**	305.8	"	"	2000	2800	5.3	108	1.1
4.1	**107**	**1.2**	332.0	**BG10G06-../D06LA4**	18	2000	2800	4.9	84	1.55
3.6	**128**	**1.0**	379.6	"	"	2000	2800	4.3	102	1.25
3.1	**149**	**0.87**	435.9	"	"	2000	2800	3.8	115	1.15
8.4	**68**	**2.9**	162.2	**BG20Z-../D06LA4**	16	5000	-	10	57	3.5
7.5	**76**	**2.6**	180.1	"	"	5000	-	9.0	63	3.2
6.8	**84**	**2.4**	199.9	"	"	5000	-	8.2	69	2.9
6.1	**93**	**2.2**	222.1	"	"	5000	-	7.3	78	2.6
5.5	**77**	**2.9**	248.0	**BG20G06-../D06LA4**	20	5000	-	6.6	60	3.7
4.6	**95**	**2.3**	297.9	"	"	5000	-	5.5	75	2.9
3.9	**118**	**1.85**	352.1	"	"	5000	-	4.7	93	2.4
3.5	**132**	**1.65**	391.1	"	"	5000	-	4.2	104	2.1
3.0	**156**	**1.4**	460.0	"	"	5000	-	3.6	125	1.75
2.5	**192**	**1.15**	550.6	"	"	5000	-	3.0	154	1.45
2.1	**230**	**0.96**	671.9	"	"	5000	-	2.5	188	1.15
6.0	**95**	**3.2**	225.9	**BG30Z-../D06LA4**	22	6000	-	7.2	79	3.8
5.2	**110**	**2.7**	261.9	"	"	6000	-	6.2	92	3.3
4.7	**121**	**2.5**	290.5	"	"	6000	-	5.6	102	2.9

P = 0.06 kW

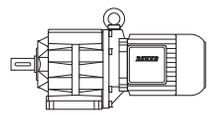

50 Hz			i	Type	m	F_{RN}	F_{RV}	60 Hz		
n_2	M_2	f_B						n_2	M_2	f_B
1/min	Nm				kg	N	N	1/min	Nm	
3.9	**118**	**2.8**	346.8	**BG30G06-../D06LA4**	25	6000	-	4.7	93	3.5
3.4	**136**	**2.4**	401.9	"	"	6000	-	4.1	107	3.0
2.9	**162**	**2.0**	472.8	"	"	6000	-	3.5	128	2.5
2.4	**200**	**1.65**	565.8	"	"	6000	-	2.9	159	2.0
2.0	**240**	**1.35**	690.6	"	"	6000	-	2.4	196	1.65
1.8	**275**	**1.2**	760.7	"	"	6000	-	2.2	215	1.5
1.7	**290**	**1.1**	829.5	"	"	6000	-	2.0	240	1.35
1.4	**360**	**0.9**	996.8	"	"	6000	-	1.7	290	1.1
1.3	**390**	**0.83**	1088	"	"	6000	-	1.5	330	0.98
2.2	**147**	**3.2**	640.0	**BG40G10-../D06LA4**	43	7000	-	2.6	107	4.3
1.9	**176**	**2.6**	710.9	"	"	7000	-	2.3	123	3.8
1.8	**179**	**2.6**	789.1	"	"	7000	-	2.1	133	3.5
1.4	**255**	**1.8**	965.2	"	"	7000	-	1.7	186	2.5
1.2	**315**	**1.5**	1225	"	"	7000	-	1.4	250	1.85
0.95	**440**	**1.05**	1459	"	"	7000	-	1.2	315	1.5
1.5	**230**	**3.0**	960.2	**BG50G10-../D06LA4**	51	10000	-	1.7	186	3.7
1.2	**315**	**2.2**	1219	"	"	10000	-	1.4	250	2.8
0.95	**445**	**1.55**	1452	"	"	10000	-	1.2	315	2.2
0.8	**550**	**1.25**	1729	"	"	10000	-	0.95	445	1.55
0.7	**660**	**1.05**	2076	"	"	10000	-	0.8	550	1.25
0.8	**445**	**2.9**	1741	**BG60G20-../D06LA4**	100	16000	-	0.95	330	3.9
0.75	**490**	**2.7**	1880	"	"	16000	-	0.9	365	3.6
0.65	**610**	**2.1**	2249	"	"	16000	-	0.75	490	2.7
0.48	**920**	**1.4**	2818	"	"	16000	-	0.6	680	1.9
0.42	**1090**	**1.2**	3234	"	"	16000	-	0.55	770	1.7
0.38	**1230**	**1.05**	3592	"	"	16000	-	0.46	970	1.35
0.49	**930**	**2.7**	2774	**BG70G20-../D06LA4**	130	20000	-	0.6	710	3.5
0.43	**1090**	**2.3**	3184	"	"	20000	-	0.55	800	3.1
0.35	**1390**	**1.8**	3925	"	"	20000	-	0.42	1120	2.2

P = 0.09 kW

50 Hz			i	Type	m	F_{RN}	F_{RV}	60 Hz		
n_2	M_2	f_B						n_2	M_2	f_B
1/min	Nm				kg	N	N	1/min	Nm	
540	**1.59**	**2.5**	2.51	**BG04-../D04LA4**	4.4	340	-	650	1.32	3.0
370	**2.3**	**2.2**	3.65	"	"	390	-	445	1.93	2.6
310	**2.75**	**2.5**	4.39	"	"	380	-	370	2.3	3.0
255	**3.35**	**2.7**	5.36	"	"	380	-	305	2.8	3.2
205	**4.15**	**2.4**	6.67	"	"	410	-	245	3.5	2.9
158	**5.4**	**2.0**	8.58	"	"	410	-	189	4.5	2.4
150	**5.7**	**2.1**	9.00	"	"	470	-	180	4.75	2.5
137	**6.2**	**2.1**	9.90	"	"	480	-	164	5.2	2.5
125	**6.8**	**2.1**	10.82	"	"	480	-	150	5.7	2.5
114	**7.5**	**2.0**	11.90	"	"	490	-	137	6.2	2.4
108	**7.9**	**1.9**	12.55	"	"	490	-	130	6.6	2.3
103	**8.3**	**1.95**	13.20	"	"	500	-	123	6.9	2.3
93	**9.2**	**1.85**	14.52	"	"	510	-	112	7.6	2.2
83	**10.3**	**1.75**	16.44	"	"	530	-	99	8.6	2.1
75	**11.4**	**1.6**	18.08	"	"	540	-	90	9.5	1.9
64	**13.4**	**1.4**	21.12	"	"	560	-	77	11.1	1.7
59	**14.5**	**1.4**	23.23	"	"	600	-	70	12.2	1.65
56	**15.3**	**1.3**	24.45	"	"	610	-	67	12.8	1.55
51	**16.8**	**1.2**	26.89	"	"	650	-	61	14	1.45
44	**19.5**	**1.05**	30.91	"	"	690	-	53	16.2	1.25
40	**21**	**0.95**	34.00	"	"	720	-	48	17.9	1.1
38.5	**22**	**0.91**	35.35	"	"	730	-	46	18.6	1.1
35	**24.5**	**0.82**	38.89	"	"	750	-	42	20	1.0

BG-series helical-geared motors

Selection helical-geared motors DSE -IE1

P = 0.09 kW

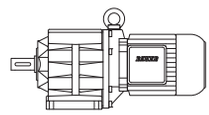

50 Hz			i	Type	m	F_{RN}	F_{RV}	60 Hz		
n_2	M_2	f_B						n_2	M_2	f_B
1/min	Nm				kg	N	N	1/min	Nm	
128	**6.7**	**3.0**	10.59	**BG05-../D04LA4**	5.1	590	-	153	5.6	3.6
117	**7.3**	**2.9**	11.55	"	"	600	-	141	6.0	3.5
113	**7.6**	**2.8**	12.05	"	"	510	-	135	6.3	3.3
108	**7.9**	**2.8**	12.60	"	"	610	-	129	6.6	3.3
99	**8.6**	**2.7**	13.75	"	"	630	-	118	7.2	3.2
89	**9.6**	**2.5**	15.23	"	"	640	-	107	8.0	3.0
82	**10.4**	**2.4**	16.62	"	"	660	-	98	8.7	2.9
72	**11.9**	**2.2**	18.82	"	"	680	-	87	9.8	2.7
66	**13**	**2.1**	20.53	"	"	700	-	79	10.8	2.5
57	**15**	**1.85**	24.00	"	"	740	-	68	12.6	2.2
52	**16.5**	**1.75**	26.18	"	"	760	-	62	13.8	2.1
49	**17.5**	**1.7**	27.82	"	"	770	-	59	14.5	2.1
44.5	**19.3**	**1.55**	30.35	"	"	760	-	54	15.9	1.9
39	**22**	**1.35**	35.00	"	"	810	-	46.5	18.4	1.65
35.5	**24**	**1.25**	38.18	"	"	850	-	42.5	20	1.5
34	**25**	**1.2**	39.94	"	"	860	-	41	20.5	1.45
31	**27.5**	**1.1**	43.57	"	"	900	-	37.5	22.5	1.35
29	**29.5**	**1.0**	47.00	"	"	930	-	34.5	24.5	1.2
26.5	**32**	**0.94**	51.27	"	"	970	-	32	26.5	1.15
25.5	**33.5**	**0.9**	53.44	"	"	980	-	30.5	28	1.05
23.5	**36.5**	**0.82**	58.30	"	"	1000	-	28	30.5	0.98
65	**13.2**	**3.0**	20.82	**BG06-../D04LA4**	6.1	800	-	78	11	3.6
60	**14.3**	**3.0**	22.71	"	"	810	-	72	11.9	3.6
53	**16.2**	**2.8**	25.48	"	"	850	-	64	13.4	3.4
49	**17.5**	**2.6**	27.80	"	"	840	-	59	14.5	3.1
42	**20**	**2.3**	32.22	"	"	890	-	51	16.8	2.7
38.5	**22**	**2.0**	35.15	"	"	880	-	46.5	18.4	2.4
37	**23**	**1.95**	36.91	"	"	890	-	44	19.5	2.3
34	**25**	**1.8**	40.26	"	"	890	-	40.5	21	2.1
29.5	**29**	**1.55**	46.19	"	"	890	-	35.5	24	1.9
27	**31.5**	**1.45**	50.38	"	"	940	-	32.5	26	1.75
26	**33**	**1.35**	52.56	"	"	950	-	31	27.5	1.65
24	**35.5**	**1.25**	57.34	"	"	1000	-	28.5	30	1.5
22.5	**38**	**1.2**	61.22	"	"	1020	-	26.5	32	1.4
20.5	**41.5**	**1.1**	66.79	"	"	1070	-	24.5	35	1.3
18	**45.5**	**0.88**	75.99	**BG06G04-../D04LA4**	8.4	1070	-	21.5	37.5	1.05
16.5	**49.5**	**0.87**	82.89	"	"	1070	-	20	40.5	1.05
15	**54**	**0.83**	93.00	"	"	1070	-	17.5	46.5	0.97
23.5	**36.5**	**3.3**	57.48	**BG10-../D06LA4**	13	2000	2800	28.5	30	4.0
21.5	**39.5**	**3.0**	63.69	"	"	2000	2800	25.5	33.5	3.6
20.5	**41.5**	**2.9**	66.00	"	"	2000	2800	25	34	3.5
18.5	**46**	**2.6**	73.13	"	"	2000	2800	22.5	38	3.2
17.5	**49**	**2.4**	77.40	**BG10Z-../D06LA4**	14	2000	2800	21	40.5	3.0
16	**53**	**2.3**	85.76	"	"	2000	2800	19	45	2.7
15	**57**	**2.1**	92.19	"	"	2000	2800	18	47.5	2.5
13.5	**63**	**1.9**	102.1	"	"	2000	2800	16	53	2.3
12.5	**68**	**1.75**	109.8	"	"	2000	2800	15	57	2.1
11.5	**74**	**1.6**	121.7	"	"	2000	2800	13.5	63	1.9
10.5	**81**	**1.5**	131.8	"	"	2000	2800	12.5	68	1.75
9.3	**92**	**1.3**	146.0	"	"	2000	2800	11.5	74	1.6
8.2	**104**	**1.15**	166.0	"	"	2000	2800	9.8	87	1.4
7.4	**116**	**1.05**	184.0	"	"	2000	2800	8.9	96	1.25
7.0	**122**	**0.98**	194.6	"	"	2000	2800	8.4	102	1.2
6.3	**136**	**0.88**	215.7	"	"	2000	2800	7.6	113	1.05
5.7	**150**	**0.8**	240.4	"	"	2000	2800	6.8	126	0.95
4.9	**146**	**0.89**	276.4	**BG10G06-../D06LA4**	18	2000	2800	5.9	116	1.1
13	**66**	**3.0**	104.7	**BG20Z-../D06LA4**	16	5000	-	15.5	55	3.6
12	**71**	**2.8**	112.8	"	"	5000	-	14.5	59	3.4
11	**78**	**2.6**	125.3	"	"	5000	-	13	66	3.0
9.6	**89**	**2.2**	141.3	"	"	5000	-	11.5	74	2.7
8.4	**102**	**1.95**	162.2	"	"	5000	-	10	85	2.4
7.5	**114**	**1.75**	180.1	"	"	5000	-	9.0	95	2.1

P = 0.09 kW

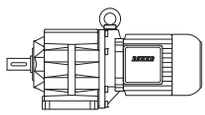

50 Hz			i	Type	m	F_{RN}	F_{RV}	60 Hz		
n_2	M_2	f_B						n_2	M_2	f_B
1/min	Nm				kg	N	N	1/min	Nm	
6.8	**126**	**1.6**	199.9	**BG20Z-../D06LA4**	"	5000	-	8.2	104	1.9
6.1	**140**	**1.45**	222.1	"	"	5000	-	7.3	117	1.7
5.5	**130**	**1.7**	248.0	**BG20G06-../D06LA4**	20	5000	-	6.6	103	2.1
4.6	**157**	**1.4**	297.9	"	"	5000	-	5.5	127	1.75
3.9	**192**	**1.15**	352.1	"	"	5000	-	4.7	154	1.45
3.5	**210**	**1.05**	391.1	"	"	5000	-	4.2	173	1.25
3.0	**250**	**0.88**	460.0	"	"	5000	-	3.6	200	1.1
9.5	**90**	**3.3**	142.5	**BG30Z-../D06LA4**	22	6000	-	11.5	74	4.1
9.0	**95**	**3.2**	151.5	"	"	6000	-	11	78	3.8
8.1	**106**	**2.8**	168.1	"	"	6000	-	9.7	88	3.4
7.4	**116**	**2.6**	182.9	"	"	6000	-	8.9	96	3.1
6.7	**128**	**2.3**	202.9	"	"	6000	-	8.0	107	2.8
6.0	**143**	**2.1**	225.9	"	"	6000	-	7.2	119	2.5
5.2	**165**	**1.8**	261.9	"	"	6000	-	6.2	138	2.2
4.7	**182**	**1.65**	290.5	"	"	6000	-	5.6	153	1.95
4.5	**161**	**2.0**	306.2	**BG30G06-../D06LA4**	25	6000	-	5.3	132	2.5
3.9	**192**	**1.7**	346.8	"	"	6000	-	4.7	154	2.1
3.4	**220**	**1.5**	401.9	"	"	6000	-	4.1	177	1.85
2.9	**260**	**1.25**	472.8	"	"	6000	-	3.5	210	1.55
2.4	**320**	**1.0**	565.8	"	"	6000	-	2.9	255	1.25
2.0	**385**	**0.84**	690.6	"	"	6000	-	2.4	315	1.05
6.1	**140**	**3.0**	221.9	**BG40Z-../D06LA4**	38	7000	-	7.4	116	3.7
5.5	**156**	**2.7**	246.5	"	"	7000	-	6.6	130	3.3
5.0	**171**	**2.5**	273.6	"	"	7000	-	6.0	143	3.0
3.1	**170**	**2.7**	448.8	**BG40G10-../D06LA4**	43	7000	-	3.7	125	3.7
2.6	**210**	**2.2**	534.2	"	"	7000	-	3.1	160	2.9
2.2	**275**	**1.7**	640.0	"	"	7000	-	2.6	215	2.2
1.9	**325**	**1.45**	710.9	"	"	7000	-	2.3	245	1.9
1.8	**335**	**1.4**	789.1	"	"	7000	-	2.1	270	1.7
1.4	**460**	**1.0**	965.2	"	"	7000	-	1.7	350	1.35
1.2	**550**	**0.85**	1225	"	"	7000	-	1.4	455	1.0
2.6	**210**	**3.3**	531.5	**BG50G10-../D06LA4**	51	10000	-	3.1	161	4.3
2.2	**280**	**2.5**	621.3	"	"	10000	-	2.7	205	3.4
2.0	**300**	**2.3**	708.3	"	"	10000	-	2.3	245	2.8
1.8	**335**	**2.1**	785.1	"	"	10000	-	2.1	270	2.6
1.5	**420**	**1.65**	960.2	"	"	10000	-	1.7	355	1.95
1.2	**550**	**1.25**	1219	"	"	10000	-	1.4	455	1.5
1.3	**420**	**3.1**	1051	**BG60G20-../D06LA4**	100	16000	-	1.6	295	4.4
1.2	**465**	**2.8**	1168	"	"	16000	-	1.4	365	3.6
1.1	**510**	**2.5**	1346	"	"	16000	-	1.3	395	3.3
0.95	**630**	**2.1**	1496	"	"	16000	-	1.1	510	2.5
0.8	**800**	**1.65**	1741	"	"	16000	-	0.95	630	2.1
0.75	**870**	**1.5**	1880	"	"	16000	-	0.9	680	1.9
0.65	**1050**	**1.25**	2249	"	"	16000	-	0.75	870	1.5
0.85	**770**	**3.2**	1666	**BG70G20-../D06LA4**	130	20000	-	1.0	620	4.0
0.7	**980**	**2.6**	1994	"	"	20000	-	0.85	770	3.2
0.65	**1080**	**2.3**	2215	"	"	20000	-	0.75	900	2.8
0.49	**1510**	**1.65**	2774	"	"	20000	-	0.6	1190	2.1
0.43	**1750**	**1.45**	3184	"	"	20000	-	0.55	1320	1.9
0.35	**2200**	**1.15**	3925	"	"	20000	-	0.42	1800	1.4

BG-series helical-geared motors

Selection helical-geared motors DSE -IE1

P = 0.12 kW

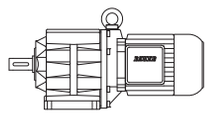

50 Hz			i	Type	m	F_{RN}	F_{RV}	60 Hz		
n_2	M_2	f_B						n_2	M_2	f_B
1/min	Nm				kg	N	N	1/min	Nm	
540	**2.1**	**1.9**	2.51	**BG04-../D04LA4**	4.4	340	-	650	1.76	2.3
370	**3.05**	**1.65**	3.65	"	"	390	-	445	2.55	1.95
310	**3.65**	**1.9**	4.39	"	"	380	-	370	3.05	2.3
255	**4.45**	**2.0**	5.36	"	"	380	-	305	3.75	2.4
205	**5.5**	**1.8**	6.67	"	"	410	-	245	4.65	2.2
158	**7.2**	**1.55**	8.58	"	"	410	-	189	6.0	1.85
150	**7.6**	**1.6**	9.00	"	"	470	-	180	6.3	1.9
137	**8.3**	**1.55**	9.90	"	"	480	-	164	6.9	1.9
125	**9.1**	**1.55**	10.82	"	"	480	-	150	7.6	1.85
114	**10**	**1.5**	11.90	"	"	490	-	137	8.3	1.8
108	**10.6**	**1.4**	12.55	"	"	490	-	130	8.8	1.7
103	**11.1**	**1.45**	13.20	"	"	500	-	123	9.3	1.7
93	**12.3**	**1.4**	14.52	"	"	510	-	112	10.2	1.65
83	**13.8**	**1.3**	16.44	"	"	530	-	99	11.5	1.55
75	**15.2**	**1.2**	18.08	"	"	540	-	90	12.7	1.4
64	**17.9**	**1.05**	21.12	"	"	560	-	77	14.8	1.3
59	**19.4**	**1.05**	23.23	"	"	600	-	70	16.3	1.25
56	**20**	**1.0**	24.45	"	"	610	-	67	17.1	1.15
51	**22**	**0.91**	26.89	"	"	650	-	61	18.7	1.05
295	**3.85**	**3.1**	4.59	**BG05-../D04LA4**	5.1	490	-	355	3.2	3.8
250	**4.55**	**3.1**	5.46	"	"	490	-	300	3.8	3.7
205	**5.5**	**2.9**	6.60	"	"	510	-	250	4.55	3.5
174	**6.5**	**2.8**	7.80	"	"	530	-	210	5.4	3.3
166	**6.9**	**2.6**	8.15	"	"	510	-	199	5.7	3.2
159	**7.2**	**2.6**	8.51	"	"	550	-	191	6.0	3.2
128	**8.9**	**2.2**	10.59	"	"	590	-	153	7.4	2.7
117	**9.7**	**2.2**	11.55	"	"	600	-	141	8.1	2.6
113	**10.1**	**2.1**	12.05	"	"	510	-	135	8.4	2.5
108	**10.6**	**2.1**	12.60	"	"	610	-	129	8.8	2.5
99	**11.5**	**2.0**	13.75	"	"	630	-	118	9.7	2.4
89	**12.8**	**1.9**	15.23	"	"	640	-	107	10.7	2.2
82	**13.9**	**1.8**	16.62	"	"	660	-	98	11.6	2.2
72	**15.9**	**1.65**	18.82	"	"	680	-	87	13.1	2.0
66	**17.3**	**1.55**	20.53	"	"	700	-	79	14.5	1.85
57	**20**	**1.4**	24.00	"	"	740	-	68	16.8	1.65
52	**22**	**1.3**	26.18	"	"	760	-	62	18.4	1.6
49	**23**	**1.3**	27.82	"	"	770	-	59	19.4	1.55
44.5	**25.5**	**1.2**	30.35	"	"	760	-	54	21	1.45
39	**29**	**1.05**	35.00	"	"	810	-	46.5	24.5	1.2
35.5	**32**	**0.94**	38.18	"	"	850	-	42.5	26.5	1.15
34	**33.5**	**0.9**	39.94	"	"	860	-	41	27.5	1.1
31	**36.5**	**0.82**	43.57	"	"	900	-	37.5	30.5	0.98
110	**10.4**	**3.2**	12.30	**BG06-../D04LA4**	6.1	670	-	132	8.6	3.8
105	**10.9**	**3.0**	12.98	"	"	600	-	125	9.1	3.6
92	**12.4**	**2.7**	14.78	"	"	730	-	110	10.4	3.3
84	**13.6**	**2.6**	16.13	"	"	740	-	101	11.3	3.1
78	**14.6**	**2.6**	17.40	"	"	760	-	94	12.1	3.1
72	**15.9**	**2.5**	18.98	"	"	770	-	86	13.3	3.0
65	**17.6**	**2.3**	20.82	"	"	800	-	78	14.6	2.7
60	**19.1**	**2.3**	22.71	"	"	810	-	72	15.9	2.7
53	**21.5**	**2.1**	25.48	"	"	850	-	64	17.9	2.5
49	**23**	**1.95**	27.80	"	"	840	-	59	19.4	2.3
42	**27**	**1.65**	32.22	"	"	890	-	51	22	2.0
38.5	**29.5**	**1.55**	35.15	"	"	880	-	46.5	24.5	1.85
37	**30.5**	**1.5**	36.91	"	"	890	-	44	26	1.75
34	**33.5**	**1.35**	40.26	"	"	890	-	40.5	28	1.6
29.5	**38.5**	**1.15**	46.19	"	"	890	-	35.5	32	1.4
27	**42**	**1.05**	50.38	"	"	940	-	32.5	35	1.3
26	**44**	**1.0**	52.56	"	"	950	-	31	36.5	1.25
24	**47.5**	**0.95**	57.34	"	"	1000	-	28.5	40	1.15
22.5	**50**	**0.9**	61.22	"	"	1020	-	26.5	43	1.05
20.5	**55**	**0.82**	66.79	"	"	1070	-	24.5	46.5	0.97

P = 0.12 kW

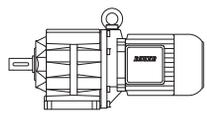

50 Hz			i	Type	m	F_{RN}	F_{RV}	60 Hz		
n_2	M_2	f_B						n_2	M_2	f_B
1/min	Nm				kg	N	N	1/min	Nm	
31	**36.5**	**3.3**	43.99	**BG10-../D06LA4**	13	1880	2600	37	30.5	3.9
29.5	**38.5**	**3.1**	46.55	"	"	1920	2650	35	32.5	3.7
26.5	**43**	**2.8**	51.57	"	"	2000	2800	31.5	36	3.3
23.5	**48.5**	**2.5**	57.48	"	"	2000	2800	28.5	40	3.0
21.5	**53**	**2.3**	63.69	"	"	2000	2800	25.5	44.5	2.7
20.5	**55**	**2.2**	66.00	"	"	2000	2800	25	45.5	2.6
18.5	**61**	**1.95**	73.13	"	"	2000	2800	22.5	50	2.4
17.5	**65**	**1.85**	77.40	**BG10Z-../D06LA4**	14	2000	2800	21	54	2.2
16	**71**	**1.7**	85.76	"	"	2000	2800	19	60	2.0
15	**76**	**1.6**	92.19	"	"	2000	2800	18	63	1.9
13.5	**84**	**1.45**	102.1	"	"	2000	2800	16	71	1.7
12.5	**91**	**1.3**	109.8	"	"	2000	2800	15	76	1.6
11.5	**99**	**1.2**	121.7	"	"	2000	2800	13.5	84	1.45
10.5	**109**	**1.1**	131.8	"	"	2000	2800	12.5	91	1.3
9.3	**123**	**0.98**	146.0	"	"	2000	2800	11.5	99	1.2
8.2	**139**	**0.86**	166.0	"	"	2000	2800	9.8	116	1.05
7.0	**143**	**0.91**	194.9	**BG10G06-../D06LA4**	18	2000	2800	8.4	115	1.15
17.5	**65**	**3.1**	78.60	**BG20Z-../D06LA4**	16	5000	-	21	54	3.7
15.5	**73**	**2.7**	87.30	"	"	5000	-	19	60	3.3
14.5	**79**	**2.5**	94.27	"	"	5000	-	17.5	65	3.1
13	**88**	**2.3**	104.7	"	"	5000	-	15.5	73	2.7
12	**95**	**2.1**	112.8	"	"	5000	-	14.5	79	2.5
11	**104**	**1.9**	125.3	"	"	5000	-	13	88	2.3
9.6	**119**	**1.7**	141.3	"	"	5000	-	11.5	99	2.0
8.4	**136**	**1.45**	162.2	"	"	5000	-	10	114	1.75
7.5	**152**	**1.3**	180.1	"	"	5000	-	9.0	127	1.55
6.8	**168**	**1.2**	199.9	"	"	5000	-	8.2	139	1.45
6.1	**187**	**1.05**	222.1	"	"	5000	-	7.3	156	1.3
5.5	**182**	**1.2**	248.0	**BG20G06-../D06LA4**	20	5000	-	6.6	147	1.5
4.6	**220**	**1.0**	297.9	"	"	5000	-	5.5	179	1.25
3.9	**265**	**0.83**	352.1	"	"	5000	-	4.7	215	1.0
12.5	**91**	**3.3**	109.6	**BG30Z-../D06LA4**	22	6000	-	15	76	3.9
11.5	**99**	**3.0**	121.6	"	"	6000	-	13.5	84	3.6
11	**104**	**2.9**	128.5	"	"	6000	-	13	88	3.4
9.5	**120**	**2.5**	142.5	"	"	6000	-	11.5	99	3.0
9.0	**127**	**2.4**	151.5	"	"	6000	-	11	104	2.9
8.1	**141**	**2.1**	168.1	"	"	6000	-	9.7	118	2.5
7.4	**154**	**1.95**	182.9	"	"	6000	-	8.9	128	2.3
6.7	**171**	**1.75**	202.9	"	"	6000	-	8.0	143	2.1
6.0	**191**	**1.55**	225.9	"	"	6000	-	7.2	159	1.9
5.2	**220**	**1.35**	261.9	"	"	6000	-	6.2	184	1.65
4.7	**240**	**1.25**	290.5	"	"	6000	-	5.6	200	1.5
4.5	**220**	**1.5**	306.2	**BG30G06-../D06LA4**	25	6000	-	5.3	186	1.75
3.9	**265**	**1.25**	346.8	"	"	6000	-	4.7	215	1.5
3.4	**300**	**1.1**	401.9	"	"	6000	-	4.1	245	1.35
2.9	**360**	**0.9**	472.8	"	"	6000	-	3.5	290	1.1
8.7	**131**	**3.2**	156.9	**BG40Z-../D06LA4**	38	7000	-	10.5	109	3.9
8.2	**139**	**3.1**	166.1	"	"	7000	-	9.8	116	3.7
7.4	**154**	**2.8**	184.4	"	"	7000	-	8.8	130	3.3
6.8	**168**	**2.5**	199.9	"	"	7000	-	8.2	139	3.1
6.1	**187**	**2.3**	221.9	"	"	7000	-	7.4	154	2.8
5.5	**205**	**2.1**	246.5	"	"	7000	-	6.6	173	2.5
5.0	**225**	**1.9**	273.6	"	"	7000	-	6.0	191	2.2
4.7	**153**	**3.0**	288.6	**BG40G10-../D06LA4**	43	7000	-	5.7	111	4.2
3.9	**194**	**2.4**	353.5	"	"	7000	-	4.6	149	3.1
3.1	**260**	**1.8**	448.8	"	"	7000	-	3.7	200	2.3
2.6	**320**	**1.45**	534.2	"	"	7000	-	3.1	250	1.85
2.2	**405**	**1.15**	640.0	"	"	7000	-	2.6	325	1.45
1.9	**475**	**0.98**	710.9	"	"	7000	-	2.3	370	1.25
1.8	**495**	**0.94**	789.1	"	"	7000	-	2.1	405	1.15

BG-series helical-geared motors

Selection helical-geared motors DSE -IE1

P = 0.12 kW

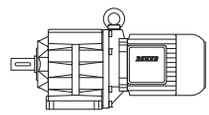

50 Hz			i	Type	m	F_{RN}	F_{RV}	60 Hz		
n_2	M_2	f_B						n_2	M_2	f_B
1/min	Nm				kg	N	N	1/min	Nm	
6.0	**191**	**3.3**	226.9	**BG50Z-../D06LA4**	47	10000	-	7.2	159	4.0
5.3	**215**	**2.9**	258.6	"	"	10000	-	6.3	181	3.5
4.8	**235**	**2.7**	286.7	"	"	10000	-	5.7	200	3.2
3.1	**260**	**2.7**	446.5	**BG50G10-../D06LA4**	51	10000	-	3.7	200	3.5
2.6	**320**	**2.2**	531.5	"	"	10000	-	3.1	250	2.8
2.2	**410**	**1.7**	621.3	"	"	10000	-	2.7	310	2.2
2.0	**445**	**1.55**	708.3	"	"	10000	-	2.3	370	1.85
1.8	**495**	**1.4**	785.1	"	"	10000	-	2.1	405	1.7
1.5	**610**	**1.15**	960.2	"	"	10000	-	1.7	520	1.35
1.2	**790**	**0.87**	1219	"	"	10000	-	1.4	660	1.05
1.7	**470**	**2.8**	804.5	**BG60G20-../D06LA4**	100	16000	-	2.1	340	3.8
1.6	**490**	**2.7**	891.5	"	"	16000	-	1.9	375	3.5
1.3	**640**	**2.0**	1051	"	"	16000	-	1.6	475	2.7
1.2	**700**	**1.85**	1168	"	"	16000	-	1.4	570	2.3
1.1	**770**	**1.7**	1346	"	"	16000	-	1.3	610	2.1
0.95	**930**	**1.4**	1496	"	"	16000	-	1.1	770	1.7
0.8	**1160**	**1.1**	1741	"	"	16000	-	0.95	930	1.4
0.75	**1250**	**1.05**	1880	"	"	16000	-	0.9	1000	1.3
1.0	**900**	**2.8**	1389	**BG70G20-../D06LA4**	130	20000	-	1.2	710	3.5
0.9	**1030**	**2.4**	1543	"	"	20000	-	1.1	800	3.1
0.85	**1100**	**2.3**	1666	"	"	20000	-	1.0	900	2.8
0.7	**1390**	**1.8**	1994	"	"	20000	-	0.85	1100	2.3
0.65	**1520**	**1.65**	2215	"	"	20000	-	0.75	1280	1.95
0.49	**2050**	**1.2**	2774	"	"	20000	-	0.6	1670	1.5
0.43	**2400**	**1.05**	3184	"	"	20000	-	0.55	1840	1.35

P = 0.18 kW

50 Hz			i	Type	m	F_{RN}	F_{RV}	60 Hz		
n_2	M_2	f_B						n_2	M_2	f_B
1/min	Nm				kg	N	N	1/min	Nm	
520	**3.3**	**2.7**	2.64	**BG05-../D05LA4**	7.0	420	-	620	2.75	3.3
400	**4.25**	**2.4**	3.38	"	"	460	-	480	3.55	2.8
295	**5.8**	**2.1**	4.59	"	"	490	-	355	4.8	2.5
250	**6.8**	**2.1**	5.46	"	"	490	-	300	5.7	2.5
205	**8.3**	**1.95**	6.60	"	"	510	-	250	6.8	2.4
174	**9.8**	**1.85**	7.80	"	"	530	-	210	8.1	2.2
166	**10.3**	**1.75**	8.15	"	"	510	-	199	8.6	2.1
159	**10.8**	**1.75**	8.51	"	"	550	-	191	9.0	2.1
128	**13.4**	**1.5**	10.59	"	"	590	-	153	11.2	1.8
117	**14.6**	**1.45**	11.55	"	"	600	-	141	12.1	1.75
113	**15.2**	**1.4**	12.05	"	"	510	-	135	12.7	1.65
108	**15.9**	**1.4**	12.60	"	"	610	-	129	13.3	1.65
99	**17.3**	**1.35**	13.75	"	"	630	-	118	14.5	1.6
89	**19.3**	**1.25**	15.23	"	"	640	-	107	16	1.5
82	**20.5**	**1.2**	16.62	"	"	660	-	98	17.5	1.45
72	**23.5**	**1.1**	18.82	"	"	680	-	87	19.7	1.3
66	**26**	**1.05**	20.53	"	"	700	-	79	21.5	1.25
57	**30**	**0.93**	24.00	"	"	740	-	68	25	1.1
52	**33**	**0.88**	26.18	"	"	760	-	62	27.5	1.05
49	**35**	**0.86**	27.82	"	"	770	-	59	29	1.05
230	**7.4**	**3.2**	5.96	**BG06-../D05LA4**	8.0	570	-	275	6.2	3.9
193	**8.9**	**2.9**	7.01	"	"	580	-	235	7.3	3.6
161	**10.6**	**2.6**	8.39	"	"	600	-	194	8.8	3.2
144	**11.9**	**2.5**	9.38	"	"	640	-	173	9.9	3.0
132	**13**	**2.4**	10.24	"	"	640	-	159	10.8	2.9
120	**14.3**	**2.2**	11.28	"	"	670	-	144	11.9	2.7
110	**15.6**	**2.1**	12.30	"	"	670	-	132	13	2.5
105	**16.3**	**2.0**	12.98	"	"	600	-	125	13.7	2.4
92	**18.6**	**1.85**	14.78	"	"	730	-	110	15.6	2.2
84	**20**	**1.75**	16.13	"	"	740	-	101	17	2.1

P = 0.18 kW

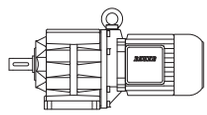

50 Hz			i	Type	m	F_{RN}	F_{RV}	60 Hz		
n_2	M_2	f_B						n_2	M_2	f_B
1/min	Nm				kg	N	N	1/min	Nm	
78	**22**	**1.75**	17.40	**BG06-../D05LA4**	"	760	-	94	18.2	2.1
72	**23.5**	**1.7**	18.98	"	"	770	-	86	19.9	2.0
65	**26**	**1.55**	20.82	"	"	800	-	78	22	1.8
60	**28.5**	**1.5**	22.71	"	"	810	-	72	23.5	1.85
53	**32**	**1.4**	25.48	"	"	850	-	64	26.5	1.7
49	**35**	**1.3**	27.80	"	"	840	-	59	29	1.55
42	**40.5**	**1.1**	32.22	"	"	890	-	51	33.5	1.35
38.5	**44.5**	**1.0**	35.15	"	"	880	-	46.5	36.5	1.25
37	**46**	**0.98**	36.91	"	"	890	-	44	39	1.15
34	**50**	**0.9**	40.26	"	"	890	-	40.5	42	1.05
46.5	**36.5**	**3.3**	29.09	**BG10-../D06LA4**	13	1540	2150	56	30.5	3.9
43	**39.5**	**3.0**	31.52	"	"	1600	2200	52	33	3.6
39	**44**	**2.7**	34.92	"	"	1690	2350	46.5	36.5	3.3
34.5	**49.5**	**2.4**	39.70	"	"	1780	2450	41	41.5	2.9
31	**55**	**2.2**	43.99	"	"	1880	2600	37	46	2.6
29.5	**58**	**2.1**	46.55	"	"	1920	2650	35	49	2.4
26.5	**64**	**1.9**	51.57	"	"	2000	2800	31.5	54	2.2
23.5	**73**	**1.65**	57.48	"	"	2000	2800	28.5	60	2.0
21.5	**79**	**1.5**	63.69	"	"	2000	2800	25.5	67	1.8
20.5	**83**	**1.45**	66.00	"	"	2000	2800	25	68	1.75
18.5	**92**	**1.3**	73.13	"	"	2000	2800	22.5	76	1.6
17.5	**98**	**1.2**	77.40	**BG10Z-../D06LA4**	14	2000	2800	21	81	1.5
16	**107**	**1.1**	85.76	"	"	2000	2800	19	90	1.35
15	**114**	**1.05**	92.19	"	"	2000	2800	18	95	1.25
13.5	**127**	**0.94**	102.1	"	"	2000	2800	16	107	1.1
12.5	**137**	**0.88**	109.8	"	"	2000	2800	15	114	1.05
11.5	**149**	**0.81**	121.7	"	"	2000	2800	13.5	127	0.94
36	**47.5**	**3.2**	37.90	**BG15-../D06LA4**	13	3000	6000	43	39.5	3.8
28.5	**60**	**3.3**	47.92	**BG20-../D06LA4**	16	4750	-	34	50	4.0
25.5	**67**	**3.0**	53.22	"	"	4950	-	30.5	56	3.6
23	**74**	**2.7**	59.07	"	"	5000	-	27.5	62	3.2
21	**81**	**2.5**	65.62	"	"	5000	-	25	68	2.9
20	**85**	**2.4**	67.53	**BG20Z-../D06LA4**	16	5000	-	24	71	2.8
17.5	**98**	**2.0**	78.60	"	"	5000	-	21	81	2.5
15.5	**110**	**1.8**	87.30	"	"	5000	-	19	90	2.2
14.5	**118**	**1.7**	94.27	"	"	5000	-	17.5	98	2.0
13	**132**	**1.5**	104.7	"	"	5000	-	15.5	110	1.8
12	**143**	**1.4**	112.8	"	"	5000	-	14.5	118	1.7
11	**156**	**1.3**	125.3	"	"	5000	-	13	132	1.5
9.6	**179**	**1.1**	141.3	"	"	5000	-	11.5	149	1.35
8.4	**200**	**1.0**	162.2	"	"	5000	-	10	171	1.15
7.5	**225**	**0.89**	180.1	"	"	5000	-	9.0	191	1.05
6.8	**250**	**0.8**	199.9	"	"	5000	-	8.2	205	0.98
21	**81**	**3.3**	65.79	**BG30Z-../D06LA4**	22	6000	-	25	68	3.9
18.5	**92**	**3.3**	73.51	"	"	6000	-	22.5	76	3.9
17	**101**	**3.0**	81.55	"	"	6000	-	20	85	3.5
16	**107**	**2.8**	86.13	"	"	6000	-	19	90	3.3
14.5	**118**	**2.5**	95.55	"	"	6000	-	17	101	3.0
12.5	**137**	**2.2**	109.6	"	"	6000	-	15	114	2.6
11.5	**149**	**2.0**	121.6	"	"	6000	-	13.5	127	2.4
11	**156**	**1.9**	128.5	"	"	6000	-	13	132	2.3
9.5	**180**	**1.65**	142.5	"	"	6000	-	11.5	149	2.0
9.0	**191**	**1.55**	151.5	"	"	6000	-	11	156	1.9
8.1	**210**	**1.45**	168.1	"	"	6000	-	9.7	177	1.7
7.4	**230**	**1.3**	182.9	"	"	6000	-	8.9	193	1.55
6.7	**255**	**1.2**	202.9	"	"	6000	-	8.0	210	1.45
6.0	**285**	**1.05**	225.9	"	"	6000	-	7.2	235	1.3
5.2	**330**	**0.91**	261.9	"	"	6000	-	6.2	275	1.1
4.7	**365**	**0.82**	290.5	"	"	6000	-	5.6	305	0.98
4.5	**350**	**0.93**	306.2	**BG30G06-../D06LA4**	25	6000	-	5.3	290	1.1

BG-series helical-geared motors

Selection helical-geared motors DSE -IE1

P = 0.18 kW

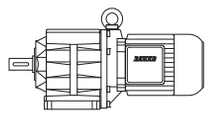

50 Hz			i	Type	m	F_{RN}	F_{RV}	60 Hz		
n_2	M_2	f_B						n_2	M_2	f_B
1/min	Nm				kg	N	N	1/min	Nm	
13	**132**	**3.2**	107.5	**BG40Z-../D06LA4**	38	7000	-	15.5	110	3.9
11.5	**149**	**2.9**	121.3	"	"	7000	-	13.5	127	3.3
10.5	**163**	**2.6**	134.6	"	"	7000	-	12.5	137	3.1
9.6	**179**	**2.4**	141.4	"	"	7000	-	11.5	149	2.9
8.7	**197**	**2.2**	156.9	"	"	7000	-	10.5	163	2.6
8.2	**205**	**2.1**	166.1	"	"	7000	-	9.8	175	2.4
7.4	**230**	**1.85**	184.4	"	"	7000	-	8.8	195	2.2
6.8	**250**	**1.7**	199.9	"	"	7000	-	8.2	205	2.1
6.1	**280**	**1.5**	221.9	"	"	7000	-	7.4	230	1.85
5.5	**310**	**1.35**	246.5	"	"	7000	-	6.6	260	1.65
5.0	**340**	**1.25**	273.6	"	"	7000	-	6.0	285	1.5
4.7	**275**	**1.7**	288.6	**BG40G10-../D06LA4**	43	7000	-	5.7	210	2.2
3.9	**340**	**1.35**	353.5	"	"	7000	-	4.6	270	1.7
3.1	**445**	**1.05**	448.8	"	"	7000	-	3.7	355	1.3
2.6	**540**	**0.86**	534.2	"	"	7000	-	3.1	435	1.05
8.2	**205**	**3.1**	164.9	**BG50Z-../D06LA4**	47	10000	-	9.9	173	3.6
7.4	**230**	**2.7**	182.8	"	"	10000	-	8.9	193	3.3
6.6	**260**	**2.4**	204.7	"	"	10000	-	8.0	210	3.0
6.0	**285**	**2.2**	226.9	"	"	10000	-	7.2	235	2.7
5.3	**320**	**1.95**	258.6	"	"	10000	-	6.3	270	2.3
4.8	**355**	**1.75**	286.7	"	"	10000	-	5.7	300	2.1
3.9	**340**	**2.0**	351.7	**BG50G10-../D06LA4**	51	10000	-	4.7	265	2.6
3.1	**445**	**1.55**	446.5	"	"	10000	-	3.7	355	1.95
2.6	**540**	**1.3**	531.5	"	"	10000	-	3.1	435	1.6
2.2	**670**	**1.05**	621.3	"	"	10000	-	2.7	520	1.35
2.0	**730**	**0.95**	708.3	"	"	10000	-	2.3	620	1.1
1.8	**810**	**0.85**	785.1	"	"	10000	-	2.1	680	1.0
2.7	**485**	**2.7**	504.9	**BG60G20-../D06LA4**	100	16000	-	3.3	370	3.5
2.5	**520**	**2.5**	559.5	"	"	16000	-	2.9	425	3.1
2.1	**650**	**2.0**	651.3	"	"	16000	-	2.5	520	2.5
1.7	**800**	**1.65**	804.5	"	"	16000	-	2.1	610	2.1
1.6	**840**	**1.55**	891.5	"	"	16000	-	1.9	670	1.95
1.3	**1080**	**1.2**	1051	"	"	16000	-	1.6	830	1.55
1.2	**1180**	**1.1**	1168	"	"	16000	-	1.4	980	1.35
1.1	**1290**	**1.0**	1346	"	"	16000	-	1.3	1050	1.25
1.8	**750**	**3.3**	790.2	**BG70G20-../D06LA4**	130	20000	-	2.1	610	4.1
1.6	**860**	**2.9**	877.6	"	"	20000	-	1.9	690	3.6
1.4	**1000**	**2.5**	1035	"	"	20000	-	1.6	850	2.9
1.2	**1190**	**2.1**	1193	"	"	20000	-	1.4	990	2.5
1.0	**1470**	**1.7**	1389	"	"	20000	-	1.2	1190	2.1
0.9	**1670**	**1.5**	1543	"	"	20000	-	1.1	1320	1.9
0.85	**1780**	**1.4**	1666	"	"	20000	-	1.0	1470	1.7
0.7	**2200**	**1.15**	1994	"	"	20000	-	0.85	1780	1.4
0.65	**2400**	**1.05**	2215	"	"	20000	-	0.75	2050	1.2

P = 0.25 kW

50 Hz			i	Type	m	F_{RN}	F_{RV}	60 Hz		
n_2	M_2	f_B						n_2	M_2	f_B
1/min	Nm				kg	N	N	1/min	Nm	
520	**4.55**	**2.0**	2.64	**BG05-../D05LA4**	7.0	420	-	620	3.85	2.3
400	**5.9**	**1.7**	3.38	"	"	460	-	480	4.95	2.0
295	**8.0**	**1.5**	4.59	"	"	490	-	355	6.7	1.8
250	**9.5**	**1.45**	5.46	"	"	490	-	300	7.9	1.75
205	**11.6**	**1.4**	6.60	"	"	510	-	250	9.5	1.7
174	**13.7**	**1.3**	7.80	"	"	530	-	210	11.3	1.6
166	**14.3**	**1.25**	8.15	"	"	510	-	199	11.9	1.5
159	**15**	**1.25**	8.51	"	"	550	-	191	12.5	1.5
128	**18.6**	**1.1**	10.59	"	"	590	-	153	15.6	1.3
117	**20**	**1.05**	11.55	"	"	600	-	141	16.9	1.25

P = 0.25 kW

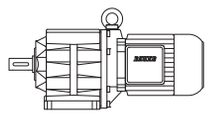

50 Hz			i	Type	m	F_{RN}	F_{RV}	60 Hz		
n_2	M_2	f_B						n_2	M_2	f_B
1/min	Nm				kg	N	N	1/min	Nm	
113	**21**	**1.0**	12.05	**BG05-../D05LA4**	"	510	-	135	17.6	1.2
108	**22**	**1.0**	12.60	"	"	610	-	129	18.5	1.2
99	**24**	**0.96**	13.75	"	"	630	-	118	20	1.15
89	**26.5**	**0.91**	15.23	"	"	640	-	107	22	1.1
82	**29**	**0.86**	16.62	"	"	660	-	98	24	1.05
360	**6.6**	**3.0**	3.78	**BG06-../D05LA4**	8.0	520	-	430	5.5	3.6
300	**7.9**	**2.8**	4.54	"	"	530	-	360	6.6	3.3
230	**10.3**	**2.3**	5.96	"	"	570	-	275	8.6	2.8
193	**12.3**	**2.1**	7.01	"	"	580	-	235	10.1	2.6
161	**14.8**	**1.9**	8.39	"	"	600	-	194	12.3	2.3
144	**16.5**	**1.8**	9.38	"	"	640	-	173	13.8	2.2
132	**18**	**1.7**	10.24	"	"	640	-	159	15	2.1
120	**19.8**	**1.6**	11.28	"	"	670	-	144	16.5	1.95
110	**21.5**	**1.55**	12.30	"	"	670	-	132	18	1.85
105	**22.5**	**1.45**	12.98	"	"	600	-	125	19.1	1.75
92	**25.5**	**1.35**	14.78	"	"	730	-	110	21.5	1.6
84	**28**	**1.25**	16.13	"	"	740	-	101	23.5	1.5
78	**30.5**	**1.25**	17.40	"	"	760	-	94	25	1.5
72	**33**	**1.2**	18.98	"	"	770	-	86	27.5	1.45
65	**36.5**	**1.1**	20.82	"	"	800	-	78	30.5	1.3
60	**39.5**	**1.1**	22.71	"	"	810	-	72	33	1.3
53	**45**	**1.0**	25.48	"	"	850	-	64	37	1.2
49	**48.5**	**0.93**	27.80	"	"	840	-	59	40	1.15
42	**56**	**0.8**	32.22	"	"	890	-	51	46.5	0.97
66	**36**	**3.3**	20.51	**BG10-../D06LA4**	13	1290	1800	79	30	4.0
62	**38.5**	**3.1**	22.04	"	"	1330	1860	74	32	3.8
56	**42.5**	**2.8**	24.42	"	"	1410	1970	67	35.5	3.4
52	**45.5**	**2.6**	26.26	"	"	1460	2000	62	38.5	3.1
46.5	**51**	**2.4**	29.09	"	"	1540	2150	56	42.5	2.8
43	**55**	**2.2**	31.52	"	"	1600	2200	52	45.5	2.6
39	**61**	**1.95**	34.92	"	"	1690	2350	46.5	51	2.4
34.5	**69**	**1.75**	39.70	"	"	1780	2450	41	58	2.1
31	**77**	**1.55**	43.99	"	"	1880	2600	37	64	1.9
29.5	**80**	**1.5**	46.55	"	"	1920	2650	35	68	1.75
26.5	**90**	**1.35**	51.57	"	"	2000	2800	31.5	75	1.6
23.5	**101**	**1.2**	57.48	"	"	2000	2800	28.5	83	1.45
21.5	**111**	**1.1**	63.69	"	"	2000	2800	25.5	93	1.3
20.5	**116**	**1.05**	66.00	"	"	2000	2800	25	95	1.25
18.5	**129**	**0.93**	73.13	"	"	2000	2800	22.5	106	1.15
17.5	**136**	**0.88**	77.40	**BG10Z-../D06LA4**	14	2000	2800	21	113	1.05
16	**149**	**0.81**	85.76	"	"	2000	2800	19	125	0.96
50	**47.5**	**3.2**	27.08	**BG15-../D06LA4**	13	3000	6000	60	39.5	3.8
45	**53**	**2.8**	30.08	"	"	3000	6000	54	44	3.4
39.5	**60**	**2.5**	34.20	"	"	3000	6000	47.5	50	3.0
36	**66**	**2.3**	37.90	"	"	3000	6000	43	55	2.7
36.5	**65**	**3.1**	37.02	**BG20-../D06LA4**	16	4300	-	44	54	3.7
32.5	**73**	**2.7**	41.76	"	"	4500	-	39	61	3.3
29.5	**80**	**2.5**	46.38	"	"	4700	-	35	68	2.9
28.5	**83**	**2.4**	47.92	"	"	4750	-	34	70	2.9
25.5	**93**	**2.2**	53.22	"	"	4950	-	30.5	78	2.6
23	**103**	**1.95**	59.07	"	"	5000	-	27.5	86	2.3
21	**113**	**1.75**	65.62	"	"	5000	-	25	95	2.1
20	**119**	**1.7**	67.53	**BG20Z-../D06LA4**	16	5000	-	24	99	2.0
17.5	**136**	**1.45**	78.60	"	"	5000	-	21	113	1.75
15.5	**154**	**1.3**	87.30	"	"	5000	-	19	125	1.6
14.5	**164**	**1.2**	94.27	"	"	5000	-	17.5	136	1.45
13	**183**	**1.1**	104.7	"	"	5000	-	15.5	154	1.3
12	**198**	**1.0**	112.8	"	"	5000	-	14.5	164	1.2
11	**215**	**0.93**	125.3	"	"	5000	-	13	183	1.1
9.6	**245**	**0.82**	141.3	"	"	5000	-	11.5	205	0.98

BG-series helical-geared motors

Selection helical-geared motors DSE -IE1

P = 0.25 kW

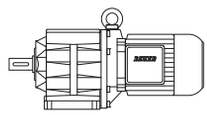

50 Hz			i	Type	m	F_{RN}	F_{RV}	60 Hz		
n_2	M_2	f_B						n_2	M_2	f_B
1/min	Nm				kg	N	N	1/min	Nm	
26	**91**	**3.3**	52.44	**BG30-../D06LA4**	20	6000	-	31	77	3.9
23.5	**101**	**3.0**	58.18	"	"	6000	-	28	85	3.5
22.5	**106**	**2.8**	60.79	"	"	6000	-	27	88	3.4
20.5	**116**	**2.6**	67.44	"	"	6000	-	24.5	97	3.1
18.5	**129**	**2.3**	73.51	**BG30Z-../D06LA4**	22	6000	-	22.5	106	2.8
17	**140**	**2.1**	81.55	"	"	6000	-	20	119	2.5
16	**149**	**2.0**	86.13	"	"	6000	-	19	125	2.4
14.5	**164**	**1.85**	95.55	"	"	6000	-	17	140	2.1
12.5	**191**	**1.55**	109.6	"	"	6000	-	15	159	1.9
11.5	**205**	**1.45**	121.6	"	"	6000	-	13.5	176	1.7
11	**215**	**1.4**	128.5	"	"	6000	-	13	183	1.65
9.5	**250**	**1.2**	142.5	"	"	6000	-	11.5	205	1.45
9.0	**265**	**1.15**	151.5	"	"	6000	-	11	215	1.4
8.1	**290**	**1.05**	168.1	"	"	6000	-	9.7	245	1.2
7.4	**320**	**0.94**	182.9	"	"	6000	-	8.9	265	1.15
6.7	**355**	**0.85**	202.9	"	"	6000	-	8.0	295	1.0
18	**132**	**3.2**	75.19	**BG40Z-../D06LA4**	38	7000	-	22	108	3.9
16.5	**144**	**3.0**	82.00	"	"	7000	-	20	119	3.6
15	**159**	**2.7**	91.02	"	"	7000	-	18	132	3.2
14	**170**	**2.5**	96.86	"	"	7000	-	17	140	3.0
13	**183**	**2.3**	107.5	"	"	7000	-	15.5	154	2.8
11.5	**205**	**2.1**	121.3	"	"	7000	-	13.5	176	2.4
10.5	**225**	**1.9**	134.6	"	"	7000	-	12.5	191	2.2
9.6	**245**	**1.75**	141.4	"	"	7000	-	11.5	205	2.1
8.7	**270**	**1.55**	156.9	"	"	7000	-	10.5	225	1.9
8.2	**290**	**1.45**	166.1	"	"	7000	-	9.8	240	1.75
7.4	**320**	**1.35**	184.4	"	"	7000	-	8.8	270	1.55
6.8	**350**	**1.2**	199.9	"	"	7000	-	8.2	290	1.45
6.1	**390**	**1.1**	221.9	"	"	7000	-	7.4	320	1.35
5.5	**430**	**0.99**	246.5	"	"	7000	-	6.6	360	1.2
5.0	**475**	**0.89**	273.6	"	"	7000	-	6.0	395	1.1
4.7	**415**	**1.1**	288.6	**BG40G10-../D06LA4**	43	7000	-	5.7	325	1.45
3.9	**510**	**0.91**	353.5	"	"	7000	-	4.6	415	1.1
10.5	**225**	**2.8**	128.9	**BG50Z-../D06LA4**	47	10000	-	13	183	3.4
9.5	**250**	**2.5**	142.9	"	"	10000	-	11.5	205	3.1
8.2	**290**	**2.2**	164.9	"	"	10000	-	9.9	240	2.6
7.4	**320**	**1.95**	182.8	"	"	10000	-	8.9	265	2.4
6.6	**360**	**1.75**	204.7	"	"	10000	-	8.0	295	2.1
6.0	**395**	**1.6**	226.9	"	"	10000	-	7.2	330	1.9
5.3	**450**	**1.4**	258.6	"	"	10000	-	6.3	375	1.7
4.8	**495**	**1.25**	286.7	"	"	10000	-	5.7	415	1.5
3.9	**510**	**1.35**	351.7	**BG50G10-../D06LA4**	51	10000	-	4.7	405	1.7
3.1	**660**	**1.05**	446.5	"	"	10000	-	3.7	530	1.3
2.6	**800**	**0.86**	531.5	"	"	10000	-	3.1	650	1.05
4.5	**400**	**3.3**	306.1	**BG60G20-../D06LA4**	100	16000	-	5.3	320	4.1
4.1	**440**	**3.0**	334.3	"	"	16000	-	4.9	345	3.8
3.7	**490**	**2.7**	370.5	"	"	16000	-	4.4	385	3.4
3.1	**600**	**2.2**	437.3	"	"	16000	-	3.8	460	2.8
2.7	**730**	**1.8**	504.9	"	"	16000	-	3.3	570	2.3
2.5	**790**	**1.65**	559.5	"	"	16000	-	2.9	650	2.0
2.1	**970**	**1.35**	651.3	"	"	16000	-	2.5	790	1.65
1.7	**1200**	**1.1**	804.5	"	"	16000	-	2.1	930	1.4
1.6	**1260**	**1.05**	891.5	"	"	16000	-	1.9	1030	1.25
1.3	**1590**	**0.82**	1051	"	"	16000	-	1.6	1250	1.05
2.4	**840**	**3.0**	577.3	**BG70G20-../D06LA4**	130	20000	-	2.9	670	3.7
2.1	**960**	**2.6**	665.8	"	"	20000	-	2.5	780	3.2
1.8	**1120**	**2.2**	790.2	"	"	20000	-	2.1	930	2.7
1.6	**1280**	**1.95**	877.6	"	"	20000	-	1.9	1050	2.4
1.4	**1480**	**1.7**	1035	"	"	20000	-	1.6	1270	1.95
1.2	**1750**	**1.45**	1193	"	"	20000	-	1.4	1470	1.7
1.0	**2100**	**1.2**	1389	"	"	20000	-	1.2	1750	1.45
0.9	**2400**	**1.05**	1543	"	"	20000	-	1.1	1930	1.3

P = 0.3 kW

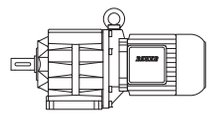

50 Hz			i	Type	m	F_{RN}	F_{RV}	60 Hz		
n_2	M_2	f_B						n_2	M_2	f_B
1/min	Nm				kg	N	N	1/min	Nm	
520	**5.5**	**1.65**	2.64	**BG05-../D07LA4**	11	420	-	620	4.6	1.95
400	**7.1**	**1.4**	3.38	"	"	460	-	480	5.9	1.7
295	**9.7**	**1.25**	4.59	"	"	490	-	355	8.0	1.5
250	**11.4**	**1.25**	5.46	"	"	490	-	300	9.5	1.45
205	**13.9**	**1.15**	6.60	"	"	510	-	250	11.4	1.4
174	**16.4**	**1.1**	7.80	"	"	530	-	210	13.6	1.3
166	**17.2**	**1.05**	8.15	"	"	510	-	199	14.3	1.25
159	**18**	**1.05**	8.51	"	"	550	-	191	15	1.25
128	**22**	**0.91**	10.59	"	"	590	-	153	18.7	1.05
117	**24**	**0.88**	11.55	"	"	600	-	141	20	1.05
113	**25**	**0.84**	12.05	"	"	510	-	135	21	1.0
108	**26.5**	**0.83**	12.60	"	"	610	-	129	22	1.0
99	**28.5**	**0.81**	13.75	"	"	630	-	118	24	0.96
360	**7.9**	**2.5**	3.78	**BG06-../D07LA4**	12	520	-	430	6.6	3.0
300	**9.5**	**2.3**	4.54	"	"	530	-	360	7.9	2.8
230	**12.4**	**1.95**	5.96	"	"	570	-	275	10.4	2.3
193	**14.8**	**1.75**	7.01	"	"	580	-	235	12.1	2.1
161	**17.7**	**1.6**	8.39	"	"	600	-	194	14.7	1.9
144	**19.8**	**1.5**	9.38	"	"	640	-	173	16.5	1.8
132	**21.5**	**1.45**	10.24	"	"	640	-	159	18	1.7
120	**23.5**	**1.35**	11.28	"	"	670	-	144	19.8	1.6
110	**26**	**1.25**	12.30	"	"	670	-	132	21.5	1.55
105	**27**	**1.2**	12.98	"	"	600	-	125	22.5	1.45
92	**31**	**1.1**	14.78	"	"	730	-	110	26	1.3
84	**34**	**1.05**	16.13	"	"	740	-	101	28	1.25
78	**36.5**	**1.05**	17.40	"	"	760	-	94	30	1.25
72	**39.5**	**1.0**	18.98	"	"	770	-	86	33	1.2
65	**44**	**0.91**	20.82	"	"	800	-	78	36.5	1.1
60	**47.5**	**0.91**	22.71	"	"	810	-	72	39.5	1.1
53	**54**	**0.83**	25.48	"	"	850	-	64	44.5	1.0
73	**39**	**3.1**	18.51	**BG10-../D07LA4**	15	1210	1690	88	32.5	3.7
66	**43**	**2.8**	20.51	"	"	1290	1800	79	36	3.3
62	**46**	**2.6**	22.04	"	"	1330	1860	74	38.5	3.1
56	**51**	**2.4**	24.42	"	"	1410	1970	67	42.5	2.8
52	**55**	**2.2**	26.26	"	"	1460	2000	62	46	2.6
46.5	**61**	**1.95**	29.09	"	"	1540	2150	56	51	2.4
43	**66**	**1.8**	31.52	"	"	1600	2200	52	55	2.2
39	**73**	**1.65**	34.92	"	"	1690	2350	46.5	61	1.95
34.5	**83**	**1.45**	39.70	"	"	1780	2450	41	69	1.75
31	**92**	**1.3**	43.99	"	"	1880	2600	37	77	1.55
29.5	**97**	**1.25**	46.55	"	"	1920	2650	35	81	1.5
26.5	**108**	**1.1**	51.57	"	"	2000	2800	31.5	90	1.35
23.5	**121**	**0.99**	57.48	"	"	2000	2800	28.5	100	1.2
21.5	**133**	**0.9**	63.69	"	"	2000	2800	25.5	112	1.05
20.5	**139**	**0.86**	66.00	"	"	2000	2800	25	114	1.05
50	**57**	**2.6**	27.08	**BG15-../D07LA4**	15	3000	6000	60	47.5	3.2
45	**63**	**2.4**	30.08	"	"	3000	6000	54	53	2.8
39.5	**72**	**2.1**	34.20	"	"	3000	6000	47.5	60	2.5
36	**79**	**1.9**	37.90	"	"	3000	6000	43	66	2.3
44	**65**	**3.1**	30.94	**BG20-../D07LA4**	18	4000	-	53	54	3.7
41	**69**	**2.9**	33.33	"	"	4100	-	49	58	3.4
36.5	**78**	**2.6**	37.02	"	"	4300	-	44	65	3.1
32.5	**88**	**2.3**	41.76	"	"	4500	-	39	73	2.7
29.5	**97**	**2.1**	46.38	"	"	4700	-	35	81	2.5
28.5	**100**	**2.0**	47.92	"	"	4750	-	34	84	2.4
25.5	**112**	**1.8**	53.22	"	"	4950	-	30.5	93	2.2
23	**124**	**1.6**	59.07	"	"	5000	-	27.5	104	1.9
21	**136**	**1.45**	65.62	"	"	5000	-	25	114	1.75
20	**143**	**1.4**	67.53	**BG20Z-../D07LA4**	19	5000	-	24	119	1.7
17.5	**163**	**1.25**	78.60	"	"	5000	-	21	136	1.45
15.5	**184**	**1.1**	87.30	"	"	5000	-	19	150	1.35
14.5	**197**	**1.0**	94.27	"	"	5000	-	17.5	163	1.25
13	**220**	**0.91**	104.7	"	"	5000	-	15.5	184	1.1
12	**235**	**0.85**	112.8	"	"	5000	-	14.5	197	1.0

BG-series helical-geared motors

Selection helical-geared motors DSE -IE1

P = 0.3 kW

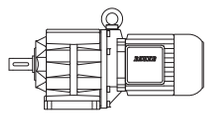

50 Hz			i	Type	m	F_{RN}	F_{RV}	60 Hz		
n_2	M_2	f_B						n_2	M_2	f_B
1/min	Nm				kg	N	N	1/min	Nm	
29	**98**	**3.1**	47.11	**BG30-../D07LA4**	22	6000	-	34.5	83	3.6
26	**110**	**2.7**	52.44	"	"	6000	-	31	92	3.3
23.5	**121**	**2.5**	58.18	"	"	6000	-	28	102	2.9
22.5	**127**	**2.4**	60.79	"	"	6000	-	27	106	2.8
20.5	**139**	**2.2**	67.44	"	"	6000	-	24.5	116	2.6
18.5	**154**	**1.95**	73.51	**BG30Z-../D07LA4**	25	6000	-	22.5	127	2.4
17	**168**	**1.8**	81.55	"	"	6000	-	20	143	2.1
16	**179**	**1.7**	86.13	"	"	6000	-	19	150	2.0
14.5	**197**	**1.5**	95.55	"	"	6000	-	17	168	1.8
12.5	**225**	**1.35**	109.6	"	"	6000	-	15	191	1.55
11.5	**245**	**1.2**	121.6	"	"	6000	-	13.5	210	1.45
11	**260**	**1.15**	128.5	"	"	6000	-	13	220	1.35
9.5	**300**	**1.0**	142.5	"	"	6000	-	11.5	245	1.2
9.0	**315**	**0.95**	151.5	"	"	6000	-	11	260	1.15
8.1	**350**	**0.86**	168.1	"	"	6000	-	9.7	295	1.0
20	**143**	**3.0**	67.74	**BG40Z-../D07LA4**	40	7000	-	24	119	3.6
18	**159**	**2.7**	75.19	"	"	7000	-	22	130	3.3
16.5	**173**	**2.5**	82.00	"	"	7000	-	20	143	3.0
15	**191**	**2.2**	91.02	"	"	7000	-	18	159	2.7
14	**200**	**2.1**	96.86	"	"	7000	-	17	168	2.5
13	**220**	**1.95**	107.5	"	"	7000	-	15.5	184	2.3
11.5	**245**	**1.75**	121.3	"	"	7000	-	13.5	210	2.0
10.5	**270**	**1.55**	134.6	"	"	7000	-	12.5	225	1.9
9.6	**295**	**1.45**	141.4	"	"	7000	-	11.5	245	1.75
8.7	**325**	**1.3**	156.9	"	"	7000	-	10.5	270	1.55
8.2	**345**	**1.25**	166.1	"	"	7000	-	9.8	290	1.45
7.4	**385**	**1.1**	184.4	"	"	7000	-	8.8	325	1.3
6.8	**420**	**1.0**	199.9	"	"	7000	-	8.2	345	1.25
6.1	**465**	**0.91**	221.9	"	"	7000	-	7.4	385	1.1
5.5	**520**	**0.82**	246.5	"	"	7000	-	6.6	430	0.99
4.7	**510**	**0.91**	288.6	**BG40G10-../D07LA4**	46	7000	-	5.7	410	1.15
14.5	**197**	**3.2**	95.58	**BG50Z-../D07LA4**	50	10000	-	17	168	3.8
13	**220**	**2.9**	106.0	"	"	10000	-	15.5	184	3.4
10.5	**270**	**2.3**	128.9	"	"	10000	-	13	220	2.9
9.5	**300**	**2.1**	142.9	"	"	10000	-	11.5	245	2.6
8.2	**345**	**1.85**	164.9	"	"	10000	-	9.9	285	2.2
7.4	**385**	**1.65**	182.8	"	"	10000	-	8.9	320	1.95
6.6	**430**	**1.45**	204.7	"	"	10000	-	8.0	355	1.75
6.0	**475**	**1.35**	226.9	"	"	10000	-	7.2	395	1.6
5.3	**540**	**1.15**	258.6	"	"	10000	-	6.3	450	1.4
4.8	**590**	**1.05**	286.7	"	"	10000	-	5.7	500	1.25
3.9	**630**	**1.1**	351.7	**BG50G10-../D07LA4**	54	10000	-	4.7	510	1.35
3.1	**810**	**0.85**	446.5	"	"	10000	-	3.7	660	1.05
4.9	**465**	**2.8**	276.2	**BG60G20-../D07LA4**	102	16000	-	5.9	365	3.6
4.5	**500**	**2.6**	306.1	"	"	16000	-	5.3	410	3.2
4.1	**550**	**2.4**	334.3	"	"	16000	-	4.9	440	3.0
3.7	**610**	**2.1**	370.5	"	"	16000	-	4.4	495	2.6
3.1	**750**	**1.75**	437.3	"	"	16000	-	3.8	580	2.2
2.7	**910**	**1.45**	504.9	"	"	16000	-	3.3	710	1.85
2.5	**980**	**1.35**	559.5	"	"	16000	-	2.9	820	1.6
2.1	**1190**	**1.1**	651.3	"	"	16000	-	2.5	980	1.35
1.7	**1480**	**0.88**	804.5	"	"	16000	-	2.1	1160	1.1
1.6	**1560**	**0.83**	891.5	"	"	16000	-	1.9	1280	1.0
2.8	**870**	**2.9**	495.9	**BG70G20-../D07LA4**	132	20000	-	3.3	720	3.5
2.4	**1040**	**2.4**	577.3	"	"	20000	-	2.9	840	3.0
2.1	**1190**	**2.1**	665.8	"	"	20000	-	2.5	970	2.6
1.8	**1390**	**1.8**	790.2	"	"	20000	-	2.1	1160	2.2
1.6	**1580**	**1.6**	877.6	"	"	20000	-	1.9	1300	1.9
1.4	**1820**	**1.35**	1035	"	"	20000	-	1.6	1570	1.6
1.2	**2150**	**1.15**	1193	"	"	20000	-	1.4	1810	1.4
1.0	**2600**	**0.96**	1389	"	"	20000	-	1.2	2100	1.2

P = 0.37 kW

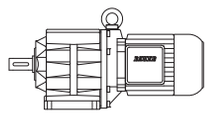

50 Hz			i	Type	m	F_{RN}	F_{RV}	60 Hz		
n_2	M_2	f_B						n_2	M_2	f_B
1/min	Nm				kg	N	N	1/min	Nm	
520	**6.7**	**1.35**	2.64	**BG05-../D07LA4**	11	420	-	620	5.6	1.6
400	**8.8**	**1.15**	3.38	"	"	460	-	480	7.3	1.35
295	**11.9**	**1.0**	4.59	"	"	490	-	355	9.9	1.2
250	**14.1**	**0.99**	5.46	"	"	490	-	300	11.7	1.2
205	**17.2**	**0.93**	6.60	"	"	510	-	250	14.1	1.15
174	**20**	**0.9**	7.80	"	"	530	-	210	16.8	1.05
166	**21**	**0.86**	8.15	"	"	510	-	199	17.7	1.0
159	**22**	**0.86**	8.51	"	"	550	-	191	18.5	1.05
360	**9.8**	**2.0**	3.78	**BG06-../D07LA4**	12	520	-	430	8.2	2.4
300	**11.7**	**1.9**	4.54	"	"	530	-	360	9.8	2.2
230	**15.3**	**1.55**	5.96	"	"	570	-	275	12.8	1.9
193	**18.3**	**1.4**	7.01	"	"	580	-	235	15	1.75
161	**21.5**	**1.3**	8.39	"	"	600	-	194	18.2	1.55
144	**24.5**	**1.2**	9.38	"	"	640	-	173	20	1.5
132	**26.5**	**1.15**	10.24	"	"	640	-	159	22	1.4
120	**29**	**1.1**	11.28	"	"	670	-	144	24.5	1.3
110	**32**	**1.05**	12.30	"	"	670	-	132	26.5	1.25
105	**33.5**	**0.99**	12.98	"	"	600	-	125	28	1.2
92	**38**	**0.89**	14.78	"	"	730	-	110	32	1.05
84	**42**	**0.83**	16.13	"	"	740	-	101	34.5	1.0
78	**45**	**0.84**	17.40	"	"	760	-	94	37.5	1.0
72	**49**	**0.82**	18.98	"	"	770	-	86	41	0.98
103	**34**	**3.2**	13.21	**BG10-../D07LA4**	15	1070	1490	123	28.5	3.9
93	**37.5**	**3.0**	14.58	"	"	1100	1540	112	31.5	3.6
84	**42**	**2.8**	16.15	"	"	1140	1590	101	34.5	3.4
73	**48**	**2.5**	18.51	"	"	1210	1690	88	40	3.0
66	**53**	**2.3**	20.51	"	"	1290	1800	79	44.5	2.7
62	**56**	**2.1**	22.04	"	"	1330	1860	74	47.5	2.5
56	**63**	**1.9**	24.42	"	"	1410	1970	67	52	2.3
52	**67**	**1.8**	26.26	"	"	1460	2000	62	56	2.1
46.5	**75**	**1.6**	29.09	"	"	1540	2150	56	63	1.9
43	**82**	**1.45**	31.52	"	"	1600	2200	52	67	1.8
39	**90**	**1.35**	34.92	"	"	1690	2350	46.5	75	1.6
34.5	**102**	**1.2**	39.70	"	"	1780	2450	41	86	1.4
31	**113**	**1.05**	43.99	"	"	1880	2600	37	95	1.25
29.5	**119**	**1.0**	46.55	"	"	1920	2650	35	100	1.2
26.5	**133**	**0.9**	51.57	"	"	2000	2800	31.5	112	1.05
23.5	**150**	**0.8**	57.48	"	"	2000	2800	28.5	123	0.98
50	**70**	**2.1**	27.08	**BG15-../D07LA4**	15	3000	6000	60	58	2.6
45	**78**	**1.9**	30.08	"	"	3000	6000	54	65	2.3
39.5	**89**	**1.7**	34.20	"	"	3000	6000	47.5	74	2.0
36	**98**	**1.55**	37.90	"	"	3000	6000	43	82	1.85
53	**66**	**3.0**	25.79	**BG20-../D07LA4**	18	3700	-	63	56	3.6
48.5	**72**	**2.8**	27.85	"	"	3800	-	59	59	3.4
44	**80**	**2.5**	30.94	"	"	4000	-	53	66	3.0
41	**86**	**2.3**	33.33	"	"	4100	-	49	72	2.8
36.5	**96**	**2.1**	37.02	"	"	4300	-	44	80	2.5
32.5	**108**	**1.85**	41.76	"	"	4500	-	39	90	2.2
29.5	**119**	**1.7**	46.38	"	"	4700	-	35	100	2.0
28.5	**123**	**1.65**	47.92	"	"	4750	-	34	103	1.95
25.5	**138**	**1.45**	53.22	"	"	4950	-	30.5	115	1.75
23	**153**	**1.3**	59.07	"	"	5000	-	27.5	128	1.55
21	**168**	**1.2**	65.62	"	"	5000	-	25	141	1.4
20	**176**	**1.15**	67.53	**BG20Z-../D07LA4**	19	5000	-	24	147	1.35
17.5	**200**	**1.0**	78.60	"	"	5000	-	21	168	1.2
15.5	**225**	**0.89**	87.30	"	"	5000	-	19	185	1.1
14.5	**240**	**0.83**	94.27	"	"	5000	-	17.5	200	1.0
38.5	**91**	**3.3**	35.17	**BG30-../D07LA4**	22	5500	-	46.5	75	4.0
35	**100**	**3.0**	39.02	"	"	5800	-	42	84	3.6
32	**110**	**2.7**	42.46	"	"	5900	-	38.5	91	3.3

BG-series helical-geared motors

Selection helical-geared motors DSE -IE1

P = 0.37 kW

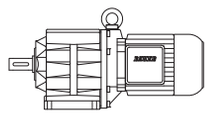

50 Hz			i	Type	m	F_{RN}	F_{RV}	60 Hz		
n_2	M_2	f_B						n_2	M_2	f_B
1/min	Nm				kg	N	N	1/min	Nm	
29	**121**	**2.5**	47.11	**BG30-../D07LA4**	"	6000	-	34.5	102	2.9
26	**135**	**2.2**	52.44	"	"	6000	-	31	113	2.7
23.5	**150**	**2.0**	58.18	"	"	6000	-	28	126	2.4
22.5	**157**	**1.9**	60.79	"	"	6000	-	27	130	2.3
20.5	**172**	**1.75**	67.44	"	"	6000	-	24.5	144	2.1
18.5	**191**	**1.55**	73.51	**BG30Z-../D07LA4**	25	6000	-	22.5	157	1.9
17	**205**	**1.45**	81.55	"	"	6000	-	20	176	1.7
16	**220**	**1.35**	86.13	"	"	6000	-	19	185	1.6
14.5	**240**	**1.25**	95.55	"	"	6000	-	17	205	1.45
12.5	**280**	**1.05**	109.6	"	"	6000	-	15	235	1.3
11.5	**305**	**0.98**	121.6	"	"	6000	-	13.5	260	1.15
11	**320**	**0.94**	128.5	"	"	6000	-	13	270	1.1
9.5	**370**	**0.81**	142.5	"	"	6000	-	11.5	305	0.98
20	**176**	**2.4**	67.74	**BG40Z-../D07LA4**	40	7000	-	24	147	2.9
18	**196**	**2.2**	75.19	"	"	7000	-	22	160	2.7
16.5	**210**	**2.0**	82.00	"	"	7000	-	20	176	2.4
15	**235**	**1.8**	91.02	"	"	7000	-	18	196	2.2
14	**250**	**1.7**	96.86	"	"	7000	-	17	205	2.1
13	**270**	**1.55**	107.5	"	"	7000	-	15.5	225	1.9
11.5	**305**	**1.4**	121.3	"	"	7000	-	13.5	260	1.65
10.5	**335**	**1.25**	134.6	"	"	7000	-	12.5	280	1.5
9.6	**365**	**1.15**	141.4	"	"	7000	-	11.5	305	1.4
8.7	**405**	**1.05**	156.9	"	"	7000	-	10.5	335	1.25
8.2	**430**	**0.99**	166.1	"	"	7000	-	9.8	360	1.2
7.4	**475**	**0.89**	184.4	"	"	7000	-	8.8	400	1.05
6.8	**510**	**0.83**	199.9	"	"	7000	-	8.2	430	0.99
17	**205**	**3.1**	79.78	**BG50Z-../D07LA4**	50	10000	-	20.5	172	3.7
14.5	**240**	**2.6**	95.58	"	"	10000	-	17	205	3.1
13	**270**	**2.3**	106.0	"	"	10000	-	15.5	225	2.8
10.5	**335**	**1.9**	128.9	"	"	10000	-	13	270	2.3
9.5	**370**	**1.7**	142.9	"	"	10000	-	11.5	305	2.1
8.2	**430**	**1.45**	164.9	"	"	10000	-	9.9	355	1.75
7.4	**475**	**1.35**	182.8	"	"	10000	-	8.9	395	1.6
6.6	**530**	**1.2**	204.7	"	"	10000	-	8.0	440	1.45
6.0	**580**	**1.1**	226.9	"	"	10000	-	7.2	490	1.3
5.3	**660**	**0.95**	258.6	"	"	10000	-	6.3	560	1.15
4.8	**730**	**0.86**	286.7	"	"	10000	-	5.7	610	1.05
3.9	**800**	**0.86**	351.7	**BG50G10-../D07LA4**	54	10000	-	4.7	650	1.05
4.9	**600**	**2.2**	276.2	**BG60G20-../D07LA4**	102	16000	-	5.9	480	2.7
4.5	**650**	**2.0**	306.1	"	"	16000	-	5.3	530	2.5
4.1	**720**	**1.8**	334.3	"	"	16000	-	4.9	580	2.2
3.7	**790**	**1.65**	370.5	"	"	16000	-	4.4	640	2.0
3.1	**970**	**1.35**	437.3	"	"	16000	-	3.8	760	1.7
2.7	**1160**	**1.1**	504.9	"	"	16000	-	3.3	920	1.4
2.5	**1240**	**1.05**	559.5	"	"	16000	-	2.9	1050	1.25
2.1	**1510**	**0.86**	651.3	"	"	16000	-	2.5	1240	1.05
3.5	**860**	**2.9**	387.6	**BG70G20-../D07LA4**	132	20000	-	4.2	690	3.6
3.3	**940**	**2.7**	417.8	"	"	20000	-	3.9	780	3.2
2.8	**1110**	**2.3**	495.9	"	"	20000	-	3.3	920	2.7
2.4	**1320**	**1.9**	577.3	"	"	20000	-	2.9	1070	2.3
2.1	**1510**	**1.65**	665.8	"	"	20000	-	2.5	1240	2.0
1.8	**1760**	**1.4**	790.2	"	"	20000	-	2.1	1480	1.7
1.6	**2000**	**1.25**	877.6	"	"	20000	-	1.9	1650	1.5
1.4	**2300**	**1.1**	1035	"	"	20000	-	1.6	1980	1.25
1.2	**2700**	**0.93**	1193	"	"	20000	-	1.4	2250	1.1

P = 0.55 kW

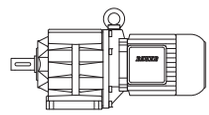

50 Hz			i	Type	m	F_{RN}	F_{RV}	60 Hz		
n_2	M_2	f_B						n_2	M_2	f_B
1/min	Nm				kg	N	N	1/min	Nm	
500	**10.5**	**1.7**	2.82	**BG06-../D08MA4**	16	470	-	600	8.7	2.1
375	**14**	**1.45**	3.78	"	"	520	-	445	11.8	1.7
310	**16.9**	**1.3**	4.54	"	"	530	-	375	14	1.55
235	**22**	**1.1**	5.96	"	"	570	-	285	18.4	1.3
200	**26**	**1.0**	7.01	"	"	580	-	240	21.5	1.2
167	**31**	**0.9**	8.39	"	"	600	-	205	25.5	1.1
150	**35**	**0.86**	9.38	"	"	640	-	180	29	1.05
137	**38**	**0.82**	10.24	"	"	640	-	165	31.5	0.98
210	**25**	**3.2**	6.78	**BG10-../D08MA4**	16	660	920	250	21	3.9
174	**30**	**2.9**	8.07	"	"	660	920	210	25	3.5
151	**34.5**	**2.8**	9.33	"	"	950	1330	181	29	3.3
136	**38.5**	**2.6**	10.34	"	"	1000	1400	163	32	3.1
118	**44.5**	**2.4**	11.92	"	"	1030	1440	141	37	2.8
106	**49.5**	**2.2**	13.21	"	"	1070	1490	128	41	2.7
97	**54**	**2.1**	14.58	"	"	1100	1540	116	45	2.5
87	**60**	**1.95**	16.15	"	"	1140	1590	105	50	2.3
76	**69**	**1.75**	18.51	"	"	1210	1690	91	57	2.1
69	**76**	**1.6**	20.51	"	"	1290	1800	82	64	1.9
64	**82**	**1.45**	22.04	"	"	1330	1860	77	68	1.75
58	**90**	**1.35**	24.42	"	"	1410	1970	69	76	1.6
54	**97**	**1.25**	26.26	"	"	1460	2000	64	82	1.45
48.5	**108**	**1.1**	29.09	"	"	1540	2150	58	90	1.35
44.5	**118**	**1.0**	31.52	"	"	1600	2200	54	97	1.25
40.5	**129**	**0.93**	34.92	"	"	1690	2350	48.5	108	1.1
35.5	**147**	**0.82**	39.70	"	"	1780	2450	42.5	123	0.98
52	**101**	**1.5**	27.08	**BG15-../D08MA4**	16	3000	6000	63	83	1.8
47	**111**	**1.35**	30.08	"	"	3000	6000	56	93	1.6
41	**128**	**1.15**	34.20	"	"	3000	6000	49.5	106	1.4
37	**141**	**1.05**	37.90	"	"	3000	6000	44.5	118	1.25
96	**54**	**3.2**	14.67	**BG20-../D08MA4**	19	3050	-	115	45.5	3.8
90	**58**	**3.1**	15.58	"	"	3100	-	108	48.5	3.6
81	**64**	**2.9**	17.31	"	"	3200	-	98	53	3.5
71	**73**	**2.7**	19.95	"	"	3350	-	85	61	3.2
64	**82**	**2.4**	22.16	"	"	3500	-	76	69	2.9
61	**86**	**2.3**	23.22	"	"	3550	-	73	71	2.8
55	**95**	**2.1**	25.79	"	"	3700	-	66	79	2.5
51	**102**	**1.95**	27.85	"	"	3800	-	61	86	2.3
45.5	**115**	**1.75**	30.94	"	"	4000	-	55	95	2.1
42.5	**123**	**1.65**	33.33	"	"	4100	-	51	102	1.95
38	**138**	**1.45**	37.02	"	"	4300	-	45.5	115	1.75
34	**154**	**1.3**	41.76	"	"	4500	-	40.5	129	1.55
30.5	**172**	**1.15**	46.38	"	"	4700	-	36.5	143	1.4
29.5	**178**	**1.1**	47.92	"	"	4750	-	35.5	147	1.35
26.5	**198**	**1.0**	53.22	"	"	4950	-	32	164	1.2
24	**215**	**0.93**	59.07	"	"	5000	-	28.5	184	1.1
21.5	**240**	**0.83**	65.62	"	"	5000	-	26	200	1.0
21	**250**	**0.8**	67.53	**BG20Z-../D08MA4**	20	5000	-	25	210	0.95
56	**93**	**3.2**	25.45	**BG30-../D08MA4**	23	4850	-	67	78	3.8
50	**105**	**2.9**	28.24	"	"	5100	-	60	87	3.4
47	**111**	**2.7**	29.83	"	"	5200	-	57	92	3.3
42.5	**123**	**2.4**	33.09	"	"	5400	-	51	102	2.9
40	**131**	**2.3**	35.17	"	"	5500	-	48	109	2.8
36	**145**	**2.1**	39.02	"	"	5800	-	43.5	120	2.5
33	**159**	**1.9**	42.46	"	"	5900	-	40	131	2.3
30	**175**	**1.7**	47.11	"	"	6000	-	36	145	2.1
27	**194**	**1.55**	52.44	"	"	6000	-	32.5	161	1.85
24.5	**210**	**1.45**	58.18	"	"	6000	-	29	181	1.65
23.5	**220**	**1.35**	60.79	"	"	6000	-	28	187	1.6
21	**250**	**1.2**	67.44	"	"	6000	-	25	210	1.45
19.5	**265**	**1.15**	73.51	**BG30Z-../D08MA4**	26	6000	-	23	225	1.35
17.5	**300**	**1.0**	81.55	"	"	6000	-	21	250	1.2
16.5	**315**	**0.95**	86.13	"	"	6000	-	20	260	1.15
15	**350**	**0.86**	95.55	"	"	6000	-	18	290	1.05

BG-series helical-geared motors

Selection helical-geared motors DSE -IE1

P = 0.55 kW

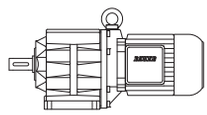

50 Hz			i	Type	m	F_{RN}	F_{RV}	60 Hz		
n_2	M_2	f_B						n_2	M_2	f_B
1/min	Nm				kg	N	N	1/min	Nm	
41	**128**	**3.3**	34.20	**BG40-../D08MA4**	38	7000	-	49.5	106	4.0
37	**141**	**3.0**	37.96	"	"	7000	-	44.5	118	3.6
35	**150**	**2.8**	40.19	"	"	7000	-	42	125	3.4
31.5	**166**	**2.6**	44.62	"	"	7000	-	38	138	3.1
29	**181**	**2.3**	48.36	"	"	7000	-	35	150	2.8
26.5	**198**	**2.1**	53.69	"	"	7000	-	31.5	166	2.6
23.5	**220**	**1.95**	59.64	"	"	7000	-	28.5	184	2.3
21.5	**240**	**1.75**	66.20	"	"	7000	-	25.5	205	2.1
21	**250**	**1.7**	67.74	**BG40Z-../D08MA4**	42	7000	-	25	210	2.0
19	**275**	**1.55**	75.19	"	"	7000	-	22.5	230	1.85
17.5	**300**	**1.4**	82.00	"	"	7000	-	20.5	255	1.65
15.5	**335**	**1.25**	91.02	"	"	7000	-	18.5	280	1.5
14.5	**360**	**1.2**	96.86	"	"	7000	-	17.5	300	1.4
13.5	**385**	**1.1**	107.5	"	"	7000	-	16	325	1.3
12	**435**	**0.98**	121.3	"	"	7000	-	14	375	1.15
10.5	**500**	**0.85**	134.6	"	"	7000	-	12.5	420	1.0
10	**520**	**0.82**	141.4	"	"	7000	-	12	435	0.98
27	**194**	**3.2**	52.12	**BG50-../D08MA4**	46	10000	-	32.5	161	3.9
24	**215**	**2.9**	59.42	"	"	10000	-	28.5	184	3.4
21.5	**240**	**2.6**	65.86	"	"	10000	-	26	200	3.2
19.5	**265**	**2.4**	71.97	**BG50Z-../D08MA4**	51	10000	-	23.5	220	2.9
18	**290**	**2.2**	79.78	"	"	10000	-	21.5	240	2.6
15	**350**	**1.8**	95.58	"	"	10000	-	18	290	2.2
13.5	**385**	**1.65**	106.0	"	"	10000	-	16	325	1.95
11	**475**	**1.35**	128.9	"	"	10000	-	13.5	385	1.65
9.8	**530**	**1.2**	142.9	"	"	10000	-	12	435	1.45
8.5	**610**	**1.05**	164.9	"	"	10000	-	10.5	500	1.25
7.7	**680**	**0.93**	182.8	"	"	10000	-	9.2	570	1.1
6.9	**760**	**0.83**	204.7	"	"	10000	-	8.3	630	1.0
14	**375**	**3.2**	101.0	**BG60Z-../D08MA4**	96	16000	-	17	305	3.9
12	**435**	**2.8**	119.2	"	"	16000	-	14.5	360	3.3
11	**475**	**2.5**	132.1	"	"	16000	-	13	400	3.0
8.9	**590**	**2.0**	158.0	"	"	16000	-	11	475	2.5
8.0	**650**	**1.85**	175.1	"	"	16000	-	9.6	540	2.2
6.9	**760**	**1.6**	204.6	"	"	16000	-	8.3	630	1.9
6.2	**840**	**1.45**	226.7	"	"	16000	-	7.5	700	1.7
5.7	**920**	**1.3**	247.7	"	"	16000	-	6.8	770	1.55
5.2	**1010**	**1.2**	274.5	"	"	16000	-	6.2	840	1.45
5.1	**910**	**1.45**	276.2	**BG60G20-../D08MA4**	103	16000	-	6.1	740	1.75
4.6	**1010**	**1.3**	306.1	"	"	16000	-	5.5	820	1.6
4.2	**1110**	**1.15**	334.3	"	"	16000	-	5.1	880	1.5
3.8	**1220**	**1.05**	370.5	"	"	16000	-	4.6	980	1.35
3.3	**1420**	**0.92**	437.3	"	"	16000	-	3.9	1180	1.1
7.3	**710**	**3.2**	194.4	**BG70Z-../D08MA4**	136	20000	-	8.7	600	3.8
6.7	**780**	**2.9**	210.5	"	"	20000	-	8.0	650	3.5
5.7	**920**	**2.5**	249.8	"	"	20000	-	6.8	770	3.0
5.5	**840**	**3.0**	255.5	**BG70G20-../D08MA4**	133	20000	-	6.6	680	3.7
5.1	**910**	**2.7**	276.7	"	"	20000	-	6.1	740	3.4
4.3	**1080**	**2.3**	328.4	"	"	20000	-	5.2	870	2.9
3.7	**1270**	**1.95**	387.6	"	"	20000	-	4.4	1040	2.4
3.4	**1420**	**1.75**	417.8	"	"	20000	-	4.1	1150	2.2
2.9	**1660**	**1.5**	495.9	"	"	20000	-	3.4	1390	1.8
2.5	**1950**	**1.3**	577.3	"	"	20000	-	3.0	1600	1.55
2.2	**2200**	**1.15**	665.8	"	"	20000	-	2.6	1850	1.35
1.8	**2700**	**0.93**	790.2	"	"	20000	-	2.2	2150	1.15
1.6	**3050**	**0.82**	877.6	"	"	20000	-	2.0	2400	1.05
2.9	**1430**	**3.2**	484.3	**BG80G40-../D08MA4**	215	26000	-	3.5	1120	4.1
2.5	**1720**	**2.7**	572.0	"	"	26000	-	3.0	1370	3.4
2.2	**1900**	**2.4**	657.8	"	"	26000	-	2.6	1540	3.0
2.0	**2100**	**2.2**	730.3	"	"	26000	-	2.4	1690	2.7
1.8	**2350**	**1.95**	817.4	"	"	26000	-	2.1	1970	2.3
1.6	**2700**	**1.7**	907.6	"	"	26000	-	1.9	2200	2.1

P = 0.55 kW

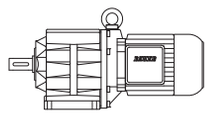

50 Hz			i	Type	m	F_{RN}	F_{RV}	60 Hz		
n_2	M_2	f_B						n_2	M_2	f_B
1/min	Nm				kg	N	N	1/min	Nm	
1.4	**3200**	**1.45**	1042	**BG80G40-../D08MA4**	"	26000	-	1.7	2500	1.85
1.2	**3800**	**1.2**	1261	"	"	26000	-	1.4	3200	1.45
1.0	**4700**	**0.98**	1400	"	"	26000	-	1.2	3800	1.2
1.2	**3700**	**2.5**	1174	**BG90G50-../D08MA4**	324	65000	-	1.5	2800	3.3
1.1	**4100**	**2.2**	1301	"	"	65000	-	1.3	3350	2.7
0.9	**5100**	**1.8**	1583	"	"	65000	-	1.1	4100	2.2
0.8	**5800**	**1.6**	1756	"	"	65000	-	1.0	4550	2.0
0.7	**6800**	**1.35**	2026	"	"	65000	-	0.85	5500	1.65
0.6	**8000**	**1.15**	2514	"	"	65000	-	0.7	6800	1.35
0.55	**8800**	**1.05**	2786	"	"	65000	-	0.65	7400	1.25
0.65	**6000**	**3.1**	2154	**BG100G50-../D08MA4**	512	90000	-	0.8	4500	4.1
0.55	**7100**	**2.6**	2656	"	"	90000	-	0.65	5700	3.2
0.48	**8600**	**2.2**	2952	"	"	90000	-	0.6	6500	2.8
0.43	**9700**	**1.9**	3286	"	"	90000	-	0.55	7000	2.6
0.39	**10900**	**1.7**	3644	"	"	90000	-	0.47	8600	2.2
0.33	**13400**	**1.4**	4366	"	"	90000	-	0.39	10900	1.7
0.29	**15600**	**1.2**	4839	"	"	90000	-	0.35	12500	1.5

P = 0.75 kW

50 Hz			i	Type	m	F_{RN}	F_{RV}	60 Hz		
n_2	M_2	f_B						n_2	M_2	f_B
1/min	Nm				kg	N	N	1/min	Nm	
500	**14.3**	**1.25**	2.82	**BG06-../DSE08LA4**	18	470	-	600	11.9	1.5
375	**19.1**	**1.05**	3.78	"	"	520	-	445	16	1.25
310	**23**	**0.96**	4.54	"	"	530	-	375	19.1	1.15
235	**30**	**0.8**	5.96	"	"	570	-	285	25	0.96
325	**22**	**3.1**	4.36	**BG10-../DSE08LA4**	18	650	910	390	18.3	3.7
265	**27**	**2.8**	5.34	"	"	620	910	315	22.5	3.3
210	**34**	**2.4**	6.78	"	"	660	920	250	28.5	2.8
174	**41**	**2.1**	8.07	"	"	660	920	210	34	2.6
151	**47**	**2.1**	9.33	"	"	950	1330	181	39.5	2.5
136	**52**	**1.9**	10.34	"	"	1000	1400	163	43.5	2.3
118	**60**	**1.75**	11.92	"	"	1030	1440	141	50	2.1
106	**67**	**1.65**	13.21	"	"	1070	1490	128	55	2.0
97	**73**	**1.55**	14.58	"	"	1100	1540	116	61	1.85
87	**82**	**1.45**	16.15	"	"	1140	1590	105	68	1.7
76	**94**	**1.3**	18.51	"	"	1210	1690	91	78	1.55
69	**103**	**1.15**	20.51	"	"	1290	1800	82	87	1.4
64	**111**	**1.1**	22.04	"	"	1330	1860	77	93	1.3
58	**123**	**0.98**	24.42	"	"	1410	1970	69	103	1.15
54	**132**	**0.91**	26.26	"	"	1460	2000	64	111	1.1
48.5	**147**	**0.82**	29.09	"	"	1540	2150	58	123	0.98
52	**137**	**1.1**	27.08	**BG15-../DSE08LA4**	18	3000	6000	63	113	1.35
47	**152**	**0.99**	30.08	"	"	3000	6000	56	127	1.2
41	**174**	**0.86**	34.20	"	"	3000	6000	49.5	144	1.05
169	**42**	**2.9**	8.29	**BG20-../DSE08LA4**	20	2250	-	205	34.5	3.5
158	**45**	**3.2**	8.91	"	"	2600	-	189	37.5	3.8
146	**49**	**2.5**	9.65	"	"	2250	-	175	40.5	3.0
133	**53**	**2.9**	10.54	"	"	2700	-	160	44.5	3.5
120	**59**	**2.7**	11.71	"	"	2800	-	144	49.5	3.2
106	**67**	**2.5**	13.21	"	"	2900	-	128	55	3.0
96	**74**	**2.3**	14.67	"	"	3050	-	115	62	2.8
90	**79**	**2.2**	15.58	"	"	3100	-	108	66	2.7
81	**88**	**2.1**	17.31	"	"	3200	-	98	73	2.5
71	**100**	**1.95**	19.95	"	"	3350	-	85	84	2.3
64	**111**	**1.8**	22.16	"	"	3500	-	76	94	2.1
61	**117**	**1.7**	23.22	"	"	3550	-	73	98	2.0
55	**130**	**1.55**	25.79	"	"	3700	-	66	108	1.85

BG-series helical-geared motors

Selection helical-geared motors DSE -IE1

P = 0.75 kW

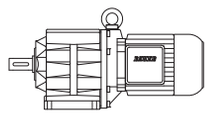

50 Hz			i	Type	m	F_{RN}	F_{RV}	60 Hz		
n_2	M_2	f_B						n_2	M_2	f_B
1/min	Nm				kg	N	N	1/min	Nm	
51	**140**	**1.45**	27.85	**BG20-../DSE08LA4**	"	3800	-	61	117	1.7
45.5	**157**	**1.25**	30.94	"	"	4000	-	55	130	1.55
42.5	**168**	**1.2**	33.33	"	"	4100	-	51	140	1.45
38	**188**	**1.05**	37.02	"	"	4300	-	45.5	157	1.25
34	**210**	**0.95**	41.76	"	"	4500	-	40.5	176	1.15
30.5	**230**	**0.87**	46.38	"	"	4700	-	36.5	196	1.0
29.5	**240**	**0.83**	47.92	"	"	4750	-	35.5	200	1.0
74	**96**	**3.1**	18.93	**BG30-../DSE08LA4**	25	4100	-	89	80	3.8
71	**100**	**3.0**	19.99	"	"	4200	-	85	84	3.6
64	**111**	**2.7**	22.18	"	"	4600	-	76	94	3.2
56	**127**	**2.4**	25.45	"	"	4850	-	67	106	2.8
50	**143**	**2.1**	28.24	"	"	5100	-	60	119	2.5
47	**152**	**1.95**	29.83	"	"	5200	-	57	125	2.4
42.5	**168**	**1.8**	33.09	"	"	5400	-	51	140	2.1
40	**179**	**1.7**	35.17	"	"	5500	-	48	149	2.0
36	**198**	**1.5**	39.02	"	"	5800	-	43.5	164	1.85
33	**215**	**1.4**	42.46	"	"	5900	-	40	179	1.7
30	**235**	**1.3**	47.11	"	"	6000	-	36	198	1.5
27	**265**	**1.15**	52.44	"	"	6000	-	32.5	220	1.35
24.5	**290**	**1.05**	58.18	"	"	6000	-	29	245	1.2
23.5	**300**	**1.0**	60.79	"	"	6000	-	28	255	1.2
21	**340**	**0.88**	67.44	"	"	6000	-	25	285	1.05
19.5	**365**	**0.82**	73.51	**BG30Z-../DSE08LA4**	28	6000	-	23	310	0.97
54	**132**	**3.2**	26.01	**BG40-../DSE08LA4**	40	6500	-	65	110	3.9
48	**149**	**2.9**	29.34	"	"	6800	-	58	123	3.5
43	**166**	**2.6**	32.57	"	"	7000	-	52	137	3.1
41	**174**	**2.4**	34.20	"	"	7000	-	49.5	144	3.0
37	**193**	**2.2**	37.96	"	"	7000	-	44.5	160	2.7
35	**200**	**2.1**	40.19	"	"	7000	-	42	170	2.5
31.5	**225**	**1.9**	44.62	"	"	7000	-	38	188	2.3
29	**245**	**1.75**	48.36	"	"	7000	-	35	200	2.1
26.5	**270**	**1.55**	53.69	"	"	7000	-	31.5	225	1.9
23.5	**300**	**1.4**	59.64	"	"	7000	-	28.5	250	1.7
21.5	**330**	**1.3**	66.20	"	"	7000	-	25.5	280	1.5
21	**340**	**1.25**	67.74	**BG40Z-../DSE08LA4**	43	7000	-	25	285	1.5
19	**375**	**1.15**	75.19	"	"	7000	-	22.5	315	1.35
17.5	**405**	**1.05**	82.00	"	"	7000	-	20.5	345	1.25
15.5	**460**	**0.92**	91.02	"	"	7000	-	18.5	385	1.1
14.5	**490**	**0.87**	96.86	"	"	7000	-	17.5	405	1.05
13.5	**530**	**0.8**	107.5	"	"	7000	-	16	445	0.96
37	**193**	**3.3**	37.89	**BG50-../DSE08LA4**	48	10000	-	44.5	160	3.9
33.5	**210**	**3.0**	42.00	"	"	10000	-	40	179	3.5
30	**235**	**2.7**	47.02	"	"	10000	-	36	198	3.2
27	**265**	**2.4**	52.12	"	"	10000	-	32.5	220	2.9
24	**295**	**2.1**	59.42	"	"	10000	-	28.5	250	2.5
21.5	**330**	**1.9**	65.86	"	"	10000	-	26	275	2.3
19.5	**365**	**1.75**	71.97	**BG50Z-../DSE08LA4**	52	10000	-	23.5	300	2.1
18	**395**	**1.6**	79.78	"	"	10000	-	21.5	330	1.9
15	**475**	**1.35**	95.58	"	"	10000	-	18	395	1.6
13.5	**530**	**1.2**	106.0	"	"	10000	-	16	445	1.4
11	**650**	**0.97**	128.9	"	"	10000	-	13.5	530	1.2
9.8	**730**	**0.86**	142.9	"	"	10000	-	12	590	1.05
18.5	**385**	**3.1**	75.71	**BG60Z-../DSE08LA4**	97	16000	-	22.5	315	3.8
15.5	**460**	**2.6**	91.09	"	"	16000	-	18.5	385	3.1
14	**510**	**2.4**	101.0	"	"	16000	-	17	420	2.9
12	**590**	**2.0**	119.2	"	"	16000	-	14.5	490	2.4
11	**650**	**1.85**	132.1	"	"	16000	-	13	550	2.2
8.9	**800**	**1.5**	158.0	"	"	16000	-	11	650	1.85
8.0	**890**	**1.35**	175.1	"	"	16000	-	9.6	740	1.6
6.9	**1030**	**1.15**	204.6	"	"	16000	-	8.3	860	1.4
6.2	**1150**	**1.05**	226.7	"	"	16000	-	7.5	950	1.25
5.7	**1250**	**0.96**	247.7	"	"	16000	-	6.8	1050	1.15
5.2	**1370**	**0.88**	274.5	"	"	16000	-	6.2	1150	1.05

P = 0.75 kW

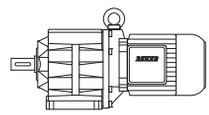

50 Hz			i	Type	m	F_{RN}	F_{RV}	60 Hz		
n_2	M_2	f_B						n_2	M_2	f_B
1/min	Nm				kg	N	N	1/min	Nm	
5.1	**1280**	**1.0**	276.2	**BG60G20-../DSE08LA4**	105	16000	-	6.1	1050	1.25
4.6	**1420**	**0.92**	306.1	"	"	16000	-	5.5	1170	1.1
4.2	**1560**	**0.83**	334.3	"	"	16000	-	5.1	1260	1.05
9.6	**740**	**3.1**	147.2	**BG70Z-../DSE08LA4**	137	20000	-	11.5	620	3.7
8.6	**830**	**2.8**	163.8	"	"	20000	-	10.5	680	3.4
7.3	**980**	**2.3**	194.4	"	"	20000	-	8.7	820	2.8
6.7	**1060**	**2.2**	210.5	"	"	20000	-	8.0	890	2.6
5.7	**1250**	**1.85**	249.8	"	"	20000	-	6.8	1050	2.2
5.5	**1190**	**2.1**	255.5	**BG70G20-../DSE08LA4**	135	20000	-	6.6	970	2.6
5.1	**1280**	**1.95**	276.7	"	"	20000	-	6.1	1050	2.4
4.3	**1520**	**1.65**	328.4	"	"	20000	-	5.2	1230	2.0
3.7	**1780**	**1.4**	387.6	"	"	20000	-	4.4	1480	1.7
3.4	**1980**	**1.25**	417.8	"	"	20000	-	4.1	1620	1.55
2.9	**2300**	**1.1**	495.9	"	"	20000	-	3.4	1960	1.3
2.5	**2700**	**0.93**	577.3	"	"	20000	-	3.0	2200	1.15
2.2	**3050**	**0.82**	665.8	"	"	20000	-	2.6	2550	0.98
3.9	**1490**	**3.1**	360.0	**BG80G40-../DSE08LA4**	216	26000	-	4.7	1180	3.9
3.6	**1610**	**2.9**	399.8	"	"	26000	-	4.3	1290	3.6
3.3	**1830**	**2.5**	436.2	"	"	26000	-	3.9	1490	3.1
2.9	**2050**	**2.2**	484.3	"	"	26000	-	3.5	1670	2.8
2.5	**2450**	**1.9**	572.0	"	"	26000	-	3.0	2000	2.3
2.2	**2750**	**1.65**	657.8	"	"	26000	-	2.6	2250	2.0
2.0	**3050**	**1.5**	730.3	"	"	26000	-	2.4	2450	1.9
1.8	**3450**	**1.35**	817.4	"	"	26000	-	2.1	2850	1.6
1.6	**3900**	**1.2**	907.6	"	"	26000	-	1.9	3200	1.45
1.4	**4550**	**1.0**	1042	"	"	26000	-	1.7	3650	1.25
1.2	**5400**	**0.85**	1261	"	"	26000	-	1.4	4550	1.0
2.0	**2900**	**3.2**	714.2	**BG90G50-../DSE08LA4**	326	65000	-	2.4	2300	4.0
1.6	**3800**	**2.4**	883.7	"	"	65000	-	2.0	2900	3.2
1.2	**5200**	**1.75**	1174	"	"	65000	-	1.5	4100	2.2
1.1	**5800**	**1.6**	1301	"	"	65000	-	1.3	4800	1.9
0.9	**7200**	**1.3**	1583	"	"	65000	-	1.1	5800	1.6
0.8	**8200**	**1.1**	1756	"	"	65000	-	1.0	6400	1.45
1.0	**5700**	**3.2**	1444	**BG100G50-../DSE08LA4**	513	90000	-	1.2	4550	4.1
0.85	**6800**	**2.7**	1678	"	"	90000	-	1.1	4900	3.8
0.75	**7700**	**2.4**	1867	"	"	90000	-	0.9	6100	3.0
0.65	**8900**	**2.1**	2154	"	"	90000	-	0.8	6800	2.7
0.55	**10600**	**1.75**	2656	"	"	90000	-	0.65	8600	2.2
0.48	**12600**	**1.45**	2952	"	"	90000	-	0.6	9600	1.95
0.43	**14100**	**1.3**	3286	"	"	90000	-	0.55	10500	1.75
0.39	**15800**	**1.15**	3644	"	"	90000	-	0.47	12700	1.45

P = 1.1 kW

50 Hz			i	Type	m	F_{RN}	F_{RV}	60 Hz		
n_2	M_2	f_B						n_2	M_2	f_B
1/min	Nm				kg	N	N	1/min	Nm	
500	**21**	**0.86**	2.82	**BG06-../DSE08XA4**	19	470	-	600	17.5	1.05
560	**18.7**	**3.0**	2.52	**BG10-../DSE08XA4**	19	560	790	670	15.6	3.6
410	**25.5**	**2.4**	3.42	"	"	630	880	495	21	3.0
325	**32**	**2.1**	4.36	"	"	650	910	390	26.5	2.6
265	**39.5**	**1.9**	5.34	"	"	620	910	315	33	2.3
210	**50**	**1.6**	6.78	"	"	660	920	250	42	1.95
174	**60**	**1.45**	8.07	"	"	660	920	210	50	1.75
151	**69**	**1.4**	9.33	"	"	950	1330	181	58	1.65
136	**77**	**1.3**	10.34	"	"	1000	1400	163	64	1.55
118	**89**	**1.2**	11.92	"	"	1030	1440	141	74	1.4
106	**99**	**1.1**	13.21	"	"	1070	1490	128	82	1.35
97	**108**	**1.05**	14.58	"	"	1100	1540	116	90	1.25
87	**120**	**0.98**	16.15	"	"	1140	1590	105	100	1.15
76	**138**	**0.87**	18.51	"	"	1210	1690	91	115	1.05

BG-series helical-geared motors

Selection helical-geared motors DSE -IE1

P = 1.1 kW

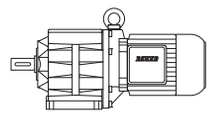

50 Hz			i	Type	m	F_{RN}	F_{RV}	60 Hz		
n_2	M_2	f_B						n_2	M_2	f_B
1/min	Nm				kg	N	N	1/min	Nm	
320	**32.5**	**3.2**	4.38	**BG20-../DSE08XA4**	22	1990	-	385	27	3.9
260	**40**	**2.9**	5.49	"	"	2100	-	310	33.5	3.4
220	**47.5**	**2.6**	6.48	"	"	2250	-	260	40	3.1
175	**60**	**2.3**	8.02	"	"	2500	-	210	50	2.7
169	**62**	**1.95**	8.29	"	"	2250	-	205	51	2.4
158	**66**	**2.2**	8.91	"	"	2600	-	189	55	2.6
146	**71**	**1.7**	9.65	"	"	2250	-	175	60	2.0
133	**78**	**1.95**	10.54	"	"	2700	-	160	65	2.4
120	**87**	**1.8**	11.71	"	"	2800	-	144	72	2.2
106	**99**	**1.7**	13.21	"	"	2900	-	128	82	2.0
96	**109**	**1.6**	14.67	"	"	3050	-	115	91	1.9
90	**116**	**1.55**	15.58	"	"	3100	-	108	97	1.8
81	**129**	**1.4**	17.31	"	"	3200	-	98	107	1.7
71	**147**	**1.35**	19.95	"	"	3350	-	85	123	1.6
64	**164**	**1.2**	22.16	"	"	3500	-	76	138	1.45
61	**172**	**1.15**	23.22	"	"	3550	-	73	143	1.4
55	**191**	**1.05**	25.79	"	"	3700	-	66	159	1.25
51	**205**	**0.98**	27.85	"	"	3800	-	61	172	1.15
45.5	**230**	**0.87**	30.94	"	"	4000	-	55	191	1.05
42.5	**245**	**0.82**	33.33	"	"	4100	-	51	205	0.98
119	**88**	**3.1**	11.82	**BG30-../DSE08XA4**	26	3200	-	143	73	3.8
102	**102**	**2.9**	13.77	"	"	3150	-	123	85	3.5
92	**114**	**2.6**	15.27	"	"	3450	-	111	94	3.2
83	**126**	**2.4**	17.06	"	"	3700	-	99	106	2.8
74	**141**	**2.1**	18.93	"	"	4100	-	89	118	2.5
71	**147**	**2.0**	19.99	"	"	4200	-	85	123	2.4
64	**164**	**1.85**	22.18	"	"	4600	-	76	138	2.2
56	**187**	**1.6**	25.45	"	"	4850	-	67	156	1.9
50	**210**	**1.45**	28.24	"	"	5100	-	60	175	1.7
47	**220**	**1.35**	29.83	"	"	5200	-	57	184	1.65
42.5	**245**	**1.2**	33.09	"	"	5400	-	51	205	1.45
40	**260**	**1.15**	35.17	"	"	5500	-	48	215	1.4
36	**290**	**1.05**	39.02	"	"	5800	-	43.5	240	1.25
33	**315**	**0.95**	42.46	"	"	5900	-	40	260	1.15
30	**350**	**0.86**	47.11	"	"	6000	-	36	290	1.05
77	**136**	**3.1**	18.19	**BG40-../DSE08XA4**	41	5600	-	93	112	3.8
71	**147**	**2.9**	19.84	"	"	5800	-	85	123	3.5
64	**164**	**2.6**	22.02	"	"	6000	-	77	136	3.1
60	**175**	**2.4**	23.43	"	"	6200	-	72	145	2.9
54	**194**	**2.2**	26.01	"	"	6500	-	65	161	2.6
48	**215**	**2.0**	29.34	"	"	6800	-	58	181	2.3
43	**240**	**1.75**	32.57	"	"	7000	-	52	200	2.1
41	**255**	**1.65**	34.20	"	"	7000	-	49.5	210	2.0
37	**280**	**1.5**	37.96	"	"	7000	-	44.5	235	1.8
35	**300**	**1.4**	40.19	"	"	7000	-	42	250	1.7
31.5	**330**	**1.3**	44.62	"	"	7000	-	38	275	1.55
29	**360**	**1.2**	48.36	"	"	7000	-	35	300	1.4
26.5	**395**	**1.1**	53.69	"	"	7000	-	31.5	330	1.3
23.5	**445**	**0.96**	59.64	"	"	7000	-	28.5	365	1.15
21.5	**485**	**0.88**	66.20	"	"	7000	-	25.5	410	1.05
21	**500**	**0.85**	67.74	**BG40Z-../DSE08XA4**	44	7000	-	25	420	1.0
47.5	**220**	**2.9**	29.62	**BG50-../DSE08XA4**	48	8000	-	57	184	3.4
43	**240**	**2.6**	32.84	"	"	8700	-	52	200	3.2
37	**280**	**2.3**	37.89	"	"	10000	-	44.5	235	2.7
33.5	**310**	**2.0**	42.00	"	"	10000	-	40	260	2.4
30	**350**	**1.8**	47.02	"	"	10000	-	36	290	2.2
27	**385**	**1.65**	52.12	"	"	10000	-	32.5	320	1.95
24	**435**	**1.45**	59.42	"	"	10000	-	28.5	365	1.75
21.5	**485**	**1.3**	65.86	"	"	10000	-	26	400	1.6
19.5	**530**	**1.2**	71.97	**BG50Z-../DSE08XA4**	53	10000	-	23.5	445	1.4
18	**580**	**1.1**	79.78	"	"	10000	-	21.5	485	1.3
15	**700**	**0.9**	95.58	"	"	10000	-	18	580	1.1
13.5	**770**	**0.82**	106.0	"	"	10000	-	16	650	0.97

P = 1.1 kW

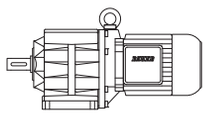

50 Hz			i	Type	m	F_{RN}	F_{RV}	60 Hz		
n_2	M_2	f_B						n_2	M_2	f_B
1/min	Nm				kg	N	N	1/min	Nm	
20.5	**510**	**2.4**	68.32	**BG60Z-../DSE08XA4**	98	16000	-	25	420	2.9
18.5	**560**	**2.1**	75.71	"	"	16000	-	22.5	465	2.6
15.5	**670**	**1.8**	91.09	"	"	16000	-	18.5	560	2.1
14	**750**	**1.6**	101.0	"	"	16000	-	17	610	1.95
12	**870**	**1.4**	119.2	"	"	16000	-	14.5	720	1.65
11	**950**	**1.25**	132.1	"	"	16000	-	13	800	1.5
8.9	**1180**	**1.0**	158.0	"	"	16000	-	11	950	1.25
8.0	**1310**	**0.92**	175.1	"	"	16000	-	9.6	1090	1.1
15	**700**	**3.3**	95.74	**BG70Z-../DSE08XA4**	138	20000	-	18	580	4.0
12.5	**840**	**2.7**	113.6	"	"	20000	-	15	700	3.3
11.5	**910**	**2.5**	124.0	"	"	20000	-	14	750	3.1
9.6	**1090**	**2.1**	147.2	"	"	20000	-	11.5	910	2.5
8.6	**1220**	**1.9**	163.8	"	"	20000	-	10.5	1000	2.3
7.3	**1430**	**1.6**	194.4	"	"	20000	-	8.7	1200	1.9
6.7	**1560**	**1.45**	210.5	"	"	20000	-	8.0	1310	1.75
5.7	**1840**	**1.25**	249.8	"	"	20000	-	6.8	1540	1.5
5.5	**1800**	**1.4**	255.5	**BG70G20-../DSE08XA4**	136	20000	-	6.6	1480	1.7
5.1	**1940**	**1.3**	276.7	"	"	20000	-	6.1	1600	1.55
4.3	**2300**	**1.1**	328.4	"	"	20000	-	5.2	1880	1.35
3.7	**2650**	**0.94**	387.6	"	"	20000	-	4.4	2200	1.15
3.4	**2950**	**0.85**	417.8	"	"	20000	-	4.1	2400	1.05
6.2	**1410**	**3.3**	227.2	**BG80G40-../DSE08XA4**	217	26000	-	7.4	1140	4.0
5.6	**1560**	**2.9**	252.3	"	"	26000	-	6.7	1250	3.7
5.0	**1790**	**2.6**	282.8	"	"	26000	-	6.0	1440	3.2
4.5	**1990**	**2.3**	314.0	"	"	26000	-	5.4	1600	2.9
3.9	**2350**	**1.95**	360.0	"	"	26000	-	4.7	1890	2.4
3.6	**2500**	**1.85**	399.8	"	"	26000	-	4.3	2050	2.2
3.3	**2800**	**1.65**	436.2	"	"	26000	-	3.9	2350	1.95
2.9	**3200**	**1.45**	484.3	"	"	26000	-	3.5	2600	1.75
2.5	**3800**	**1.2**	572.0	"	"	26000	-	3.0	3100	1.5
2.2	**4250**	**1.1**	657.8	"	"	26000	-	2.6	3550	1.3
2.0	**4750**	**0.97**	730.3	"	"	26000	-	2.4	3850	1.2
1.8	**5300**	**0.87**	817.4	"	"	26000	-	2.1	4450	1.05
3.3	**2750**	**3.3**	435.8	**BG90G50-../DSE08XA4**	327	65000	-	3.9	2300	4.0
2.8	**3250**	**2.8**	504.7	"	"	65000	-	3.4	2600	3.5
2.4	**3800**	**2.4**	588.8	"	"	65000	-	2.9	3050	3.0
2.2	**4150**	**2.2**	644.7	"	"	65000	-	2.7	3250	2.8
2.0	**4600**	**2.0**	714.2	"	"	65000	-	2.4	3700	2.5
1.6	**5800**	**1.6**	883.7	"	"	65000	-	2.0	4550	2.0
1.2	**8000**	**1.15**	1174	"	"	65000	-	1.5	6300	1.45
1.1	**8800**	**1.05**	1301	"	"	65000	-	1.3	7400	1.25
1.4	**6100**	**3.0**	1043	**BG100G50-../DSE08XA4**	514	90000	-	1.7	4750	3.9
1.2	**7100**	**2.6**	1204	"	"	90000	-	1.4	5800	3.2
1.0	**9100**	**2.0**	1444	"	"	90000	-	1.2	7300	2.5
0.85	**10700**	**1.75**	1678	"	"	90000	-	1.1	7900	2.3
0.75	**12200**	**1.5**	1867	"	"	90000	-	0.9	9800	1.9
0.65	**14100**	**1.3**	2154	"	"	90000	-	0.8	11000	1.7
0.55	**16700**	**1.1**	2656	"	"	90000	-	0.65	13700	1.35

P = 1.5 kW

50 Hz			i	Type	m	F_{RN}	F_{RV}	60 Hz		
n_2	M_2	f_B						n_2	M_2	f_B
1/min	Nm				kg	N	N	1/min	Nm	
570	**25**	**2.2**	2.52	**BG10-../DSE09LA4**	26	560	790	680	21	2.7
420	**34**	**1.8**	3.42	"	"	630	880	500	28.5	2.2
330	**43**	**1.6**	4.36	"	"	650	910	395	36	1.9
270	**53**	**1.4**	5.34	"	"	620	910	325	44	1.7
210	**68**	**1.2**	6.78	"	"	660	920	255	56	1.45
176	**81**	**1.1**	8.07	"	"	660	920	215	66	1.35
153	**93**	**1.05**	9.33	"	"	950	1330	184	77	1.25
138	**103**	**0.96**	10.34	"	"	1000	1400	166	86	1.15

BG-series helical-geared motors

Selection helical-geared motors DSE -IE1

P = 1.5 kW

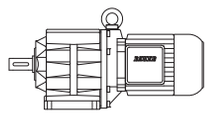

50 Hz			i	Type	m	F_{RN}	F_{RV}	60 Hz		
n_2	M_2	f_B						n_2	M_2	f_B
1/min	Nm				kg	N	N	1/min	Nm	
120	**119**	**0.88**	11.92	**BG10-../DSE09LA4**	"	1030	1440	144	99	1.05
108	**132**	**0.83**	13.21	"	"	1070	1490	130	110	1.0
430	**33**	**2.8**	3.33	**BG20-../DSE09LA4**	28	1830	-	520	27.5	3.3
325	**44**	**2.4**	4.38	"	"	1990	-	395	36	2.9
260	**55**	**2.1**	5.49	"	"	2100	-	315	45	2.6
220	**65**	**1.9**	6.48	"	"	2250	-	265	54	2.3
178	**80**	**1.7**	8.02	"	"	2500	-	215	66	2.1
172	**83**	**1.45**	8.29	"	"	2250	-	210	68	1.8
160	**89**	**1.6**	8.91	"	"	2600	-	192	74	1.95
148	**96**	**1.25**	9.65	"	"	2250	-	178	80	1.55
135	**106**	**1.45**	10.54	"	"	2700	-	163	87	1.75
122	**117**	**1.35**	11.71	"	"	2800	-	147	97	1.65
108	**132**	**1.25**	13.21	"	"	2900	-	130	110	1.5
97	**147**	**1.15**	14.67	"	"	3050	-	117	122	1.4
92	**155**	**1.15**	15.58	"	"	3100	-	110	130	1.35
83	**172**	**1.05**	17.31	"	"	3200	-	99	144	1.25
72	**198**	**0.98**	19.95	"	"	3350	-	86	166	1.15
65	**220**	**0.91**	22.16	"	"	3500	-	78	183	1.1
62	**230**	**0.87**	23.22	"	"	3550	-	74	193	1.05
215	**66**	**3.3**	6.75	**BG30-../DSE09LA4**	33	1760	-	255	56	3.9
180	**79**	**2.7**	7.91	"	"	1760	-	220	65	3.3
166	**86**	**2.9**	8.60	"	"	2800	-	199	71	3.5
149	**96**	**2.6**	9.55	"	"	3000	-	180	79	3.2
134	**106**	**2.5**	10.65	"	"	2950	-	161	88	3.0
121	**118**	**2.3**	11.82	"	"	3200	-	145	98	2.8
104	**137**	**2.1**	13.77	"	"	3150	-	125	114	2.6
93	**154**	**1.95**	15.27	"	"	3450	-	112	127	2.4
84	**170**	**1.75**	17.06	"	"	3700	-	101	141	2.1
76	**188**	**1.6**	18.93	"	"	4100	-	91	157	1.9
72	**198**	**1.5**	19.99	"	"	4200	-	86	166	1.8
65	**220**	**1.35**	22.18	"	"	4600	-	78	183	1.65
56	**255**	**1.2**	25.45	"	"	4850	-	68	210	1.45
51	**280**	**1.05**	28.24	"	"	5100	-	61	230	1.3
48	**295**	**1.0**	29.83	"	"	5200	-	58	245	1.2
43	**330**	**0.91**	33.09	"	"	5400	-	52	275	1.1
40.5	**350**	**0.86**	35.17	"	"	5500	-	49	290	1.05
158	**90**	**3.3**	9.00	**BG40-../DSE09LA4**	47	2650	-	190	75	3.9
111	**129**	**3.2**	12.86	"	"	4500	-	133	107	3.8
100	**143**	**2.9**	14.28	"	"	4900	-	120	119	3.5
87	**164**	**2.6**	16.39	"	"	5300	-	105	136	3.1
79	**181**	**2.3**	18.19	"	"	5600	-	95	150	2.8
72	**198**	**2.1**	19.84	"	"	5800	-	87	164	2.6
65	**220**	**1.95**	22.02	"	"	6000	-	78	183	2.3
61	**230**	**1.85**	23.43	"	"	6200	-	73	196	2.2
55	**260**	**1.65**	26.01	"	"	6500	-	66	215	2.0
48.5	**295**	**1.45**	29.34	"	"	6800	-	59	240	1.75
44	**325**	**1.3**	32.57	"	"	7000	-	53	270	1.55
42	**340**	**1.25**	34.20	"	"	7000	-	50	285	1.5
37.5	**380**	**1.1**	37.96	"	"	7000	-	45.5	310	1.35
35.5	**400**	**1.05**	40.19	"	"	7000	-	43	330	1.3
32	**445**	**0.96**	44.62	"	"	7000	-	38.5	370	1.15
29.5	**485**	**0.88**	48.36	"	"	7000	-	35.5	400	1.05
65	**220**	**2.9**	21.96	**BG50-../DSE09LA4**	55	8000	-	78	183	3.4
59	**240**	**2.6**	24.34	"	"	8700	-	71	200	3.2
48	**295**	**2.1**	29.62	"	"	8000	-	58	245	2.6
43.5	**325**	**1.95**	32.84	"	"	8700	-	53	270	2.3
37.5	**380**	**1.65**	37.89	"	"	10000	-	45.5	310	2.0
34	**420**	**1.5**	42.00	"	"	10000	-	41	345	1.85
30.5	**465**	**1.35**	47.02	"	"	10000	-	36.5	390	1.6
27.5	**520**	**1.2**	52.12	"	"	10000	-	33	430	1.45
24	**590**	**1.05**	59.42	"	"	10000	-	29	490	1.3
22	**650**	**0.97**	65.86	"	"	10000	-	26	550	1.15

P = 1.5 kW

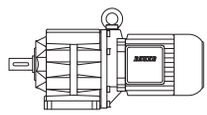

50 Hz			i	Type	m	F_{RN}	F_{RV}	60 Hz		
n_2	M_2	f_B						n_2	M_2	f_B
1/min	Nm				kg	N	N	1/min	Nm	
20	**710**	**0.89**	71.97	**BG50Z-../DSE09LA4**	60	10000	-	24	590	1.05
18	**790**	**0.8**	79.78	"	"	10000	-	21.5	660	0.95
37	**385**	**3.1**	38.85	**BG60-../DSE09LA4**	86	16000	-	44.5	320	3.8
33	**430**	**2.8**	43.05	"	"	16000	-	40	355	3.4
28.5	**500**	**2.4**	50.31	"	"	16000	-	34	420	2.9
25.5	**560**	**2.1**	55.76	"	"	16000	-	31	460	2.6
23.5	**600**	**2.0**	60.90	"	"	16000	-	28.5	500	2.4
21.5	**660**	**1.8**	67.49	"	"	16000	-	25.5	560	2.1
21	**680**	**1.75**	68.32	**BG60Z-../DSE09LA4**	105	16000	-	25.5	560	2.1
19	**750**	**1.6**	75.71	"	"	16000	-	23	620	1.95
16	**890**	**1.35**	91.09	"	"	16000	-	19	750	1.6
14.5	**980**	**1.2**	101.0	"	"	16000	-	17	840	1.45
12	**1190**	**1.0**	119.2	"	"	16000	-	14.5	980	1.2
11	**1300**	**0.92**	132.1	"	"	16000	-	13	1100	1.1
19.5	**730**	**3.2**	73.82	**BG70Z-../DSE09LA4**	145	20000	-	23.5	600	3.8
16.5	**860**	**2.7**	87.61	"	"	20000	-	20	710	3.2
15	**950**	**2.4**	95.74	"	"	20000	-	18	790	2.9
12.5	**1140**	**2.0**	113.6	"	"	20000	-	15.5	920	2.5
11.5	**1240**	**1.85**	124.0	"	"	20000	-	14	1020	2.3
9.7	**1470**	**1.55**	147.2	"	"	20000	-	12	1190	1.95
8.7	**1640**	**1.4**	163.8	"	"	20000	-	10.5	1360	1.7
7.4	**1930**	**1.2**	194.4	"	"	20000	-	8.8	1620	1.4
6.8	**2100**	**1.1**	210.5	"	"	20000	-	8.2	1740	1.3
5.7	**2500**	**0.92**	249.8	"	"	20000	-	6.9	2050	1.1
5.6	**2450**	**1.0**	255.5	**BG70G20-../DSE09LA4**	142	20000	-	6.7	2000	1.25
5.2	**2600**	**0.96**	276.7	"	"	20000	-	6.2	2150	1.15
4.4	**3100**	**0.81**	328.4	"	"	20000	-	5.3	2550	0.98
9.8	**1460**	**2.9**	145.4	**BG80Z-../DSE09LA4**	213	26000	-	12	1190	3.5
8.8	**1620**	**2.6**	161.5	"	"	26000	-	11	1300	3.2
7.7	**1860**	**2.3**	186.8	"	"	26000	-	9.2	1550	2.7
6.9	**2050**	**2.0**	207.4	"	"	26000	-	8.3	1720	2.4
6.3	**1990**	**2.3**	227.2	**BG80G40-../DSE09LA4**	224	26000	-	7.6	1600	2.9
5.7	**2200**	**2.1**	252.3	"	"	26000	-	6.8	1790	2.6
5.1	**2500**	**1.85**	282.8	"	"	26000	-	6.1	2000	2.3
4.6	**2750**	**1.65**	314.0	"	"	26000	-	5.5	2250	2.0
4.0	**3200**	**1.45**	360.0	"	"	26000	-	4.8	2600	1.75
3.6	**3600**	**1.3**	399.8	"	"	26000	-	4.3	2950	1.55
3.3	**4000**	**1.15**	436.2	"	"	26000	-	4.0	3200	1.45
3.0	**4350**	**1.05**	484.3	"	"	26000	-	3.6	3600	1.3
2.5	**5300**	**0.87**	572.0	"	"	26000	-	3.0	4350	1.05
4.0	**3050**	**3.0**	360.3	**BG90G50-../DSE09LA4**	334	65000	-	4.8	2500	3.7
3.3	**3950**	**2.3**	435.8	"	"	65000	-	4.0	3150	2.9
2.9	**4450**	**2.1**	504.7	"	"	65000	-	3.4	3700	2.5
2.5	**5100**	**1.8**	588.8	"	"	65000	-	3.0	4200	2.2
2.3	**5600**	**1.65**	644.7	"	"	65000	-	2.7	4650	2.0
2.0	**6500**	**1.4**	714.2	"	"	65000	-	2.4	5300	1.75
1.7	**7700**	**1.2**	883.7	"	"	65000	-	2.0	6400	1.45
1.3	**10300**	**0.89**	1174	"	"	65000	-	1.5	8800	1.05
2.5	**5700**	**3.2**	591.1	**BG100Z-../DSE09LA4**	522	90000	-	2.9	4900	3.8
2.2	**6500**	**2.8**	658.1	"	"	90000	-	2.6	5500	3.4
1.9	**7500**	**2.5**	759.0	"	"	90000	-	2.3	6200	3.0
1.7	**8400**	**2.2**	845.1	"	"	90000	-	2.1	6800	2.7
1.5	**7900**	**2.3**	976.1	**BG100G50-../DSE09LA4**	521	90000	-	1.8	6300	2.9
1.4	**8800**	**2.1**	1043	"	"	90000	-	1.7	7000	2.6
1.2	**10300**	**1.8**	1204	"	"	90000	-	1.5	7900	2.3
1.0	**12900**	**1.45**	1444	"	"	90000	-	1.2	10500	1.75
0.85	**15200**	**1.2**	1678	"	"	90000	-	1.1	11400	1.6
0.8	**16100**	**1.15**	1867	"	"	90000	-	0.95	13200	1.4
0.7	**18400**	**1.0**	2154	"	"	90000	-	0.8	15800	1.15

BG-series helical-geared motors

Selection helical-geared motors DSE -IE1

P = 2.2 kW

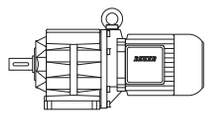

50 Hz			i	Type	m	F_{RN}	F_{RV}	60 Hz		
n_2	M_2	f_B						n_2	M_2	f_B
1/min	Nm				kg	N	N	1/min	Nm	
570	**36.5**	**1.55**	2.52	**BG10-../DSE09XA4**	30	560	790	680	30.5	1.85
420	**50**	**1.25**	3.42	"	"	630	880	500	42	1.5
330	**63**	**1.1**	4.36	"	"	650	910	395	53	1.3
270	**77**	**0.97**	5.34	"	"	620	910	325	64	1.15
210	**100**	**0.81**	6.78	"	"	660	920	255	82	0.99
570	**36.5**	**2.3**	2.52	**BG20-../DSE09XA4**	32	1660	-	680	30.5	2.8
430	**48.5**	**1.9**	3.33	"	"	1830	-	520	40	2.3
325	**64**	**1.65**	4.38	"	"	1990	-	395	53	1.95
260	**80**	**1.45**	5.49	"	"	2100	-	315	66	1.75
220	**95**	**1.3**	6.48	"	"	2250	-	265	79	1.55
178	**118**	**1.15**	8.02	"	"	2500	-	215	97	1.4
172	**122**	**1.0**	8.29	"	"	2250	-	210	100	1.2
160	**131**	**1.1**	8.91	"	"	2600	-	192	109	1.3
148	**141**	**0.87**	9.65	"	"	2250	-	178	118	1.05
135	**155**	**0.99**	10.54	"	"	2700	-	163	128	1.2
122	**172**	**0.92**	11.71	"	"	2800	-	147	142	1.1
108	**194**	**0.86**	13.21	"	"	2900	-	130	161	1.05
97	**215**	**0.8**	14.67	"	"	3050	-	117	179	0.96
540	**38.5**	**3.3**	2.67	**BG30-../DSE09XA4**	37	1450	-	650	32	4.0
420	**50**	**2.8**	3.40	"	"	1580	-	510	41	3.4
340	**61**	**2.8**	4.21	"	"	1630	-	410	51	3.4
265	**79**	**2.5**	5.44	"	"	1670	-	315	66	3.0
215	**97**	**2.2**	6.75	"	"	1760	-	255	82	2.6
180	**116**	**1.85**	7.91	"	"	1760	-	220	95	2.3
166	**126**	**1.95**	8.60	"	"	2800	-	199	105	2.3
149	**141**	**1.8**	9.55	"	"	3000	-	180	116	2.2
134	**156**	**1.7**	10.65	"	"	2950	-	161	130	2.0
121	**173**	**1.6**	11.82	"	"	3200	-	145	144	1.9
104	**200**	**1.45**	13.77	"	"	3150	-	125	168	1.75
93	**225**	**1.35**	15.27	"	"	3450	-	112	187	1.6
84	**250**	**1.2**	17.06	"	"	3700	-	101	205	1.45
76	**275**	**1.1**	18.93	"	"	4100	-	91	230	1.3
72	**290**	**1.05**	19.99	"	"	4200	-	86	240	1.25
65	**320**	**0.94**	22.18	"	"	4600	-	78	265	1.15
56	**375**	**0.8**	25.45	"	"	4850	-	68	305	0.98
230	**91**	**3.2**	6.29	**BG40-../DSE09XA4**	51	2600	-	275	76	3.9
187	**112**	**2.6**	7.62	"	"	2650	-	225	93	3.2
171	**122**	**2.8**	8.31	"	"	4100	-	210	100	3.4
158	**132**	**2.2**	9.00	"	"	2650	-	190	110	2.7
154	**136**	**2.6**	9.23	"	"	4350	-	186	112	3.2
138	**152**	**2.5**	10.35	"	"	4350	-	166	126	3.0
124	**169**	**2.3**	11.49	"	"	4600	-	149	141	2.8
111	**189**	**2.2**	12.86	"	"	4500	-	133	157	2.6
100	**210**	**2.0**	14.28	"	"	4900	-	120	175	2.4
87	**240**	**1.75**	16.39	"	"	5300	-	105	200	2.1
79	**265**	**1.6**	18.19	"	"	5600	-	95	220	1.95
72	**290**	**1.45**	19.84	"	"	5800	-	87	240	1.75
65	**320**	**1.35**	22.02	"	"	6000	-	78	265	1.6
61	**340**	**1.25**	23.43	"	"	6200	-	73	285	1.5
55	**380**	**1.1**	26.01	"	"	6500	-	66	315	1.35
48.5	**430**	**0.99**	29.34	"	"	6800	-	59	355	1.2
44	**475**	**0.89**	32.57	"	"	7000	-	53	395	1.1
42	**500**	**0.85**	34.20	"	"	7000	-	50	420	1.0
118	**178**	**3.2**	12.06	**BG50-../DSE09XA4**	59	5700	-	142	147	3.9
107	**196**	**3.0**	13.36	"	"	6100	-	128	164	3.6
86	**240**	**2.6**	16.53	"	"	6500	-	104	200	3.2
78	**265**	**2.4**	18.33	"	"	7200	-	94	220	2.9
65	**320**	**1.95**	21.96	"	"	8000	-	78	265	2.4
59	**355**	**1.75**	24.34	"	"	8700	-	71	295	2.1
48	**435**	**1.45**	29.62	"	"	8000	-	58	360	1.75
43.5	**480**	**1.3**	32.84	"	"	8700	-	53	395	1.6
37.5	**560**	**1.15**	37.89	"	"	10000	-	45.5	460	1.35

P = 2.2 kW

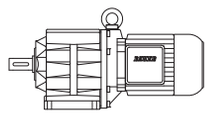

50 Hz			i	Type	m	F_{RN}	F_{RV}	60 Hz		
n_2	M_2	f_B						n_2	M_2	f_B
1/min	Nm				kg	N	N	1/min	Nm	
34	**610**	**1.05**	42.00	**BG50-../DSE09XA4**	"	10000	-	41	510	1.25
30.5	**680**	**0.93**	47.02	"	"	10000	-	36.5	570	1.1
27.5	**760**	**0.83**	52.12	"	"	10000	-	33	630	1.0
58	**360**	**3.3**	24.82	**BG60-../DSE09XA4**	90	13800	-	69	300	4.0
48.5	**430**	**2.8**	29.31	"	"	14800	-	59	355	3.4
44	**475**	**2.5**	32.48	"	"	15400	-	53	395	3.0
37	**560**	**2.1**	38.85	"	"	16000	-	44.5	470	2.6
33	**630**	**1.9**	43.05	"	"	16000	-	40	520	2.3
28.5	**730**	**1.65**	50.31	"	"	16000	-	34	610	1.95
25.5	**820**	**1.45**	55.76	"	"	16000	-	31	670	1.8
23.5	**890**	**1.35**	60.90	"	"	16000	-	28.5	730	1.65
21.5	**970**	**1.25**	67.49	"	"	16000	-	25.5	820	1.45
21	**1000**	**1.2**	68.32	**BG60Z-../DSE09XA4**	109	16000	-	25.5	820	1.45
19	**1100**	**1.1**	75.71	"	"	16000	-	23	910	1.3
16	**1310**	**0.92**	91.09	"	"	16000	-	19	1100	1.1
14.5	**1440**	**0.83**	101.0	"	"	16000	-	17	1230	0.98
28.5	**730**	**3.2**	50.40	**BG70-../DSE09XA4**	128	20000	-	34	610	3.8
24	**870**	**2.6**	59.82	"	"	20000	-	29	720	3.2
22	**950**	**2.4**	64.85	**BG70Z-../DSE09XA4**	149	20000	-	26.5	790	2.9
19.5	**1070**	**2.1**	73.82	"	"	20000	-	23.5	890	2.6
16.5	**1270**	**1.8**	87.61	"	"	20000	-	20	1050	2.2
15	**1400**	**1.65**	95.74	"	"	20000	-	18	1160	2.0
12.5	**1680**	**1.35**	113.6	"	"	20000	-	15.5	1350	1.7
11.5	**1820**	**1.25**	124.0	"	"	20000	-	14	1500	1.55
9.7	**2150**	**1.05**	147.2	"	"	20000	-	12	1750	1.3
8.7	**2400**	**0.96**	163.8	"	"	20000	-	10.5	2000	1.15
7.4	**2800**	**0.82**	194.4	"	"	20000	-	8.8	2350	0.98
15.5	**1350**	**3.1**	93.89	**BG80Z-../DSE09XA4**	217	26000	-	18.5	1130	3.7
13	**1610**	**2.6**	112.4	"	"	26000	-	15.5	1350	3.1
11.5	**1820**	**2.3**	124.8	"	"	26000	-	14	1500	2.8
9.8	**2100**	**2.0**	145.4	"	"	26000	-	12	1750	2.4
8.8	**2350**	**1.8**	161.5	"	"	26000	-	11	1910	2.2
7.7	**2700**	**1.55**	186.8	"	"	26000	-	9.2	2250	1.85
6.9	**3000**	**1.4**	207.4	"	"	26000	-	8.3	2500	1.7
6.3	**3050**	**1.5**	227.2	**BG80G40-../DSE09XA4**	228	26000	-	7.6	2450	1.9
5.7	**3350**	**1.35**	252.3	"	"	26000	-	6.8	2750	1.65
5.1	**3800**	**1.2**	282.8	"	"	26000	-	6.1	3100	1.5
4.6	**4200**	**1.1**	314.0	"	"	26000	-	5.5	3450	1.35
4.0	**4900**	**0.94**	360.0	"	"	26000	-	4.8	4000	1.15
3.6	**5400**	**0.85**	399.8	"	"	26000	-	4.3	4500	1.0
8.0	**2600**	**3.2**	178.5	**BG90Z-../DSE09XA4**	327	65000	-	9.6	2150	3.9
6.9	**3000**	**2.8**	208.3	"	"	65000	-	8.3	2500	3.4
6.3	**3300**	**2.5**	228.1	"	"	65000	-	7.5	2800	3.0
5.5	**3350**	**2.7**	262.5	**BG90G50-../DSE09XA4**	338	65000	-	6.6	2750	3.3
4.8	**4050**	**2.3**	298.8	"	"	65000	-	5.8	3300	2.8
4.0	**4750**	**1.95**	360.3	"	"	65000	-	4.8	3850	2.4
3.3	**5900**	**1.55**	435.8	"	"	65000	-	4.0	4850	1.9
2.9	**6700**	**1.35**	504.7	"	"	65000	-	3.4	5600	1.65
2.5	**7800**	**1.2**	588.8	"	"	65000	-	3.0	6400	1.45
2.3	**8500**	**1.1**	644.7	"	"	65000	-	2.7	7100	1.3
2.0	**9800**	**0.94**	714.2	"	"	65000	-	2.4	8100	1.15
3.2	**6500**	**2.8**	456.7	**BG100Z-../DSE09XA4**	526	90000	-	3.8	5500	3.4
2.8	**7500**	**2.5**	508.5	"	"	90000	-	3.4	6100	3.0
2.5	**8400**	**2.2**	591.1	"	"	90000	-	2.9	7200	2.6
2.2	**9500**	**1.95**	658.1	"	"	90000	-	2.6	8000	2.3
1.9	**11000**	**1.7**	759.0	"	"	90000	-	2.3	9100	2.0
1.7	**12300**	**1.5**	845.1	"	"	90000	-	2.1	10000	1.85
1.5	**12400**	**1.5**	976.1	**BG100G50-../DSE09XA4**	525	90000	-	1.8	10000	1.85
1.4	**13600**	**1.35**	1043	"	"	90000	-	1.7	10900	1.7
1.2	**15800**	**1.15**	1204	"	"	90000	-	1.5	12300	1.5
1.0	**19600**	**0.94**	1444	"	"	90000	-	1.2	16100	1.15

BG-series helical-geared motors

Selection helical-geared motors DSE -IE1

P = 3 kW

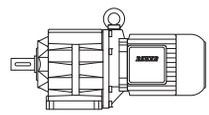

50 Hz			i	Type	m	F_{RN}	F_{RV}	60 Hz		
n_2	M_2	f_B						n_2	M_2	f_B
1/min	Nm				kg	N	N	1/min	Nm	
540	**53**	**2.4**	2.67	**BG30-../DSE11SA4**	40	1450	-	650	44	2.9
420	**68**	**2.0**	3.40	"	"	1580	-	510	56	2.5
340	**84**	**2.0**	4.21	"	"	1630	-	410	69	2.5
265	**108**	**1.85**	5.44	"	"	1670	-	315	90	2.2
215	**133**	**1.65**	6.75	"	"	1760	-	255	112	1.95
180	**159**	**1.35**	7.91	"	"	1760	-	220	130	1.65
166	**172**	**1.45**	8.60	"	"	2800	-	199	143	1.7
149	**192**	**1.3**	9.55	"	"	3000	-	180	159	1.6
134	**210**	**1.25**	10.65	"	"	2950	-	161	177	1.5
121	**235**	**1.15**	11.82	"	"	3200	-	145	197	1.4
104	**275**	**1.05**	13.77	"	"	3150	-	125	225	1.3
93	**305**	**0.98**	15.27	"	"	3450	-	112	255	1.2
84	**340**	**0.88**	17.06	"	"	3700	-	101	280	1.05
76	**375**	**0.8**	18.93	"	"	4100	-	91	310	0.97
360	**79**	**3.1**	3.97	**BG40-../DSE11SA4**	59	2400	-	435	65	3.8
290	**98**	**2.7**	4.94	"	"	2450	-	350	81	3.3
230	**124**	**2.4**	6.29	"	"	2600	-	275	104	2.8
187	**153**	**1.95**	7.62	"	"	2650	-	225	127	2.3
171	**167**	**2.1**	8.31	"	"	4100	-	210	136	2.5
158	**181**	**1.65**	9.00	"	"	2650	-	190	150	1.95
154	**186**	**1.9**	9.23	"	"	4350	-	186	154	2.3
138	**205**	**1.85**	10.35	"	"	4350	-	166	172	2.2
124	**230**	**1.7**	11.49	"	"	4600	-	149	192	2.0
111	**255**	**1.6**	12.86	"	"	4500	-	133	215	1.9
100	**285**	**1.5**	14.28	"	"	4900	-	120	235	1.8
87	**325**	**1.3**	16.39	"	"	5300	-	105	270	1.55
79	**360**	**1.2**	18.19	"	"	5600	-	95	300	1.4
72	**395**	**1.1**	19.84	"	"	5800	-	87	325	1.3
65	**440**	**0.97**	22.02	"	"	6000	-	78	365	1.15
61	**465**	**0.91**	23.43	"	"	6200	-	73	390	1.1
55	**520**	**0.82**	26.01	"	"	6500	-	66	430	0.99
164	**174**	**2.9**	8.70	**BG50-../DSE11SA4**	69	5300	-	197	145	3.5
148	**193**	**2.7**	9.65	"	"	5600	-	178	160	3.3
118	**240**	**2.4**	12.06	"	"	5700	-	142	200	2.9
107	**265**	**2.2**	13.36	"	"	6100	-	128	220	2.7
86	**330**	**1.9**	16.53	"	"	6500	-	104	275	2.3
78	**365**	**1.75**	18.33	"	"	7200	-	94	300	2.1
65	**440**	**1.45**	21.96	"	"	8000	-	78	365	1.75
59	**485**	**1.3**	24.34	"	"	8700	-	71	400	1.6
48	**590**	**1.05**	29.62	"	"	8000	-	58	490	1.3
43.5	**650**	**0.97**	32.84	"	"	8700	-	53	540	1.15
37.5	**760**	**0.83**	37.89	"	"	10000	-	45.5	620	1.0
85	**335**	**3.3**	16.80	**BG60-../DSE11SA4**	101	12000	-	102	280	4.0
77	**370**	**3.1**	18.62	"	"	12400	-	92	310	3.7
64	**445**	**2.7**	22.40	"	"	13300	-	77	370	3.2
58	**490**	**2.4**	24.82	"	"	13800	-	69	415	2.9
48.5	**590**	**2.0**	29.31	"	"	14800	-	59	485	2.5
44	**650**	**1.85**	32.48	"	"	15400	-	53	540	2.2
37	**770**	**1.55**	38.85	"	"	16000	-	44.5	640	1.9
33	**860**	**1.4**	43.05	"	"	16000	-	40	710	1.7
28.5	**1000**	**1.2**	50.31	"	"	16000	-	34	840	1.45
25.5	**1120**	**1.05**	55.76	"	"	16000	-	31	920	1.3
23.5	**1210**	**0.99**	60.90	"	"	16000	-	28.5	1000	1.2
21.5	**1330**	**0.9**	67.49	"	"	16000	-	25.5	1120	1.05
21	**1360**	**0.88**	68.32	**BG60Z-../DSE11SA4**	117	16000	-	25.5	1120	1.05
19	**1500**	**0.8**	75.71	"	"	16000	-	23	1240	0.97
40.5	**700**	**3.3**	35.24	**BG70-../DSE11SA4**	132	18300	-	49	580	4.0
36.5	**780**	**2.9**	39.22	"	"	19100	-	44	650	3.5
31	**920**	**2.5**	46.54	"	"	20000	-	37	770	3.0
28.5	**1000**	**2.3**	50.40	"	"	20000	-	34	840	2.7
24	**1190**	**1.95**	59.82	"	"	20000	-	29	980	2.3

P = 3 kW

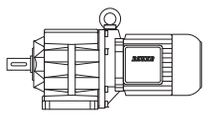

50 Hz			i	Type	m	F_{RN}	F_{RV}	60 Hz		
n_2	M_2	f_B						n_2	M_2	f_B
1/min	Nm				kg	N	N	1/min	Nm	
22	**1300**	**1.75**	64.85	**BG70Z-../DSE11SA4**	158	20000	-	26.5	1080	2.1
19.5	**1460**	**1.6**	73.82	"	"	20000	-	23.5	1210	1.9
16.5	**1730**	**1.35**	87.61	"	"	20000	-	20	1430	1.6
15	**1910**	**1.2**	95.74	"	"	20000	-	18	1590	1.45
12.5	**2250**	**1.0**	113.6	"	"	20000	-	15.5	1840	1.25
11.5	**2450**	**0.94**	124.0	"	"	20000	-	14	2000	1.15
22.5	**1270**	**3.3**	63.56	**BG80-../DSE11SA4**	186	26000	-	27	1060	4.0
21.5	**1330**	**3.2**	66.40	**BG80Z-../DSE11SA4**	228	26000	-	26	1100	3.8
19.5	**1460**	**2.9**	73.73	"	"	26000	-	23.5	1210	3.5
17	**1680**	**2.5**	84.55	"	"	26000	-	20.5	1390	3.0
15.5	**1840**	**2.3**	93.89	"	"	26000	-	18.5	1540	2.7
13	**2200**	**1.9**	112.4	"	"	26000	-	15.5	1840	2.3
11.5	**2450**	**1.7**	124.8	"	"	26000	-	14	2000	2.1
9.8	**2900**	**1.45**	145.4	"	"	26000	-	12	2350	1.8
8.8	**3250**	**1.3**	161.5	"	"	26000	-	11	2600	1.6
7.7	**3700**	**1.15**	186.8	"	"	26000	-	9.2	3100	1.35
6.9	**4150**	**1.0**	207.4	"	"	26000	-	8.3	3450	1.2
6.3	**4250**	**1.1**	227.2	**BG80G40-../DSE11SA4**	236	26000	-	7.6	3450	1.35
5.7	**4700**	**0.98**	252.3	"	"	26000	-	6.8	3900	1.2
5.1	**5300**	**0.87**	282.8	"	"	26000	-	6.1	4350	1.05
10.5	**2700**	**3.1**	139.2	**BG90Z-../DSE11SA4**	330	65000	-	12.5	2250	3.7
8.8	**3250**	**2.6**	163.0	"	"	65000	-	10.5	2700	3.1
8.0	**3550**	**2.4**	178.5	"	"	65000	-	9.6	2950	2.8
6.9	**4150**	**2.0**	208.3	"	"	65000	-	8.3	3450	2.4
6.3	**4500**	**1.85**	228.1	"	"	65000	-	7.5	3800	2.2
5.5	**4750**	**1.95**	262.5	**BG90G50-../DSE11SA4**	347	65000	-	6.6	3900	2.4
4.8	**5600**	**1.65**	298.8	"	"	65000	-	5.8	4650	2.0
4.0	**6600**	**1.4**	360.3	"	"	65000	-	4.8	5400	1.7
3.3	**8200**	**1.1**	435.8	"	"	65000	-	4.0	6700	1.35
2.9	**9300**	**0.99**	504.7	"	"	65000	-	3.4	7900	1.15
2.5	**10800**	**0.85**	588.8	"	"	65000	-	3.0	8900	1.05
5.5	**5200**	**3.2**	259.0	**BG100-../DSE11SA4**	447	90000	-	6.7	4250	4.0
4.8	**5900**	**3.1**	300.4	**BG100Z-../DSE11SA4**	537	90000	-	5.7	5000	3.7
4.2	**6800**	**2.7**	343.6	"	"	90000	-	5.0	5700	3.2
3.8	**7500**	**2.5**	382.6	"	"	90000	-	4.5	6300	2.9
3.2	**8900**	**2.1**	456.7	"	"	90000	-	3.8	7500	2.5
2.8	**10200**	**1.8**	508.5	"	"	90000	-	3.4	8400	2.2
2.5	**11400**	**1.6**	591.1	"	"	90000	-	2.9	9800	1.9
2.2	**13000**	**1.4**	658.1	"	"	90000	-	2.6	11000	1.7
1.9	**15000**	**1.25**	759.0	"	"	90000	-	2.3	12400	1.5
1.7	**16800**	**1.1**	845.1	"	"	90000	-	2.1	13600	1.35
1.5	**17500**	**1.05**	976.1	**BG100G50-../DSE11SA4**	534	90000	-	1.8	14300	1.3
1.4	**19000**	**0.97**	1043	"	"	90000	-	1.7	15400	1.2
1.2	**22200**	**0.83**	1204	"	"	90000	-	1.5	17400	1.05

P = 4 kW

50 Hz			i	Type	m	F_{RN}	F_{RV}	60 Hz		
n_2	M_2	f_B						n_2	M_2	f_B
1/min	Nm				kg	N	N	1/min	Nm	
540	**70**	**1.85**	2.67	**BG30-../DSE11MA4**	46	1450	-	650	58	2.2
420	**90**	**1.55**	3.40	"	"	1580	-	510	74	1.9
340	**112**	**1.55**	4.21	"	"	1630	-	410	93	1.85
265	**144**	**1.4**	5.44	"	"	1670	-	315	121	1.65
215	**177**	**1.25**	6.75	"	"	1760	-	255	149	1.45
180	**210**	**1.05**	7.91	"	"	1760	-	220	173	1.25
166	**230**	**1.05**	8.60	"	"	2800	-	199	191	1.3
149	**255**	**1.0**	9.55	"	"	3000	-	180	210	1.2
134	**285**	**0.93**	10.65	"	"	2950	-	161	235	1.15
121	**315**	**0.87**	11.82	"	"	3200	-	145	260	1.05
104	**365**	**0.81**	13.77	"	"	3150	-	125	305	0.96

BG-series helical-geared motors

Selection helical-geared motors DSE -IE1

P = 4 kW

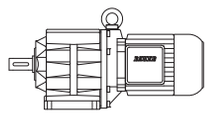

50 Hz			i	Type	m	F_{RN}	F_{RV}	60 Hz		
n_2	M_2	f_B						n_2	M_2	f_B
1/min	Nm				kg	N	N	1/min	Nm	
580	**65**	**3.1**	2.46	**BG40-../DSE11MA4**	65	2150	-	700	54	3.7
450	**84**	**2.7**	3.19	"	"	2350	-	540	70	3.2
360	**106**	**2.3**	3.97	"	"	2400	-	435	87	2.8
290	**131**	**2.0**	4.94	"	"	2450	-	350	109	2.5
230	**166**	**1.8**	6.29	"	"	2600	-	275	138	2.1
187	**200**	**1.5**	7.62	"	"	2650	-	225	169	1.75
171	**220**	**1.55**	8.31	"	"	4100	-	210	181	1.9
158	**240**	**1.25**	9.00	"	"	2650	-	190	200	1.5
154	**245**	**1.45**	9.23	"	"	4350	-	186	205	1.75
138	**275**	**1.35**	10.35	"	"	4350	-	166	230	1.65
124	**305**	**1.3**	11.49	"	"	4600	-	149	255	1.55
111	**340**	**1.2**	12.86	"	"	4500	-	133	285	1.45
100	**380**	**1.1**	14.28	"	"	4900	-	120	315	1.35
87	**435**	**0.98**	16.39	"	"	5300	-	105	360	1.2
79	**480**	**0.89**	18.19	"	"	5600	-	95	400	1.05
72	**530**	**0.8**	19.84	"	"	5800	-	87	435	0.98
290	**131**	**3.0**	4.91	**BG50-../DSE11MA4**	75	3500	-	350	109	3.7
215	**177**	**2.6**	6.74	"	"	3750	-	255	149	3.0
164	**230**	**2.2**	8.70	"	"	5300	-	197	193	2.6
148	**255**	**2.1**	9.65	"	"	5600	-	178	210	2.5
118	**320**	**1.8**	12.06	"	"	5700	-	142	265	2.2
107	**355**	**1.65**	13.36	"	"	6100	-	128	295	2.0
86	**440**	**1.45**	16.53	"	"	6500	-	104	365	1.75
78	**485**	**1.3**	18.33	"	"	7200	-	94	405	1.55
65	**580**	**1.1**	21.96	"	"	8000	-	78	485	1.3
59	**640**	**0.98**	24.34	"	"	8700	-	71	530	1.2
48	**790**	**0.8**	29.62	"	"	8000	-	58	650	0.97
117	**325**	**3.0**	12.16	**BG60-../DSE11MA4**	107	10800	-	141	270	3.7
106	**360**	**2.8**	13.47	"	"	11200	-	127	300	3.4
85	**445**	**2.5**	16.80	"	"	12000	-	102	370	3.0
77	**495**	**2.3**	18.62	"	"	12400	-	92	415	2.8
64	**590**	**2.0**	22.40	"	"	13300	-	77	495	2.4
58	**650**	**1.85**	24.82	"	"	13800	-	69	550	2.2
48.5	**780**	**1.55**	29.31	"	"	14800	-	59	640	1.9
44	**860**	**1.4**	32.48	"	"	15400	-	53	720	1.65
37	**1030**	**1.15**	38.85	"	"	16000	-	44.5	850	1.4
33	**1150**	**1.05**	43.05	"	"	16000	-	40	950	1.25
28.5	**1340**	**0.9**	50.31	"	"	16000	-	34	1120	1.05
25.5	**1490**	**0.81**	55.76	"	"	16000	-	31	1230	0.98
53	**720**	**3.2**	27.21	**BG70-../DSE11MA4**	138	16400	-	63	600	3.8
48	**790**	**2.9**	29.69	"	"	16900	-	58	650	3.5
40.5	**940**	**2.4**	35.24	"	"	18300	-	49	770	3.0
36.5	**1040**	**2.2**	39.22	"	"	19100	-	44	860	2.7
31	**1230**	**1.85**	46.54	"	"	20000	-	37	1030	2.2
28.5	**1340**	**1.7**	50.40	"	"	20000	-	34	1120	2.1
24	**1590**	**1.45**	59.82	"	"	20000	-	29	1310	1.75
22	**1730**	**1.35**	64.85	**BG70Z-../DSE11MA4**	164	20000	-	26.5	1440	1.6
19.5	**1950**	**1.2**	73.82	"	"	20000	-	23.5	1620	1.4
16.5	**2300**	**1.0**	87.61	"	"	20000	-	20	1910	1.2
15	**2500**	**0.92**	95.74	"	"	20000	-	18	2100	1.1
29.5	**1290**	**3.3**	48.80	**BG80-../DSE11MA4**	192	23800	-	35.5	1070	3.9
25	**1520**	**2.8**	57.24	"	"	25400	-	30	1270	3.3
22.5	**1690**	**2.5**	63.56	"	"	26000	-	27	1410	3.0
21.5	**1770**	**2.4**	66.40	**BG80Z-../DSE11MA4**	234	26000	-	26	1460	2.9
19.5	**1950**	**2.2**	73.73	"	"	26000	-	23.5	1620	2.6
17	**2200**	**1.9**	84.55	"	"	26000	-	20.5	1860	2.3
15.5	**2450**	**1.7**	93.89	"	"	26000	-	18.5	2050	2.0
13	**2900**	**1.45**	112.4	"	"	26000	-	15.5	2450	1.7
11.5	**3300**	**1.25**	124.8	"	"	26000	-	14	2700	1.55
9.8	**3850**	**1.1**	145.4	"	"	26000	-	12	3150	1.35
8.8	**4300**	**0.98**	161.5	"	"	26000	-	11	3450	1.2

P = 4 kW

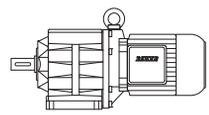

50 Hz			i	Type	m	F_{RN}	F_{RV}	60 Hz		
n_2	M_2	f_B						n_2	M_2	f_B
1/min	Nm				kg	N	N	1/min	Nm	
7.7	**4950**	**0.85**	186.8	**BG80Z-../DSE11MA4**	"	26000	-	9.2	4150	1.0
6.3	**5700**	**0.81**	227.2	**BG80G40-../DSE11MA4**	242	26000	-	7.6	4700	0.98
13.5	**2800**	**3.0**	105.7	**BG90Z-../DSE11MA4**	336	65000	-	16.5	2300	3.7
11.5	**3300**	**2.5**	127.1	"	"	65000	-	13.5	2800	3.0
10.5	**3600**	**2.3**	139.2	"	"	65000	-	12.5	3050	2.8
8.8	**4300**	**1.95**	163.0	"	"	65000	-	10.5	3600	2.3
8.0	**4750**	**1.75**	178.5	"	"	65000	-	9.6	3950	2.1
6.9	**5500**	**1.55**	208.3	"	"	65000	-	8.3	4600	1.85
6.3	**6000**	**1.4**	228.1	"	"	65000	-	7.5	5000	1.7
5.5	**6500**	**1.4**	262.5	**BG90G50-../DSE11MA4**	353	65000	-	6.6	5300	1.75
4.8	**7600**	**1.2**	298.8	"	"	65000	-	5.8	6300	1.45
4.0	**9000**	**1.0**	360.3	"	"	65000	-	4.8	7400	1.25
3.3	**11100**	**0.83**	435.8	"	"	65000	-	4.0	9100	1.0
7.2	**5300**	**3.2**	198.8	**BG100-../DSE11MA4**	453	90000	-	8.7	4350	3.9
6.2	**6100**	**2.8**	232.6	"	"	90000	-	7.4	5100	3.3
5.5	**6900**	**2.4**	259.0	"	"	90000	-	6.7	5700	2.9
5.3	**7200**	**2.6**	269.8	**BG100Z-../DSE11MA4**	543	90000	-	6.4	5900	3.1
4.8	**7900**	**2.3**	300.4	"	"	90000	-	5.7	6700	2.8
4.2	**9000**	**2.1**	343.6	"	"	90000	-	5.0	7600	2.4
3.8	**10000**	**1.85**	382.6	"	"	90000	-	4.5	8400	2.2
3.2	**11900**	**1.55**	456.7	"	"	90000	-	3.8	10000	1.85
2.8	**13600**	**1.35**	508.5	"	"	90000	-	3.4	11200	1.65
2.5	**15200**	**1.2**	591.1	"	"	90000	-	2.9	13100	1.4
2.2	**17300**	**1.05**	658.1	"	"	90000	-	2.6	14600	1.25
1.9	**20100**	**0.92**	759.0	"	"	90000	-	2.3	16600	1.1
1.7	**22400**	**0.83**	845.1	"	"	90000	-	2.1	18100	1.0

P = 5.5 kW

50 Hz			i	Type	m	F_{RN}	F_{RV}	60 Hz		
n_2	M_2	f_B						n_2	M_2	f_B
1/min	Nm				kg	N	N	1/min	Nm	
540	**97**	**1.3**	2.67	**BG30-../DSE11LA4**	58	1450	-	650	80	1.6
420	**125**	**1.1**	3.40	"	"	1580	-	510	102	1.35
340	**154**	**1.1**	4.21	"	"	1630	-	410	128	1.35
265	**198**	**1.0**	5.44	"	"	1670	-	315	166	1.2
215	**240**	**0.9**	6.75	"	"	1760	-	255	205	1.05
580	**90**	**2.2**	2.46	**BG40-../DSE11LA4**	77	2150	-	700	75	2.7
450	**116**	**1.95**	3.19	"	"	2350	-	540	97	2.3
360	**145**	**1.7**	3.97	"	"	2400	-	435	120	2.0
290	**181**	**1.5**	4.94	"	"	2450	-	350	150	1.8
230	**225**	**1.3**	6.29	"	"	2600	-	275	191	1.55
187	**280**	**1.05**	7.62	"	"	2650	-	225	230	1.3
171	**305**	**1.15**	8.31	"	"	4100	-	210	250	1.4
158	**330**	**0.89**	9.00	"	"	2650	-	190	275	1.05
154	**340**	**1.05**	9.23	"	"	4350	-	186	280	1.3
138	**380**	**0.99**	10.35	"	"	4350	-	166	315	1.2
124	**420**	**0.93**	11.49	"	"	4600	-	149	350	1.1
111	**470**	**0.87**	12.86	"	"	4500	-	133	390	1.05
100	**520**	**0.81**	14.28	"	"	4900	-	120	435	0.97
400	**131**	**2.6**	3.55	**BG50-../DSE11LA4**	86	3300	-	485	108	3.2
290	**181**	**2.2**	4.91	"	"	3500	-	350	150	2.7
215	**240**	**1.9**	6.74	"	"	3750	-	255	205	2.2
164	**320**	**1.6**	8.70	"	"	5300	-	197	265	1.9
148	**350**	**1.5**	9.65	"	"	5600	-	178	295	1.8
118	**445**	**1.3**	12.06	"	"	5700	-	142	365	1.6
107	**490**	**1.2**	13.36	"	"	6100	-	128	410	1.45
86	**610**	**1.05**	16.53	"	"	6500	-	104	500	1.25
78	**670**	**0.94**	18.33	"	"	7200	-	94	550	1.15

BG-series helical-geared motors

Selection helical-geared motors DSE -IE1

P = 5.5 kW

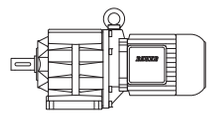

50 Hz			i	Type	m	F_{RN}	F_{RV}	60 Hz		
n_2	M_2	f_B						n_2	M_2	f_B
1/min	Nm				kg	N	N	1/min	Nm	
210	**250**	**3.1**	6.88	**BG60-../DSE11LA4**	119	8600	-	250	210	3.7
156	**335**	**2.7**	9.13	"	"	9800	-	188	275	3.2
141	**370**	**2.5**	10.12	"	"	10200	-	169	310	2.9
117	**445**	**2.2**	12.16	"	"	10800	-	141	370	2.7
106	**495**	**2.1**	13.47	"	"	11200	-	127	410	2.5
85	**610**	**1.8**	16.80	"	"	12000	-	102	510	2.2
77	**680**	**1.7**	18.62	"	"	12400	-	92	570	2.0
64	**820**	**1.45**	22.40	"	"	13300	-	77	680	1.75
58	**900**	**1.35**	24.82	"	"	13800	-	69	760	1.6
48.5	**1080**	**1.1**	29.31	"	"	14800	-	59	890	1.35
44	**1190**	**1.0**	32.48	"	"	15400	-	53	990	1.2
37	**1410**	**0.85**	38.85	"	"	16000	-	44.5	1180	1.0
68	**770**	**3.0**	20.98	**BG70-../DSE11LA4**	149	14600	-	82	640	3.6
62	**840**	**2.7**	22.92	"	"	15100	-	75	700	3.3
53	**990**	**2.3**	27.21	"	"	16400	-	63	830	2.8
48	**1090**	**2.1**	29.69	"	"	16900	-	58	900	2.6
40.5	**1290**	**1.8**	35.24	"	"	18300	-	49	1070	2.1
36.5	**1430**	**1.6**	39.22	"	"	19100	-	44	1190	1.95
31	**1690**	**1.35**	46.54	"	"	20000	-	37	1410	1.65
28.5	**1840**	**1.25**	50.40	"	"	20000	-	34	1540	1.5
24	**2150**	**1.05**	59.82	"	"	20000	-	29	1810	1.25
22	**2350**	**0.98**	64.85	**BG70Z-../DSE11LA4**	176	20000	-	26.5	1980	1.15
19.5	**2650**	**0.87**	73.82	"	"	20000	-	23.5	2200	1.05
41.5	**1260**	**3.3**	34.22	**BG80-../DSE11LA4**	204	20200	-	50	1050	4.0
37.5	**1400**	**3.0**	38.00	"	"	21300	-	45	1160	3.6
32.5	**1610**	**2.6**	43.94	"	"	22600	-	39	1340	3.1
29.5	**1780**	**2.4**	48.80	"	"	23800	-	35.5	1470	2.9
25	**2100**	**2.0**	57.24	"	"	25400	-	30	1750	2.4
22.5	**2300**	**1.85**	63.56	"	"	26000	-	27	1940	2.2
21.5	**2400**	**1.75**	66.40	**BG80Z-../DSE11LA4**	246	26000	-	26	2000	2.1
19.5	**2650**	**1.6**	73.73	"	"	26000	-	23.5	2200	1.9
17	**3050**	**1.4**	84.55	"	"	26000	-	20.5	2550	1.65
15.5	**3350**	**1.25**	93.89	"	"	26000	-	18.5	2800	1.5
13	**4000**	**1.05**	112.4	"	"	26000	-	15.5	3350	1.25
11.5	**4550**	**0.92**	124.8	"	"	26000	-	14	3750	1.1
25	**2100**	**3.2**	57.04	**BG90Z-../DSE11LA4**	348	65000	-	30	1750	3.9
23	**2250**	**3.3**	62.47	"	"	65000	-	27.5	1910	3.9
19	**2750**	**3.1**	76.61	"	"	65000	-	22.5	2300	3.7
17	**3050**	**2.8**	83.91	"	"	65000	-	20.5	2550	3.3
15	**3500**	**2.4**	96.53	"	"	65000	-	18	2900	2.9
13.5	**3850**	**2.2**	105.7	"	"	65000	-	16.5	3150	2.7
11.5	**4550**	**1.85**	127.1	"	"	65000	-	13.5	3850	2.2
10.5	**5000**	**1.7**	139.2	"	"	65000	-	12.5	4200	2.0
8.8	**5900**	**1.4**	163.0	"	"	65000	-	10.5	5000	1.7
8.0	**6500**	**1.3**	178.5	"	"	65000	-	9.6	5400	1.55
6.9	**7600**	**1.1**	208.3	"	"	65000	-	8.3	6300	1.35
6.3	**8300**	**1.0**	228.1	"	"	65000	-	7.5	7000	1.2
5.5	**9100**	**1.0**	262.5	**BG90G50-../DSE11LA4**	365	65000	-	6.6	7500	1.25
4.8	**10600**	**0.87**	298.8	"	"	65000	-	5.8	8700	1.05
9.2	**5700**	**2.9**	154.8	**BG100-../DSE11LA4**	465	90000	-	11.5	4550	3.7
8.0	**6500**	**2.6**	178.6	"	"	90000	-	9.6	5400	3.1
7.2	**7200**	**2.3**	198.8	"	"	90000	-	8.7	6000	2.8
6.2	**8400**	**2.0**	232.6	"	"	90000	-	7.4	7000	2.4
5.5	**9500**	**1.75**	259.0	"	"	90000	-	6.7	7800	2.2
5.3	**9900**	**1.85**	269.8	**BG100Z-../DSE11LA4**	555	90000	-	6.4	8200	2.3
4.8	**10900**	**1.7**	300.4	"	"	90000	-	5.7	9200	2.0
4.2	**12500**	**1.5**	343.6	"	"	90000	-	5.0	10500	1.75
3.8	**13800**	**1.35**	382.6	"	"	90000	-	4.5	11600	1.6
3.2	**16400**	**1.15**	456.7	"	"	90000	-	3.8	13800	1.35
2.8	**18700**	**0.99**	508.5	"	"	90000	-	3.4	15400	1.2
2.5	**21000**	**0.88**	591.1	"	"	90000	-	2.9	18100	1.0

P = 7.5 kW

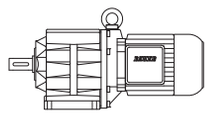

50 Hz			i	Type	m	F_{RN}	F_{RV}	60 Hz		
n_2	M_2	f_B						n_2	M_2	f_B
1/min	Nm				kg	N	N	1/min	Nm	
590	**121**	**2.5**	2.47	**BG50-../DSE13MA4**	98	2900	-	710	100	3.1
410	**174**	**2.0**	3.55	"	"	3300	-	495	144	2.4
295	**240**	**1.65**	4.91	"	"	3500	-	355	200	2.0
215	**330**	**1.35**	6.74	"	"	3750	-	260	275	1.65
166	**430**	**1.2**	8.70	"	"	5300	-	200	355	1.45
150	**475**	**1.1**	9.65	"	"	5600	-	181	395	1.35
120	**590**	**0.98**	12.06	"	"	5700	-	145	490	1.2
108	**660**	**0.9**	13.36	"	"	6100	-	131	540	1.1
390	**183**	**3.3**	3.74	**BG60-../DSE13MA4**	132	7100	-	470	152	4.0
290	**245**	**2.8**	4.98	"	"	7800	-	350	200	3.4
210	**340**	**2.3**	6.88	"	"	8600	-	255	280	2.8
158	**450**	**1.95**	9.13	"	"	9800	-	191	375	2.4
143	**500**	**1.8**	10.12	"	"	10200	-	172	415	2.2
119	**600**	**1.65**	12.16	"	"	10800	-	144	495	2.0
107	**660**	**1.55**	13.47	"	"	11200	-	130	550	1.85
86	**830**	**1.35**	16.80	"	"	12000	-	104	680	1.65
78	**910**	**1.25**	18.62	"	"	12400	-	94	760	1.5
65	**1100**	**1.1**	22.40	"	"	13300	-	78	910	1.3
59	**1210**	**0.99**	24.82	"	"	13800	-	71	1000	1.2
49.5	**1440**	**0.83**	29.31	"	"	14800	-	60	1190	1.0
93	**770**	**3.0**	15.53	**BG70-../DSE13MA4**	162	12700	-	113	630	3.7
82	**870**	**2.6**	17.68	"	"	13400	-	99	720	3.2
69	**1030**	**2.2**	20.98	"	"	14600	-	83	860	2.7
63	**1130**	**2.0**	22.92	"	"	15100	-	76	940	2.4
53	**1350**	**1.7**	27.21	"	"	16400	-	64	1110	2.1
49	**1460**	**1.6**	29.69	"	"	16900	-	59	1210	1.9
41	**1740**	**1.3**	35.24	"	"	18300	-	49.5	1440	1.6
37	**1930**	**1.2**	39.22	"	"	19100	-	44.5	1600	1.45
31	**2300**	**1.0**	46.54	"	"	20000	-	37.5	1910	1.2
29	**2450**	**0.94**	50.40	"	"	20000	-	35	2000	1.15
55	**1300**	**3.2**	26.44	**BG80-../DSE13MA4**	216	17900	-	66	1080	3.9
49.5	**1440**	**2.9**	29.36	"	"	18900	-	60	1190	3.5
42.5	**1680**	**2.5**	34.22	"	"	20200	-	51	1400	3.0
38	**1880**	**2.2**	38.00	"	"	21300	-	46	1550	2.7
33	**2150**	**1.95**	43.94	"	"	22600	-	40	1790	2.3
30	**2350**	**1.8**	48.80	"	"	23800	-	36	1980	2.1
25.5	**2800**	**1.5**	57.24	"	"	25400	-	30.5	2300	1.85
23	**3100**	**1.35**	63.56	"	"	26000	-	27.5	2600	1.6
22	**3250**	**1.3**	66.40	**BG80Z-../DSE13MA4**	259	26000	-	26.5	2700	1.55
20	**3550**	**1.2**	73.73	"	"	26000	-	24	2950	1.4
17.5	**4050**	**1.05**	84.55	"	"	26000	-	21	3400	1.25
15.5	**4600**	**0.91**	93.89	"	"	26000	-	19	3750	1.1
27	**2650**	**3.2**	53.46	**BG90-../DSE13MA4**	305	65000	-	33	2150	3.9
25.5	**2800**	**2.4**	57.04	**BG90Z-../DSE13MA4**	361	65000	-	31	2300	3.0
23.5	**3000**	**2.5**	62.47	"	"	65000	-	28	2550	2.9
19	**3750**	**2.2**	76.61	"	"	65000	-	23	3100	2.7
17.5	**4050**	**2.1**	83.91	"	"	65000	-	21	3400	2.5
15	**4750**	**1.75**	96.53	"	"	65000	-	18.5	3850	2.2
14	**5100**	**1.65**	105.7	"	"	65000	-	16.5	4300	1.95
11.5	**6200**	**1.35**	127.1	"	"	65000	-	14	5100	1.65
10.5	**6800**	**1.25**	139.2	"	"	65000	-	12.5	5700	1.45
8.9	**8000**	**1.05**	163.0	"	"	65000	-	11	6500	1.3
8.1	**8800**	**0.95**	178.5	"	"	65000	-	9.8	7300	1.15
7.0	**10200**	**0.82**	208.3	"	"	65000	-	8.4	8500	0.99
6.6	**10500**	**0.88**	219.9	**BG90G50-../DSE13MA4**	377	65000	-	8.0	8600	1.05
13.5	**5300**	**3.2**	107.5	**BG100-../DSE13MA4**	477	90000	-	16.5	4300	3.9
12.5	**5700**	**2.9**	119.7	"	"	90000	-	15	4750	3.5
10.5	**6800**	**2.5**	139.1	"	"	90000	-	13	5500	3.1
9.4	**7600**	**2.2**	154.8	"	"	90000	-	11.5	6200	2.7

BG-series helical-geared motors

Selection helical-geared motors DSE -IE1

P = 7.5 kW

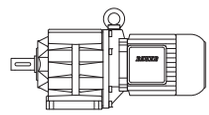

50 Hz			i	Type	m	F_{RN}	F_{RV}	60 Hz		
n_2	M_2	f_B						n_2	M_2	f_B
1/min	Nm				kg	N	N	1/min	Nm	
8.1	**8800**	**1.9**	178.6	**BG100-../DSE13MA4**	"	90000	-	9.8	7300	2.3
7.3	**9800**	**1.7**	198.8	"	"	90000	-	8.8	8100	2.1
6.2	**11500**	**1.45**	232.6	"	"	90000	-	7.5	9500	1.75
5.6	**12700**	**1.3**	259.0	"	"	90000	-	6.8	10500	1.6
5.4	**13200**	**1.4**	269.8	**BG100Z-../DSE13MA4**	568	90000	-	6.5	11000	1.7
4.8	**14900**	**1.25**	300.4	"	"	90000	-	5.8	12300	1.5
4.2	**17000**	**1.1**	343.6	"	"	90000	-	5.1	14000	1.3
3.8	**18800**	**0.98**	382.6	"	"	90000	-	4.6	15500	1.2
3.2	**22300**	**0.83**	456.7	"	"	90000	-	3.9	18300	1.0

P = 9.5 kW

50 Hz			i	Type	m	F_{RN}	F_{RV}	60 Hz		
n_2	M_2	f_B						n_2	M_2	f_B
1/min	Nm				kg	N	N	1/min	Nm	
590	**153**	**2.0**	2.47	**BG50-../DSE13LA4**	101	2900	-	710	127	2.4
410	**220**	**1.6**	3.55	"	"	3300	-	495	183	1.9
295	**305**	**1.3**	4.91	"	"	3500	-	355	255	1.55
215	**420**	**1.1**	6.74	"	"	3750	-	260	345	1.3
166	**540**	**0.94**	8.70	"	"	5300	-	200	450	1.15
150	**600**	**0.87**	9.65	"	"	5600	-	181	500	1.05
390	**230**	**2.7**	3.74	**BG60-../DSE13LA4**	135	7100	-	470	193	3.2
290	**310**	**2.2**	4.98	"	"	7800	-	350	255	2.7
210	**430**	**1.8**	6.88	"	"	8600	-	255	355	2.2
158	**570**	**1.55**	9.13	"	"	9800	-	191	475	1.85
143	**630**	**1.45**	10.12	"	"	10200	-	172	520	1.75
119	**760**	**1.3**	12.16	"	"	10800	-	144	630	1.55
107	**840**	**1.2**	13.47	"	"	11200	-	130	690	1.5
86	**1050**	**1.05**	16.80	"	"	12000	-	104	870	1.25
78	**1160**	**0.99**	18.62	"	"	12400	-	94	960	1.2
65	**1390**	**0.86**	22.40	"	"	13300	-	78	1160	1.05
121	**740**	**3.1**	11.97	**BG70-../DSE13LA4**	165	11200	-	146	620	3.7
111	**810**	**2.8**	13.08	"	"	11600	-	134	670	3.4
93	**970**	**2.4**	15.53	"	"	12700	-	113	800	2.9
82	**1100**	**2.1**	17.68	"	"	13400	-	99	910	2.5
69	**1310**	**1.75**	20.98	"	"	14600	-	83	1090	2.1
63	**1440**	**1.6**	22.92	"	"	15100	-	76	1190	1.95
53	**1710**	**1.35**	27.21	"	"	16400	-	64	1410	1.65
49	**1850**	**1.25**	29.69	"	"	16900	-	59	1530	1.5
41	**2200**	**1.05**	35.24	"	"	18300	-	49.5	1830	1.25
37	**2450**	**0.94**	39.22	"	"	19100	-	44.5	2000	1.15
66	**1370**	**3.1**	22.09	**BG80-../DSE13LA4**	219	16500	-	79	1140	3.7
55	**1640**	**2.6**	26.44	"	"	17900	-	66	1370	3.1
49.5	**1830**	**2.3**	29.36	"	"	18900	-	60	1510	2.8
42.5	**2100**	**2.0**	34.22	"	"	20200	-	51	1770	2.4
38	**2350**	**1.8**	38.00	"	"	21300	-	46	1970	2.1
33	**2700**	**1.55**	43.94	"	"	22600	-	40	2250	1.85
30	**3000**	**1.4**	48.80	"	"	23800	-	36	2500	1.7
25.5	**3550**	**1.2**	57.24	"	"	25400	-	30.5	2950	1.4
23	**3900**	**1.1**	63.56	"	"	26000	-	27.5	3250	1.3
22	**4100**	**1.0**	66.40	**BG80Z-../DSE13LA4**	262	26000	-	26.5	3400	1.25
20	**4500**	**0.93**	73.73	"	"	26000	-	24	3750	1.1
17.5	**5100**	**0.82**	84.55	"	"	26000	-	21	4300	0.98
34.5	**2600**	**3.2**	41.85	**BG90-../DSE13LA4**	308	65000	-	42	2150	3.9
29.5	**3050**	**2.8**	48.82	"	"	65000	-	36	2500	3.4
27	**3350**	**2.5**	53.46	"	"	65000	-	33	2700	3.1
25.5	**3550**	**1.9**	57.04	**BG90Z-../DSE13LA4**	364	65000	-	31	2900	2.3
23.5	**3850**	**1.95**	62.47	"	"	65000	-	28	3200	2.3

P = 9.5 kW

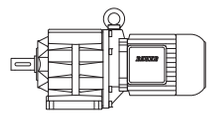

50 Hz			i	Type	m	F_{RN}	F_{RV}	60 Hz		
n_2	M_2	f_B						n_2	M_2	f_B
1/min	Nm				kg	N	N	1/min	Nm	
19	**4750**	**1.75**	76.61	**BG90Z-../DSE13LA4**	"	65000	-	23	3900	2.2
17.5	**5100**	**1.65**	83.91	"	"	65000	-	21	4300	1.95
15	**6000**	**1.4**	96.53	"	"	65000	-	18.5	4900	1.7
14	**6400**	**1.3**	105.7	"	"	65000	-	16.5	5400	1.55
11.5	**7800**	**1.1**	127.1	"	"	65000	-	14	6400	1.3
10.5	**8600**	**0.98**	139.2	"	"	65000	-	12.5	7200	1.15
8.9	**10100**	**0.83**	163.0	"	"	65000	-	11	8200	1.0
18	**5000**	**3.3**	80.85	**BG100-../DSE13LA4**	480	90000	-	22	4100	4.0
16	**5600**	**3.0**	90.02	"	"	90000	-	19.5	4650	3.6
13.5	**6700**	**2.5**	107.5	"	"	90000	-	16.5	5400	3.1
12.5	**7200**	**2.3**	119.7	"	"	90000	-	15	6000	2.8
10.5	**8600**	**1.95**	139.1	"	"	90000	-	13	6900	2.4
9.4	**9600**	**1.75**	154.8	"	"	90000	-	11.5	7800	2.2
8.1	**11200**	**1.5**	178.6	"	"	90000	-	9.8	9200	1.85
7.3	**12400**	**1.35**	198.8	"	"	90000	-	8.8	10300	1.65
6.2	**14600**	**1.15**	232.6	"	"	90000	-	7.5	12000	1.4
5.6	**16200**	**1.05**	259.0	"	"	90000	-	6.8	13300	1.25
5.4	**16800**	**1.1**	269.8	**BG100Z-../DSE13LA4**	571	90000	-	6.5	13900	1.35
4.8	**18900**	**0.98**	300.4	"	"	90000	-	5.8	15600	1.2
4.2	**21600**	**0.86**	343.6	"	"	90000	-	5.1	17700	1.05

P = 11 kW

50 Hz			i	Type	m	F_{RN}	F_{RV}	60 Hz		
n_2	M_2	f_B						n_2	M_2	f_B
1/min	Nm				kg	N	N	1/min	Nm	
600	**175**	**1.75**	2.47	**BG50-../DSE16MA4**	146	2900	-	720	145	2.1
415	**250**	**1.4**	3.55	"	"	3300	-	500	210	1.65
300	**350**	**1.15**	4.91	"	"	3500	-	360	290	1.35
220	**475**	**0.95**	6.74	"	"	3750	-	265	395	1.15
168	**620**	**0.82**	8.70	"	"	5300	-	205	510	1.0
580	**181**	**3.0**	2.52	**BG60-../DSE16MA4**	180	6200	-	700	150	3.6
395	**265**	**2.3**	3.74	"	"	7100	-	475	220	2.8
295	**355**	**1.95**	4.98	"	"	7800	-	355	295	2.3
215	**485**	**1.6**	6.88	"	"	8600	-	260	400	1.95
160	**650**	**1.35**	9.13	"	"	9800	-	193	540	1.65
145	**720**	**1.25**	10.12	"	"	10200	-	174	600	1.5
121	**860**	**1.15**	12.16	"	"	10800	-	145	720	1.35
109	**960**	**1.05**	13.47	"	"	11200	-	131	800	1.3
87	**1200**	**0.92**	16.80	"	"	12000	-	105	1000	1.1
79	**1320**	**0.87**	18.62	"	"	12400	-	95	1100	1.05
145	**720**	**3.2**	10.09	**BG70-../DSE16MA4**	214	10200	-	175	600	3.8
122	**860**	**2.7**	11.97	"	"	11200	-	148	700	3.3
112	**930**	**2.5**	13.08	"	"	11600	-	135	770	3.0
95	**1100**	**2.1**	15.53	"	"	12700	-	114	920	2.5
83	**1260**	**1.85**	17.68	"	"	13400	-	100	1050	2.2
70	**1500**	**1.55**	20.98	"	"	14600	-	84	1250	1.85
64	**1640**	**1.4**	22.92	"	"	15100	-	77	1360	1.7
54	**1940**	**1.2**	27.21	"	"	16400	-	65	1610	1.45
49.5	**2100**	**1.1**	29.69	"	"	16900	-	60	1750	1.3
41.5	**2500**	**0.92**	35.24	"	"	18300	-	50	2100	1.1
37.5	**2800**	**0.82**	39.22	"	"	19100	-	45	2300	1.0
74	**1410**	**3.0**	19.89	**BG80-../DSE16MA4**	264	15500	-	89	1180	3.6
67	**1560**	**2.7**	22.09	"	"	16500	-	80	1310	3.2
56	**1870**	**2.2**	26.44	"	"	17900	-	67	1560	2.7
50	**2100**	**2.0**	29.36	"	"	18900	-	60	1750	2.4
43	**2400**	**1.75**	34.22	"	"	20200	-	52	2000	2.1
38.5	**2700**	**1.55**	38.00	"	"	21300	-	46.5	2250	1.85

BG-series helical-geared motors

Selection helical-geared motors DSE -IE1

P = 11 kW

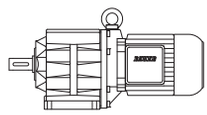

50 Hz			i	Type	m	F_{RN}	F_{RV}	60 Hz		
n_2	M_2	f_B						n_2	M_2	f_B
1/min	Nm				kg	N	N	1/min	Nm	
33.5	**3100**	**1.35**	43.94	**BG80-../DSE16MA4**	"	22600	-	40.5	2550	1.65
30	**3500**	**1.2**	48.80	"	"	23800	-	36.5	2850	1.45
26	**4000**	**1.05**	57.24	"	"	25400	-	31	3350	1.25
23	**4550**	**0.92**	63.56	"	"	26000	-	28	3750	1.1
22	**4750**	**0.88**	66.40	**BG80Z-../DSE16MA4**	307	26000	-	27	3850	1.1
20	**5200**	**0.81**	73.73	"	"	26000	-	24	4350	0.97
38.5	**2700**	**3.1**	38.21	**BG90-../DSE16MA4**	354	65000	-	46.5	2250	3.7
35	**3000**	**2.8**	41.85	"	"	65000	-	42.5	2450	3.4
30	**3500**	**2.4**	48.82	"	"	65000	-	36.5	2850	2.9
27.5	**3800**	**2.2**	53.46	"	"	65000	-	33	3150	2.7
26	**4000**	**1.7**	57.04	**BG90Z-../DSE16MA4**	413	65000	-	31	3350	2.0
23.5	**4450**	**1.7**	62.47	"	"	65000	-	28.5	3650	2.1
19.5	**5300**	**1.6**	76.61	"	"	65000	-	23	4550	1.85
17.5	**6000**	**1.4**	83.91	"	"	65000	-	21	5000	1.7
15.5	**6700**	**1.25**	96.53	"	"	65000	-	18.5	5600	1.5
14	**7500**	**1.1**	105.7	"	"	65000	-	17	6100	1.4
11.5	**9100**	**0.92**	127.1	"	"	65000	-	14	7500	1.1
10.5	**10000**	**0.84**	139.2	"	"	65000	-	13	8000	1.05
21	**5000**	**3.2**	70.69	**BG100-../DSE16MA4**	524	90000	-	25	4200	3.8
18.5	**5600**	**3.0**	80.85	"	"	90000	-	22	4750	3.5
16.5	**6300**	**2.7**	90.02	"	"	90000	-	20	5200	3.2
14	**7500**	**2.2**	107.5	"	"	90000	-	16.5	6300	2.7
12.5	**8400**	**2.0**	119.7	"	"	90000	-	15	7000	2.4
10.5	**10000**	**1.7**	139.1	"	"	90000	-	13	8000	2.1
9.5	**11000**	**1.55**	154.8	"	"	90000	-	11.5	9100	1.85
8.2	**12800**	**1.3**	178.6	"	"	90000	-	9.9	10600	1.6
7.4	**14100**	**1.2**	198.8	"	"	90000	-	8.9	11800	1.4
6.3	**16600**	**1.0**	232.6	"	"	90000	-	7.6	13800	1.2
5.7	**18400**	**0.91**	259.0	"	"	90000	-	6.8	15400	1.1
5.5	**19100**	**0.97**	269.8	**BG100Z-../DSE16MA4**	616	90000	-	6.6	15900	1.15
4.9	**21400**	**0.86**	300.4	"	"	90000	-	5.9	17800	1.05

P = 15 kW

50 Hz			i	Type	m	F_{RN}	F_{RV}	60 Hz		
n_2	M_2	f_B						n_2	M_2	f_B
1/min	Nm				kg	N	N	1/min	Nm	
600	**235**	**1.3**	2.47	**BG50-../DSE16LA4**	159	2900	-	720	198	1.55
415	**345**	**1.0**	3.55	"	"	3300	-	500	285	1.2
300	**475**	**0.84**	4.91	"	"	3500	-	360	395	1.0
580	**245**	**2.2**	2.52	**BG60-../DSE16LA4**	193	6200	-	700	200	2.7
395	**360**	**1.7**	3.74	"	"	7100	-	475	300	2.0
295	**485**	**1.4**	4.98	"	"	7800	-	355	400	1.7
215	**660**	**1.2**	6.88	"	"	8600	-	260	550	1.4
160	**890**	**1.0**	9.13	"	"	9800	-	193	740	1.2
145	**980**	**0.93**	10.12	"	"	10200	-	174	820	1.1
121	**1180**	**0.84**	12.16	"	"	10800	-	145	980	1.0
205	**690**	**3.1**	7.14	**BG70-../DSE16LA4**	228	8800	-	250	570	3.8
173	**820**	**2.8**	8.48	"	"	9500	-	210	680	3.4
145	**980**	**2.3**	10.09	"	"	10200	-	175	810	2.8
122	**1170**	**1.95**	11.97	"	"	11200	-	148	960	2.4
112	**1270**	**1.8**	13.08	"	"	11600	-	135	1060	2.2
95	**1500**	**1.55**	15.53	"	"	12700	-	114	1250	1.85
83	**1720**	**1.35**	17.68	"	"	13400	-	100	1430	1.6
70	**2000**	**1.15**	20.98	"	"	14600	-	84	1700	1.35
64	**2200**	**1.05**	22.92	"	"	15100	-	77	1860	1.25
54	**2650**	**0.87**	27.21	"	"	16400	-	65	2200	1.05
49.5	**2850**	**0.81**	29.69	"	"	16900	-	60	2350	0.98

P = 15 kW

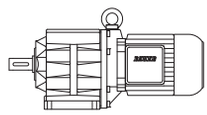

50 Hz			i	Type	m	F_{RN}	F_{RV}	60 Hz		
n_2	M_2	f_B						n_2	M_2	f_B
1/min	Nm				kg	N	N	1/min	Nm	
94	**1520**	**2.8**	15.62	**BG80-../DSE16LA4**	276	13700	-	113	1260	3.3
85	**1680**	**2.5**	17.35	"	"	14600	-	102	1400	3.0
74	**1930**	**2.2**	19.89	"	"	15500	-	89	1600	2.6
67	**2100**	**2.0**	22.09	"	"	16500	-	80	1790	2.3
56	**2550**	**1.65**	26.44	"	"	17900	-	67	2100	2.0
50	**2850**	**1.45**	29.36	"	"	18900	-	60	2350	1.8
43	**3300**	**1.25**	34.22	"	"	20200	-	52	2750	1.55
38.5	**3700**	**1.15**	38.00	"	"	21300	-	46.5	3050	1.4
33.5	**4250**	**0.99**	43.94	"	"	22600	-	40.5	3500	1.2
30	**4750**	**0.88**	48.80	"	"	23800	-	36.5	3900	1.1
49.5	**2850**	**2.9**	29.78	**BG90-../DSE16LA4**	367	65000	-	60	2350	3.6
45	**3150**	**2.7**	32.62	"	"	65000	-	54	2650	3.2
38.5	**3700**	**2.3**	38.21	"	"	65000	-	46.5	3050	2.8
35	**4050**	**2.1**	41.85	"	"	65000	-	42.5	3350	2.5
30	**4750**	**1.75**	48.82	"	"	65000	-	36.5	3900	2.2
27.5	**5200**	**1.6**	53.46	"	"	65000	-	33	4300	1.95
26	**5500**	**1.25**	57.04	**BG90Z-../DSE16LA4**	426	65000	-	31	4600	1.5
23.5	**6000**	**1.25**	62.47	"	"	65000	-	28.5	5000	1.5
19.5	**7300**	**1.15**	76.61	"	"	65000	-	23	6200	1.35
17.5	**8100**	**1.05**	83.91	"	"	65000	-	21	6800	1.25
15.5	**9200**	**0.91**	96.53	"	"	65000	-	18.5	7700	1.1
14	**10200**	**0.82**	105.7	"	"	65000	-	17	8400	1.0
31.5	**4500**	**3.1**	46.43	**BG100-../DSE16LA4**	538	90000	-	38	3750	3.8
28.5	**5000**	**2.9**	51.70	"	"	90000	-	34.5	4150	3.5
23	**6200**	**2.5**	63.49	"	"	90000	-	28	5100	3.0
21	**6800**	**2.3**	70.69	"	"	90000	-	25	5700	2.8
18.5	**7700**	**2.1**	80.85	"	"	90000	-	22	6500	2.5
16.5	**8600**	**1.95**	90.02	"	"	90000	-	20	7100	2.4
14	**10200**	**1.65**	107.5	"	"	90000	-	16.5	8600	1.95
12.5	**11400**	**1.45**	119.7	"	"	90000	-	15	9500	1.75
10.5	**13600**	**1.25**	139.1	"	"	90000	-	13	11000	1.55
9.5	**15000**	**1.1**	154.8	"	"	90000	-	11.5	12400	1.35
8.2	**17400**	**0.97**	178.6	"	"	90000	-	9.9	14400	1.15
7.4	**19300**	**0.87**	198.8	"	"	90000	-	8.9	16000	1.05

P = 18.5 kW

50 Hz			i	Type	m	F_{RN}	F_{RV}	60 Hz		
n_2	M_2	f_B						n_2	M_2	f_B
1/min	Nm				kg	N	N	1/min	Nm	
600	**290**	**1.05**	2.47	**BG50-../DSE16XA4**	169	2900	-	720	245	1.25
415	**425**	**0.82**	3.55	"	"	3300	-	500	350	0.99
580	**300**	**1.8**	2.52	**BG60-../DSE16XA4**	203	6200	-	700	250	2.1
395	**445**	**1.4**	3.74	"	"	7100	-	475	370	1.65
295	**590**	**1.15**	4.98	"	"	7800	-	355	495	1.4
215	**820**	**0.95**	6.88	"	"	8600	-	260	670	1.15
160	**1100**	**0.81**	9.13	"	"	9800	-	193	910	0.98
205	**860**	**2.5**	7.14	**BG70-../DSE16XA4**	238	8800	-	250	700	3.1
173	**1020**	**2.2**	8.48	"	"	9500	-	210	840	2.7
145	**1210**	**1.9**	10.09	"	"	10200	-	175	1000	2.3
122	**1440**	**1.6**	11.97	"	"	11200	-	148	1190	1.95
112	**1570**	**1.45**	13.08	"	"	11600	-	135	1300	1.75
95	**1850**	**1.25**	15.53	"	"	12700	-	114	1540	1.5
83	**2100**	**1.1**	17.68	"	"	13400	-	100	1760	1.3
70	**2500**	**0.92**	20.98	"	"	14600	-	84	2100	1.1
64	**2750**	**0.84**	22.92	"	"	15100	-	77	2250	1.0
128	**1380**	**3.0**	11.43	**BG80-../DSE16XA4**	286	11600	-	154	1140	3.7
116	**1520**	**2.8**	12.69	"	"	12400	-	139	1270	3.3
94	**1870**	**2.2**	15.62	"	"	13700	-	113	1560	2.7

BG-series helical-geared motors

Selection helical-geared motors DSE -IE1

P = 18.5 kW

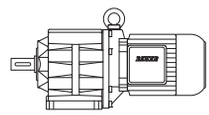

50 Hz			i	Type	m	F_{RN}	F_{RV}	60 Hz		
n_2	M_2	f_B						n_2	M_2	f_B
1/min	Nm				kg	N	N	1/min	Nm	
85	**2050**	**2.0**	17.35	**BG80-../DSE16XA4**	"	14600	-	102	1730	2.4
74	**2350**	**1.8**	19.89	"	"	15500	-	89	1980	2.1
67	**2600**	**1.6**	22.09	"	"	16500	-	80	2200	1.9
56	**3150**	**1.35**	26.44	"	"	17900	-	67	2600	1.6
50	**3500**	**1.2**	29.36	"	"	18900	-	60	2900	1.45
43	**4100**	**1.0**	34.22	"	"	20200	-	52	3350	1.25
38.5	**4550**	**0.92**	38.00	"	"	21300	-	46.5	3750	1.1
33.5	**5200**	**0.81**	43.94	"	"	22600	-	40.5	4350	0.97
65	**2700**	**3.1**	22.62	**BG90-../DSE16XA4**	377	65000	-	78	2250	3.7
59	**2950**	**2.8**	24.78	"	"	65000	-	72	2450	3.4
49.5	**3550**	**2.4**	29.78	"	"	65000	-	60	2900	2.9
45	**3900**	**2.2**	32.62	"	"	65000	-	54	3250	2.6
38.5	**4550**	**1.85**	38.21	"	"	65000	-	46.5	3750	2.2
35	**5000**	**1.7**	41.85	"	"	65000	-	42.5	4150	2.0
30	**5800**	**1.45**	48.82	"	"	65000	-	36.5	4800	1.75
27.5	**6400**	**1.3**	53.46	"	"	65000	-	33	5300	1.6
26	**6700**	**1.0**	57.04	**BG90Z-../DSE16XA4**	436	65000	-	31	5600	1.2
23.5	**7500**	**1.0**	62.47	"	"	65000	-	28.5	6100	1.25
19.5	**9000**	**0.93**	76.61	"	"	65000	-	23	7600	1.1
17.5	**10000**	**0.84**	83.91	"	"	65000	-	21	8400	1.0
31.5	**5600**	**2.5**	46.43	**BG100-../DSE16XA4**	548	90000	-	38	4600	3.1
28.5	**6100**	**2.4**	51.70	"	"	90000	-	34.5	5100	2.8
23	**7600**	**2.0**	63.49	"	"	90000	-	28	6300	2.4
21	**8400**	**1.9**	70.69	"	"	90000	-	25	7000	2.3
18.5	**9500**	**1.75**	80.85	"	"	90000	-	22	8000	2.1
16.5	**10700**	**1.55**	90.02	"	"	90000	-	20	8800	1.9
14	**12600**	**1.35**	107.5	"	"	90000	-	16.5	10700	1.55
12.5	**14100**	**1.2**	119.7	"	"	90000	-	15	11700	1.45
10.5	**16800**	**1.0**	139.1	"	"	90000	-	13	13500	1.25
9.5	**18500**	**0.91**	154.8	"	"	90000	-	11.5	15300	1.1

P = 22 kW

50 Hz			i	Type	m	F_{RN}	F_{RV}	60 Hz		
n_2	M_2	f_B						n_2	M_2	f_B
1/min	Nm				kg	N	N	1/min	Nm	
600	**350**	**0.87**	2.47	**BG50-../DSE18LA4**	237	2900	-	720	290	1.05
580	**360**	**1.5**	2.52	**BG60-../DSE18LA4**	266	6200	-	700	300	1.8
395	**530**	**1.15**	3.74	"	"	7100	-	475	440	1.4
295	**710**	**0.97**	4.98	"	"	7800	-	355	590	1.15
215	**970**	**0.8**	6.88	"	"	8600	-	260	800	0.98
295	**710**	**2.1**	4.95	**BG70-../DSE18LA4**	294	6900	-	360	580	2.6
250	**840**	**2.1**	5.87	"	"	8200	-	300	700	2.5
205	**1020**	**2.1**	7.14	"	"	8800	-	250	840	2.6
173	**1210**	**1.9**	8.48	"	"	9500	-	210	1000	2.3
145	**1440**	**1.6**	10.09	"	"	10200	-	175	1200	1.9
122	**1720**	**1.35**	11.97	"	"	11200	-	148	1410	1.65
112	**1870**	**1.25**	13.08	"	"	11600	-	135	1550	1.5
95	**2200**	**1.05**	15.53	"	"	12700	-	114	1840	1.25
83	**2500**	**0.92**	17.68	"	"	13400	-	100	2100	1.1
250	**840**	**3.2**	5.94	**BG80-../DSE18LA4**	348	8300	-	300	700	3.8
225	**930**	**3.2**	6.60	"	"	9100	-	270	770	3.8
176	**1190**	**3.2**	8.30	"	"	10400	-	215	970	3.9
159	**1320**	**3.0**	9.21	"	"	10800	-	192	1090	3.6
128	**1640**	**2.6**	11.43	"	"	11600	-	154	1360	3.1
116	**1810**	**2.3**	12.69	"	"	12400	-	139	1510	2.8
94	**2200**	**1.9**	15.62	"	"	13700	-	113	1850	2.3
85	**2450**	**1.7**	17.35	"	"	14600	-	102	2050	2.0
74	**2800**	**1.5**	19.89	"	"	15500	-	89	2350	1.8

P = 22 kW

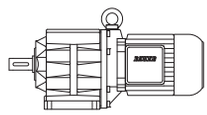

50 Hz			i	Type	m	F_{RN}	F_{RV}	60 Hz		
n_2	M_2	f_B						n_2	M_2	f_B
1/min	Nm				kg	N	N	1/min	Nm	
67	**3100**	**1.35**	22.09	**BG80-../DSE18LA4**	"	16500	-	80	2600	1.6
56	**3750**	**1.1**	26.44	"	"	17900	-	67	3100	1.35
50	**4200**	**1.0**	29.36	"	"	18900	-	60	3500	1.2
43	**4850**	**0.87**	34.22	"	"	20200	-	52	4000	1.05
82	**2550**	**3.2**	17.96	**BG90-../DSE18LA4**	440	59800	-	98	2100	3.9
75	**2800**	**3.0**	19.67	"	"	62400	-	90	2300	3.7
65	**3200**	**2.6**	22.62	"	"	65000	-	78	2650	3.2
59	**3550**	**2.4**	24.78	"	"	65000	-	72	2900	2.9
49.5	**4200**	**2.0**	29.78	"	"	65000	-	60	3500	2.4
45	**4650**	**1.8**	32.62	"	"	65000	-	54	3850	2.2
38.5	**5400**	**1.55**	38.21	"	"	65000	-	46.5	4500	1.85
35	**6000**	**1.4**	41.85	"	"	65000	-	42.5	4900	1.7
30	**7000**	**1.2**	48.82	"	"	65000	-	36.5	5700	1.45
27.5	**7600**	**1.1**	53.46	"	"	65000	-	33	6300	1.35
26	**8000**	**0.85**	57.04	**BG90Z-../DSE18LA4**	493	65000	-	31	6700	1.0
23.5	**8900**	**0.84**	62.47	"	"	65000	-	28.5	7300	1.05
61	**3400**	**3.3**	23.95	**BG100-../DSE18LA4**	609	87900	-	74	2800	4.0
43.5	**4800**	**2.7**	33.71	"	"	88500	-	53	3950	3.3
39	**5300**	**2.5**	37.54	"	"	90000	-	47	4450	3.0
31.5	**6600**	**2.1**	46.43	"	"	90000	-	38	5500	2.6
28.5	**7300**	**2.0**	51.70	"	"	90000	-	34.5	6000	2.4
23	**9100**	**1.7**	63.49	"	"	90000	-	28	7500	2.1
21	**10000**	**1.6**	70.69	"	"	90000	-	25	8400	1.9
18.5	**11300**	**1.45**	80.85	"	"	90000	-	22	9500	1.75
16.5	**12700**	**1.3**	90.02	"	"	90000	-	20	10500	1.6
14	**15000**	**1.1**	107.5	"	"	90000	-	16.5	12700	1.3
12.5	**16800**	**1.0**	119.7	"	"	90000	-	15	14000	1.2
10.5	**20000**	**0.84**	139.1	"	"	90000	-	13	16100	1.05

P = 30 kW

50 Hz			i	Type	m	F_{RN}	F_{RV}	60 Hz		
n_2	M_2	f_B						n_2	M_2	f_B
1/min	Nm				kg	N	N	1/min	Nm	
580	**490**	**1.1**	2.52	**BG60-../DSE18XA4**	284	6200	-	700	405	1.3
395	**720**	**0.85**	3.74	"	"	7100	-	475	600	1.0
295	**970**	**1.55**	4.95	**BG70-../DSE18XA4**	312	6900	-	360	790	1.9
250	**1140**	**1.55**	5.87	"	"	8200	-	300	950	1.85
205	**1390**	**1.55**	7.14	"	"	8800	-	250	1140	1.9
173	**1650**	**1.4**	8.48	"	"	9500	-	210	1360	1.7
145	**1970**	**1.15**	10.09	"	"	10200	-	175	1630	1.4
122	**2300**	**1.0**	11.97	"	"	11200	-	148	1930	1.2
112	**2550**	**0.9**	13.08	"	"	11600	-	135	2100	1.1
250	**1140**	**2.3**	5.94	**BG80-../DSE18XA4**	366	8300	-	300	950	2.8
225	**1270**	**2.3**	6.60	"	"	9100	-	270	1060	2.8
176	**1620**	**2.3**	8.30	"	"	10400	-	215	1330	2.8
159	**1800**	**2.2**	9.21	"	"	10800	-	192	1490	2.6
128	**2200**	**1.9**	11.43	"	"	11600	-	154	1860	2.3
116	**2450**	**1.7**	12.69	"	"	12400	-	139	2050	2.0
94	**3000**	**1.4**	15.62	"	"	13700	-	113	2500	1.7
85	**3350**	**1.25**	17.35	"	"	14600	-	102	2800	1.5
74	**3850**	**1.1**	19.89	"	"	15500	-	89	3200	1.3
67	**4250**	**0.99**	22.09	"	"	16500	-	80	3550	1.2
56	**5100**	**0.82**	26.44	"	"	17900	-	67	4250	0.99
134	**2100**	**3.3**	10.90	**BG90-../DSE18XA4**	458	52300	-	162	1760	4.0
110	**2600**	**2.9**	13.37	"	"	55000	-	132	2150	3.5
100	**2850**	**2.7**	14.64	"	"	57000	-	121	2350	3.3
82	**3450**	**2.4**	17.96	"	"	59800	-	98	2900	2.8
75	**3800**	**2.2**	19.67	"	"	62400	-	90	3150	2.7
65	**4400**	**1.9**	22.62	"	"	65000	-	78	3650	2.3

BG-series helical-geared motors

Selection helical-geared motors DSE -IE1

P = 30 kW

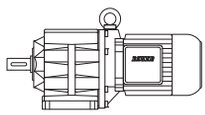

50 Hz			i	Type	m	F_{RN}	F_{RV}	60 Hz		
n_2	M_2	f_B						n_2	M_2	f_B
1/min	Nm				kg	N	N	1/min	Nm	
59	**4850**	**1.75**	24.78	**BG90-../DSE18XA4**	"	65000	-	72	3950	2.1
49.5	**5700**	**1.45**	29.78	"	"	65000	-	60	4750	1.75
45	**6300**	**1.35**	32.62	"	"	65000	-	54	5300	1.6
38.5	**7400**	**1.15**	38.21	"	"	65000	-	46.5	6100	1.4
35	**8100**	**1.05**	41.85	"	"	65000	-	42.5	6700	1.25
30	**9500**	**0.88**	48.82	"	"	65000	-	36.5	7800	1.1
27.5	**10400**	**0.81**	53.46	"	"	65000	-	33	8600	0.98
118	**2400**	**3.0**	12.45	**BG100-../DSE18XA4**	627	72100	-	142	2000	3.6
84	**3400**	**3.0**	17.39	"	"	82400	-	102	2800	3.6
61	**4650**	**2.4**	23.95	"	"	87900	-	74	3850	2.9
43.5	**6500**	**2.0**	33.71	"	"	88500	-	53	5400	2.4
39	**7300**	**1.8**	37.54	"	"	90000	-	47	6000	2.2
31.5	**9000**	**1.55**	46.43	"	"	90000	-	38	7500	1.9
28.5	**10000**	**1.45**	51.70	"	"	90000	-	34.5	8300	1.75
23	**12400**	**1.25**	63.49	"	"	90000	-	28	10200	1.5
21	**13600**	**1.15**	70.69	"	"	90000	-	25	11400	1.4
18.5	**15400**	**1.05**	80.85	"	"	90000	-	22	13000	1.25
16.5	**17300**	**0.97**	90.02	"	"	90000	-	20	14300	1.15
14	**20400**	**0.82**	107.5	"	"	90000	-	16.5	17300	0.97

P = 37 kW

50 Hz			i	Type	m	F_{RN}	F_{RV}	60 Hz		
n_2	M_2	f_B						n_2	M_2	f_B
1/min	Nm				kg	N	N	1/min	Nm	
300	**1170**	**1.3**	4.95	**BG70-..-C/DHENF22SG4**	611	6900	-	365	960	1.55
255	**1380**	**1.25**	5.87	"	"	8200	-	305	1150	1.55
210	**1680**	**1.3**	7.14	"	"	8800	-	255	1380	1.55
175	**2000**	**1.15**	8.48	"	"	9500	-	215	1640	1.4
250	**1410**	**1.9**	5.94	**BG80-..-C/DHENF22SG4**	670	8300	-	305	1150	2.3
225	**1570**	**1.9**	6.60	"	"	9100	-	275	1280	2.3
179	**1970**	**1.9**	8.30	"	"	10400	-	220	1600	2.4
161	**2150**	**1.85**	9.21	"	"	10800	-	195	1810	2.2
130	**2700**	**1.55**	11.43	"	"	11600	-	157	2250	1.85
117	**3000**	**1.4**	12.69	"	"	12400	-	142	2450	1.7
95	**3700**	**1.15**	15.62	"	"	13700	-	115	3050	1.4
86	**4100**	**1.0**	17.35	"	"	14600	-	104	3350	1.25
186	**1890**	**3.3**	7.97	**BG90-..-C/DHENF22SG4**	761	47900	-	225	1570	4.0
149	**2350**	**2.9**	9.95	"	"	50500	-	180	1960	3.5
136	**2550**	**2.7**	10.90	"	"	52300	-	165	2100	3.3
111	**3150**	**2.4**	13.37	"	"	55000	-	134	2600	2.9
102	**3450**	**2.2**	14.64	"	"	57000	-	123	2850	2.7
83	**4250**	**1.95**	17.96	"	"	59800	-	100	3500	2.4
76	**4600**	**1.85**	19.67	"	"	62400	-	92	3800	2.2
66	**5300**	**1.6**	22.62	"	"	65000	-	80	4400	1.9
60	**5800**	**1.45**	24.78	"	"	65000	-	73	4800	1.75
50	**7000**	**1.2**	29.78	"	"	65000	-	61	5700	1.45
45.5	**7700**	**1.1**	32.62	"	"	65000	-	55	6400	1.3
119	**2950**	**2.5**	12.45	**BG100-..-C/DHENF22SG4**	932	72100	-	144	2450	3.0
86	**4100**	**2.5**	17.39	"	"	82400	-	103	3400	3.0
62	**5600**	**2.0**	23.95	"	"	87900	-	75	4700	2.4
44	**8000**	**1.6**	33.71	"	"	88500	-	54	6500	2.0
39.5	**8900**	**1.5**	37.54	"	"	90000	-	48	7300	1.8
32	**11000**	**1.3**	46.43	"	"	90000	-	39	9000	1.55
29	**12100**	**1.2**	51.70	"	"	90000	-	35	10000	1.45
23.5	**15000**	**1.05**	63.49	"	"	90000	-	28.5	12300	1.25

P = 45 kW

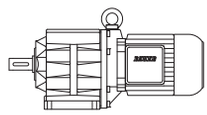

50 Hz			i	Type	m	F_{RN}	F_{RV}	60 Hz		
n_2	M_2	f_B						n_2	M_2	f_B
1/min	Nm				kg	N	N	1/min	Nm	
300	**1430**	**1.05**	4.95	**BG70-..-C/DHENF22MG4**	651	6900	-	365	1170	1.3
255	**1680**	**1.05**	5.87	"	"	8200	-	305	1400	1.25
210	**2000**	**1.1**	7.14	"	"	8800	-	255	1680	1.3
250	**1710**	**1.55**	5.94	**BG80-..-C/DHENF22MG4**	710	8300	-	305	1400	1.9
225	**1910**	**1.55**	6.60	"	"	9100	-	275	1560	1.9
179	**2400**	**1.55**	8.30	"	"	10400	-	220	1950	1.95
161	**2650**	**1.5**	9.21	"	"	10800	-	195	2200	1.8
130	**3300**	**1.25**	11.43	"	"	11600	-	157	2700	1.55
117	**3650**	**1.15**	12.69	"	"	12400	-	142	3000	1.4
230	**1860**	**3.2**	6.46	**BG90-..-C/DHENF22MG4**	801	44200	-	280	1530	3.9
205	**2050**	**3.0**	7.28	"	"	46300	-	250	1710	3.6
186	**2300**	**2.7**	7.97	"	"	47900	-	225	1910	3.3
149	**2850**	**2.4**	9.95	"	"	50500	-	180	2350	2.9
136	**3150**	**2.2**	10.90	"	"	52300	-	165	2600	2.7
111	**3850**	**1.95**	13.37	"	"	55000	-	134	3200	2.3
102	**4200**	**1.85**	14.64	"	"	57000	-	123	3450	2.2
83	**5100**	**1.6**	17.96	"	"	59800	-	100	4250	1.95
76	**5600**	**1.5**	19.67	"	"	62400	-	92	4650	1.8
66	**6500**	**1.3**	22.62	"	"	65000	-	80	5300	1.6
60	**7100**	**1.2**	24.78	"	"	65000	-	73	5800	1.45
119	**3600**	**2.0**	12.45	**BG100-..-C/DHENF22MG4**	972	72100	-	144	2950	2.5
86	**4950**	**2.0**	17.39	"	"	82400	-	103	4150	2.4
62	**6900**	**1.65**	23.95	"	"	87900	-	75	5700	1.95
44	**9700**	**1.35**	33.71	"	"	88500	-	54	7900	1.65
39.5	**10800**	**1.2**	37.54	"	"	90000	-	48	8900	1.5
32	**13400**	**1.05**	46.43	"	"	90000	-	39	11000	1.3

P = 55 kW

50 Hz			i	Type	m	F_{RN}	F_{RV}	60 Hz		
n_2	M_2	f_B						n_2	M_2	f_B
1/min	Nm				kg	N	N	1/min	Nm	
250	**2100**	**1.25**	5.94	**BG80-..-C/DHENF25SG4**	766	8300	-	305	1720	1.55
225	**2300**	**1.3**	6.60	"	"	9100	-	275	1910	1.55
179	**2900**	**1.3**	8.30	"	"	10400	-	220	2350	1.6
161	**3250**	**1.2**	9.21	"	"	10800	-	195	2650	1.5
130	**4000**	**1.05**	11.43	"	"	11600	-	157	3300	1.25
255	**2050**	**2.8**	5.90	**BG90-..-C/DHENF25SG4**	857	43000	-	305	1720	3.4
230	**2250**	**2.6**	6.46	"	"	44200	-	280	1870	3.2
205	**2550**	**2.4**	7.28	"	"	46300	-	250	2100	2.9
186	**2800**	**2.3**	7.97	"	"	47900	-	225	2300	2.7
149	**3500**	**1.95**	9.95	"	"	50500	-	180	2900	2.4
136	**3850**	**1.8**	10.90	"	"	52300	-	165	3150	2.2
111	**4700**	**1.6**	13.37	"	"	55000	-	134	3900	1.95
102	**5100**	**1.5**	14.64	"	"	57000	-	123	4250	1.8
83	**6300**	**1.3**	17.96	"	"	59800	-	100	5200	1.6
76	**6900**	**1.2**	19.67	"	"	62400	-	92	5700	1.45
66	**7900**	**1.05**	22.62	"	"	65000	-	80	6500	1.3
119	**4400**	**1.65**	12.45	**BG100-..-C/DHENF25SG4**	1028	72100	-	144	3600	2.0
86	**6100**	**1.65**	17.39	"	"	82400	-	103	5000	2.0
62	**8400**	**1.35**	23.95	"	"	87900	-	75	7000	1.6
44	**11900**	**1.1**	33.71	"	"	88500	-	54	9700	1.35
39.5	**13200**	**1.0**	37.54	"	"	90000	-	48	10900	1.2

BG-series helical-geared motors

Selection helical-geared motors DSE -IE1

P = 75 kW

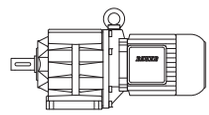

50 Hz			i	Type	m	F_{RN}	F_{RV}	60 Hz		
n_2	M_2	f_B						n_2	M_2	f_B
1/min	Nm				kg	N	N	1/min	Nm	
255	**2800**	**2.1**	5.90	**BG90-..-C/DHENF25MG4**	857	43000	-	305	2300	2.5
230	**3100**	**1.9**	6.46	**"**	"	44200	-	280	2550	2.3
205	**3450**	**1.8**	7.28	**"**	"	46300	-	250	2850	2.2
186	**3850**	**1.65**	7.97	**"**	"	47900	-	225	3150	2.0
149	**4800**	**1.4**	9.95	**"**	"	50500	-	180	3950	1.75
136	**5200**	**1.35**	10.90	**"**	"	52300	-	165	4300	1.65
111	**6400**	**1.15**	13.37	**"**	"	55000	-	134	5300	1.4
102	**7000**	**1.1**	14.64	**"**	"	57000	-	123	5800	1.35
119	**6000**	**1.2**	12.45	**BG100-..-C/DHENF25MG4**	1028	72100	-	144	4950	1.45
86	**8300**	**1.2**	17.39	**"**	"	82400	-	103	6900	1.45

P = 0.03 kW

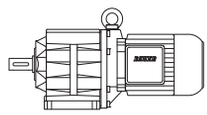

50 Hz			i	Type	m	F_{RN}	F_{RV}	60 Hz		
n_2	M_2	f_B						n_2	M_2	f_B
1/min	Nm				kg	N	N	1/min	Nm	
540	**0.53**	**7.5**	2.51	**BG04-../D04LA4**	4.4	340	-	650	0.44	9.1
370	**0.77**	**6.5**	3.65	"	"	390	-	445	0.64	7.8
310	**0.92**	**7.6**	4.39	"	"	380	-	370	0.77	9.1
255	**1.12**	**8.0**	5.36	"	"	380	-	305	0.93	9.7
205	**1.39**	**7.2**	6.67	"	"	410	-	245	1.16	8.6
158	**1.81**	**6.1**	8.58	"	"	410	-	189	1.51	7.3
150	**1.91**	**6.3**	9.00	"	"	470	-	180	1.59	7.5
137	**2.05**	**6.3**	9.90	"	"	480	-	164	1.74	7.5
125	**2.25**	**6.2**	10.82	"	"	480	-	150	1.91	7.3
114	**2.5**	**6.0**	11.90	"	"	490	-	137	2.05	7.3
108	**2.65**	**5.7**	12.55	"	"	490	-	130	2.2	6.8
103	**2.75**	**5.8**	13.20	"	"	500	-	123	2.3	7.0
93	**3.05**	**5.6**	14.52	"	"	510	-	112	2.55	6.7
83	**3.45**	**5.2**	16.44	"	"	530	-	99	2.85	6.3
75	**3.8**	**4.7**	18.08	"	"	540	-	90	3.15	5.7
64	**4.45**	**4.3**	21.12	"	"	560	-	77	3.7	5.1
59	**4.85**	**4.1**	23.23	"	"	600	-	70	4.05	4.9
56	**5.1**	**3.9**	24.45	"	"	610	-	67	4.25	4.7
51	**5.6**	**3.6**	26.89	"	"	650	-	61	4.65	4.3
44	**6.5**	**3.1**	30.91	"	"	690	-	53	5.4	3.7
40	**7.1**	**2.8**	34.00	"	"	720	-	48	5.9	3.4
38.5	**7.4**	**2.7**	35.35	"	"	730	-	46	6.2	3.2
35	**8.1**	**2.5**	38.89	"	"	750	-	42	6.8	2.9
32	**8.9**	**2.2**	42.24	"	"	750	-	38.5	7.4	2.7
29.5	**9.7**	**2.1**	46.47	"	"	750	-	35	8.1	2.5
28.5	**10**	**2.0**	47.52	"	"	750	-	34.5	8.3	2.4
26	**11**	**1.8**	52.28	"	"	750	-	31	9.2	2.2
25	**11.4**	**1.75**	54.97	"	"	750	-	29.5	9.7	2.1
22.5	**12.7**	**1.55**	60.47	"	"	750	-	27	10.6	1.9
31	**9.2**	**3.3**	43.57	**BG05-../D04LA4**	5.1	900	-	37.5	7.6	3.9
29	**9.8**	**3.1**	47.00	"	"	930	-	34.5	8.3	3.6
26.5	**10.8**	**2.8**	51.27	"	"	970	-	32	8.9	3.4
25.5	**11.2**	**2.7**	53.44	"	"	980	-	30.5	9.3	3.2
23.5	**12.1**	**2.5**	58.30	"	"	1000	-	28	10.2	2.9
20.5	**13.9**	**3.2**	66.79	**BG06-../D04LA4**	6.1	1070	-	24.5	11.6	3.9
18	**13.8**	**2.9**	75.99	**BG06G04-../D04LA4**	8.4	1070	-	21.5	11.2	3.6
16.5	**15**	**2.9**	82.89	"	"	1070	-	20	12	3.6
15	**16.5**	**2.7**	93.00	"	"	1070	-	17.5	13.8	3.3
13.5	**18.4**	**2.4**	101.5	"	"	1070	-	16	15.1	3.0
11.5	**21**	**2.1**	122.0	"	"	1070	-	13.5	17.3	2.6
9.1	**26**	**1.75**	149.0	"	"	1070	-	11	21	2.1
7.3	**33.5**	**1.35**	185.4	"	"	1070	-	8.8	26.5	1.7
5.4	**46**	**0.98**	250.2	"	"	1070	-	6.5	37	1.2
5.0	**50**	**0.9**	275.2	"	"	1070	-	5.9	41	1.1
4.1	**45***	**1.0**	330.8	"	"	1070	-	4.9	45	1.0
3.7	**45***	**1.0**	367.0	"	"	1070	-	4.5	45	1.0
3.0	**45***	**1.0**	457.0	"	"	1070	-	3.6	45	1.0
2.7	**45***	**1.0**	502.6	"	"	1070	-	3.3	45	1.0
2.3	**45***	**1.0**	587.1	"	"	1070	-	2.8	45	1.0
2.1	**45***	**1.0**	645.8	"	"	1070	-	2.6	45	1.0
1.9	**45***	**1.0**	747.5	"	"	1070	-	2.2	45	1.0
1.6	**45***	**1.0**	859.3	"	"	1070	-	1.9	45	1.0
1.5	**45***	**1.0**	945.2	"	"	1070	-	1.8	45	1.0
1.3	**45***	**1.0**	1081	"	"	1070	-	1.5	45	1.0
1.2	**45***	**1.0**	1174	"	"	1070	-	1.4	45	1.0
1.1	**45***	**1.0**	1321	"	"	1070	-	1.3	45	1.0
0.9	**45***	**1.0**	1528	"	"	1070	-	1.1	45	1.0
0.85	**45***	**1.0**	1681	"	"	1070	-	1.0	45	1.0
0.7	**45***	**1.0**	1948	"	"	1070	-	0.85	45	1.0
0.65	**45***	**1.0**	2126	"	"	1070	-	0.8	45	1.0
0.6	**45***	**1.0**	2435	"	"	1070	-	0.7	45	1.0

BG-series helical-geared motors

Selection helical-geared motors DHE - IE2

P = 0.03 kW

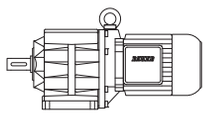

50 Hz			i	Type	m	F_{RN}	F_{RV}	60 Hz		
n_2	M_2	f_B						n_2	M_2	f_B
1/min	Nm				kg	N	N	1/min	Nm	
7.4	**38.5**	**3.1**	184.0	**BG10Z-../D04LA4**	11	2000	2800	8.9	32	3.8
7.0	**40.5**	**3.0**	194.6	"	"	2000	2800	8.4	34	3.5
6.3	**45**	**2.7**	215.7	"	"	2000	2800	7.6	37.5	3.2
5.7	**50**	**2.4**	240.4	"	"	2000	2800	6.8	42	2.9
5.1	**56**	**2.1**	266.3	"	"	2000	2800	6.1	46.5	2.6
4.9	**58**	**2.1**	276.0	"	"	2000	2800	5.9	48.5	2.5
4.5	**63**	**1.9**	305.8	"	"	2000	2800	5.3	54	2.2
3.6	**49**	**2.7**	379.6	**BG10G06-../D04LA4**	14	2000	2800	4.3	36	3.6
3.1	**57**	**2.3**	435.9	"	"	2000	2800	3.8	40	3.3
2.7	**68**	**1.9**	512.6	"	"	2000	2800	3.2	51	2.5
2.3	**83**	**1.55**	613.6	"	"	2000	2800	2.7	65	2.0
1.9	**105**	**1.25**	748.9	"	"	2000	2800	2.2	84	1.55
1.6	**130**	**1.0**	899.5	"	"	2000	2800	1.9	102	1.25
1.3	**130***	**1.0**	1081	"	"	2000	2800	1.5	130	1.0
1.1	**130***	**1.0**	1272	"	"	2000	2800	1.3	130	1.0
0.9	**130***	**1.0**	1523	"	"	2000	2800	1.1	130	1.0
0.75	**130***	**1.0**	1863	"	"	2000	2800	0.9	130	1.0
0.6	**130***	**1.0**	2356	"	"	2000	2800	0.7	130	1.0
0.55	**130***	**1.0**	2699	"	"	2000	2800	0.65	130	1.0
0.46	**130***	**1.0**	2944	"	"	2000	2800	0.6	130	1.0
0.4	**130***	**1.0**	3378	"	"	2000	2800	0.48	130	1.0
0.37	**130***	**1.0**	3684	"	"	2000	2800	0.44	130	1.0
0.31	**130***	**1.0**	4477	"	"	2000	2800	0.37	130	1.0
0.28	**130***	**1.0**	4884	"	"	2000	2800	0.34	130	1.0
2.5	**77**	**2.9**	550.6	**BG20G06-../D04LA4**	17	5000	-	3.0	58	3.8
2.1	**95**	**2.3**	671.9	"	"	5000	-	2.5	73	3.0
1.7	**125**	**1.75**	807.1	"	"	5000	-	2.1	93	2.4
1.4	**160**	**1.4**	969.9	"	"	5000	-	1.7	123	1.8
1.2	**188**	**1.15**	1142	"	"	5000	-	1.5	141	1.55
1.0	**230**	**0.96**	1366	"	"	5000	-	1.2	186	1.2
0.85	**220***	**1.0**	1672	"	"	5000	-	1.0	220	1.0
0.75	**220***	**1.0**	1824	"	"	5000	-	0.9	220	1.0
0.65	**220***	**1.0**	2114	"	"	5000	-	0.8	220	1.0
0.6	**220***	**1.0**	2422	"	"	5000	-	0.7	220	1.0
0.55	**220***	**1.0**	2642	"	"	5000	-	0.65	220	1.0
0.45	**220***	**1.0**	3031	"	"	5000	-	0.55	220	1.0
0.41	**220***	**1.0**	3306	"	"	5000	-	0.5	220	1.0
0.34	**220***	**1.0**	4017	"	"	5000	-	0.41	220	1.0
0.31	**220***	**1.0**	4383	"	"	5000	-	0.37	220	1.0
2.0	**101**	**3.2**	690.6	**BG30G06-../D04LA4**	21	6000	-	2.4	77	4.2
1.8	**116**	**2.8**	760.7	"	"	6000	-	2.2	87	3.7
1.7	**124**	**2.6**	829.5	"	"	6000	-	2.0	98	3.3
1.4	**158**	**2.1**	996.8	"	"	6000	-	1.7	122	2.7
1.3	**173**	**1.9**	1088	"	"	6000	-	1.5	143	2.3
1.1	**205**	**1.6**	1280	"	"	6000	-	1.3	166	1.95
1.0	**230**	**1.4**	1404	"	"	6000	-	1.2	184	1.75
0.8	**295**	**1.1**	1718	"	"	6000	-	0.95	240	1.35
0.75	**320**	**1.0**	1875	"	"	6000	-	0.9	255	1.25
0.65	**325***	**1.0**	2173	"	"	6000	-	0.75	325	1.0
0.5	**325***	**1.0**	2715	"	"	6000	-	0.6	325	1.0
0.44	**325***	**1.0**	3115	"	"	6000	-	0.55	325	1.0
0.4	**325***	**1.0**	3398	"	"	6000	-	0.48	325	1.0
0.35	**325***	**1.0**	3867	"	"	6000	-	0.42	325	1.0
0.3	**325***	**1.0**	4504	"	"	6000	-	0.36	325	1.0

P = 0.04 kW

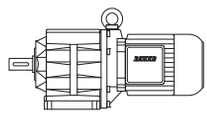

50 Hz			i	Type	m	F_{RN}	F_{RV}	60 Hz		
n_2	M_2	f_B						n_2	M_2	f_B
1/min	Nm				kg	N	N	1/min	Nm	
540	**0.7**	**5.7**	2.51	**BG04-../D04LA4**	4.4	340	-	650	0.58	6.9
370	**1.03**	**4.9**	3.65	"	"	390	-	445	0.85	5.9
310	**1.23**	**5.7**	4.39	"	"	380	-	370	1.03	6.8
255	**1.49**	**6.0**	5.36	"	"	380	-	305	1.25	7.2
205	**1.86**	**5.4**	6.67	"	"	410	-	245	1.55	6.5
158	**2.4**	**4.6**	8.58	"	"	410	-	189	2.0	5.5
150	**2.5**	**4.8**	9.00	"	"	470	-	180	2.1	5.7
137	**2.75**	**4.7**	9.90	"	"	480	-	164	2.3	5.7
125	**3.05**	**4.6**	10.82	"	"	480	-	150	2.5	5.6
114	**3.35**	**4.5**	11.90	"	"	490	-	137	2.75	5.5
108	**3.5**	**4.3**	12.55	"	"	490	-	130	2.9	5.2
103	**3.7**	**4.3**	13.20	"	"	500	-	123	3.1	5.2
93	**4.1**	**4.1**	14.52	"	"	510	-	112	3.4	5.0
83	**4.6**	**3.9**	16.44	"	"	530	-	99	3.85	4.7
75	**5.0**	**3.6**	18.08	"	"	540	-	90	4.2	4.3
64	**5.9**	**3.2**	21.12	"	"	560	-	77	4.95	3.8
59	**6.4**	**3.1**	23.23	"	"	600	-	70	5.4	3.7
56	**6.8**	**2.9**	24.45	"	"	610	-	67	5.7	3.5
51	**7.4**	**2.7**	26.89	"	"	650	-	61	6.2	3.2
44	**8.6**	**2.3**	30.91	"	"	690	-	53	7.2	2.8
40	**9.5**	**2.1**	34.00	"	"	720	-	48	7.9	2.5
38.5	**9.9**	**2.0**	35.35	"	"	730	-	46	8.3	2.4
35	**10.9**	**1.85**	38.89	"	"	750	-	42	9.0	2.2
32	**11.9**	**1.7**	42.24	"	"	750	-	38.5	9.9	2.0
29.5	**12.9**	**1.55**	46.47	"	"	750	-	35	10.9	1.85
28.5	**13.4**	**1.5**	47.52	"	"	750	-	34.5	11	1.8
26	**14.6**	**1.35**	52.28	"	"	750	-	31	12.3	1.65
25	**15.2**	**1.3**	54.97	"	"	750	-	29.5	12.9	1.55
22.5	**16.9**	**1.2**	60.47	"	"	750	-	27	14.1	1.4
39	**9.7**	**3.1**	35.00	**BG05-../D04LA4**	5.1	810	-	46.5	8.2	3.7
35.5	**10.7**	**2.8**	38.18	"	"	850	-	42.5	8.9	3.4
34	**11.2**	**2.7**	39.94	"	"	860	-	41	9.3	3.2
31	**12.3**	**2.4**	43.57	"	"	900	-	37.5	10.1	3.0
29	**13.1**	**2.3**	47.00	"	"	930	-	34.5	11	2.7
26.5	**14.4**	**2.1**	51.27	"	"	970	-	32	11.9	2.5
25.5	**14.9**	**2.0**	53.44	"	"	980	-	30.5	12.5	2.4
23.5	**16.2**	**1.85**	58.30	"	"	1000	-	28	13.6	2.2
27	**14.1**	**3.2**	50.38	**BG06-../D04LA4**	6.1	940	-	32.5	11.7	3.8
26	**14.6**	**3.1**	52.56	"	"	950	-	31	12.3	3.7
24	**15.9**	**2.8**	57.34	"	"	1000	-	28.5	13.4	3.4
22.5	**16.9**	**2.7**	61.22	"	"	1020	-	26.5	14.4	3.1
20.5	**18.6**	**2.4**	66.79	"	"	1070	-	24.5	15.5	2.9
18	**19.1**	**2.1**	75.99	**BG06G04-../D04LA4**	8.4	1070	-	21.5	15.6	2.6
16.5	**20.5**	**2.1**	82.89	"	"	1070	-	20	16.8	2.6
15	**22.5**	**2.0**	93.00	"	"	1070	-	17.5	19.2	2.3
13.5	**25.5**	**1.75**	101.5	"	"	1070	-	16	21	2.1
11.5	**29**	**1.55**	122.0	"	"	1070	-	13.5	24	1.9
9.1	**36.5**	**1.25**	149.0	"	"	1070	-	11	29.5	1.55
7.3	**46.5**	**0.97**	185.4	"	"	1070	-	8.8	37.5	1.2
10.5	**36**	**3.3**	131.8	**BG10Z-../D04LA4**	11	2000	2800	12.5	30.5	3.9
9.3	**41**	**2.9**	146.0	"	"	2000	2800	11.5	33	3.6
8.2	**46.5**	**2.6**	166.0	"	"	2000	2800	9.8	38.5	3.1
7.4	**51**	**2.4**	184.0	"	"	2000	2800	8.9	42.5	2.8
7.0	**54**	**2.2**	194.6	"	"	2000	2800	8.4	45	2.7
6.3	**60**	**2.0**	215.7	"	"	2000	2800	7.6	50	2.4
5.7	**67**	**1.8**	240.4	"	"	2000	2800	6.8	56	2.1
5.1	**74**	**1.6**	266.3	"	"	2000	2800	6.1	62	1.95
4.9	**77**	**1.55**	276.0	"	"	2000	2800	5.9	64	1.9
4.5	**84**	**1.45**	305.8	"	"	2000	2800	5.3	72	1.65

BG-series helical-geared motors

Selection helical-geared motors DHE - IE2

P = 0.04 kW

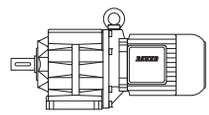

50 Hz			i	Type	m	F_{RN}	F_{RV}	60 Hz		
n_2	M_2	f_B						n_2	M_2	f_B
1/min	Nm				kg	N	N	1/min	Nm	
4.1	**60**	**2.2**	332.0	**BG10G06-../D04LA4**	14	2000	2800	4.9	45.5	2.9
3.6	**75**	**1.75**	379.6	"	"	2000	2800	4.3	58	2.2
3.1	**88**	**1.5**	435.9	"	"	2000	2800	3.8	65	2.0
2.7	**103**	**1.25**	512.6	"	"	2000	2800	3.2	81	1.6
2.3	**125**	**1.05**	613.6	"	"	2000	2800	2.7	100	1.3
1.9	**155**	**0.84**	748.9	"	"	2000	2800	2.2	128	1.0
6.1	**62**	**3.2**	222.1	**BG20Z-../D04LA4**	13	5000	-	7.3	52	3.8
3.9	**69**	**3.2**	352.1	**BG20G06-../D04LA4**	17	5000	-	4.7	52	4.2
3.5	**77**	**2.9**	391.1	"	"	5000	-	4.2	59	3.7
3.0	**93**	**2.4**	460.0	"	"	5000	-	3.6	71	3.1
2.5	**116**	**1.9**	550.6	"	"	5000	-	3.0	90	2.4
2.1	**141**	**1.55**	671.9	"	"	5000	-	2.5	112	1.95
1.7	**181**	**1.2**	807.1	"	"	5000	-	2.1	138	1.6
1.4	**225**	**0.98**	969.9	"	"	5000	-	1.7	180	1.2
1.2	**265**	**0.83**	1142	"	"	5000	-	1.5	200	1.1
2.4	**121**	**2.7**	565.8	**BG30G06-../D04LA4**	21	6000	-	2.9	93	3.5
2.0	**149**	**2.2**	690.6	"	"	6000	-	2.4	117	2.8
1.8	**169**	**1.9**	760.7	"	"	6000	-	2.2	130	2.5
1.7	**180**	**1.8**	829.5	"	"	6000	-	2.0	146	2.2
1.4	**225**	**1.45**	996.8	"	"	6000	-	1.7	178	1.85
1.3	**245**	**1.35**	1088	"	"	6000	-	1.5	205	1.6
1.1	**290**	**1.1**	1280	"	"	6000	-	1.3	235	1.4
1.0	**325**	**1.0**	1404	"	"	6000	-	1.2	260	1.25

P = 0.06 kW

50 Hz			i	Type	m	F_{RN}	F_{RV}	60 Hz		
n_2	M_2	f_B						n_2	M_2	f_B
1/min	Nm				kg	N	N	1/min	Nm	
540	**1.06**	**3.8**	2.51	**BG04-../D04LA4**	4.4	340	-	650	0.88	4.5
370	**1.54**	**3.2**	3.65	"	"	390	-	445	1.28	3.9
310	**1.84**	**3.8**	4.39	"	"	380	-	370	1.54	4.5
255	**2.2**	**4.1**	5.36	"	"	380	-	305	1.87	4.8
205	**2.75**	**3.6**	6.67	"	"	410	-	245	2.3	4.3
158	**3.6**	**3.1**	8.58	"	"	410	-	189	3.0	3.7
150	**3.8**	**3.2**	9.00	"	"	470	-	180	3.15	3.8
137	**4.15**	**3.1**	9.90	"	"	480	-	164	3.45	3.8
125	**4.55**	**3.1**	10.82	"	"	480	-	150	3.8	3.7
114	**5.0**	**3.0**	11.90	"	"	490	-	137	4.15	3.6
108	**5.3**	**2.8**	12.55	"	"	490	-	130	4.4	3.4
103	**5.5**	**2.9**	13.20	"	"	500	-	123	4.65	3.4
93	**6.1**	**2.8**	14.52	"	"	510	-	112	5.1	3.3
83	**6.9**	**2.6**	16.44	"	"	530	-	99	5.7	3.2
75	**7.6**	**2.4**	18.08	"	"	540	-	90	6.3	2.9
64	**8.9**	**2.1**	21.12	"	"	560	-	77	7.4	2.6
59	**9.7**	**2.1**	23.23	"	"	600	-	70	8.1	2.5
56	**10.2**	**1.95**	24.45	"	"	610	-	67	8.5	2.4
51	**11.2**	**1.8**	26.89	"	"	650	-	61	9.3	2.2
44	**13**	**1.55**	30.91	"	"	690	-	53	10.8	1.85
40	**14.3**	**1.4**	34.00	"	"	720	-	48	11.9	1.7
38.5	**14.8**	**1.35**	35.35	"	"	730	-	46	12.4	1.6
35	**16.3**	**1.25**	38.89	"	"	750	-	42	13.6	1.45
32	**17.9**	**1.1**	42.24	"	"	750	-	38.5	14.8	1.35
29.5	**19.4**	**1.05**	46.47	"	"	750	-	35	16.3	1.25
28.5	**20**	**1.0**	47.52	"	"	750	-	34.5	16.6	1.2
26	**22**	**0.91**	52.28	"	"	750	-	31	18.4	1.1
25	**22.5**	**0.89**	54.97	"	"	750	-	29.5	19.4	1.05
22.5	**25**	**0.8**	60.47	"	"	750	-	27	21	0.95

P = 0.06 kW

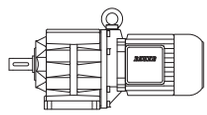

50 Hz			i	Type	m	F_{RN}	F_{RV}	60 Hz		
n_2	M_2	f_B						n_2	M_2	f_B
1/min	Nm				kg	N	N	1/min	Nm	
72	**7.9**	**3.3**	18.82	**BG05-../D04LA4**	5.1	680	-	87	6.5	4.0
66	**8.6**	**3.1**	20.53	"	"	700	-	79	7.2	3.8
57	**10**	**2.8**	24.00	"	"	740	-	68	8.4	3.3
52	**11**	**2.6**	26.18	"	"	760	-	62	9.2	3.2
49	**11.6**	**2.6**	27.82	"	"	770	-	59	9.7	3.1
44.5	**12.8**	**2.3**	30.35	"	"	760	-	54	10.6	2.8
39	**14.6**	**2.1**	35.00	"	"	810	-	46.5	12.3	2.4
35.5	**16.1**	**1.85**	38.18	"	"	850	-	42.5	13.4	2.2
34	**16.8**	**1.8**	39.94	"	"	860	-	41	13.9	2.2
31	**18.4**	**1.65**	43.57	"	"	900	-	37.5	15.2	1.95
29	**19.7**	**1.5**	47.00	"	"	930	-	34.5	16.6	1.8
26.5	**21.5**	**1.4**	51.27	"	"	970	-	32	17.9	1.7
25.5	**22**	**1.35**	53.44	"	"	980	-	30.5	18.7	1.6
23.5	**24**	**1.25**	58.30	"	"	1000	-	28	20	1.5
42	**13.6**	**3.3**	32.22	**BG06-../D04LA4**	6.1	890	-	51	11.2	4.0
38.5	**14.8**	**3.0**	35.15	"	"	880	-	46.5	12.3	3.7
37	**15.4**	**2.9**	36.91	"	"	890	-	44	13	3.5
34	**16.8**	**2.7**	40.26	"	"	890	-	40.5	14.1	3.2
29.5	**19.4**	**2.3**	46.19	"	"	890	-	35.5	16.1	2.8
27	**21**	**2.1**	50.38	"	"	940	-	32.5	17.6	2.6
26	**22**	**2.0**	52.56	"	"	950	-	31	18.4	2.4
24	**23.5**	**1.9**	57.34	"	"	1000	-	28.5	20	2.3
22.5	**25**	**1.8**	61.22	"	"	1020	-	26.5	21.5	2.1
20.5	**27.5**	**1.65**	66.79	"	"	1070	-	24.5	23	1.95
18	**29.5**	**1.35**	75.99	**BG06G04-../D04LA4**	8.4	1070	-	21.5	24.5	1.65
16.5	**32**	**1.35**	82.89	"	"	1070	-	20	26	1.65
15	**35.5**	**1.25**	93.00	"	"	1070	-	17.5	30	1.5
13.5	**39.5**	**1.15**	101.5	"	"	1070	-	16	33	1.35
11.5	**45.5**	**0.99**	122.0	"	"	1070	-	13.5	38.5	1.15
15	**38**	**3.2**	92.19	**BG10Z-../D06LA4**	14	2000	2800	18	31.5	3.8
13.5	**42**	**2.9**	102.1	"	"	2000	2800	16	35.5	3.4
12.5	**45.5**	**2.6**	109.8	"	"	2000	2800	15	38	3.2
11.5	**49.5**	**2.4**	121.7	"	"	2000	2800	13.5	42	2.9
10.5	**54**	**2.2**	131.8	"	"	2000	2800	12.5	45.5	2.6
9.3	**61**	**1.95**	146.0	"	"	2000	2800	11.5	49.5	2.4
8.2	**69**	**1.75**	166.0	"	"	2000	2800	9.8	58	2.1
7.4	**77**	**1.55**	184.0	"	"	2000	2800	8.9	64	1.9
7.0	**81**	**1.5**	194.6	"	"	2000	2800	8.4	68	1.75
6.3	**90**	**1.35**	215.7	"	"	2000	2800	7.6	75	1.6
5.7	**100**	**1.2**	240.4	"	"	2000	2800	6.8	84	1.45
5.1	**112**	**1.05**	266.3	"	"	2000	2800	6.1	93	1.3
4.9	**116**	**1.05**	276.0	"	"	2000	2800	5.9	97	1.25
4.5	**127**	**0.94**	305.8	"	"	2000	2800	5.3	108	1.1
4.1	**107**	**1.2**	332.0	**BG10G06-../D06LA4**	18	2000	2800	4.9	84	1.55
3.6	**128**	**1.0**	379.6	"	"	2000	2800	4.3	102	1.25
3.1	**149**	**0.87**	435.9	"	"	2000	2800	3.8	115	1.15
8.4	**68**	**2.9**	162.2	**BG20Z-../D06LA4**	16	5000	-	10	57	3.5
7.5	**76**	**2.6**	180.1	"	"	5000	-	9.0	63	3.2
6.8	**84**	**2.4**	199.9	"	"	5000	-	8.2	69	2.9
6.1	**93**	**2.2**	222.1	"	"	5000	-	7.3	78	2.6
5.5	**77**	**2.9**	248.0	**BG20G06-../D06LA4**	20	5000	-	6.6	60	3.7
4.6	**95**	**2.3**	297.9	"	"	5000	-	5.5	75	2.9
3.9	**118**	**1.85**	352.1	"	"	5000	-	4.7	93	2.4
3.5	**132**	**1.65**	391.1	"	"	5000	-	4.2	104	2.1
3.0	**156**	**1.4**	460.0	"	"	5000	-	3.6	125	1.75
2.5	**192**	**1.15**	550.6	"	"	5000	-	3.0	154	1.45
2.1	**230**	**0.96**	671.9	"	"	5000	-	2.5	188	1.15
6.0	**95**	**3.2**	225.9	**BG30Z-../D06LA4**	22	6000	-	7.2	79	3.8
5.2	**110**	**2.7**	261.9	"	"	6000	-	6.2	92	3.3
4.7	**121**	**2.5**	290.5	"	"	6000	-	5.6	102	2.9

BG-series helical-geared motors

Selection helical-geared motors DHE - IE2

P = 0.06 kW

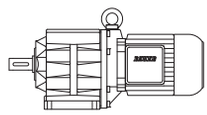

50 Hz			i	Type	m	F_{RN}	F_{RV}	60 Hz		
n_2	M_2	f_B						n_2	M_2	f_B
1/min	Nm				kg	N	N	1/min	Nm	
3.9	**118**	**2.8**	346.8	**BG30G06-../D06LA4**	25	6000	-	4.7	93	3.5
3.4	**136**	**2.4**	401.9	"	"	6000	-	4.1	107	3.0
2.9	**162**	**2.0**	472.8	"	"	6000	-	3.5	128	2.5
2.4	**200**	**1.65**	565.8	"	"	6000	-	2.9	159	2.0
2.0	**240**	**1.35**	690.6	"	"	6000	-	2.4	196	1.65
1.8	**275**	**1.2**	760.7	"	"	6000	-	2.2	215	1.5
1.7	**290**	**1.1**	829.5	"	"	6000	-	2.0	240	1.35
1.4	**360**	**0.9**	996.8	"	"	6000	-	1.7	290	1.1
1.3	**390**	**0.83**	1088	"	"	6000	-	1.5	330	0.98
2.2	**147**	**3.2**	640.0	**BG40G10-../D06LA4**	43	7000	-	2.6	107	4.3
1.9	**176**	**2.6**	710.9	"	"	7000	-	2.3	123	3.8
1.8	**179**	**2.6**	789.1	"	"	7000	-	2.1	133	3.5
1.4	**255**	**1.8**	965.2	"	"	7000	-	1.7	186	2.5
1.2	**315**	**1.5**	1225	"	"	7000	-	1.4	250	1.85
0.95	**440**	**1.05**	1459	"	"	7000	-	1.2	315	1.5
1.5	**230**	**3.0**	960.2	**BG50G10-../D06LA4**	51	10000	-	1.7	186	3.7
1.2	**315**	**2.2**	1219	"	"	10000	-	1.4	250	2.8
0.95	**445**	**1.55**	1452	"	"	10000	-	1.2	315	2.2
0.8	**550**	**1.25**	1729	"	"	10000	-	0.95	445	1.55
0.7	**660**	**1.05**	2076	"	"	10000	-	0.8	550	1.25
0.8	**445**	**2.9**	1741	**BG60G20-../D06LA4**	100	16000	-	0.95	330	3.9
0.75	**490**	**2.7**	1880	"	"	16000	-	0.9	365	3.6
0.65	**610**	**2.1**	2249	"	"	16000	-	0.75	490	2.7
0.48	**920**	**1.4**	2818	"	"	16000	-	0.6	680	1.9
0.42	**1090**	**1.2**	3234	"	"	16000	-	0.55	770	1.7
0.38	**1230**	**1.05**	3592	"	"	16000	-	0.46	970	1.35
0.49	**930**	**2.7**	2774	**BG70G20-../D06LA4**	130	20000	-	0.6	710	3.5
0.43	**1090**	**2.3**	3184	"	"	20000	-	0.55	800	3.1
0.35	**1390**	**1.8**	3925	"	"	20000	-	0.42	1120	2.2

P = 0.09 kW

50 Hz			i	Type	m	F_{RN}	F_{RV}	60 Hz		
n_2	M_2	f_B						n_2	M_2	f_B
1/min	Nm				kg	N	N	1/min	Nm	
540	**1.59**	**2.5**	2.51	**BG04-../D04LA4**	4.4	340	-	650	1.32	3.0
370	**2.3**	**2.2**	3.65	"	"	390	-	445	1.93	2.6
310	**2.75**	**2.5**	4.39	"	"	380	-	370	2.3	3.0
255	**3.35**	**2.7**	5.36	"	"	380	-	305	2.8	3.2
205	**4.15**	**2.4**	6.67	"	"	410	-	245	3.5	2.9
158	**5.4**	**2.0**	8.58	"	"	410	-	189	4.5	2.4
150	**5.7**	**2.1**	9.00	"	"	470	-	180	4.75	2.5
137	**6.2**	**2.1**	9.90	"	"	480	-	164	5.2	2.5
125	**6.8**	**2.1**	10.82	"	"	480	-	150	5.7	2.5
114	**7.5**	**2.0**	11.90	"	"	490	-	137	6.2	2.4
108	**7.9**	**1.9**	12.55	"	"	490	-	130	6.6	2.3
103	**8.3**	**1.95**	13.20	"	"	500	-	123	6.9	2.3
93	**9.2**	**1.85**	14.52	"	"	510	-	112	7.6	2.2
83	**10.3**	**1.75**	16.44	"	"	530	-	99	8.6	2.1
75	**11.4**	**1.6**	18.08	"	"	540	-	90	9.5	1.9
64	**13.4**	**1.4**	21.12	"	"	560	-	77	11.1	1.7
59	**14.5**	**1.4**	23.23	"	"	600	-	70	12.2	1.65
56	**15.3**	**1.3**	24.45	"	"	610	-	67	12.8	1.55
51	**16.8**	**1.2**	26.89	"	"	650	-	61	14	1.45
44	**19.5**	**1.05**	30.91	"	"	690	-	53	16.2	1.25
40	**21**	**0.95**	34.00	"	"	720	-	48	17.9	1.1
38.5	**22**	**0.91**	35.35	"	"	730	-	46	18.6	1.1
35	**24.5**	**0.82**	38.89	"	"	750	-	42	20	1.0

P = 0.09 kW

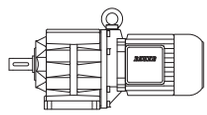

50 Hz			i	Type	m	F_{RN}	F_{RV}	60 Hz		
n_2	M_2	f_B						n_2	M_2	f_B
1/min	Nm				kg	N	N	1/min	Nm	
128	**6.7**	**3.0**	10.59	**BG05-../D04LA4**	5.1	590	-	153	5.6	3.6
117	**7.3**	**2.9**	11.55	"	"	600	-	141	6.0	3.5
113	**7.6**	**2.8**	12.05	"	"	510	-	135	6.3	3.3
108	**7.9**	**2.8**	12.60	"	"	610	-	129	6.6	3.3
99	**8.6**	**2.7**	13.75	"	"	630	-	118	7.2	3.2
89	**9.6**	**2.5**	15.23	"	"	640	-	107	8.0	3.0
82	**10.4**	**2.4**	16.62	"	"	660	-	98	8.7	2.9
72	**11.9**	**2.2**	18.82	"	"	680	-	87	9.8	2.7
66	**13**	**2.1**	20.53	"	"	700	-	79	10.8	2.5
57	**15**	**1.85**	24.00	"	"	740	-	68	12.6	2.2
52	**16.5**	**1.75**	26.18	"	"	760	-	62	13.8	2.1
49	**17.5**	**1.7**	27.82	"	"	770	-	59	14.5	2.1
44.5	**19.3**	**1.55**	30.35	"	"	760	-	54	15.9	1.9
39	**22**	**1.35**	35.00	"	"	810	-	46.5	18.4	1.65
35.5	**24**	**1.25**	38.18	"	"	850	-	42.5	20	1.5
34	**25**	**1.2**	39.94	"	"	860	-	41	20.5	1.45
31	**27.5**	**1.1**	43.57	"	"	900	-	37.5	22.5	1.35
29	**29.5**	**1.0**	47.00	"	"	930	-	34.5	24.5	1.2
26.5	**32**	**0.94**	51.27	"	"	970	-	32	26.5	1.15
25.5	**33.5**	**0.9**	53.44	"	"	980	-	30.5	28	1.05
23.5	**36.5**	**0.82**	58.30	"	"	1000	-	28	30.5	0.98
65	**13.2**	**3.0**	20.82	**BG06-../D04LA4**	6.1	800	-	78	11	3.6
60	**14.3**	**3.0**	22.71	"	"	810	-	72	11.9	3.6
53	**16.2**	**2.8**	25.48	"	"	850	-	64	13.4	3.4
49	**17.5**	**2.6**	27.80	"	"	840	-	59	14.5	3.1
42	**20**	**2.3**	32.22	"	"	890	-	51	16.8	2.7
38.5	**22**	**2.0**	35.15	"	"	880	-	46.5	18.4	2.4
37	**23**	**1.95**	36.91	"	"	890	-	44	19.5	2.3
34	**25**	**1.8**	40.26	"	"	890	-	40.5	21	2.1
29.5	**29**	**1.55**	46.19	"	"	890	-	35.5	24	1.9
27	**31.5**	**1.45**	50.38	"	"	940	-	32.5	26	1.75
26	**33**	**1.35**	52.56	"	"	950	-	31	27.5	1.65
24	**35.5**	**1.25**	57.34	"	"	1000	-	28.5	30	1.5
22.5	**38**	**1.2**	61.22	"	"	1020	-	26.5	32	1.4
20.5	**41.5**	**1.1**	66.79	"	"	1070	-	24.5	35	1.3
18	**45.5**	**0.88**	75.99	**BG06G04-../D04LA4**	8.4	1070	-	21.5	37.5	1.05
16.5	**49.5**	**0.87**	82.89	"	"	1070	-	20	40.5	1.05
15	**54**	**0.83**	93.00	"	"	1070	-	17.5	46.5	0.97
23.5	**36.5**	**3.3**	57.48	**BG10-../D06LA4**	13	2000	2800	28.5	30	4.0
21.5	**39.5**	**3.0**	63.69	"	"	2000	2800	25.5	33.5	3.6
20.5	**41.5**	**2.9**	66.00	"	"	2000	2800	25	34	3.5
18.5	**46**	**2.6**	73.13	"	"	2000	2800	22.5	38	3.2
17.5	**49**	**2.4**	77.40	**BG10Z-../D06LA4**	14	2000	2800	21	40.5	3.0
16	**53**	**2.3**	85.76	"	"	2000	2800	19	45	2.7
15	**57**	**2.1**	92.19	"	"	2000	2800	18	47.5	2.5
13.5	**63**	**1.9**	102.1	"	"	2000	2800	16	53	2.3
12.5	**68**	**1.75**	109.8	"	"	2000	2800	15	57	2.1
11.5	**74**	**1.6**	121.7	"	"	2000	2800	13.5	63	1.9
10.5	**81**	**1.5**	131.8	"	"	2000	2800	12.5	68	1.75
9.3	**92**	**1.3**	146.0	"	"	2000	2800	11.5	74	1.6
8.2	**104**	**1.15**	166.0	"	"	2000	2800	9.8	87	1.4
7.4	**116**	**1.05**	184.0	"	"	2000	2800	8.9	96	1.25
7.0	**122**	**0.98**	194.6	"	"	2000	2800	8.4	102	1.2
6.3	**136**	**0.88**	215.7	"	"	2000	2800	7.6	113	1.05
5.7	**150**	**0.8**	240.4	"	"	2000	2800	6.8	126	0.95
4.9	**146**	**0.89**	276.4	**BG10G06-../D06LA4**	18	2000	2800	5.9	116	1.1
13	**66**	**3.0**	104.7	**BG20Z-../D06LA4**	16	5000	-	15.5	55	3.6
12	**71**	**2.8**	112.8	"	"	5000	-	14.5	59	3.4
11	**78**	**2.6**	125.3	"	"	5000	-	13	66	3.0
9.6	**89**	**2.2**	141.3	"	"	5000	-	11.5	74	2.7
8.4	**102**	**1.95**	162.2	"	"	5000	-	10	85	2.4
7.5	**114**	**1.75**	180.1	"	"	5000	-	9.0	95	2.1

BG-series helical-geared motors

Selection helical-geared motors DHE - IE2

P = 0.09 kW

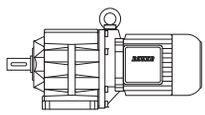

50 Hz			i	Type	m	F_{RN}	F_{RV}	60 Hz		
n_2	M_2	f_B						n_2	M_2	f_B
1/min	Nm				kg	N	N	1/min	Nm	
6.8	**126**	**1.6**	199.9	**BG20Z-../D06LA4**	"	5000	-	8.2	104	1.9
6.1	**140**	**1.45**	222.1	"	"	5000	-	7.3	117	1.7
5.5	**130**	**1.7**	248.0	**BG20G06-../D06LA4**	20	5000	-	6.6	103	2.1
4.6	**157**	**1.4**	297.9	"	"	5000	-	5.5	127	1.75
3.9	**192**	**1.15**	352.1	"	"	5000	-	4.7	154	1.45
3.5	**210**	**1.05**	391.1	"	"	5000	-	4.2	173	1.25
3.0	**250**	**0.88**	460.0	"	"	5000	-	3.6	200	1.1
9.5	**90**	**3.3**	142.5	**BG30Z-../D06LA4**	22	6000	-	11.5	74	4.1
9.0	**95**	**3.2**	151.5	"	"	6000	-	11	78	3.8
8.1	**106**	**2.8**	168.1	"	"	6000	-	9.7	88	3.4
7.4	**116**	**2.6**	182.9	"	"	6000	-	8.9	96	3.1
6.7	**128**	**2.3**	202.9	"	"	6000	-	8.0	107	2.8
6.0	**143**	**2.1**	225.9	"	"	6000	-	7.2	119	2.5
5.2	**165**	**1.8**	261.9	"	"	6000	-	6.2	138	2.2
4.7	**182**	**1.65**	290.5	"	"	6000	-	5.6	153	1.95
4.5	**161**	**2.0**	306.2	**BG30G06-../D06LA4**	25	6000	-	5.3	132	2.5
3.9	**192**	**1.7**	346.8	"	"	6000	-	4.7	154	2.1
3.4	**220**	**1.5**	401.9	"	"	6000	-	4.1	177	1.85
2.9	**260**	**1.25**	472.8	"	"	6000	-	3.5	210	1.55
2.4	**320**	**1.0**	565.8	"	"	6000	-	2.9	255	1.25
2.0	**385**	**0.84**	690.6	"	"	6000	-	2.4	315	1.05
6.1	**140**	**3.0**	221.9	**BG40Z-../D06LA4**	38	7000	-	7.4	116	3.7
5.5	**156**	**2.7**	246.5	"	"	7000	-	6.6	130	3.3
5.0	**171**	**2.5**	273.6	"	"	7000	-	6.0	143	3.0
3.1	**170**	**2.7**	448.8	**BG40G10-../D06LA4**	43	7000	-	3.7	125	3.7
2.6	**210**	**2.2**	534.2	"	"	7000	-	3.1	160	2.9
2.2	**275**	**1.7**	640.0	"	"	7000	-	2.6	215	2.2
1.9	**325**	**1.45**	710.9	"	"	7000	-	2.3	245	1.9
1.8	**335**	**1.4**	789.1	"	"	7000	-	2.1	270	1.7
1.4	**460**	**1.0**	965.2	"	"	7000	-	1.7	350	1.35
1.2	**550**	**0.85**	1225	"	"	7000	-	1.4	455	1.0
2.6	**210**	**3.3**	531.5	**BG50G10-../D06LA4**	51	10000	-	3.1	161	4.3
2.2	**280**	**2.5**	621.3	"	"	10000	-	2.7	205	3.4
2.0	**300**	**2.3**	708.3	"	"	10000	-	2.3	245	2.8
1.8	**335**	**2.1**	785.1	"	"	10000	-	2.1	270	2.6
1.5	**420**	**1.65**	960.2	"	"	10000	-	1.7	355	1.95
1.2	**550**	**1.25**	1219	"	"	10000	-	1.4	455	1.5
1.3	**420**	**3.1**	1051	**BG60G20-../D06LA4**	100	16000	-	1.6	295	4.4
1.2	**465**	**2.8**	1168	"	"	16000	-	1.4	365	3.6
1.1	**510**	**2.5**	1346	"	"	16000	-	1.3	395	3.3
0.95	**630**	**2.1**	1496	"	"	16000	-	1.1	510	2.5
0.8	**800**	**1.65**	1741	"	"	16000	-	0.95	630	2.1
0.75	**870**	**1.5**	1880	"	"	16000	-	0.9	680	1.9
0.65	**1050**	**1.25**	2249	"	"	16000	-	0.75	870	1.5
0.85	**770**	**3.2**	1666	**BG70G20-../D06LA4**	130	20000	-	1.0	620	4.0
0.7	**980**	**2.6**	1994	"	"	20000	-	0.85	770	3.2
0.65	**1080**	**2.3**	2215	"	"	20000	-	0.75	900	2.8
0.49	**1510**	**1.65**	2774	"	"	20000	-	0.6	1190	2.1
0.43	**1750**	**1.45**	3184	"	"	20000	-	0.55	1320	1.9
0.35	**2200**	**1.15**	3925	"	"	20000	-	0.42	1800	1.4

P = 0.12 kW

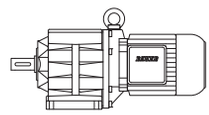

50 Hz			i	Type	m	F_{RN}	F_{RV}	60 Hz		
n_2	M_2	f_B						n_2	M_2	f_B
1/min	Nm				kg	N	N	1/min	Nm	
540	**2.1**	**1.9**	2.51	**BG04-../D04LA4**	4.4	340	-	650	1.76	2.3
370	**3.05**	**1.65**	3.65	"	"	390	-	445	2.55	1.95
310	**3.65**	**1.9**	4.39	"	"	380	-	370	3.05	2.3
255	**4.45**	**2.0**	5.36	"	"	380	-	305	3.75	2.4
205	**5.5**	**1.8**	6.67	"	"	410	-	245	4.65	2.2
158	**7.2**	**1.55**	8.58	"	"	410	-	189	6.0	1.85
150	**7.6**	**1.6**	9.00	"	"	470	-	180	6.3	1.9
137	**8.3**	**1.55**	9.90	"	"	480	-	164	6.9	1.9
125	**9.1**	**1.55**	10.82	"	"	480	-	150	7.6	1.85
114	**10**	**1.5**	11.90	"	"	490	-	137	8.3	1.8
108	**10.6**	**1.4**	12.55	"	"	490	-	130	8.8	1.7
103	**11.1**	**1.45**	13.20	"	"	500	-	123	9.3	1.7
93	**12.3**	**1.4**	14.52	"	"	510	-	112	10.2	1.65
83	**13.8**	**1.3**	16.44	"	"	530	-	99	11.5	1.55
75	**15.2**	**1.2**	18.08	"	"	540	-	90	12.7	1.4
64	**17.9**	**1.05**	21.12	"	"	560	-	77	14.8	1.3
59	**19.4**	**1.05**	23.23	"	"	600	-	70	16.3	1.25
56	**20**	**1.0**	24.45	"	"	610	-	67	17.1	1.15
51	**22**	**0.91**	26.89	"	"	650	-	61	18.7	1.05
295	**3.85**	**3.1**	4.59	**BG05-../D04LA4**	5.1	490	-	355	3.2	3.8
250	**4.55**	**3.1**	5.46	"	"	490	-	300	3.8	3.7
205	**5.5**	**2.9**	6.60	"	"	510	-	250	4.55	3.5
174	**6.5**	**2.8**	7.80	"	"	530	-	210	5.4	3.3
166	**6.9**	**2.6**	8.15	"	"	510	-	199	5.7	3.2
159	**7.2**	**2.6**	8.51	"	"	550	-	191	6.0	3.2
128	**8.9**	**2.2**	10.59	"	"	590	-	153	7.4	2.7
117	**9.7**	**2.2**	11.55	"	"	600	-	141	8.1	2.6
113	**10.1**	**2.1**	12.05	"	"	510	-	135	8.4	2.5
108	**10.6**	**2.1**	12.60	"	"	610	-	129	8.8	2.5
99	**11.5**	**2.0**	13.75	"	"	630	-	118	9.7	2.4
89	**12.8**	**1.9**	15.23	"	"	640	-	107	10.7	2.2
82	**13.9**	**1.8**	16.62	"	"	660	-	98	11.6	2.2
72	**15.9**	**1.65**	18.82	"	"	680	-	87	13.1	2.0
66	**17.3**	**1.55**	20.53	"	"	700	-	79	14.5	1.85
57	**20**	**1.4**	24.00	"	"	740	-	68	16.8	1.65
52	**22**	**1.3**	26.18	"	"	760	-	62	18.4	1.6
49	**23**	**1.3**	27.82	"	"	770	-	59	19.4	1.55
44.5	**25.5**	**1.2**	30.35	"	"	760	-	54	21	1.45
39	**29**	**1.05**	35.00	"	"	810	-	46.5	24.5	1.2
35.5	**32**	**0.94**	38.18	"	"	850	-	42.5	26.5	1.15
34	**33.5**	**0.9**	39.94	"	"	860	-	41	27.5	1.1
31	**36.5**	**0.82**	43.57	"	"	900	-	37.5	30.5	0.98
110	**10.4**	**3.2**	12.30	**BG06-../D04LA4**	6.1	670	-	132	8.6	3.8
105	**10.9**	**3.0**	12.98	"	"	600	-	125	9.1	3.6
92	**12.4**	**2.7**	14.78	"	"	730	-	110	10.4	3.3
84	**13.6**	**2.6**	16.13	"	"	740	-	101	11.3	3.1
78	**14.6**	**2.6**	17.40	"	"	760	-	94	12.1	3.1
72	**15.9**	**2.5**	18.98	"	"	770	-	86	13.3	3.0
65	**17.6**	**2.3**	20.82	"	"	800	-	78	14.6	2.7
60	**19.1**	**2.3**	22.71	"	"	810	-	72	15.9	2.7
53	**21.5**	**2.1**	25.48	"	"	850	-	64	17.9	2.5
49	**23**	**1.95**	27.80	"	"	840	-	59	19.4	2.3
42	**27**	**1.65**	32.22	"	"	890	-	51	22	2.0
38.5	**29.5**	**1.55**	35.15	"	"	880	-	46.5	24.5	1.85
37	**30.5**	**1.5**	36.91	"	"	890	-	44	26	1.75
34	**33.5**	**1.35**	40.26	"	"	890	-	40.5	28	1.6
29.5	**38.5**	**1.15**	46.19	"	"	890	-	35.5	32	1.4
27	**42**	**1.05**	50.38	"	"	940	-	32.5	35	1.3
26	**44**	**1.0**	52.56	"	"	950	-	31	36.5	1.25
24	**47.5**	**0.95**	57.34	"	"	1000	-	28.5	40	1.15
22.5	**50**	**0.9**	61.22	"	"	1020	-	26.5	43	1.05
20.5	**55**	**0.82**	66.79	"	"	1070	-	24.5	46.5	0.97

BG-series helical-geared motors

Selection helical-geared motors DHE - IE2

P = 0.12 kW

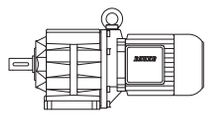

50 Hz			i	Type	m	F_{RN}	F_{RV}	60 Hz		
n_2	M_2	f_B						n_2	M_2	f_B
1/min	Nm				kg	N	N	1/min	Nm	
31	**36.5**	**3.3**	43.99	**BG10-../D06LA4**	13	1880	2600	37	30.5	3.9
29.5	**38.5**	**3.1**	46.55	"	"	1920	2650	35	32.5	3.7
26.5	**43**	**2.8**	51.57	"	"	2000	2800	31.5	36	3.3
23.5	**48.5**	**2.5**	57.48	"	"	2000	2800	28.5	40	3.0
21.5	**53**	**2.3**	63.69	"	"	2000	2800	25.5	44.5	2.7
20.5	**55**	**2.2**	66.00	"	"	2000	2800	25	45.5	2.6
18.5	**61**	**1.95**	73.13	"	"	2000	2800	22.5	50	2.4
17.5	**65**	**1.85**	77.40	**BG10Z-../D06LA4**	14	2000	2800	21	54	2.2
16	**71**	**1.7**	85.76	"	"	2000	2800	19	60	2.0
15	**76**	**1.6**	92.19	"	"	2000	2800	18	63	1.9
13.5	**84**	**1.45**	102.1	"	"	2000	2800	16	71	1.7
12.5	**91**	**1.3**	109.8	"	"	2000	2800	15	76	1.6
11.5	**99**	**1.2**	121.7	"	"	2000	2800	13.5	84	1.45
10.5	**109**	**1.1**	131.8	"	"	2000	2800	12.5	91	1.3
9.3	**123**	**0.98**	146.0	"	"	2000	2800	11.5	99	1.2
8.2	**139**	**0.86**	166.0	"	"	2000	2800	9.8	116	1.05
7.0	**143**	**0.91**	194.9	**BG10G06-../D06LA4**	18	2000	2800	8.4	115	1.15
17.5	**65**	**3.1**	78.60	**BG20Z-../D06LA4**	16	5000	-	21	54	3.7
15.5	**73**	**2.7**	87.30	"	"	5000	-	19	60	3.3
14.5	**79**	**2.5**	94.27	"	"	5000	-	17.5	65	3.1
13	**88**	**2.3**	104.7	"	"	5000	-	15.5	73	2.7
12	**95**	**2.1**	112.8	"	"	5000	-	14.5	79	2.5
11	**104**	**1.9**	125.3	"	"	5000	-	13	88	2.3
9.6	**119**	**1.7**	141.3	"	"	5000	-	11.5	99	2.0
8.4	**136**	**1.45**	162.2	"	"	5000	-	10	114	1.75
7.5	**152**	**1.3**	180.1	"	"	5000	-	9.0	127	1.55
6.8	**168**	**1.2**	199.9	"	"	5000	-	8.2	139	1.45
6.1	**187**	**1.05**	222.1	"	"	5000	-	7.3	156	1.3
5.5	**182**	**1.2**	248.0	**BG20G06-../D06LA4**	20	5000	-	6.6	147	1.5
4.6	**220**	**1.0**	297.9	"	"	5000	-	5.5	179	1.25
3.9	**265**	**0.83**	352.1	"	"	5000	-	4.7	215	1.0
12.5	**91**	**3.3**	109.6	**BG30Z-../D06LA4**	22	6000	-	15	76	3.9
11.5	**99**	**3.0**	121.6	"	"	6000	-	13.5	84	3.6
11	**104**	**2.9**	128.5	"	"	6000	-	13	88	3.4
9.5	**120**	**2.5**	142.5	"	"	6000	-	11.5	99	3.0
9.0	**127**	**2.4**	151.5	"	"	6000	-	11	104	2.9
8.1	**141**	**2.1**	168.1	"	"	6000	-	9.7	118	2.5
7.4	**154**	**1.95**	182.9	"	"	6000	-	8.9	128	2.3
6.7	**171**	**1.75**	202.9	"	"	6000	-	8.0	143	2.1
6.0	**191**	**1.55**	225.9	"	"	6000	-	7.2	159	1.9
5.2	**220**	**1.35**	261.9	"	"	6000	-	6.2	184	1.65
4.7	**240**	**1.25**	290.5	"	"	6000	-	5.6	200	1.5
4.5	**220**	**1.5**	306.2	**BG30G06-../D06LA4**	25	6000	-	5.3	186	1.75
3.9	**265**	**1.25**	346.8	"	"	6000	-	4.7	215	1.5
3.4	**300**	**1.1**	401.9	"	"	6000	-	4.1	245	1.35
2.9	**360**	**0.9**	472.8	"	"	6000	-	3.5	290	1.1
8.7	**131**	**3.2**	156.9	**BG40Z-../D06LA4**	38	7000	-	10.5	109	3.9
8.2	**139**	**3.1**	166.1	"	"	7000	-	9.8	116	3.7
7.4	**154**	**2.8**	184.4	"	"	7000	-	8.8	130	3.3
6.8	**168**	**2.5**	199.9	"	"	7000	-	8.2	139	3.1
6.1	**187**	**2.3**	221.9	"	"	7000	-	7.4	154	2.8
5.5	**205**	**2.1**	246.5	"	"	7000	-	6.6	173	2.5
5.0	**225**	**1.9**	273.6	"	"	7000	-	6.0	191	2.2
4.7	**153**	**3.0**	288.6	**BG40G10-../D06LA4**	43	7000	-	5.7	111	4.2
3.9	**194**	**2.4**	353.5	"	"	7000	-	4.6	149	3.1
3.1	**260**	**1.8**	448.8	"	"	7000	-	3.7	200	2.3
2.6	**320**	**1.45**	534.2	"	"	7000	-	3.1	250	1.85
2.2	**405**	**1.15**	640.0	"	"	7000	-	2.6	325	1.45
1.9	**475**	**0.98**	710.9	"	"	7000	-	2.3	370	1.25
1.8	**495**	**0.94**	789.1	"	"	7000	-	2.1	405	1.15

P = 0.12 kW

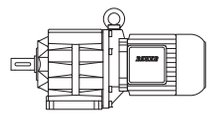

50 Hz			i	Type	m	F_{RN}	F_{RV}	60 Hz		
n_2	M_2	f_B						n_2	M_2	f_B
1/min	Nm				kg	N	N	1/min	Nm	
6.0	**191**	**3.3**	226.9	**BG50Z-../D06LA4**	47	10000	-	7.2	159	4.0
5.3	**215**	**2.9**	258.6	"	"	10000	-	6.3	181	3.5
4.8	**235**	**2.7**	286.7	"	"	10000	-	5.7	200	3.2
3.1	**260**	**2.7**	446.5	**BG50G10-../D06LA4**	51	10000	-	3.7	200	3.5
2.6	**320**	**2.2**	531.5	"	"	10000	-	3.1	250	2.8
2.2	**410**	**1.7**	621.3	"	"	10000	-	2.7	310	2.2
2.0	**445**	**1.55**	708.3	"	"	10000	-	2.3	370	1.85
1.8	**495**	**1.4**	785.1	"	"	10000	-	2.1	405	1.7
1.5	**610**	**1.15**	960.2	"	"	10000	-	1.7	520	1.35
1.2	**790**	**0.87**	1219	"	"	10000	-	1.4	660	1.05
1.7	**470**	**2.8**	804.5	**BG60G20-../D06LA4**	100	16000	-	2.1	340	3.8
1.6	**490**	**2.7**	891.5	"	"	16000	-	1.9	375	3.5
1.3	**640**	**2.0**	1051	"	"	16000	-	1.6	475	2.7
1.2	**700**	**1.85**	1168	"	"	16000	-	1.4	570	2.3
1.1	**770**	**1.7**	1346	"	"	16000	-	1.3	610	2.1
0.95	**930**	**1.4**	1496	"	"	16000	-	1.1	770	1.7
0.8	**1160**	**1.1**	1741	"	"	16000	-	0.95	930	1.4
0.75	**1250**	**1.05**	1880	"	"	16000	-	0.9	1000	1.3
1.0	**900**	**2.8**	1389	**BG70G20-../D06LA4**	130	20000	-	1.2	710	3.5
0.9	**1030**	**2.4**	1543	"	"	20000	-	1.1	800	3.1
0.85	**1100**	**2.3**	1666	"	"	20000	-	1.0	900	2.8
0.7	**1390**	**1.8**	1994	"	"	20000	-	0.85	1100	2.3
0.65	**1520**	**1.65**	2215	"	"	20000	-	0.75	1280	1.95
0.49	**2050**	**1.2**	2774	"	"	20000	-	0.6	1670	1.5
0.43	**2400**	**1.05**	3184	"	"	20000	-	0.55	1840	1.35

P = 0.18 kW

50 Hz			i	Type	m	F_{RN}	F_{RV}	60 Hz		
n_2	M_2	f_B						n_2	M_2	f_B
1/min	Nm				kg	N	N	1/min	Nm	
520	**3.3**	**2.7**	2.64	**BG05-../D05LA4**	7.0	420	-	620	2.75	3.3
400	**4.25**	**2.4**	3.38	"	"	460	-	480	3.55	2.8
295	**5.8**	**2.1**	4.59	"	"	490	-	355	4.8	2.5
250	**6.8**	**2.1**	5.46	"	"	490	-	300	5.7	2.5
205	**8.3**	**1.95**	6.60	"	"	510	-	250	6.8	2.4
174	**9.8**	**1.85**	7.80	"	"	530	-	210	8.1	2.2
166	**10.3**	**1.75**	8.15	"	"	510	-	199	8.6	2.1
159	**10.8**	**1.75**	8.51	"	"	550	-	191	9.0	2.1
128	**13.4**	**1.5**	10.59	"	"	590	-	153	11.2	1.8
117	**14.6**	**1.45**	11.55	"	"	600	-	141	12.1	1.75
113	**15.2**	**1.4**	12.05	"	"	510	-	135	12.7	1.65
108	**15.9**	**1.4**	12.60	"	"	610	-	129	13.3	1.65
99	**17.3**	**1.35**	13.75	"	"	630	-	118	14.5	1.6
89	**19.3**	**1.25**	15.23	"	"	640	-	107	16	1.5
82	**20.5**	**1.2**	16.62	"	"	660	-	98	17.5	1.45
72	**23.5**	**1.1**	18.82	"	"	680	-	87	19.7	1.3
66	**26**	**1.05**	20.53	"	"	700	-	79	21.5	1.25
57	**30**	**0.93**	24.00	"	"	740	-	68	25	1.1
52	**33**	**0.88**	26.18	"	"	760	-	62	27.5	1.05
49	**35**	**0.86**	27.82	"	"	770	-	59	29	1.05
230	**7.4**	**3.2**	5.96	**BG06-../D05LA4**	8.0	570	-	275	6.2	3.9
193	**8.9**	**2.9**	7.01	"	"	580	-	235	7.3	3.6
161	**10.6**	**2.6**	8.39	"	"	600	-	194	8.8	3.2
144	**11.9**	**2.5**	9.38	"	"	640	-	173	9.9	3.0
132	**13**	**2.4**	10.24	"	"	640	-	159	10.8	2.9
120	**14.3**	**2.2**	11.28	"	"	670	-	144	11.9	2.7
110	**15.6**	**2.1**	12.30	"	"	670	-	132	13	2.5
105	**16.3**	**2.0**	12.98	"	"	600	-	125	13.7	2.4
92	**18.6**	**1.85**	14.78	"	"	730	-	110	15.6	2.2
84	**20**	**1.75**	16.13	"	"	740	-	101	17	2.1

BG-series helical-geared motors

Selection helical-geared motors DHE - IE2

P = 0.18 kW

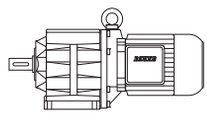

50 Hz			i	Type	m	F_{RN}	F_{RV}	60 Hz		
n_2	M_2	f_B						n_2	M_2	f_B
1/min	Nm				kg	N	N	1/min	Nm	
78	**22**	**1.75**	17.40	**BG06-../D05LA4**	"	760	-	94	18.2	2.1
72	**23.5**	**1.7**	18.98	"	"	770	-	86	19.9	2.0
65	**26**	**1.55**	20.82	"	"	800	-	78	22	1.8
60	**28.5**	**1.5**	22.71	"	"	810	-	72	23.5	1.85
53	**32**	**1.4**	25.48	"	"	850	-	64	26.5	1.7
49	**35**	**1.3**	27.80	"	"	840	-	59	29	1.55
42	**40.5**	**1.1**	32.22	"	"	890	-	51	33.5	1.35
38.5	**44.5**	**1.0**	35.15	"	"	880	-	46.5	36.5	1.25
37	**46**	**0.98**	36.91	"	"	890	-	44	39	1.15
34	**50**	**0.9**	40.26	"	"	890	-	40.5	42	1.05
46.5	**36.5**	**3.3**	29.09	**BG10-../D06LA4**	13	1540	2150	56	30.5	3.9
43	**39.5**	**3.0**	31.52	"	"	1600	2200	52	33	3.6
39	**44**	**2.7**	34.92	"	"	1690	2350	46.5	36.5	3.3
34.5	**49.5**	**2.4**	39.70	"	"	1780	2450	41	41.5	2.9
31	**55**	**2.2**	43.99	"	"	1880	2600	37	46	2.6
29.5	**58**	**2.1**	46.55	"	"	1920	2650	35	49	2.4
26.5	**64**	**1.9**	51.57	"	"	2000	2800	31.5	54	2.2
23.5	**73**	**1.65**	57.48	"	"	2000	2800	28.5	60	2.0
21.5	**79**	**1.5**	63.69	"	"	2000	2800	25.5	67	1.8
20.5	**83**	**1.45**	66.00	"	"	2000	2800	25	68	1.75
18.5	**92**	**1.3**	73.13	"	"	2000	2800	22.5	76	1.6
17.5	**98**	**1.2**	77.40	**BG10Z-../D06LA4**	14	2000	2800	21	81	1.5
16	**107**	**1.1**	85.76	"	"	2000	2800	19	90	1.35
15	**114**	**1.05**	92.19	"	"	2000	2800	18	95	1.25
13.5	**127**	**0.94**	102.1	"	"	2000	2800	16	107	1.1
12.5	**137**	**0.88**	109.8	"	"	2000	2800	15	114	1.05
11.5	**149**	**0.81**	121.7	"	"	2000	2800	13.5	127	0.94
36	**47.5**	**3.2**	37.90	**BG15-../D06LA4**	13	3000	6000	43	39.5	3.8
28.5	**60**	**3.3**	47.92	**BG20-../D06LA4**	16	4750	-	34	50	4.0
25.5	**67**	**3.0**	53.22	"	"	4950	-	30.5	56	3.6
23	**74**	**2.7**	59.07	"	"	5000	-	27.5	62	3.2
21	**81**	**2.5**	65.62	"	"	5000	-	25	68	2.9
20	**85**	**2.4**	67.53	**BG20Z-../D06LA4**	16	5000	-	24	71	2.8
17.5	**98**	**2.0**	78.60	"	"	5000	-	21	81	2.5
15.5	**110**	**1.8**	87.30	"	"	5000	-	19	90	2.2
14.5	**118**	**1.7**	94.27	"	"	5000	-	17.5	98	2.0
13	**132**	**1.5**	104.7	"	"	5000	-	15.5	110	1.8
12	**143**	**1.4**	112.8	"	"	5000	-	14.5	118	1.7
11	**156**	**1.3**	125.3	"	"	5000	-	13	132	1.5
9.6	**179**	**1.1**	141.3	"	"	5000	-	11.5	149	1.35
8.4	**200**	**1.0**	162.2	"	"	5000	-	10	171	1.15
7.5	**225**	**0.89**	180.1	"	"	5000	-	9.0	191	1.05
6.8	**250**	**0.8**	199.9	"	"	5000	-	8.2	205	0.98
21	**81**	**3.3**	65.79	**BG30Z-../D06LA4**	22	6000	-	25	68	3.9
18.5	**92**	**3.3**	73.51	"	"	6000	-	22.5	76	3.9
17	**101**	**3.0**	81.55	"	"	6000	-	20	85	3.5
16	**107**	**2.8**	86.13	"	"	6000	-	19	90	3.3
14.5	**118**	**2.5**	95.55	"	"	6000	-	17	101	3.0
12.5	**137**	**2.2**	109.6	"	"	6000	-	15	114	2.6
11.5	**149**	**2.0**	121.6	"	"	6000	-	13.5	127	2.4
11	**156**	**1.9**	128.5	"	"	6000	-	13	132	2.3
9.5	**180**	**1.65**	142.5	"	"	6000	-	11.5	149	2.0
9.0	**191**	**1.55**	151.5	"	"	6000	-	11	156	1.9
8.1	**210**	**1.45**	168.1	"	"	6000	-	9.7	177	1.7
7.4	**230**	**1.3**	182.9	"	"	6000	-	8.9	193	1.55
6.7	**255**	**1.2**	202.9	"	"	6000	-	8.0	210	1.45
6.0	**285**	**1.05**	225.9	"	"	6000	-	7.2	235	1.3
5.2	**330**	**0.91**	261.9	"	"	6000	-	6.2	275	1.1
4.7	**365**	**0.82**	290.5	"	"	6000	-	5.6	305	0.98
4.5	**350**	**0.93**	306.2	**BG30G06-../D06LA4**	25	6000	-	5.3	290	1.1

P = 0.18 kW

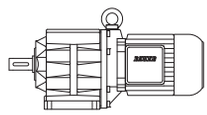

50 Hz			i	Type	m	F_{RN}	F_{RV}	60 Hz		
n_2	M_2	f_B						n_2	M_2	f_B
1/min	Nm				kg	N	N	1/min	Nm	
13	**132**	**3.2**	107.5	**BG40Z-../D06LA4**	38	7000	-	15.5	110	3.9
11.5	**149**	**2.9**	121.3	"	"	7000	-	13.5	127	3.3
10.5	**163**	**2.6**	134.6	"	"	7000	-	12.5	137	3.1
9.6	**179**	**2.4**	141.4	"	"	7000	-	11.5	149	2.9
8.7	**197**	**2.2**	156.9	"	"	7000	-	10.5	163	2.6
8.2	**205**	**2.1**	166.1	"	"	7000	-	9.8	175	2.4
7.4	**230**	**1.85**	184.4	"	"	7000	-	8.8	195	2.2
6.8	**250**	**1.7**	199.9	"	"	7000	-	8.2	205	2.1
6.1	**280**	**1.5**	221.9	"	"	7000	-	7.4	230	1.85
5.5	**310**	**1.35**	246.5	"	"	7000	-	6.6	260	1.65
5.0	**340**	**1.25**	273.6	"	"	7000	-	6.0	285	1.5
4.7	**275**	**1.7**	288.6	**BG40G10-../D06LA4**	43	7000	-	5.7	210	2.2
3.9	**340**	**1.35**	353.5	"	"	7000	-	4.6	270	1.7
3.1	**445**	**1.05**	448.8	"	"	7000	-	3.7	355	1.3
2.6	**540**	**0.86**	534.2	"	"	7000	-	3.1	435	1.05
8.2	**205**	**3.1**	164.9	**BG50Z-../D06LA4**	47	10000	-	9.9	173	3.6
7.4	**230**	**2.7**	182.8	"	"	10000	-	8.9	193	3.3
6.6	**260**	**2.4**	204.7	"	"	10000	-	8.0	210	3.0
6.0	**285**	**2.2**	226.9	"	"	10000	-	7.2	235	2.7
5.3	**320**	**1.95**	258.6	"	"	10000	-	6.3	270	2.3
4.8	**355**	**1.75**	286.7	"	"	10000	-	5.7	300	2.1
3.9	**340**	**2.0**	351.7	**BG50G10-../D06LA4**	51	10000	-	4.7	265	2.6
3.1	**445**	**1.55**	446.5	"	"	10000	-	3.7	355	1.95
2.6	**540**	**1.3**	531.5	"	"	10000	-	3.1	435	1.6
2.2	**670**	**1.05**	621.3	"	"	10000	-	2.7	520	1.35
2.0	**730**	**0.95**	708.3	"	"	10000	-	2.3	620	1.1
1.8	**810**	**0.85**	785.1	"	"	10000	-	2.1	680	1.0
2.7	**485**	**2.7**	504.9	**BG60G20-../D06LA4**	100	16000	-	3.3	370	3.5
2.5	**520**	**2.5**	559.5	"	"	16000	-	2.9	425	3.1
2.1	**650**	**2.0**	651.3	"	"	16000	-	2.5	520	2.5
1.7	**800**	**1.65**	804.5	"	"	16000	-	2.1	610	2.1
1.6	**840**	**1.55**	891.5	"	"	16000	-	1.9	670	1.95
1.3	**1080**	**1.2**	1051	"	"	16000	-	1.6	830	1.55
1.2	**1180**	**1.1**	1168	"	"	16000	-	1.4	980	1.35
1.1	**1290**	**1.0**	1346	"	"	16000	-	1.3	1050	1.25
1.8	**750**	**3.3**	790.2	**BG70G20-../D06LA4**	130	20000	-	2.1	610	4.1
1.6	**860**	**2.9**	877.6	"	"	20000	-	1.9	690	3.6
1.4	**1000**	**2.5**	1035	"	"	20000	-	1.6	850	2.9
1.2	**1190**	**2.1**	1193	"	"	20000	-	1.4	990	2.5
1.0	**1470**	**1.7**	1389	"	"	20000	-	1.2	1190	2.1
0.9	**1670**	**1.5**	1543	"	"	20000	-	1.1	1320	1.9
0.85	**1780**	**1.4**	1666	"	"	20000	-	1.0	1470	1.7
0.7	**2200**	**1.15**	1994	"	"	20000	-	0.85	1780	1.4
0.65	**2400**	**1.05**	2215	"	"	20000	-	0.75	2050	1.2

P = 0.25 kW

50 Hz			i	Type	m	F_{RN}	F_{RV}	60 Hz		
n_2	M_2	f_B						n_2	M_2	f_B
1/min	Nm				kg	N	N	1/min	Nm	
520	**4.55**	**2.0**	2.64	**BG05-../D05LA4**	7.0	420	-	620	3.85	2.3
400	**5.9**	**1.7**	3.38	"	"	460	-	480	4.95	2.0
295	**8.0**	**1.5**	4.59	"	"	490	-	355	6.7	1.8
250	**9.5**	**1.45**	5.46	"	"	490	-	300	7.9	1.75
205	**11.6**	**1.4**	6.60	"	"	510	-	250	9.5	1.7
174	**13.7**	**1.3**	7.80	"	"	530	-	210	11.3	1.6
166	**14.3**	**1.25**	8.15	"	"	510	-	199	11.9	1.5
159	**15**	**1.25**	8.51	"	"	550	-	191	12.5	1.5
128	**18.6**	**1.1**	10.59	"	"	590	-	153	15.6	1.3
117	**20**	**1.05**	11.55	"	"	600	-	141	16.9	1.25

BG-series helical-geared motors

Selection helical-geared motors DHE - IE2

P = 0.25 kW

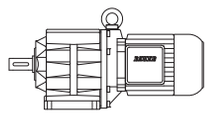

50 Hz			i	Type	m	F_{RN}	F_{RV}	60 Hz		
n_2	M_2	f_B						n_2	M_2	f_B
1/min	Nm				kg	N	N	1/min	Nm	
113	**21**	**1.0**	12.05	**BG05-../D05LA4**	"	510	-	135	17.6	1.2
108	**22**	**1.0**	12.60	"	"	610	-	129	18.5	1.2
99	**24**	**0.96**	13.75	"	"	630	-	118	20	1.15
89	**26.5**	**0.91**	15.23	"	"	640	-	107	22	1.1
82	**29**	**0.86**	16.62	"	"	660	-	98	24	1.05
360	**6.6**	**3.0**	3.78	**BG06-../D05LA4**	8.0	520	-	430	5.5	3.6
300	**7.9**	**2.8**	4.54	"	"	530	-	360	6.6	3.3
230	**10.3**	**2.3**	5.96	"	"	570	-	275	8.6	2.8
193	**12.3**	**2.1**	7.01	"	"	580	-	235	10.1	2.6
161	**14.8**	**1.9**	8.39	"	"	600	-	194	12.3	2.3
144	**16.5**	**1.8**	9.38	"	"	640	-	173	13.8	2.2
132	**18**	**1.7**	10.24	"	"	640	-	159	15	2.1
120	**19.8**	**1.6**	11.28	"	"	670	-	144	16.5	1.95
110	**21.5**	**1.55**	12.30	"	"	670	-	132	18	1.85
105	**22.5**	**1.45**	12.98	"	"	600	-	125	19.1	1.75
92	**25.5**	**1.35**	14.78	"	"	730	-	110	21.5	1.6
84	**28**	**1.25**	16.13	"	"	740	-	101	23.5	1.5
78	**30.5**	**1.25**	17.40	"	"	760	-	94	25	1.5
72	**33**	**1.2**	18.98	"	"	770	-	86	27.5	1.45
65	**36.5**	**1.1**	20.82	"	"	800	-	78	30.5	1.3
60	**39.5**	**1.1**	22.71	"	"	810	-	72	33	1.3
53	**45**	**1.0**	25.48	"	"	850	-	64	37	1.2
49	**48.5**	**0.93**	27.80	"	"	840	-	59	40	1.15
42	**56**	**0.8**	32.22	"	"	890	-	51	46.5	0.97
66	**36**	**3.3**	20.51	**BG10-../D06LA4**	13	1290	1800	79	30	4.0
62	**38.5**	**3.1**	22.04	"	"	1330	1860	74	32	3.8
56	**42.5**	**2.8**	24.42	"	"	1410	1970	67	35.5	3.4
52	**45.5**	**2.6**	26.26	"	"	1460	2000	62	38.5	3.1
46.5	**51**	**2.4**	29.09	"	"	1540	2150	56	42.5	2.8
43	**55**	**2.2**	31.52	"	"	1600	2200	52	45.5	2.6
39	**61**	**1.95**	34.92	"	"	1690	2350	46.5	51	2.4
34.5	**69**	**1.75**	39.70	"	"	1780	2450	41	58	2.1
31	**77**	**1.55**	43.99	"	"	1880	2600	37	64	1.9
29.5	**80**	**1.5**	46.55	"	"	1920	2650	35	68	1.75
26.5	**90**	**1.35**	51.57	"	"	2000	2800	31.5	75	1.6
23.5	**101**	**1.2**	57.48	"	"	2000	2800	28.5	83	1.45
21.5	**111**	**1.1**	63.69	"	"	2000	2800	25.5	93	1.3
20.5	**116**	**1.05**	66.00	"	"	2000	2800	25	95	1.25
18.5	**129**	**0.93**	73.13	"	"	2000	2800	22.5	106	1.15
17.5	**136**	**0.88**	77.40	**BG10Z-../D06LA4**	14	2000	2800	21	113	1.05
16	**149**	**0.81**	85.76	"	"	2000	2800	19	125	0.96
50	**47.5**	**3.2**	27.08	**BG15-../D06LA4**	13	3000	6000	60	39.5	3.8
45	**53**	**2.8**	30.08	"	"	3000	6000	54	44	3.4
39.5	**60**	**2.5**	34.20	"	"	3000	6000	47.5	50	3.0
36	**66**	**2.3**	37.90	"	"	3000	6000	43	55	2.7
36.5	**65**	**3.1**	37.02	**BG20-../D06LA4**	16	4300	-	44	54	3.7
32.5	**73**	**2.7**	41.76	"	"	4500	-	39	61	3.3
29.5	**80**	**2.5**	46.38	"	"	4700	-	35	68	2.9
28.5	**83**	**2.4**	47.92	"	"	4750	-	34	70	2.9
25.5	**93**	**2.2**	53.22	"	"	4950	-	30.5	78	2.6
23	**103**	**1.95**	59.07	"	"	5000	-	27.5	86	2.3
21	**113**	**1.75**	65.62	"	"	5000	-	25	95	2.1
20	**119**	**1.7**	67.53	**BG20Z-../D06LA4**	16	5000	-	24	99	2.0
17.5	**136**	**1.45**	78.60	"	"	5000	-	21	113	1.75
15.5	**154**	**1.3**	87.30	"	"	5000	-	19	125	1.6
14.5	**164**	**1.2**	94.27	"	"	5000	-	17.5	136	1.45
13	**183**	**1.1**	104.7	"	"	5000	-	15.5	154	1.3
12	**198**	**1.0**	112.8	"	"	5000	-	14.5	164	1.2
11	**215**	**0.93**	125.3	"	"	5000	-	13	183	1.1
9.6	**245**	**0.82**	141.3	"	"	5000	-	11.5	205	0.98

P = 0.25 kW

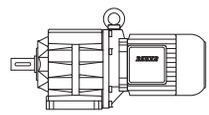

50 Hz			i	Type	m	F_{RN}	F_{RV}	60 Hz		
n_2	M_2	f_B						n_2	M_2	f_B
1/min	Nm				kg	N	N	1/min	Nm	
26	**91**	**3.3**	52.44	**BG30-../D06LA4**	20	6000	-	31	77	3.9
23.5	**101**	**3.0**	58.18	"	"	6000	-	28	85	3.5
22.5	**106**	**2.8**	60.79	"	"	6000	-	27	88	3.4
20.5	**116**	**2.6**	67.44	"	"	6000	-	24.5	97	3.1
18.5	**129**	**2.3**	73.51	**BG30Z-../D06LA4**	22	6000	-	22.5	106	2.8
17	**140**	**2.1**	81.55	"	"	6000	-	20	119	2.5
16	**149**	**2.0**	86.13	"	"	6000	-	19	125	2.4
14.5	**164**	**1.85**	95.55	"	"	6000	-	17	140	2.1
12.5	**191**	**1.55**	109.6	"	"	6000	-	15	159	1.9
11.5	**205**	**1.45**	121.6	"	"	6000	-	13.5	176	1.7
11	**215**	**1.4**	128.5	"	"	6000	-	13	183	1.65
9.5	**250**	**1.2**	142.5	"	"	6000	-	11.5	205	1.45
9.0	**265**	**1.15**	151.5	"	"	6000	-	11	215	1.4
8.1	**290**	**1.05**	168.1	"	"	6000	-	9.7	245	1.2
7.4	**320**	**0.94**	182.9	"	"	6000	-	8.9	265	1.15
6.7	**355**	**0.85**	202.9	"	"	6000	-	8.0	295	1.0
18	**132**	**3.2**	75.19	**BG40Z-../D06LA4**	38	7000	-	22	108	3.9
16.5	**144**	**3.0**	82.00	"	"	7000	-	20	119	3.6
15	**159**	**2.7**	91.02	"	"	7000	-	18	132	3.2
14	**170**	**2.5**	96.86	"	"	7000	-	17	140	3.0
13	**183**	**2.3**	107.5	"	"	7000	-	15.5	154	2.8
11.5	**205**	**2.1**	121.3	"	"	7000	-	13.5	176	2.4
10.5	**225**	**1.9**	134.6	"	"	7000	-	12.5	191	2.2
9.6	**245**	**1.75**	141.4	"	"	7000	-	11.5	205	2.1
8.7	**270**	**1.55**	156.9	"	"	7000	-	10.5	225	1.9
8.2	**290**	**1.45**	166.1	"	"	7000	-	9.8	240	1.75
7.4	**320**	**1.35**	184.4	"	"	7000	-	8.8	270	1.55
6.8	**350**	**1.2**	199.9	"	"	7000	-	8.2	290	1.45
6.1	**390**	**1.1**	221.9	"	"	7000	-	7.4	320	1.35
5.5	**430**	**0.99**	246.5	"	"	7000	-	6.6	360	1.2
5.0	**475**	**0.89**	273.6	"	"	7000	-	6.0	395	1.1
4.7	**415**	**1.1**	288.6	**BG40G10-../D06LA4**	43	7000	-	5.7	325	1.45
3.9	**510**	**0.91**	353.5	"	"	7000	-	4.6	415	1.1
10.5	**225**	**2.8**	128.9	**BG50Z-../D06LA4**	47	10000	-	13	183	3.4
9.5	**250**	**2.5**	142.9	"	"	10000	-	11.5	205	3.1
8.2	**290**	**2.2**	164.9	"	"	10000	-	9.9	240	2.6
7.4	**320**	**1.95**	182.8	"	"	10000	-	8.9	265	2.4
6.6	**360**	**1.75**	204.7	"	"	10000	-	8.0	295	2.1
6.0	**395**	**1.6**	226.9	"	"	10000	-	7.2	330	1.9
5.3	**450**	**1.4**	258.6	"	"	10000	-	6.3	375	1.7
4.8	**495**	**1.25**	286.7	"	"	10000	-	5.7	415	1.5
3.9	**510**	**1.35**	351.7	**BG50G10-../D06LA4**	51	10000	-	4.7	405	1.7
3.1	**660**	**1.05**	446.5	"	"	10000	-	3.7	530	1.3
2.6	**800**	**0.86**	531.5	"	"	10000	-	3.1	650	1.05
4.5	**400**	**3.3**	306.1	**BG60G20-../D06LA4**	100	16000	-	5.3	320	4.1
4.1	**440**	**3.0**	334.3	"	"	16000	-	4.9	345	3.8
3.7	**490**	**2.7**	370.5	"	"	16000	-	4.4	385	3.4
3.1	**600**	**2.2**	437.3	"	"	16000	-	3.8	460	2.8
2.7	**730**	**1.8**	504.9	"	"	16000	-	3.3	570	2.3
2.5	**790**	**1.65**	559.5	"	"	16000	-	2.9	650	2.0
2.1	**970**	**1.35**	651.3	"	"	16000	-	2.5	790	1.65
1.7	**1200**	**1.1**	804.5	"	"	16000	-	2.1	930	1.4
1.6	**1260**	**1.05**	891.5	"	"	16000	-	1.9	1030	1.25
1.3	**1590**	**0.82**	1051	"	"	16000	-	1.6	1250	1.05
2.4	**840**	**3.0**	577.3	**BG70G20-../D06LA4**	130	20000	-	2.9	670	3.7
2.1	**960**	**2.6**	665.8	"	"	20000	-	2.5	780	3.2
1.8	**1120**	**2.2**	790.2	"	"	20000	-	2.1	930	2.7
1.6	**1280**	**1.95**	877.6	"	"	20000	-	1.9	1050	2.4
1.4	**1480**	**1.7**	1035	"	"	20000	-	1.6	1270	1.95
1.2	**1750**	**1.45**	1193	"	"	20000	-	1.4	1470	1.7
1.0	**2100**	**1.2**	1389	"	"	20000	-	1.2	1750	1.45
0.9	**2400**	**1.05**	1543	"	"	20000	-	1.1	1930	1.3

BG-series helical-geared motors

Selection helical-geared motors DHE - IE2

P = 0.3 kW

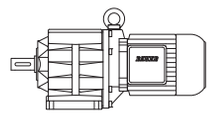

50 Hz			i	Type	m	F_{RN}	F_{RV}	60 Hz		
n_2	M_2	f_B						n_2	M_2	f_B
1/min	Nm				kg	N	N	1/min	Nm	
520	**5.5**	**1.65**	2.64	**BG05-../D07LA4**	11	420	-	620	4.6	1.95
400	**7.1**	**1.4**	3.38	"	"	460	-	480	5.9	1.7
295	**9.7**	**1.25**	4.59	"	"	490	-	355	8.0	1.5
250	**11.4**	**1.25**	5.46	"	"	490	-	300	9.5	1.45
205	**13.9**	**1.15**	6.60	"	"	510	-	250	11.4	1.4
174	**16.4**	**1.1**	7.80	"	"	530	-	210	13.6	1.3
166	**17.2**	**1.05**	8.15	"	"	510	-	199	14.3	1.25
159	**18**	**1.05**	8.51	"	"	550	-	191	15	1.25
128	**22**	**0.91**	10.59	"	"	590	-	153	18.7	1.05
117	**24**	**0.88**	11.55	"	"	600	-	141	20	1.05
113	**25**	**0.84**	12.05	"	"	510	-	135	21	1.0
108	**26.5**	**0.83**	12.60	"	"	610	-	129	22	1.0
99	**28.5**	**0.81**	13.75	"	"	630	-	118	24	0.96
360	**7.9**	**2.5**	3.78	**BG06-../D07LA4**	12	520	-	430	6.6	3.0
300	**9.5**	**2.3**	4.54	"	"	530	-	360	7.9	2.8
230	**12.4**	**1.95**	5.96	"	"	570	-	275	10.4	2.3
193	**14.8**	**1.75**	7.01	"	"	580	-	235	12.1	2.1
161	**17.7**	**1.6**	8.39	"	"	600	-	194	14.7	1.9
144	**19.8**	**1.5**	9.38	"	"	640	-	173	16.5	1.8
132	**21.5**	**1.45**	10.24	"	"	640	-	159	18	1.7
120	**23.5**	**1.35**	11.28	"	"	670	-	144	19.8	1.6
110	**26**	**1.25**	12.30	"	"	670	-	132	21.5	1.55
105	**27**	**1.2**	12.98	"	"	600	-	125	22.5	1.45
92	**31**	**1.1**	14.78	"	"	730	-	110	26	1.3
84	**34**	**1.05**	16.13	"	"	740	-	101	28	1.25
78	**36.5**	**1.05**	17.40	"	"	760	-	94	30	1.25
72	**39.5**	**1.0**	18.98	"	"	770	-	86	33	1.2
65	**44**	**0.91**	20.82	"	"	800	-	78	36.5	1.1
60	**47.5**	**0.91**	22.71	"	"	810	-	72	39.5	1.1
53	**54**	**0.83**	25.48	"	"	850	-	64	44.5	1.0
73	**39**	**3.1**	18.51	**BG10-../D07LA4**	15	1210	1690	88	32.5	3.7
66	**43**	**2.8**	20.51	"	"	1290	1800	79	36	3.3
62	**46**	**2.6**	22.04	"	"	1330	1860	74	38.5	3.1
56	**51**	**2.4**	24.42	"	"	1410	1970	67	42.5	2.8
52	**55**	**2.2**	26.26	"	"	1460	2000	62	46	2.6
46.5	**61**	**1.95**	29.09	"	"	1540	2150	56	51	2.4
43	**66**	**1.8**	31.52	"	"	1600	2200	52	55	2.2
39	**73**	**1.65**	34.92	"	"	1690	2350	46.5	61	1.95
34.5	**83**	**1.45**	39.70	"	"	1780	2450	41	69	1.75
31	**92**	**1.3**	43.99	"	"	1880	2600	37	77	1.55
29.5	**97**	**1.25**	46.55	"	"	1920	2650	35	81	1.5
26.5	**108**	**1.1**	51.57	"	"	2000	2800	31.5	90	1.35
23.5	**121**	**0.99**	57.48	"	"	2000	2800	28.5	100	1.2
21.5	**133**	**0.9**	63.69	"	"	2000	2800	25.5	112	1.05
20.5	**139**	**0.86**	66.00	"	"	2000	2800	25	114	1.05
50	**57**	**2.6**	27.08	**BG15-../D07LA4**	15	3000	6000	60	47.5	3.2
45	**63**	**2.4**	30.08	"	"	3000	6000	54	53	2.8
39.5	**72**	**2.1**	34.20	"	"	3000	6000	47.5	60	2.5
36	**79**	**1.9**	37.90	"	"	3000	6000	43	66	2.3
44	**65**	**3.1**	30.94	**BG20-../D07LA4**	18	4000	-	53	54	3.7
41	**69**	**2.9**	33.33	"	"	4100	-	49	58	3.4
36.5	**78**	**2.6**	37.02	"	"	4300	-	44	65	3.1
32.5	**88**	**2.3**	41.76	"	"	4500	-	39	73	2.7
29.5	**97**	**2.1**	46.38	"	"	4700	-	35	81	2.5
28.5	**100**	**2.0**	47.92	"	"	4750	-	34	84	2.4
25.5	**112**	**1.8**	53.22	"	"	4950	-	30.5	93	2.2
23	**124**	**1.6**	59.07	"	"	5000	-	27.5	104	1.9
21	**136**	**1.45**	65.62	"	"	5000	-	25	114	1.75
20	**143**	**1.4**	67.53	**BG20Z-../D07LA4**	19	5000	-	24	119	1.7
17.5	**163**	**1.25**	78.60	"	"	5000	-	21	136	1.45
15.5	**184**	**1.1**	87.30	"	"	5000	-	19	150	1.35
14.5	**197**	**1.0**	94.27	"	"	5000	-	17.5	163	1.25
13	**220**	**0.91**	104.7	"	"	5000	-	15.5	184	1.1

P = 0.3 kW

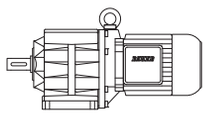

50 Hz			i	Type	m	F_{RN}	F_{RV}	60 Hz		
n_2	M_2	f_B						n_2	M_2	f_B
1/min	Nm				kg	N	N	1/min	Nm	
12	**235**	**0.85**	112.8	**BG20Z-../D07LA4**	"	5000	-	14.5	197	1.0
29	**98**	**3.1**	47.11	**BG30-../D07LA4**	22	6000	-	34.5	83	3.6
26	**110**	**2.7**	52.44	"	"	6000	-	31	92	3.3
23.5	**121**	**2.5**	58.18	"	"	6000	-	28	102	2.9
22.5	**127**	**2.4**	60.79	"	"	6000	-	27	106	2.8
20.5	**139**	**2.2**	67.44	"	"	6000	-	24.5	116	2.6
18.5	**154**	**1.95**	73.51	**BG30Z-../D07LA4**	25	6000	-	22.5	127	2.4
17	**168**	**1.8**	81.55	"	"	6000	-	20	143	2.1
16	**179**	**1.7**	86.13	"	"	6000	-	19	150	2.0
14.5	**197**	**1.5**	95.55	"	"	6000	-	17	168	1.8
12.5	**225**	**1.35**	109.6	"	"	6000	-	15	191	1.55
11.5	**245**	**1.2**	121.6	"	"	6000	-	13.5	210	1.45
11	**260**	**1.15**	128.5	"	"	6000	-	13	220	1.35
9.5	**300**	**1.0**	142.5	"	"	6000	-	11.5	245	1.2
9.0	**315**	**0.95**	151.5	"	"	6000	-	11	260	1.15
8.1	**350**	**0.86**	168.1	"	"	6000	-	9.7	295	1.0
20	**143**	**3.0**	67.74	**BG40Z-../D07LA4**	40	7000	-	24	119	3.6
18	**159**	**2.7**	75.19	"	"	7000	-	22	130	3.3
16.5	**173**	**2.5**	82.00	"	"	7000	-	20	143	3.0
15	**191**	**2.2**	91.02	"	"	7000	-	18	159	2.7
14	**200**	**2.1**	96.86	"	"	7000	-	17	168	2.5
13	**220**	**1.95**	107.5	"	"	7000	-	15.5	184	2.3
11.5	**245**	**1.75**	121.3	"	"	7000	-	13.5	210	2.0
10.5	**270**	**1.55**	134.6	"	"	7000	-	12.5	225	1.9
9.6	**295**	**1.45**	141.4	"	"	7000	-	11.5	245	1.75
8.7	**325**	**1.3**	156.9	"	"	7000	-	10.5	270	1.55
8.2	**345**	**1.25**	166.1	"	"	7000	-	9.8	290	1.45
7.4	**385**	**1.1**	184.4	"	"	7000	-	8.8	325	1.3
6.8	**420**	**1.0**	199.9	"	"	7000	-	8.2	345	1.25
6.1	**465**	**0.91**	221.9	"	"	7000	-	7.4	385	1.1
5.5	**520**	**0.82**	246.5	"	"	7000	-	6.6	430	0.99
4.7	**510**	**0.91**	288.6	**BG40G10-../D07LA4**	46	7000	-	5.7	410	1.15
14.5	**197**	**3.2**	95.58	**BG50Z-../D07LA4**	50	10000	-	17	168	3.8
13	**220**	**2.9**	106.0	"	"	10000	-	15.5	184	3.4
10.5	**270**	**2.3**	128.9	"	"	10000	-	13	220	2.9
9.5	**300**	**2.1**	142.9	"	"	10000	-	11.5	245	2.6
8.2	**345**	**1.85**	164.9	"	"	10000	-	9.9	285	2.2
7.4	**385**	**1.65**	182.8	"	"	10000	-	8.9	320	1.95
6.6	**430**	**1.45**	204.7	"	"	10000	-	8.0	355	1.75
6.0	**475**	**1.35**	226.9	"	"	10000	-	7.2	395	1.6
5.3	**540**	**1.15**	258.6	"	"	10000	-	6.3	450	1.4
4.8	**590**	**1.05**	286.7	"	"	10000	-	5.7	500	1.25
3.9	**630**	**1.1**	351.7	**BG50G10-../D07LA4**	54	10000	-	4.7	510	1.35
3.1	**810**	**0.85**	446.5	"	"	10000	-	3.7	660	1.05
4.9	**465**	**2.8**	276.2	**BG60G20-../D07LA4**	102	16000	-	5.9	365	3.6
4.5	**500**	**2.6**	306.1	"	"	16000	-	5.3	410	3.2
4.1	**550**	**2.4**	334.3	"	"	16000	-	4.9	440	3.0
3.7	**610**	**2.1**	370.5	"	"	16000	-	4.4	495	2.6
3.1	**750**	**1.75**	437.3	"	"	16000	-	3.8	580	2.2
2.7	**910**	**1.45**	504.9	"	"	16000	-	3.3	710	1.85
2.5	**980**	**1.35**	559.5	"	"	16000	-	2.9	820	1.6
2.1	**1190**	**1.1**	651.3	"	"	16000	-	2.5	980	1.35
1.7	**1480**	**0.88**	804.5	"	"	16000	-	2.1	1160	1.1
1.6	**1560**	**0.83**	891.5	"	"	16000	-	1.9	1280	1.0
2.8	**870**	**2.9**	495.9	**BG70G20-../D07LA4**	132	20000	-	3.3	720	3.5
2.4	**1040**	**2.4**	577.3	"	"	20000	-	2.9	840	3.0
2.1	**1190**	**2.1**	665.8	"	"	20000	-	2.5	970	2.6
1.8	**1390**	**1.8**	790.2	"	"	20000	-	2.1	1160	2.2
1.6	**1580**	**1.6**	877.6	"	"	20000	-	1.9	1300	1.9
1.4	**1820**	**1.35**	1035	"	"	20000	-	1.6	1570	1.6
1.2	**2150**	**1.15**	1193	"	"	20000	-	1.4	1810	1.4
1.0	**2600**	**0.96**	1389	"	"	20000	-	1.2	2100	1.2

BG-series helical-geared motors

Selection helical-geared motors DHE - IE2

P = 0.37 kW

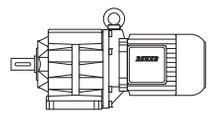

50 Hz			i	Type	m	F_{RN}	F_{RV}	60 Hz		
n_2	M_2	f_B						n_2	M_2	f_B
1/min	Nm				kg	N	N	1/min	Nm	
520	**6.7**	**1.35**	2.64	**BG05-../D07LA4**	11	420	-	620	5.6	1.6
400	**8.8**	**1.15**	3.38	"	"	460	-	480	7.3	1.35
295	**11.9**	**1.0**	4.59	"	"	490	-	355	9.9	1.2
250	**14.1**	**0.99**	5.46	"	"	490	-	300	11.7	1.2
205	**17.2**	**0.93**	6.60	"	"	510	-	250	14.1	1.15
174	**20**	**0.9**	7.80	"	"	530	-	210	16.8	1.05
166	**21**	**0.86**	8.15	"	"	510	-	199	17.7	1.0
159	**22**	**0.86**	8.51	"	"	550	-	191	18.5	1.05
360	**9.8**	**2.0**	3.78	**BG06-../D07LA4**	12	520	-	430	8.2	2.4
300	**11.7**	**1.9**	4.54	"	"	530	-	360	9.8	2.2
230	**15.3**	**1.55**	5.96	"	"	570	-	275	12.8	1.9
193	**18.3**	**1.4**	7.01	"	"	580	-	235	15	1.75
161	**21.5**	**1.3**	8.39	"	"	600	-	194	18.2	1.55
144	**24.5**	**1.2**	9.38	"	"	640	-	173	20	1.5
132	**26.5**	**1.15**	10.24	"	"	640	-	159	22	1.4
120	**29**	**1.1**	11.28	"	"	670	-	144	24.5	1.3
110	**32**	**1.05**	12.30	"	"	670	-	132	26.5	1.25
105	**33.5**	**0.99**	12.98	"	"	600	-	125	28	1.2
92	**38**	**0.89**	14.78	"	"	730	-	110	32	1.05
84	**42**	**0.83**	16.13	"	"	740	-	101	34.5	1.0
78	**45**	**0.84**	17.40	"	"	760	-	94	37.5	1.0
72	**49**	**0.82**	18.98	"	"	770	-	86	41	0.98
103	**34**	**3.2**	13.21	**BG10-../D07LA4**	15	1070	1490	123	28.5	3.9
93	**37.5**	**3.0**	14.58	"	"	1100	1540	112	31.5	3.6
84	**42**	**2.8**	16.15	"	"	1140	1590	101	34.5	3.4
73	**48**	**2.5**	18.51	"	"	1210	1690	88	40	3.0
66	**53**	**2.3**	20.51	"	"	1290	1800	79	44.5	2.7
62	**56**	**2.1**	22.04	"	"	1330	1860	74	47.5	2.5
56	**63**	**1.9**	24.42	"	"	1410	1970	67	52	2.3
52	**67**	**1.8**	26.26	"	"	1460	2000	62	56	2.1
46.5	**75**	**1.6**	29.09	"	"	1540	2150	56	63	1.9
43	**82**	**1.45**	31.52	"	"	1600	2200	52	67	1.8
39	**90**	**1.35**	34.92	"	"	1690	2350	46.5	75	1.6
34.5	**102**	**1.2**	39.70	"	"	1780	2450	41	86	1.4
31	**113**	**1.05**	43.99	"	"	1880	2600	37	95	1.25
29.5	**119**	**1.0**	46.55	"	"	1920	2650	35	100	1.2
26.5	**133**	**0.9**	51.57	"	"	2000	2800	31.5	112	1.05
23.5	**150**	**0.8**	57.48	"	"	2000	2800	28.5	123	0.98
50	**70**	**2.1**	27.08	**BG15-../D07LA4**	15	3000	6000	60	58	2.6
45	**78**	**1.9**	30.08	"	"	3000	6000	54	65	2.3
39.5	**89**	**1.7**	34.20	"	"	3000	6000	47.5	74	2.0
36	**98**	**1.55**	37.90	"	"	3000	6000	43	82	1.85
53	**66**	**3.0**	25.79	**BG20-../D07LA4**	18	3700	-	63	56	3.6
48.5	**72**	**2.8**	27.85	"	"	3800	-	59	59	3.4
44	**80**	**2.5**	30.94	"	"	4000	-	53	66	3.0
41	**86**	**2.3**	33.33	"	"	4100	-	49	72	2.8
36.5	**96**	**2.1**	37.02	"	"	4300	-	44	80	2.5
32.5	**108**	**1.85**	41.76	"	"	4500	-	39	90	2.2
29.5	**119**	**1.7**	46.38	"	"	4700	-	35	100	2.0
28.5	**123**	**1.65**	47.92	"	"	4750	-	34	103	1.95
25.5	**138**	**1.45**	53.22	"	"	4950	-	30.5	115	1.75
23	**153**	**1.3**	59.07	"	"	5000	-	27.5	128	1.55
21	**168**	**1.2**	65.62	"	"	5000	-	25	141	1.4
20	**176**	**1.15**	67.53	**BG20Z-../D07LA4**	19	5000	-	24	147	1.35
17.5	**200**	**1.0**	78.60	"	"	5000	-	21	168	1.2
15.5	**225**	**0.89**	87.30	"	"	5000	-	19	185	1.1
14.5	**240**	**0.83**	94.27	"	"	5000	-	17.5	200	1.0
38.5	**91**	**3.3**	35.17	**BG30-../D07LA4**	22	5500	-	46.5	75	4.0
35	**100**	**3.0**	39.02	"	"	5800	-	42	84	3.6
32	**110**	**2.7**	42.46	"	"	5900	-	38.5	91	3.3

P = 0.37 kW

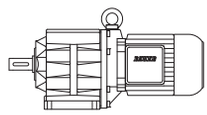

50 Hz			i	Type	m	F_{RN}	F_{RV}	60 Hz		
n_2	M_2	f_B						n_2	M_2	f_B
1/min	Nm				kg	N	N	1/min	Nm	
29	**121**	**2.5**	47.11	**BG30-../D07LA4**	"	6000	-	34.5	102	2.9
26	**135**	**2.2**	52.44	"	"	6000	-	31	113	2.7
23.5	**150**	**2.0**	58.18	"	"	6000	-	28	126	2.4
22.5	**157**	**1.9**	60.79	"	"	6000	-	27	130	2.3
20.5	**172**	**1.75**	67.44	"	"	6000	-	24.5	144	2.1
18.5	**191**	**1.55**	73.51	**BG30Z-../D07LA4**	25	6000	-	22.5	157	1.9
17	**205**	**1.45**	81.55	"	"	6000	-	20	176	1.7
16	**220**	**1.35**	86.13	"	"	6000	-	19	185	1.6
14.5	**240**	**1.25**	95.55	"	"	6000	-	17	205	1.45
12.5	**280**	**1.05**	109.6	"	"	6000	-	15	235	1.3
11.5	**305**	**0.98**	121.6	"	"	6000	-	13.5	260	1.15
11	**320**	**0.94**	128.5	"	"	6000	-	13	270	1.1
9.5	**370**	**0.81**	142.5	"	"	6000	-	11.5	305	0.98
20	**176**	**2.4**	67.74	**BG40Z-../D07LA4**	40	7000	-	24	147	2.9
18	**196**	**2.2**	75.19	"	"	7000	-	22	160	2.7
16.5	**210**	**2.0**	82.00	"	"	7000	-	20	176	2.4
15	**235**	**1.8**	91.02	"	"	7000	-	18	196	2.2
14	**250**	**1.7**	96.86	"	"	7000	-	17	205	2.1
13	**270**	**1.55**	107.5	"	"	7000	-	15.5	225	1.9
11.5	**305**	**1.4**	121.3	"	"	7000	-	13.5	260	1.65
10.5	**335**	**1.25**	134.6	"	"	7000	-	12.5	280	1.5
9.6	**365**	**1.15**	141.4	"	"	7000	-	11.5	305	1.4
8.7	**405**	**1.05**	156.9	"	"	7000	-	10.5	335	1.25
8.2	**430**	**0.99**	166.1	"	"	7000	-	9.8	360	1.2
7.4	**475**	**0.89**	184.4	"	"	7000	-	8.8	400	1.05
6.8	**510**	**0.83**	199.9	"	"	7000	-	8.2	430	0.99
17	**205**	**3.1**	79.78	**BG50Z-../D07LA4**	50	10000	-	20.5	172	3.7
14.5	**240**	**2.6**	95.58	"	"	10000	-	17	205	3.1
13	**270**	**2.3**	106.0	"	"	10000	-	15.5	225	2.8
10.5	**335**	**1.9**	128.9	"	"	10000	-	13	270	2.3
9.5	**370**	**1.7**	142.9	"	"	10000	-	11.5	305	2.1
8.2	**430**	**1.45**	164.9	"	"	10000	-	9.9	355	1.75
7.4	**475**	**1.35**	182.8	"	"	10000	-	8.9	395	1.6
6.6	**530**	**1.2**	204.7	"	"	10000	-	8.0	440	1.45
6.0	**580**	**1.1**	226.9	"	"	10000	-	7.2	490	1.3
5.3	**660**	**0.95**	258.6	"	"	10000	-	6.3	560	1.15
4.8	**730**	**0.86**	286.7	"	"	10000	-	5.7	610	1.05
3.9	**800**	**0.86**	351.7	**BG50G10-../D07LA4**	54	10000	-	4.7	650	1.05
4.9	**600**	**2.2**	276.2	**BG60G20-../D07LA4**	102	16000	-	5.9	480	2.7
4.5	**650**	**2.0**	306.1	"	"	16000	-	5.3	530	2.5
4.1	**720**	**1.8**	334.3	"	"	16000	-	4.9	580	2.2
3.7	**790**	**1.65**	370.5	"	"	16000	-	4.4	640	2.0
3.1	**970**	**1.35**	437.3	"	"	16000	-	3.8	760	1.7
2.7	**1160**	**1.1**	504.9	"	"	16000	-	3.3	920	1.4
2.5	**1240**	**1.05**	559.5	"	"	16000	-	2.9	1050	1.25
2.1	**1510**	**0.86**	651.3	"	"	16000	-	2.5	1240	1.05
3.5	**860**	**2.9**	387.6	**BG70G20-../D07LA4**	132	20000	-	4.2	690	3.6
3.3	**940**	**2.7**	417.8	"	"	20000	-	3.9	780	3.2
2.8	**1110**	**2.3**	495.9	"	"	20000	-	3.3	920	2.7
2.4	**1320**	**1.9**	577.3	"	"	20000	-	2.9	1070	2.3
2.1	**1510**	**1.65**	665.8	"	"	20000	-	2.5	1240	2.0
1.8	**1760**	**1.4**	790.2	"	"	20000	-	2.1	1480	1.7
1.6	**2000**	**1.25**	877.6	"	"	20000	-	1.9	1650	1.5
1.4	**2300**	**1.1**	1035	"	"	20000	-	1.6	1980	1.25
1.2	**2700**	**0.93**	1193	"	"	20000	-	1.4	2250	1.1

BG-series helical-geared motors

Selection helical-geared motors DHE - IE2

P = 0.55 kW

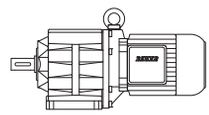

50 Hz			i	Type	m	F_{RN}	F_{RV}	60 Hz		
n_2	M_2	f_B						n_2	M_2	f_B
1/min	Nm				kg	N	N	1/min	Nm	
500	**10.5**	**1.7**	2.82	**BG06-../D08MA4**	16	470	-	600	8.7	2.1
375	**14**	**1.45**	3.78	"	"	520	-	445	11.8	1.7
310	**16.9**	**1.3**	4.54	"	"	530	-	375	14	1.55
235	**22**	**1.1**	5.96	"	"	570	-	285	18.4	1.3
200	**26**	**1.0**	7.01	"	"	580	-	240	21.5	1.2
167	**31**	**0.9**	8.39	"	"	600	-	205	25.5	1.1
150	**35**	**0.86**	9.38	"	"	640	-	180	29	1.05
137	**38**	**0.82**	10.24	"	"	640	-	165	31.5	0.98
210	**25**	**3.2**	6.78	**BG10-../D08MA4**	16	660	920	250	21	3.9
174	**30**	**2.9**	8.07	"	"	660	920	210	25	3.5
151	**34.5**	**2.8**	9.33	"	"	950	1330	181	29	3.3
136	**38.5**	**2.6**	10.34	"	"	1000	1400	163	32	3.1
118	**44.5**	**2.4**	11.92	"	"	1030	1440	141	37	2.8
106	**49.5**	**2.2**	13.21	"	"	1070	1490	128	41	2.7
97	**54**	**2.1**	14.58	"	"	1100	1540	116	45	2.5
87	**60**	**1.95**	16.15	"	"	1140	1590	105	50	2.3
76	**69**	**1.75**	18.51	"	"	1210	1690	91	57	2.1
69	**76**	**1.6**	20.51	"	"	1290	1800	82	64	1.9
64	**82**	**1.45**	22.04	"	"	1330	1860	77	68	1.75
58	**90**	**1.35**	24.42	"	"	1410	1970	69	76	1.6
54	**97**	**1.25**	26.26	"	"	1460	2000	64	82	1.45
48.5	**108**	**1.1**	29.09	"	"	1540	2150	58	90	1.35
44.5	**118**	**1.0**	31.52	"	"	1600	2200	54	97	1.25
40.5	**129**	**0.93**	34.92	"	"	1690	2350	48.5	108	1.1
35.5	**147**	**0.82**	39.70	"	"	1780	2450	42.5	123	0.98
52	**101**	**1.5**	27.08	**BG15-../D08MA4**	16	3000	6000	63	83	1.8
47	**111**	**1.35**	30.08	"	"	3000	6000	56	93	1.6
41	**128**	**1.15**	34.20	"	"	3000	6000	49.5	106	1.4
37	**141**	**1.05**	37.90	"	"	3000	6000	44.5	118	1.25
96	**54**	**3.2**	14.67	**BG20-../D08MA4**	19	3050	-	115	45.5	3.8
90	**58**	**3.1**	15.58	"	"	3100	-	108	48.5	3.6
81	**64**	**2.9**	17.31	"	"	3200	-	98	53	3.5
71	**73**	**2.7**	19.95	"	"	3350	-	85	61	3.2
64	**82**	**2.4**	22.16	"	"	3500	-	76	69	2.9
61	**86**	**2.3**	23.22	"	"	3550	-	73	71	2.8
55	**95**	**2.1**	25.79	"	"	3700	-	66	79	2.5
51	**102**	**1.95**	27.85	"	"	3800	-	61	86	2.3
45.5	**115**	**1.75**	30.94	"	"	4000	-	55	95	2.1
42.5	**123**	**1.65**	33.33	"	"	4100	-	51	102	1.95
38	**138**	**1.45**	37.02	"	"	4300	-	45.5	115	1.75
34	**154**	**1.3**	41.76	"	"	4500	-	40.5	129	1.55
30.5	**172**	**1.15**	46.38	"	"	4700	-	36.5	143	1.4
29.5	**178**	**1.1**	47.92	"	"	4750	-	35.5	147	1.35
26.5	**198**	**1.0**	53.22	"	"	4950	-	32	164	1.2
24	**215**	**0.93**	59.07	"	"	5000	-	28.5	184	1.1
21.5	**240**	**0.83**	65.62	"	"	5000	-	26	200	1.0
21	**250**	**0.8**	67.53	**BG20Z-../D08MA4**	20	5000	-	25	210	0.95
56	**93**	**3.2**	25.45	**BG30-../D08MA4**	23	4850	-	67	78	3.8
50	**105**	**2.9**	28.24	"	"	5100	-	60	87	3.4
47	**111**	**2.7**	29.83	"	"	5200	-	57	92	3.3
42.5	**123**	**2.4**	33.09	"	"	5400	-	51	102	2.9
40	**131**	**2.3**	35.17	"	"	5500	-	48	109	2.8
36	**145**	**2.1**	39.02	"	"	5800	-	43.5	120	2.5
33	**159**	**1.9**	42.46	"	"	5900	-	40	131	2.3
30	**175**	**1.7**	47.11	"	"	6000	-	36	145	2.1
27	**194**	**1.55**	52.44	"	"	6000	-	32.5	161	1.85
24.5	**210**	**1.45**	58.18	"	"	6000	-	29	181	1.65
23.5	**220**	**1.35**	60.79	"	"	6000	-	28	187	1.6
21	**250**	**1.2**	67.44	"	"	6000	-	25	210	1.45
19.5	**265**	**1.15**	73.51	**BG30Z-../D08MA4**	26	6000	-	23	225	1.35
17.5	**300**	**1.0**	81.55	"	"	6000	-	21	250	1.2
16.5	**315**	**0.95**	86.13	"	"	6000	-	20	260	1.15
15	**350**	**0.86**	95.55	"	"	6000	-	18	290	1.05

P = 0.55 kW

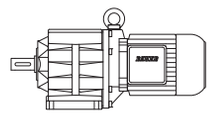

50 Hz			i	Type	m	F_{RN}	F_{RV}	60 Hz		
n_2	M_2	f_B						n_2	M_2	f_B
1/min	Nm				kg	N	N	1/min	Nm	
41	**128**	**3.3**	34.20	**BG40-../D08MA4**	38	7000	-	49.5	106	4.0
37	**141**	**3.0**	37.96	"	"	7000	-	44.5	118	3.6
35	**150**	**2.8**	40.19	"	"	7000	-	42	125	3.4
31.5	**166**	**2.6**	44.62	"	"	7000	-	38	138	3.1
29	**181**	**2.3**	48.36	"	"	7000	-	35	150	2.8
26.5	**198**	**2.1**	53.69	"	"	7000	-	31.5	166	2.6
23.5	**220**	**1.95**	59.64	"	"	7000	-	28.5	184	2.3
21.5	**240**	**1.75**	66.20	"	"	7000	-	25.5	205	2.1
21	**250**	**1.7**	67.74	**BG40Z-../D08MA4**	42	7000	-	25	210	2.0
19	**275**	**1.55**	75.19	"	"	7000	-	22.5	230	1.85
17.5	**300**	**1.4**	82.00	"	"	7000	-	20.5	255	1.65
15.5	**335**	**1.25**	91.02	"	"	7000	-	18.5	280	1.5
14.5	**360**	**1.2**	96.86	"	"	7000	-	17.5	300	1.4
13.5	**385**	**1.1**	107.5	"	"	7000	-	16	325	1.3
12	**435**	**0.98**	121.3	"	"	7000	-	14	375	1.15
10.5	**500**	**0.85**	134.6	"	"	7000	-	12.5	420	1.0
10	**520**	**0.82**	141.4	"	"	7000	-	12	435	0.98
27	**194**	**3.2**	52.12	**BG50-../D08MA4**	46	10000	-	32.5	161	3.9
24	**215**	**2.9**	59.42	"	"	10000	-	28.5	184	3.4
21.5	**240**	**2.6**	65.86	"	"	10000	-	26	200	3.2
19.5	**265**	**2.4**	71.97	**BG50Z-../D08MA4**	51	10000	-	23.5	220	2.9
18	**290**	**2.2**	79.78	"	"	10000	-	21.5	240	2.6
15	**350**	**1.8**	95.58	"	"	10000	-	18	290	2.2
13.5	**385**	**1.65**	106.0	"	"	10000	-	16	325	1.95
11	**475**	**1.35**	128.9	"	"	10000	-	13.5	385	1.65
9.8	**530**	**1.2**	142.9	"	"	10000	-	12	435	1.45
8.5	**610**	**1.05**	164.9	"	"	10000	-	10.5	500	1.25
7.7	**680**	**0.93**	182.8	"	"	10000	-	9.2	570	1.1
6.9	**760**	**0.83**	204.7	"	"	10000	-	8.3	630	1.0
14	**375**	**3.2**	101.0	**BG60Z-../D08MA4**	96	16000	-	17	305	3.9
12	**435**	**2.8**	119.2	"	"	16000	-	14.5	360	3.3
11	**475**	**2.5**	132.1	"	"	16000	-	13	400	3.0
8.9	**590**	**2.0**	158.0	"	"	16000	-	11	475	2.5
8.0	**650**	**1.85**	175.1	"	"	16000	-	9.6	540	2.2
6.9	**760**	**1.6**	204.6	"	"	16000	-	8.3	630	1.9
6.2	**840**	**1.45**	226.7	"	"	16000	-	7.5	700	1.7
5.7	**920**	**1.3**	247.7	"	"	16000	-	6.8	770	1.55
5.2	**1010**	**1.2**	274.5	"	"	16000	-	6.2	840	1.45
5.1	**910**	**1.45**	276.2	**BG60G20-../D08MA4**	103	16000	-	6.1	740	1.75
4.6	**1010**	**1.3**	306.1	"	"	16000	-	5.5	820	1.6
4.2	**1110**	**1.15**	334.3	"	"	16000	-	5.1	880	1.5
3.8	**1220**	**1.05**	370.5	"	"	16000	-	4.6	980	1.35
3.3	**1420**	**0.92**	437.3	"	"	16000	-	3.9	1180	1.1
7.3	**710**	**3.2**	194.4	**BG70Z-../D08MA4**	136	20000	-	8.7	600	3.8
6.7	**780**	**2.9**	210.5	"	"	20000	-	8.0	650	3.5
5.7	**920**	**2.5**	249.8	"	"	20000	-	6.8	770	3.0
5.5	**840**	**3.0**	255.5	**BG70G20-../D08MA4**	133	20000	-	6.6	680	3.7
5.1	**910**	**2.7**	276.7	"	"	20000	-	6.1	740	3.4
4.3	**1080**	**2.3**	328.4	"	"	20000	-	5.2	870	2.9
3.7	**1270**	**1.95**	387.6	"	"	20000	-	4.4	1040	2.4
3.4	**1420**	**1.75**	417.8	"	"	20000	-	4.1	1150	2.2
2.9	**1660**	**1.5**	495.9	"	"	20000	-	3.4	1390	1.8
2.5	**1950**	**1.3**	577.3	"	"	20000	-	3.0	1600	1.55
2.2	**2200**	**1.15**	665.8	"	"	20000	-	2.6	1850	1.35
1.8	**2700**	**0.93**	790.2	"	"	20000	-	2.2	2150	1.15
1.6	**3050**	**0.82**	877.6	"	"	20000	-	2.0	2400	1.05
2.9	**1430**	**3.2**	484.3	**BG80G40-../D08MA4**	215	26000	-	3.5	1120	4.1
2.5	**1720**	**2.7**	572.0	"	"	26000	-	3.0	1370	3.4
2.2	**1900**	**2.4**	657.8	"	"	26000	-	2.6	1540	3.0
2.0	**2100**	**2.2**	730.3	"	"	26000	-	2.4	1690	2.7
1.8	**2350**	**1.95**	817.4	"	"	26000	-	2.1	1970	2.3
1.6	**2700**	**1.7**	907.6	"	"	26000	-	1.9	2200	2.1

BG-series helical-geared motors

Selection helical-geared motors DHE - IE2

P = 0.55 kW

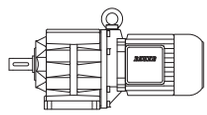

50 Hz			i	Type	m	F_{RN}	F_{RV}	60 Hz		
n_2	M_2	f_B						n_2	M_2	f_B
1/min	Nm				kg	N	N	1/min	Nm	
1.4	**3200**	**1.45**	1042	**BG80G40-../D08MA4**	"	26000	-	1.7	2500	1.85
1.2	**3800**	**1.2**	1261	"	"	26000	-	1.4	3200	1.45
1.0	**4700**	**0.98**	1400	"	"	26000	-	1.2	3800	1.2
1.2	**3700**	**2.5**	1174	**BG90G50-../D08MA4**	324	65000	-	1.5	2800	3.3
1.1	**4100**	**2.2**	1301	"	"	65000	-	1.3	3350	2.7
0.9	**5100**	**1.8**	1583	"	"	65000	-	1.1	4100	2.2
0.8	**5800**	**1.6**	1756	"	"	65000	-	1.0	4550	2.0
0.7	**6800**	**1.35**	2026	"	"	65000	-	0.85	5500	1.65
0.6	**8000**	**1.15**	2514	"	"	65000	-	0.7	6800	1.35
0.55	**8800**	**1.05**	2786	"	"	65000	-	0.65	7400	1.25
0.65	**6000**	**3.1**	2154	**BG100G50-../D08MA4**	512	90000	-	0.8	4500	4.1
0.55	**7100**	**2.6**	2656	"	"	90000	-	0.65	5700	3.2
0.48	**8600**	**2.2**	2952	"	"	90000	-	0.6	6500	2.8
0.43	**9700**	**1.9**	3286	"	"	90000	-	0.55	7000	2.6
0.39	**10900**	**1.7**	3644	"	"	90000	-	0.47	8600	2.2
0.33	**13400**	**1.4**	4366	"	"	90000	-	0.39	10900	1.7
0.29	**15600**	**1.2**	4839	"	"	90000	-	0.35	12500	1.5

P = 0.75 kW

50 Hz			i	Type	m	F_{RN}	F_{RV}	60 Hz		
n_2	M_2	f_B						n_2	M_2	f_B
1/min	Nm				kg	N	N	1/min	Nm	
510	**14**	**1.3**	2.82	**BG06-../DHE08XA4**	19	470	-	610	11.7	1.55
380	**18.8**	**1.05**	3.78	"	"	520	-	455	15.7	1.25
315	**22.5**	**0.98**	4.54	"	"	530	-	380	18.8	1.15
240	**29.5**	**0.81**	5.96	"	"	570	-	290	24.5	0.98
330	**21.5**	**3.2**	4.36	**BG10-../DHE08XA4**	19	650	910	395	18.1	3.8
270	**26.5**	**2.8**	5.34	"	"	620	910	325	22	3.4
210	**34**	**2.4**	6.78	"	"	660	920	255	28	2.9
176	**40.5**	**2.2**	8.07	"	"	660	920	215	33	2.7
153	**46.5**	**2.1**	9.33	"	"	950	1330	184	38.5	2.5
138	**51**	**1.95**	10.34	"	"	1000	1400	166	43	2.3
120	**59**	**1.8**	11.92	"	"	1030	1440	144	49.5	2.1
108	**66**	**1.65**	13.21	"	"	1070	1490	130	55	2.0
98	**73**	**1.55**	14.58	"	"	1100	1540	118	60	1.9
88	**81**	**1.45**	16.15	"	"	1140	1590	106	67	1.75
77	**93**	**1.3**	18.51	"	"	1210	1690	93	77	1.55
70	**102**	**1.2**	20.51	"	"	1290	1800	84	85	1.4
65	**110**	**1.1**	22.04	"	"	1330	1860	78	91	1.3
59	**121**	**0.99**	24.42	"	"	1410	1970	71	100	1.2
55	**130**	**0.92**	26.26	"	"	1460	2000	66	108	1.1
49	**146**	**0.82**	29.09	"	"	1540	2150	59	121	0.99
53	**135**	**1.1**	27.08	**BG15-../DHE08XA4**	19	3000	6000	64	111	1.35
47.5	**150**	**1.0**	30.08	"	"	3000	6000	57	125	1.2
42	**170**	**0.88**	34.20	"	"	3000	6000	50	143	1.05
172	**41.5**	**2.9**	8.29	**BG20-../DHE08XA4**	22	2250	-	210	34	3.6
160	**44.5**	**3.2**	8.91	"	"	2600	-	192	37	3.9
148	**48**	**2.5**	9.65	"	"	2250	-	178	40	3.1
135	**53**	**2.9**	10.54	"	"	2700	-	163	43.5	3.5
122	**58**	**2.7**	11.71	"	"	2800	-	147	48.5	3.3
108	**66**	**2.5**	13.21	"	"	2900	-	130	55	3.0
97	**73**	**2.4**	14.67	"	"	3050	-	117	61	2.8
92	**77**	**2.3**	15.58	"	"	3100	-	110	65	2.7
83	**86**	**2.1**	17.31	"	"	3200	-	99	72	2.5
72	**99**	**1.95**	19.95	"	"	3350	-	86	83	2.3
65	**110**	**1.8**	22.16	"	"	3500	-	78	91	2.2
62	**115**	**1.75**	23.22	"	"	3550	-	74	96	2.1
56	**127**	**1.55**	25.79	"	"	3700	-	67	106	1.9

P = 0.75 kW

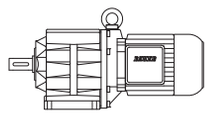

50 Hz			i	Type	m	F_{RN}	F_{RV}	60 Hz		
n_2	M_2	f_B						n_2	M_2	f_B
1/min	Nm				kg	N	N	1/min	Nm	
51	**140**	**1.45**	27.85	**BG20-../DHE08XA4**	"	3800	-	62	115	1.75
46	**155**	**1.3**	30.94	"	"	4000	-	56	127	1.55
43	**166**	**1.2**	33.33	"	"	4100	-	52	137	1.45
38.5	**186**	**1.1**	37.02	"	"	4300	-	46.5	154	1.3
34.5	**205**	**0.98**	41.76	"	"	4500	-	41	174	1.15
31	**230**	**0.87**	46.38	"	"	4700	-	37	193	1.05
30	**235**	**0.85**	47.92	"	"	4750	-	36	198	1.0
76	**94**	**3.2**	18.93	**BG30-../DHE08XA4**	26	4100	-	91	78	3.8
72	**99**	**3.0**	19.99	"	"	4200	-	86	83	3.6
65	**110**	**2.7**	22.18	"	"	4600	-	78	91	3.3
56	**127**	**2.4**	25.45	"	"	4850	-	68	105	2.9
51	**140**	**2.1**	28.24	"	"	5100	-	61	117	2.6
48	**149**	**2.0**	29.83	"	"	5200	-	58	123	2.4
43	**166**	**1.8**	33.09	"	"	5400	-	52	137	2.2
40.5	**176**	**1.7**	35.17	"	"	5500	-	49	146	2.1
36.5	**196**	**1.55**	39.02	"	"	5800	-	44	162	1.85
33.5	**210**	**1.45**	42.46	"	"	5900	-	40.5	176	1.7
30.5	**230**	**1.3**	47.11	"	"	6000	-	36.5	196	1.55
27.5	**260**	**1.15**	52.44	"	"	6000	-	33	215	1.4
24.5	**290**	**1.05**	58.18	"	"	6000	-	29.5	240	1.25
23.5	**300**	**1.0**	60.79	"	"	6000	-	28.5	250	1.2
21.5	**330**	**0.91**	67.44	"	"	6000	-	25.5	280	1.05
19.5	**365**	**0.82**	73.51	**BG30Z-../DHE08XA4**	28	6000	-	23.5	300	1.0
55	**130**	**3.3**	26.01	**BG40-../DHE08XA4**	41	6500	-	66	108	3.9
48.5	**147**	**2.9**	29.34	"	"	6800	-	59	121	3.5
44	**162**	**2.6**	32.57	"	"	7000	-	53	135	3.1
42	**170**	**2.5**	34.20	"	"	7000	-	50	143	3.0
37.5	**191**	**2.2**	37.96	"	"	7000	-	45.5	157	2.7
35.5	**200**	**2.1**	40.19	"	"	7000	-	43	166	2.6
32	**220**	**1.95**	44.62	"	"	7000	-	38.5	186	2.3
29.5	**240**	**1.75**	48.36	"	"	7000	-	35.5	200	2.1
26.5	**270**	**1.55**	53.69	"	"	7000	-	32	220	1.95
24	**295**	**1.45**	59.64	"	"	7000	-	29	245	1.75
21.5	**330**	**1.3**	66.20	"	"	7000	-	26	275	1.55
21	**340**	**1.25**	67.74	**BG40Z-../DHE08XA4**	44	7000	-	25.5	280	1.5
19	**375**	**1.15**	75.19	"	"	7000	-	23	310	1.35
17.5	**405**	**1.05**	82.00	"	"	7000	-	21	340	1.25
16	**445**	**0.96**	91.02	"	"	7000	-	19	375	1.15
15	**475**	**0.89**	96.86	"	"	7000	-	18	395	1.1
13.5	**530**	**0.8**	107.5	"	"	7000	-	16	445	0.96
37.5	**191**	**3.3**	37.89	**BG50-../DHE08XA4**	48	10000	-	45.5	157	4.0
34	**210**	**3.0**	42.00	"	"	10000	-	41	174	3.6
30.5	**230**	**2.7**	47.02	"	"	10000	-	36.5	196	3.2
27.5	**260**	**2.4**	52.12	"	"	10000	-	33	215	2.9
24	**295**	**2.1**	59.42	"	"	10000	-	29	245	2.6
22	**325**	**1.95**	65.86	"	"	10000	-	26	275	2.3
20	**355**	**1.75**	71.97	**BG50Z-../DHE08XA4**	53	10000	-	24	295	2.1
18	**395**	**1.6**	79.78	"	"	10000	-	21.5	330	1.9
15	**475**	**1.35**	95.58	"	"	10000	-	18	395	1.6
13.5	**530**	**1.2**	106.0	"	"	10000	-	16.5	430	1.45
11.5	**620**	**1.0**	128.9	"	"	10000	-	13.5	530	1.2
10	**710**	**0.89**	142.9	"	"	10000	-	12	590	1.05
19	**375**	**3.2**	75.71	**BG60Z-../DHE08XA4**	98	16000	-	23	310	3.9
16	**445**	**2.7**	91.09	"	"	16000	-	19	375	3.2
14.5	**490**	**2.4**	101.0	"	"	16000	-	17	420	2.9
12	**590**	**2.0**	119.2	"	"	16000	-	14.5	490	2.4
11	**650**	**1.85**	132.1	"	"	16000	-	13	550	2.2
9.0	**790**	**1.5**	158.0	"	"	16000	-	11	650	1.85
8.2	**870**	**1.4**	175.1	"	"	16000	-	9.8	730	1.65
7.0	**1020**	**1.2**	204.6	"	"	16000	-	8.4	850	1.4
6.3	**1130**	**1.05**	226.7	"	"	16000	-	7.6	940	1.3
5.8	**1230**	**0.98**	247.7	"	"	16000	-	7.0	1020	1.2
5.2	**1370**	**0.88**	274.5	"	"	16000	-	6.3	1130	1.05

BG-series helical-geared motors

Selection helical-geared motors DHE - IE2

P = 0.75 kW

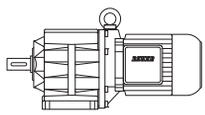

50 Hz			i	Type	m	F_{RN}	F_{RV}	60 Hz		
n_2	M_2	f_B						n_2	M_2	f_B
1/min	Nm				kg	N	N	1/min	Nm	
4.7	**1390**	**0.94**	306.1	**BG60G20-../DHE08XA4**	106	16000	-	5.6	1150	1.15
4.3	**1520**	**0.86**	334.3	"	"	16000	-	5.2	1230	1.05
9.7	**730**	**3.2**	147.2	**BG70Z-../DHE08XA4**	138	20000	-	12	590	3.9
8.7	**820**	**2.8**	163.8	"	"	20000	-	10.5	680	3.4
7.4	**960**	**2.4**	194.4	"	"	20000	-	8.8	810	2.8
6.8	**1050**	**2.2**	210.5	"	"	20000	-	8.2	870	2.6
5.7	**1250**	**1.85**	249.8	"	"	20000	-	6.9	1030	2.2
5.6	**1170**	**2.1**	255.5	**BG70G20-../DHE08XA4**	136	20000	-	6.7	960	2.6
5.2	**1260**	**2.0**	276.7	"	"	20000	-	6.2	1030	2.4
4.4	**1490**	**1.7**	328.4	"	"	20000	-	5.3	1210	2.1
3.7	**1780**	**1.4**	387.6	"	"	20000	-	4.5	1440	1.75
3.4	**1980**	**1.25**	417.8	"	"	20000	-	4.1	1620	1.55
2.9	**2300**	**1.1**	495.9	"	"	20000	-	3.5	1900	1.3
2.5	**2700**	**0.93**	577.3	"	"	20000	-	3.0	2200	1.15
2.2	**3050**	**0.82**	665.8	"	"	20000	-	2.6	2550	0.98
4.0	**1450**	**3.2**	360.0	**BG80G40-../DHE08XA4**	217	26000	-	4.8	1150	4.0
3.6	**1610**	**2.9**	399.8	"	"	26000	-	4.3	1290	3.6
3.3	**1830**	**2.5**	436.2	"	"	26000	-	4.0	1450	3.2
3.0	**2000**	**2.3**	484.3	"	"	26000	-	3.6	1610	2.9
2.5	**2450**	**1.9**	572.0	"	"	26000	-	3.0	2000	2.3
2.2	**2750**	**1.65**	657.8	"	"	26000	-	2.6	2250	2.0
2.0	**3050**	**1.5**	730.3	"	"	26000	-	2.4	2450	1.9
1.8	**3450**	**1.35**	817.4	"	"	26000	-	2.1	2850	1.6
1.6	**3900**	**1.2**	907.6	"	"	26000	-	1.9	3200	1.45
1.4	**4550**	**1.0**	1042	"	"	26000	-	1.7	3650	1.25
1.2	**5400**	**0.85**	1261	"	"	26000	-	1.4	4550	1.0
2.0	**2900**	**3.2**	714.2	**BG90G50-../DHE08XA4**	327	65000	-	2.4	2300	4.0
1.7	**3500**	**2.6**	883.7	"	"	65000	-	2.0	2900	3.2
1.3	**4800**	**1.9**	1174	"	"	65000	-	1.5	4100	2.2
1.1	**5800**	**1.6**	1301	"	"	65000	-	1.4	4400	2.1
0.9	**7200**	**1.3**	1583	"	"	65000	-	1.1	5800	1.6
0.85	**7700**	**1.2**	1756	"	"	65000	-	1.0	6400	1.45
0.75	**8800**	**1.05**	2026	"	"	65000	-	0.85	7700	1.2
1.0	**5700**	**3.2**	1444	**BG100G50-../DHE08XA4**	514	90000	-	1.2	4550	4.1
0.85	**6800**	**2.7**	1678	"	"	90000	-	1.1	4900	3.8
0.8	**7100**	**2.6**	1867	"	"	90000	-	0.95	5700	3.2
0.7	**8100**	**2.3**	2154	"	"	90000	-	0.8	6800	2.7
0.55	**10600**	**1.75**	2656	"	"	90000	-	0.65	8600	2.2
0.49	**12300**	**1.5**	2952	"	"	90000	-	0.6	9600	1.95
0.44	**13700**	**1.35**	3286	"	"	90000	-	0.55	10500	1.75
0.39	**15800**	**1.15**	3644	"	"	90000	-	0.47	12700	1.45

P = 1.1 kW

50 Hz			i	Type	m	F_{RN}	F_{RV}	60 Hz		
n_2	M_2	f_B						n_2	M_2	f_B
1/min	Nm				kg	N	N	1/min	Nm	
580	**18.1**	**3.1**	2.52	**BG10-../DHE09LA4**	26	560	790	700	15	3.7
425	**24.5**	**2.5**	3.42	"	"	630	880	510	20.5	3.0
335	**31**	**2.2**	4.36	"	"	650	910	400	26	2.6
270	**38.5**	**1.95**	5.34	"	"	620	910	330	31.5	2.4
215	**48.5**	**1.65**	6.78	"	"	660	920	260	40	2.0
179	**58**	**1.5**	8.07	"	"	660	920	220	47.5	1.85
155	**67**	**1.45**	9.33	"	"	950	1330	187	56	1.75
140	**75**	**1.3**	10.34	"	"	1000	1400	169	62	1.6
121	**86**	**1.2**	11.92	"	"	1030	1440	146	71	1.5
110	**95**	**1.15**	13.21	"	"	1070	1490	132	79	1.4
99	**106**	**1.1**	14.58	"	"	1100	1540	120	87	1.3
90	**116**	**1.0**	16.15	"	"	1140	1590	108	97	1.2
78	**134**	**0.9**	18.51	"	"	1210	1690	95	110	1.1
71	**147**	**0.82**	20.51	"	"	1290	1800	85	123	0.98

P = 1.1 kW

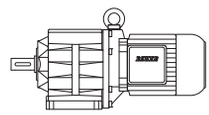

50 Hz			i	Type	m	F_{RN}	F_{RV}	60 Hz		
n_2	M_2	f_B						n_2	M_2	f_B
1/min	Nm				kg	N	N	1/min	Nm	
330	**31.5**	**3.3**	4.38	**BG20-../DHE09LA4**	28	1990	-	400	26	4.0
265	**39.5**	**2.9**	5.49	"	"	2100	-	320	32.5	3.5
225	**46.5**	**2.6**	6.48	"	"	2250	-	270	38.5	3.2
180	**58**	**2.4**	8.02	"	"	2500	-	220	47.5	2.9
174	**60**	**2.0**	8.29	"	"	2250	-	210	50	2.4
162	**64**	**2.2**	8.91	"	"	2600	-	196	53	2.7
150	**70**	**1.75**	9.65	"	"	2250	-	181	58	2.1
137	**76**	**2.0**	10.54	"	"	2700	-	166	63	2.4
123	**85**	**1.85**	11.71	"	"	2800	-	149	70	2.3
110	**95**	**1.75**	13.21	"	"	2900	-	132	79	2.1
99	**106**	**1.6**	14.67	"	"	3050	-	119	88	1.95
93	**112**	**1.6**	15.58	"	"	3100	-	112	93	1.9
84	**125**	**1.45**	17.31	"	"	3200	-	101	104	1.75
73	**143**	**1.35**	19.95	"	"	3350	-	88	119	1.65
65	**161**	**1.25**	22.16	"	"	3500	-	79	132	1.5
63	**166**	**1.2**	23.22	"	"	3550	-	75	140	1.45
56	**187**	**1.05**	25.79	"	"	3700	-	68	154	1.3
52	**200**	**1.0**	27.85	"	"	3800	-	63	166	1.2
47	**220**	**0.91**	30.94	"	"	4000	-	57	184	1.1
43.5	**240**	**0.83**	33.33	"	"	4100	-	53	198	1.0
122	**86**	**3.2**	11.82	**BG30-../DHE09LA4**	33	3200	-	148	70	3.9
105	**100**	**2.9**	13.77	"	"	3150	-	127	82	3.6
95	**110**	**2.7**	15.27	"	"	3450	-	114	92	3.3
85	**123**	**2.4**	17.06	"	"	3700	-	102	102	2.9
77	**136**	**2.2**	18.93	"	"	4100	-	92	114	2.6
73	**143**	**2.1**	19.99	"	"	4200	-	88	119	2.5
65	**161**	**1.85**	22.18	"	"	4600	-	79	132	2.3
57	**184**	**1.65**	25.45	"	"	4850	-	69	152	1.95
51	**205**	**1.45**	28.24	"	"	5100	-	62	169	1.8
48.5	**215**	**1.4**	29.83	"	"	5200	-	59	178	1.7
44	**235**	**1.3**	33.09	"	"	5400	-	53	198	1.5
41	**255**	**1.2**	35.17	"	"	5500	-	49.5	210	1.45
37	**280**	**1.05**	39.02	"	"	5800	-	45	230	1.3
34	**305**	**0.98**	42.46	"	"	5900	-	41	255	1.2
31	**335**	**0.9**	47.11	"	"	6000	-	37	280	1.05
80	**131**	**3.2**	18.19	**BG40-../DHE09LA4**	47	5600	-	96	109	3.9
73	**143**	**3.0**	19.84	"	"	5800	-	88	119	3.6
66	**159**	**2.7**	22.02	"	"	6000	-	80	131	3.2
62	**169**	**2.5**	23.43	"	"	6200	-	75	140	3.0
56	**187**	**2.3**	26.01	"	"	6500	-	67	156	2.7
49.5	**210**	**2.0**	29.34	"	"	6800	-	60	175	2.4
44.5	**235**	**1.8**	32.57	"	"	7000	-	54	194	2.2
42.5	**245**	**1.75**	34.20	"	"	7000	-	51	205	2.1
38	**275**	**1.55**	37.96	"	"	7000	-	46	225	1.9
36	**290**	**1.45**	40.19	"	"	7000	-	43.5	240	1.75
32.5	**320**	**1.35**	44.62	"	"	7000	-	39	265	1.6
30	**350**	**1.2**	48.36	"	"	7000	-	36	290	1.45
27	**385**	**1.1**	53.69	"	"	7000	-	32.5	320	1.35
24.5	**425**	**1.0**	59.64	"	"	7000	-	29.5	355	1.2
22	**475**	**0.89**	66.20	"	"	7000	-	26.5	395	1.1
21.5	**485**	**0.88**	67.74	**BG40Z-../DHE09LA4**	51	7000	-	26	400	1.05
19.5	**530**	**0.8**	75.19	"	"	7000	-	23.5	445	0.96
49	**210**	**3.0**	29.62	**BG50-../DHE09LA4**	55	8000	-	59	178	3.5
44	**235**	**2.7**	32.84	"	"	8700	-	53	198	3.2
38.5	**270**	**2.3**	37.89	"	"	10000	-	46	225	2.8
34.5	**300**	**2.1**	42.00	"	"	10000	-	41.5	250	2.5
31	**335**	**1.9**	47.02	"	"	10000	-	37.5	280	2.3
28	**375**	**1.7**	52.12	"	"	10000	-	33.5	310	2.0
24.5	**425**	**1.5**	59.42	"	"	10000	-	29.5	355	1.75
22	**475**	**1.35**	65.86	"	"	10000	-	26.5	395	1.6
20.5	**510**	**1.25**	71.97	**BG50Z-../DHE09LA4**	60	10000	-	24.5	425	1.5
18.5	**560**	**1.15**	79.78	"	"	10000	-	22	475	1.35
15.5	**670**	**0.94**	95.58	"	"	10000	-	18.5	560	1.15
14	**750**	**0.84**	106.0	"	"	10000	-	16.5	630	1.0

BG-series helical-geared motors

Selection helical-geared motors DHE - IE2

P = 1.1 kW

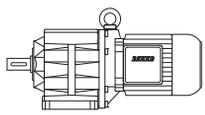

50 Hz			i	Type	m	F_{RN}	F_{RV}	60 Hz		
n_2	M_2	f_B						n_2	M_2	f_B
1/min	Nm				kg	N	N	1/min	Nm	
29	**360**	**3.3**	50.31	**BG60-../DHE09LA4**	86	16000	-	35	300	4.0
26	**400**	**3.0**	55.76	"	"	16000	-	31.5	330	3.6
24	**435**	**2.8**	60.90	"	"	16000	-	29	360	3.3
21.5	**485**	**2.5**	67.49	"	"	16000	-	26	400	3.0
19.5	**530**	**2.3**	75.71	**BG60Z-../DHE09LA4**	105	16000	-	23	455	2.6
16	**650**	**1.85**	91.09	"	"	16000	-	19.5	530	2.3
14.5	**720**	**1.65**	101.0	"	"	16000	-	17.5	600	2.0
12.5	**840**	**1.45**	119.2	"	"	16000	-	15	700	1.7
11	**950**	**1.25**	132.1	"	"	16000	-	13.5	770	1.55
9.2	**1140**	**1.05**	158.0	"	"	16000	-	11.5	910	1.3
8.3	**1260**	**0.95**	175.1	"	"	16000	-	10	1050	1.15
7.1	**1470**	**0.82**	204.6	"	"	16000	-	8.6	1220	0.98
13	**800**	**2.9**	113.6	**BG70Z-../DHE09LA4**	145	20000	-	15.5	670	3.4
12	**870**	**2.6**	124.0	"	"	20000	-	14.5	720	3.2
9.8	**1070**	**2.1**	147.2	"	"	20000	-	12	870	2.6
8.8	**1190**	**1.95**	163.8	"	"	20000	-	11	950	2.4
7.5	**1400**	**1.65**	194.4	"	"	20000	-	9.0	1160	2.0
6.9	**1520**	**1.5**	210.5	"	"	20000	-	8.3	1260	1.85
5.8	**1810**	**1.25**	249.8	"	"	20000	-	7.0	1500	1.55
5.7	**1730**	**1.45**	255.5	**BG70G20-../DHE09LA4**	142	20000	-	6.9	1410	1.75
5.3	**1860**	**1.35**	276.7	"	"	20000	-	6.3	1550	1.6
4.4	**2200**	**1.15**	328.4	"	"	20000	-	5.3	1840	1.35
3.8	**2600**	**0.96**	387.6	"	"	20000	-	4.5	2150	1.15
3.5	**2850**	**0.88**	417.8	"	"	20000	-	4.2	2350	1.05
7.8	**1340**	**3.1**	186.8	**BG80Z-../DHE09LA4**	213	26000	-	9.4	1110	3.8
7.0	**1500**	**2.8**	207.4	"	"	26000	-	8.4	1250	3.4
5.8	**1500**	**3.1**	252.3	**BG80G40-../DHE09LA4**	224	26000	-	6.9	1210	3.8
5.1	**1750**	**2.6**	282.8	"	"	26000	-	6.2	1380	3.3
4.6	**1940**	**2.4**	314.0	"	"	26000	-	5.6	1530	3.0
4.0	**2250**	**2.0**	360.0	"	"	26000	-	4.9	1800	2.6
3.7	**2450**	**1.9**	399.8	"	"	26000	-	4.4	2000	2.3
3.4	**2750**	**1.65**	436.2	"	"	26000	-	4.0	2250	2.0
3.0	**3100**	**1.5**	484.3	"	"	26000	-	3.6	2500	1.85
2.6	**3650**	**1.25**	572.0	"	"	26000	-	3.1	3000	1.55
2.2	**4250**	**1.1**	657.8	"	"	26000	-	2.7	3400	1.35
2.0	**4750**	**0.97**	730.3	"	"	26000	-	2.4	3850	1.2
1.8	**5300**	**0.87**	817.4	"	"	26000	-	2.2	4250	1.1
2.9	**3100**	**3.0**	504.7	**BG90G50-../DHE09LA4**	334	65000	-	3.5	2500	3.7
2.5	**3600**	**2.6**	588.8	"	"	65000	-	3.0	2900	3.2
2.3	**3950**	**2.3**	644.7	"	"	65000	-	2.7	3250	2.8
2.1	**4350**	**2.1**	714.2	"	"	65000	-	2.5	3550	2.6
1.7	**5500**	**1.65**	883.7	"	"	65000	-	2.0	4550	2.0
1.3	**7400**	**1.25**	1174	"	"	65000	-	1.5	6300	1.45
1.2	**8000**	**1.15**	1301	"	"	65000	-	1.4	6800	1.35
1.8	**5800**	**3.2**	845.1	**BG100Z-../DHE09LA4**	522	90000	-	2.1	5000	3.7
1.4	**6100**	**3.0**	1043	**BG100G50-../DHE09LA4**	521	90000	-	1.7	4750	3.9
1.2	**7100**	**2.6**	1204	"	"	90000	-	1.5	5300	3.5
1.0	**9100**	**2.0**	1444	"	"	90000	-	1.3	6700	2.8
0.9	**10000**	**1.85**	1678	"	"	90000	-	1.1	7900	2.3
0.8	**11300**	**1.65**	1867	"	"	90000	-	0.95	9200	2.0
0.7	**12900**	**1.45**	2154	"	"	90000	-	0.85	10300	1.8
0.55	**16700**	**1.1**	2656	"	"	90000	-	0.7	12600	1.45

P = 1.5 kW

50 Hz			i	Type	m	F_{RN}	F_{RV}	60 Hz		
n_2	M_2	f_B						n_2	M_2	f_B
1/min	Nm				kg	N	N	1/min	Nm	
580	**24.5**	**2.3**	2.52	**BG10-../DHE09XA4**	30	560	790	700	20	2.8
425	**33.5**	**1.85**	3.42	"	"	630	880	510	28	2.2
335	**42.5**	**1.6**	4.36	"	"	650	910	400	35.5	1.9

P = 1.5 kW

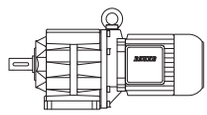

50 Hz			i	Type	m	F_{RN}	F_{RV}	60 Hz		
n_2	M_2	f_B						n_2	M_2	f_B
1/min	Nm				kg	N	N	1/min	Nm	
270	**53**	**1.4**	5.34	**BG10-../DHE09XA4**	"	620	910	330	43	1.75
215	**66**	**1.25**	6.78	"	"	660	920	260	55	1.45
179	**80**	**1.1**	8.07	"	"	660	920	220	65	1.35
155	**92**	**1.05**	9.33	"	"	950	1330	187	76	1.3
140	**102**	**0.97**	10.34	"	"	1000	1400	169	84	1.2
121	**118**	**0.89**	11.92	"	"	1030	1440	146	98	1.05
110	**130**	**0.85**	13.21	"	"	1070	1490	132	108	1.0
435	**32.5**	**2.8**	3.33	**BG20-../DHE09XA4**	32	1830	-	530	27	3.4
330	**43**	**2.4**	4.38	"	"	1990	-	400	35.5	2.9
265	**54**	**2.1**	5.49	"	"	2100	-	320	44.5	2.6
225	**63**	**1.95**	6.48	"	"	2250	-	270	53	2.3
180	**79**	**1.75**	8.02	"	"	2500	-	220	65	2.1
174	**82**	**1.5**	8.29	"	"	2250	-	210	68	1.8
162	**88**	**1.65**	8.91	"	"	2600	-	196	73	1.95
150	**95**	**1.3**	9.65	"	"	2250	-	181	79	1.55
137	**104**	**1.5**	10.54	"	"	2700	-	166	86	1.8
123	**116**	**1.35**	11.71	"	"	2800	-	149	96	1.65
110	**130**	**1.3**	13.21	"	"	2900	-	132	108	1.55
99	**144**	**1.2**	14.67	"	"	3050	-	119	120	1.45
93	**154**	**1.15**	15.58	"	"	3100	-	112	127	1.4
84	**170**	**1.1**	17.31	"	"	3200	-	101	141	1.3
73	**196**	**0.99**	19.95	"	"	3350	-	88	162	1.2
65	**220**	**0.91**	22.16	"	"	3500	-	79	181	1.1
63	**225**	**0.89**	23.22	"	"	3550	-	75	191	1.05
215	**66**	**3.3**	6.75	**BG30-../DHE09XA4**	37	1760	-	260	55	3.9
183	**78**	**2.8**	7.91	"	"	1760	-	220	65	3.3
168	**85**	**2.9**	8.60	"	"	2800	-	205	69	3.6
151	**94**	**2.7**	9.55	"	"	3000	-	183	78	3.3
136	**105**	**2.5**	10.65	"	"	2950	-	164	87	3.1
122	**117**	**2.3**	11.82	"	"	3200	-	148	96	2.9
105	**136**	**2.2**	13.77	"	"	3150	-	127	112	2.6
95	**150**	**2.0**	15.27	"	"	3450	-	114	125	2.4
85	**168**	**1.8**	17.06	"	"	3700	-	102	140	2.1
77	**186**	**1.6**	18.93	"	"	4100	-	92	155	1.95
73	**196**	**1.55**	19.99	"	"	4200	-	88	162	1.85
65	**220**	**1.35**	22.18	"	"	4600	-	79	181	1.65
57	**250**	**1.2**	25.45	"	"	4850	-	69	205	1.45
51	**280**	**1.05**	28.24	"	"	5100	-	62	230	1.3
48.5	**295**	**1.0**	29.83	"	"	5200	-	59	240	1.25
44	**325**	**0.92**	33.09	"	"	5400	-	53	270	1.1
41	**345**	**0.87**	35.17	"	"	5500	-	49.5	285	1.05
160	**89**	**3.3**	9.00	**BG40-../DHE09XA4**	51	2650	-	194	73	4.0
112	**127**	**3.2**	12.86	"	"	4500	-	136	105	3.9
101	**141**	**3.0**	14.28	"	"	4900	-	122	117	3.6
88	**162**	**2.6**	16.39	"	"	5300	-	107	133	3.2
80	**179**	**2.4**	18.19	"	"	5600	-	96	149	2.9
73	**196**	**2.2**	19.84	"	"	5800	-	88	162	2.6
66	**215**	**2.0**	22.02	"	"	6000	-	80	179	2.4
62	**230**	**1.85**	23.43	"	"	6200	-	75	191	2.2
56	**255**	**1.65**	26.01	"	"	6500	-	67	210	2.0
49.5	**285**	**1.5**	29.34	"	"	6800	-	60	235	1.8
44.5	**320**	**1.35**	32.57	"	"	7000	-	54	265	1.6
42.5	**335**	**1.25**	34.20	"	"	7000	-	51	280	1.5
38	**375**	**1.15**	37.96	"	"	7000	-	46	310	1.35
36	**395**	**1.1**	40.19	"	"	7000	-	43.5	325	1.3
32.5	**440**	**0.97**	44.62	"	"	7000	-	39	365	1.15
30	**475**	**0.89**	48.36	"	"	7000	-	36	395	1.1
27	**530**	**0.8**	53.69	"	"	7000	-	32.5	440	0.97
66	**215**	**2.9**	21.96	**BG50-../DHE09XA4**	59	8000	-	80	179	3.5
60	**235**	**2.7**	24.34	"	"	8700	-	72	198	3.2
49	**290**	**2.2**	29.62	"	"	8000	-	59	240	2.6
44	**325**	**1.95**	32.84	"	"	8700	-	53	270	2.3

BG-series helical-geared motors

Selection helical-geared motors DHE - IE2

P = 1.5 kW

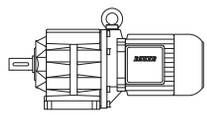

50 Hz			i	Type	m	F_{RN}	F_{RV}	60 Hz		
n_2	M_2	f_B						n_2	M_2	f_B
1/min	Nm				kg	N	N	1/min	Nm	
38.5	**370**	**1.7**	37.89	**BG50-../DHE09XA4**	"	10000	-	46	310	2.0
34.5	**415**	**1.5**	42.00	"	"	10000	-	41.5	345	1.85
31	**460**	**1.35**	47.02	"	"	10000	-	37.5	380	1.65
28	**510**	**1.25**	52.12	"	"	10000	-	33.5	425	1.5
24.5	**580**	**1.1**	59.42	"	"	10000	-	29.5	485	1.3
22	**650**	**0.97**	65.86	"	"	10000	-	26.5	540	1.15
20.5	**690**	**0.91**	71.97	**BG50Z-../DHE09XA4**	64	10000	-	24.5	580	1.1
18.5	**770**	**0.82**	79.78	"	"	10000	-	22	650	0.97
37.5	**380**	**3.2**	38.85	**BG60-../DHE09XA4**	90	16000	-	45	315	3.8
33.5	**425**	**2.8**	43.05	"	"	16000	-	40.5	350	3.4
29	**490**	**2.4**	50.31	"	"	16000	-	35	405	3.0
26	**550**	**2.2**	55.76	"	"	16000	-	31.5	450	2.7
24	**590**	**2.0**	60.90	"	"	16000	-	29	490	2.4
21.5	**660**	**1.8**	67.49	"	"	16000	-	26	550	2.2
19.5	**730**	**1.65**	75.71	**BG60Z-../DHE09XA4**	109	16000	-	23	620	1.95
16	**890**	**1.35**	91.09	"	"	16000	-	19.5	730	1.65
14.5	**980**	**1.2**	101.0	"	"	16000	-	17.5	810	1.5
12.5	**1140**	**1.05**	119.2	"	"	16000	-	15	950	1.25
11	**1300**	**0.92**	132.1	"	"	16000	-	13.5	1060	1.15
20	**710**	**3.2**	73.82	**BG70Z-../DHE09XA4**	149	20000	-	24	590	3.9
16.5	**860**	**2.7**	87.61	"	"	20000	-	20	710	3.2
15.5	**920**	**2.5**	95.74	"	"	20000	-	18.5	770	3.0
13	**1100**	**2.1**	113.6	"	"	20000	-	15.5	920	2.5
12	**1190**	**1.95**	124.0	"	"	20000	-	14.5	980	2.3
9.8	**1460**	**1.6**	147.2	"	"	20000	-	12	1190	1.95
8.8	**1620**	**1.4**	163.8	"	"	20000	-	11	1300	1.75
7.5	**1910**	**1.2**	194.4	"	"	20000	-	9.0	1590	1.45
6.9	**2050**	**1.1**	210.5	"	"	20000	-	8.3	1720	1.35
5.8	**2450**	**0.94**	249.8	"	"	20000	-	7.0	2000	1.15
5.7	**2400**	**1.05**	255.5	**BG70G20-../DHE09XA4**	146	20000	-	6.9	1960	1.3
5.3	**2550**	**0.98**	276.7	"	"	20000	-	6.3	2150	1.15
4.4	**3100**	**0.81**	328.4	"	"	20000	-	5.3	2550	0.98
10	**1430**	**2.9**	145.4	**BG80Z-../DHE09XA4**	217	26000	-	12	1190	3.5
9.0	**1590**	**2.6**	161.5	"	"	26000	-	11	1300	3.2
7.8	**1830**	**2.3**	186.8	"	"	26000	-	9.4	1520	2.8
7.0	**2000**	**2.1**	207.4	"	"	26000	-	8.4	1700	2.5
6.4	**1950**	**2.4**	227.2	**BG80G40-../DHE09XA4**	228	26000	-	7.7	1580	2.9
5.8	**2150**	**2.1**	252.3	"	"	26000	-	6.9	1760	2.6
5.1	**2500**	**1.85**	282.8	"	"	26000	-	6.2	2000	2.3
4.6	**2750**	**1.65**	314.0	"	"	26000	-	5.6	2200	2.1
4.0	**3200**	**1.45**	360.0	"	"	26000	-	4.9	2550	1.8
3.7	**3450**	**1.35**	399.8	"	"	26000	-	4.4	2850	1.6
3.4	**3850**	**1.2**	436.2	"	"	26000	-	4.0	3200	1.45
3.0	**4350**	**1.05**	484.3	"	"	26000	-	3.6	3600	1.3
2.6	**5100**	**0.9**	572.0	"	"	26000	-	3.1	4200	1.1
4.0	**3050**	**3.0**	360.3	**BG90G50-../DHE09XA4**	338	65000	-	4.9	2400	3.8
3.4	**3800**	**2.4**	435.8	"	"	65000	-	4.0	3150	2.9
2.9	**4450**	**2.1**	504.7	"	"	65000	-	3.5	3600	2.6
2.5	**5100**	**1.8**	588.8	"	"	65000	-	3.0	4200	2.2
2.3	**5600**	**1.65**	644.7	"	"	65000	-	2.7	4650	2.0
2.1	**6100**	**1.5**	714.2	"	"	65000	-	2.5	5000	1.85
1.7	**7700**	**1.2**	883.7	"	"	65000	-	2.0	6400	1.45
1.3	**10300**	**0.89**	1174	"	"	65000	-	1.5	8800	1.05
1.2	**11200**	**0.82**	1301	"	"	65000	-	1.4	9500	0.97
2.5	**5700**	**3.2**	591.1	**BG100Z-../DHE09XA4**	526	90000	-	3.0	4750	3.9
2.2	**6500**	**2.8**	658.1	"	"	90000	-	2.7	5300	3.5
1.9	**7500**	**2.5**	759.0	"	"	90000	-	2.3	6200	3.0
1.8	**7900**	**2.3**	845.1	"	"	90000	-	2.1	6800	2.7
1.5	**7900**	**2.3**	976.1	**BG100G50-../DHE09XA4**	525	90000	-	1.8	6300	2.9
1.4	**8800**	**2.1**	1043	"	"	90000	-	1.7	7000	2.6
1.2	**10300**	**1.8**	1204	"	"	90000	-	1.5	7900	2.3
1.0	**12900**	**1.45**	1444	"	"	90000	-	1.3	9600	1.95
0.9	**14300**	**1.3**	1678	"	"	90000	-	1.1	11400	1.6
0.8	**16100**	**1.15**	1867	"	"	90000	-	0.95	13200	1.4
0.7	**18400**	**1.0**	2154	"	"	90000	-	0.85	14700	1.25

P = 2.2 kW

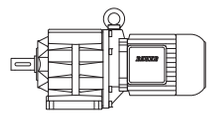

50 Hz			i	Type	m	F_{RN}	F_{RV}	60 Hz		
n_2	M_2	f_B						n_2	M_2	f_B
1/min	Nm				kg	N	N	1/min	Nm	
580	**36**	**1.55**	2.52	**BG10-../DHE09XA4C**	32	560	790	700	30	1.85
425	**49**	**1.25**	3.42	"	"	630	880	510	41	1.5
335	**62**	**1.1**	4.36	"	"	650	910	400	52	1.3
270	**77**	**0.97**	5.34	"	"	620	910	330	63	1.2
215	**97**	**0.84**	6.78	"	"	660	920	260	80	1.0
580	**36**	**2.3**	2.52	**BG20-../DHE09XA4C**	35	1660	-	700	30	2.8
435	**48**	**1.9**	3.33	"	"	1830	-	530	39.5	2.3
330	**63**	**1.65**	4.38	"	"	1990	-	400	52	2.0
265	**79**	**1.45**	5.49	"	"	2100	-	320	65	1.75
225	**93**	**1.3**	6.48	"	"	2250	-	270	77	1.6
180	**116**	**1.2**	8.02	"	"	2500	-	220	95	1.45
174	**120**	**1.0**	8.29	"	"	2250	-	210	100	1.2
162	**129**	**1.1**	8.91	"	"	2600	-	196	107	1.35
150	**140**	**0.87**	9.65	"	"	2250	-	181	116	1.05
137	**153**	**1.0**	10.54	"	"	2700	-	166	126	1.2
123	**170**	**0.93**	11.71	"	"	2800	-	149	141	1.1
110	**191**	**0.87**	13.21	"	"	2900	-	132	159	1.05
99	**210**	**0.82**	14.67	"	"	3050	-	119	176	0.98
540	**38.5**	**3.3**	2.67	**BG30-../DHE09XA4C**	39	1450	-	660	31.5	4.1
425	**49**	**2.8**	3.40	"	"	1580	-	520	40	3.5
345	**60**	**2.9**	4.21	"	"	1630	-	415	50	3.4
265	**79**	**2.5**	5.44	"	"	1670	-	320	65	3.1
215	**97**	**2.2**	6.75	"	"	1760	-	260	80	2.7
183	**114**	**1.9**	7.91	"	"	1760	-	220	95	2.3
168	**125**	**1.95**	8.60	"	"	2800	-	205	102	2.4
151	**139**	**1.85**	9.55	"	"	3000	-	183	114	2.2
136	**154**	**1.75**	10.65	"	"	2950	-	164	128	2.1
122	**172**	**1.6**	11.82	"	"	3200	-	148	141	1.95
105	**200**	**1.45**	13.77	"	"	3150	-	127	165	1.8
95	**220**	**1.35**	15.27	"	"	3450	-	114	184	1.65
85	**245**	**1.2**	17.06	"	"	3700	-	102	205	1.45
77	**270**	**1.1**	18.93	"	"	4100	-	92	225	1.35
73	**285**	**1.05**	19.99	"	"	4200	-	88	235	1.3
65	**320**	**0.94**	22.18	"	"	4600	-	79	265	1.15
57	**365**	**0.82**	25.45	"	"	4850	-	69	300	1.0
230	**91**	**3.2**	6.29	**BG40-../DHE09XA4C**	54	2600	-	280	75	3.9
189	**111**	**2.7**	7.62	"	"	2650	-	230	91	3.2
174	**120**	**2.9**	8.31	"	"	4100	-	210	100	3.4
157	**133**	**2.7**	9.23	"	"	4350	-	189	111	3.2
140	**150**	**2.5**	10.35	"	"	4350	-	169	124	3.0
126	**166**	**2.3**	11.49	"	"	4600	-	152	138	2.8
112	**187**	**2.2**	12.86	"	"	4500	-	136	154	2.7
101	**205**	**2.1**	14.28	"	"	4900	-	122	172	2.4
88	**235**	**1.8**	16.39	"	"	5300	-	107	196	2.2
80	**260**	**1.65**	18.19	"	"	5600	-	96	215	2.0
73	**285**	**1.5**	19.84	"	"	5800	-	88	235	1.8
66	**315**	**1.35**	22.02	"	"	6000	-	80	260	1.65
62	**335**	**1.25**	23.43	"	"	6200	-	75	280	1.5
56	**375**	**1.15**	26.01	"	"	6500	-	67	310	1.35
49.5	**420**	**1.0**	29.34	"	"	6800	-	60	350	1.2
44.5	**470**	**0.9**	32.57	"	"	7000	-	54	385	1.1
42.5	**490**	**0.87**	34.20	"	"	7000	-	51	410	1.05
120	**175**	**3.3**	12.06	**BG50-../DHE09XA4C**	62	5700	-	145	144	4.0
108	**194**	**3.1**	13.36	"	"	6100	-	131	160	3.7
88	**235**	**2.7**	16.53	"	"	6500	-	106	198	3.2
79	**265**	**2.4**	18.33	"	"	7200	-	95	220	2.9
66	**315**	**2.0**	21.96	"	"	8000	-	80	260	2.4
60	**350**	**1.8**	24.34	"	"	8700	-	72	290	2.2
49	**425**	**1.5**	29.62	"	"	8000	-	59	355	1.75
44	**475**	**1.35**	32.84	"	"	8700	-	53	395	1.6
38.5	**540**	**1.15**	37.89	"	"	10000	-	46	455	1.4

BG-series helical-geared motors

Selection helical-geared motors DHE - IE2

P = 2.2 kW

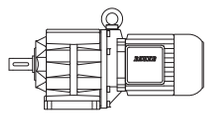

50 Hz			i	Type	m	F_{RN}	F_{RV}	60 Hz		
n_2	M_2	f_B						n_2	M_2	f_B
1/min	Nm				kg	N	N	1/min	Nm	
34.5	**600**	**1.05**	42.00	**BG50-../DHE09XA4C**	"	10000	-	41.5	500	1.25
31	**670**	**0.94**	47.02	"	"	10000	-	37.5	560	1.15
28	**750**	**0.84**	52.12	"	"	10000	-	33.5	620	1.0
49.5	**420**	**2.9**	29.31	**BG60-../DHE09XA4C**	92	14800	-	60	350	3.4
44.5	**470**	**2.6**	32.48	"	"	15400	-	54	385	3.1
37.5	**560**	**2.1**	38.85	"	"	16000	-	45	465	2.6
33.5	**620**	**1.95**	43.05	"	"	16000	-	40.5	510	2.4
29	**720**	**1.65**	50.31	"	"	16000	-	35	600	2.0
26	**800**	**1.5**	55.76	"	"	16000	-	31.5	660	1.8
24	**870**	**1.4**	60.90	"	"	16000	-	29	720	1.65
21.5	**970**	**1.25**	67.49	"	"	16000	-	26	800	1.5
19.5	**1070**	**1.1**	75.71	**BG60Z-../DHE09XA4C**	112	16000	-	23	910	1.3
16	**1310**	**0.92**	91.09	"	"	16000	-	19.5	1070	1.1
14.5	**1440**	**0.83**	101.0	"	"	16000	-	17.5	1200	1.0
29	**720**	**3.2**	50.40	**BG70-../DHE09XA4C**	130	20000	-	35	600	3.8
24.5	**850**	**2.7**	59.82	"	"	20000	-	29.5	710	3.2
22.5	**930**	**2.5**	64.85	**BG70Z-../DHE09XA4C**	151	20000	-	27	770	3.0
20	**1050**	**2.2**	73.82	"	"	20000	-	24	870	2.6
16.5	**1270**	**1.8**	87.61	"	"	20000	-	20	1050	2.2
15.5	**1350**	**1.7**	95.74	"	"	20000	-	18.5	1130	2.0
13	**1610**	**1.45**	113.6	"	"	20000	-	15.5	1350	1.7
12	**1750**	**1.3**	124.0	"	"	20000	-	14.5	1440	1.6
9.8	**2100**	**1.1**	147.2	"	"	20000	-	12	1750	1.3
8.8	**2350**	**0.98**	163.8	"	"	20000	-	11	1910	1.2
7.5	**2800**	**0.82**	194.4	"	"	20000	-	9.0	2300	1.0
15.5	**1350**	**3.1**	93.89	**BG80Z-../DHE09XA4C**	219	26000	-	19	1100	3.8
13	**1610**	**2.6**	112.4	"	"	26000	-	15.5	1350	3.1
12	**1750**	**2.4**	124.8	"	"	26000	-	14	1500	2.8
10	**2100**	**2.0**	145.4	"	"	26000	-	12	1750	2.4
9.0	**2300**	**1.85**	161.5	"	"	26000	-	11	1910	2.2
7.8	**2650**	**1.6**	186.8	"	"	26000	-	9.4	2200	1.9
7.0	**3000**	**1.4**	207.4	"	"	26000	-	8.4	2500	1.7
6.4	**3000**	**1.55**	227.2	**BG80G40-../DHE09XA4C**	231	26000	-	7.7	2400	1.9
5.8	**3300**	**1.4**	252.3	"	"	26000	-	6.9	2700	1.7
5.1	**3800**	**1.2**	282.8	"	"	26000	-	6.2	3050	1.5
4.6	**4200**	**1.1**	314.0	"	"	26000	-	5.6	3400	1.35
4.0	**4900**	**0.94**	360.0	"	"	26000	-	4.9	3950	1.15
3.7	**5300**	**0.87**	399.8	"	"	26000	-	4.4	4350	1.05
8.1	**2550**	**3.3**	178.5	**BG90Z-../DHE09XA4C**	329	65000	-	9.8	2100	4.0
7.0	**3000**	**2.8**	208.3	"	"	65000	-	8.4	2500	3.4
6.4	**3250**	**2.6**	228.1	"	"	65000	-	7.7	2700	3.1
5.5	**3350**	**2.7**	262.5	**BG90G50-../DHE09XA4C**	340	65000	-	6.7	2700	3.4
4.9	**4000**	**2.3**	298.8	"	"	65000	-	5.9	3250	2.8
4.0	**4750**	**1.95**	360.3	"	"	65000	-	4.9	3800	2.4
3.4	**5700**	**1.6**	435.8	"	"	65000	-	4.0	4850	1.9
2.9	**6700**	**1.35**	504.7	"	"	65000	-	3.5	5500	1.65
2.5	**7800**	**1.2**	588.8	"	"	65000	-	3.0	6400	1.45
2.3	**8500**	**1.1**	644.7	"	"	65000	-	2.7	7100	1.3
2.1	**9300**	**0.99**	714.2	"	"	65000	-	2.5	7700	1.2
3.2	**6500**	**2.8**	456.7	**BG100Z-../DHE09XA4C**	528	90000	-	3.9	5300	3.5
2.9	**7200**	**2.6**	508.5	"	"	90000	-	3.5	6000	3.1
2.5	**8400**	**2.2**	591.1	"	"	90000	-	3.0	7000	2.6
2.2	**9500**	**1.95**	658.1	"	"	90000	-	2.7	7700	2.4
1.9	**11000**	**1.7**	759.0	"	"	90000	-	2.3	9100	2.0
1.8	**11600**	**1.6**	845.1	"	"	90000	-	2.1	10000	1.85
1.5	**12400**	**1.5**	976.1	**BG100G50-../DHE09XA4C**	527	90000	-	1.8	10000	1.85
1.4	**13600**	**1.35**	1043	"	"	90000	-	1.7	10900	1.7
1.2	**15800**	**1.15**	1204	"	"	90000	-	1.5	12300	1.5
1.0	**19600**	**0.94**	1444	"	"	90000	-	1.3	14700	1.25

P = 3 kW

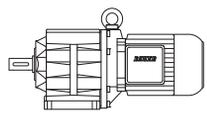

50 Hz			i	Type	m	F_{RN}	F_{RV}	60 Hz		
n_2	M_2	f_B						n_2	M_2	f_B
1/min	Nm				kg	N	N	1/min	Nm	
540	**53**	**2.4**	2.67	**BG30-../DHE11MA4**	46	1450	-	660	43	3.0
425	**67**	**2.1**	3.40	"	"	1580	-	520	55	2.5
345	**83**	**2.1**	4.21	"	"	1630	-	415	69	2.5
265	**108**	**1.85**	5.44	"	"	1670	-	320	89	2.2
215	**133**	**1.65**	6.75	"	"	1760	-	260	110	1.95
183	**156**	**1.4**	7.91	"	"	1760	-	220	130	1.65
168	**170**	**1.45**	8.60	"	"	2800	-	205	139	1.75
151	**189**	**1.35**	9.55	"	"	3000	-	183	156	1.65
136	**210**	**1.25**	10.65	"	"	2950	-	164	174	1.55
122	**230**	**1.2**	11.82	"	"	3200	-	148	193	1.4
105	**270**	**1.1**	13.77	"	"	3150	-	127	225	1.3
95	**300**	**1.0**	15.27	"	"	3450	-	114	250	1.2
85	**335**	**0.9**	17.06	"	"	3700	-	102	280	1.05
77	**370**	**0.81**	18.93	"	"	4100	-	92	310	0.97
365	**78**	**3.1**	3.97	**BG40-../DHE11MA4**	65	2400	-	440	65	3.8
295	**97**	**2.8**	4.94	"	"	2450	-	355	80	3.4
230	**124**	**2.4**	6.29	"	"	2600	-	280	102	2.9
189	**151**	**1.95**	7.62	"	"	2650	-	230	124	2.4
174	**164**	**2.1**	8.31	"	"	4100	-	210	136	2.5
157	**182**	**1.95**	9.23	"	"	4350	-	189	151	2.4
140	**200**	**1.9**	10.35	"	"	4350	-	169	169	2.2
126	**225**	**1.75**	11.49	"	"	4600	-	152	188	2.1
112	**255**	**1.6**	12.86	"	"	4500	-	136	210	1.95
101	**280**	**1.5**	14.28	"	"	4900	-	122	230	1.85
88	**325**	**1.3**	16.39	"	"	5300	-	107	265	1.6
80	**355**	**1.2**	18.19	"	"	5600	-	96	295	1.45
73	**390**	**1.1**	19.84	"	"	5800	-	88	325	1.3
66	**430**	**0.99**	22.02	"	"	6000	-	80	355	1.2
62	**460**	**0.92**	23.43	"	"	6200	-	75	380	1.1
56	**510**	**0.83**	26.01	"	"	6500	-	67	425	1.0
166	**172**	**3.0**	8.70	**BG50-../DHE11MA4**	75	5300	-	200	143	3.6
150	**191**	**2.7**	9.65	"	"	5600	-	181	158	3.3
120	**235**	**2.5**	12.06	"	"	5700	-	145	197	2.9
108	**265**	**2.2**	13.36	"	"	6100	-	131	215	2.8
88	**325**	**1.95**	16.53	"	"	6500	-	106	270	2.3
79	**360**	**1.75**	18.33	"	"	7200	-	95	300	2.1
66	**430**	**1.45**	21.96	"	"	8000	-	80	355	1.75
60	**475**	**1.35**	24.34	"	"	8700	-	72	395	1.6
49	**580**	**1.1**	29.62	"	"	8000	-	59	485	1.3
44	**650**	**0.97**	32.84	"	"	8700	-	53	540	1.15
38.5	**740**	**0.85**	37.89	"	"	10000	-	46	620	1.0
78	**365**	**3.1**	18.62	**BG60-../DHE11MA4**	107	12400	-	94	300	3.8
65	**440**	**2.7**	22.40	"	"	13300	-	78	365	3.3
59	**485**	**2.5**	24.82	"	"	13800	-	71	400	3.0
49.5	**570**	**2.1**	29.31	"	"	14800	-	60	475	2.5
44.5	**640**	**1.9**	32.48	"	"	15400	-	54	530	2.3
37.5	**760**	**1.6**	38.85	"	"	16000	-	45	630	1.9
33.5	**850**	**1.4**	43.05	"	"	16000	-	40.5	700	1.7
29	**980**	**1.2**	50.31	"	"	16000	-	35	810	1.5
26	**1100**	**1.1**	55.76	"	"	16000	-	31.5	900	1.35
24	**1190**	**1.0**	60.90	"	"	16000	-	29	980	1.2
21.5	**1330**	**0.9**	67.49	"	"	16000	-	26	1100	1.1
19.5	**1460**	**0.82**	75.71	**BG60Z-../DHE11MA4**	123	16000	-	23	1240	0.97
41	**690**	**3.3**	35.24	**BG70-../DHE11MA4**	138	18300	-	49.5	570	4.0
37	**770**	**3.0**	39.22	"	"	19100	-	44.5	640	3.6
31	**920**	**2.5**	46.54	"	"	20000	-	37.5	760	3.0
29	**980**	**2.3**	50.40	"	"	20000	-	35	810	2.8
24.5	**1160**	**2.0**	59.82	"	"	20000	-	29.5	970	2.4
22.5	**1270**	**1.8**	64.85	**BG70Z-../DHE11MA4**	164	20000	-	27	1060	2.2
20	**1430**	**1.6**	73.82	"	"	20000	-	24	1190	1.95
16.5	**1730**	**1.35**	87.61	"	"	20000	-	20	1430	1.6

BG-series helical-geared motors

Selection helical-geared motors DHE - IE2

P = 3 kW

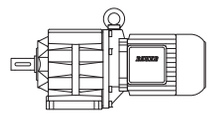

50 Hz			i	Type	m	F_{RN}	F_{RV}	60 Hz		
n_2	M_2	f_B						n_2	M_2	f_B
1/min	Nm				kg	N	N	1/min	Nm	
15.5	**1840**	**1.25**	95.74	**BG70Z-../DHE11MA4**	"	20000	-	18.5	1540	1.5
13	**2200**	**1.05**	113.6	"	"	20000	-	15.5	1840	1.25
12	**2350**	**0.98**	124.0	"	"	20000	-	14.5	1970	1.15
22	**1300**	**3.2**	66.40	**BG80Z-../DHE11MA4**	234	26000	-	26.5	1080	3.9
20	**1430**	**2.9**	73.73	"	"	26000	-	24	1190	3.5
17.5	**1630**	**2.6**	84.55	"	"	26000	-	21	1360	3.1
15.5	**1840**	**2.3**	93.89	"	"	26000	-	19	1500	2.8
13	**2200**	**1.9**	112.4	"	"	26000	-	15.5	1840	2.3
12	**2350**	**1.8**	124.8	"	"	26000	-	14	2000	2.1
10	**2850**	**1.45**	145.4	"	"	26000	-	12	2350	1.8
9.0	**3150**	**1.35**	161.5	"	"	26000	-	11	2600	1.6
7.8	**3650**	**1.15**	186.8	"	"	26000	-	9.4	3000	1.4
7.0	**4050**	**1.05**	207.4	"	"	26000	-	8.4	3400	1.25
6.4	**4150**	**1.1**	227.2	**BG80G40-../DHE11MA4**	242	26000	-	7.7	3400	1.35
5.8	**4600**	**1.0**	252.3	"	"	26000	-	6.9	3800	1.2
5.1	**5300**	**0.87**	282.8	"	"	26000	-	6.2	4300	1.05
10.5	**2700**	**3.1**	139.2	**BG90Z-../DHE11MA4**	336	65000	-	12.5	2250	3.7
8.9	**3200**	**2.6**	163.0	"	"	65000	-	11	2600	3.2
8.1	**3500**	**2.4**	178.5	"	"	65000	-	9.8	2900	2.9
7.0	**4050**	**2.1**	208.3	"	"	65000	-	8.4	3400	2.5
6.4	**4450**	**1.9**	228.1	"	"	65000	-	7.7	3700	2.3
5.5	**4750**	**1.95**	262.5	**BG90G50-../DHE11MA4**	353	65000	-	6.7	3850	2.4
4.9	**5500**	**1.65**	298.8	"	"	65000	-	5.9	4550	2.0
4.0	**6600**	**1.4**	360.3	"	"	65000	-	4.9	5300	1.75
3.4	**8000**	**1.15**	435.8	"	"	65000	-	4.0	6700	1.35
2.9	**9300**	**0.99**	504.7	"	"	65000	-	3.5	7700	1.2
2.5	**10800**	**0.85**	588.8	"	"	65000	-	3.0	8900	1.05
5.6	**5100**	**3.3**	259.0	**BG100-../DHE11MA4**	453	90000	-	6.8	4200	4.0
4.8	**5900**	**3.1**	300.4	**BG100Z-../DHE11MA4**	543	90000	-	5.8	4900	3.8
4.2	**6800**	**2.7**	343.6	"	"	90000	-	5.1	5600	3.3
3.8	**7500**	**2.5**	382.6	"	"	90000	-	4.6	6200	3.0
3.2	**8900**	**2.1**	456.7	"	"	90000	-	3.9	7300	2.5
2.9	**9800**	**1.9**	508.5	"	"	90000	-	3.5	8100	2.3
2.5	**11400**	**1.6**	591.1	"	"	90000	-	3.0	9500	1.95
2.2	**13000**	**1.4**	658.1	"	"	90000	-	2.7	10600	1.75
1.9	**15000**	**1.25**	759.0	"	"	90000	-	2.3	12400	1.5
1.8	**15900**	**1.15**	845.1	"	"	90000	-	2.1	13600	1.35
1.5	**17500**	**1.05**	976.1	**BG100G50-../DHE11MA4**	540	90000	-	1.8	14300	1.3
1.4	**19000**	**0.97**	1043	"	"	90000	-	1.7	15400	1.2
1.2	**22200**	**0.83**	1204	"	"	90000	-	1.5	17400	1.05

P = 4 kW

50 Hz			i	Type	m	F_{RN}	F_{RV}	60 Hz		
n_2	M_2	f_B						n_2	M_2	f_B
1/min	Nm				kg	N	N	1/min	Nm	
540	**70**	**1.85**	2.67	**BG30-../DHE11LA4**	58	1450	-	660	57	2.2
425	**89**	**1.55**	3.40	"	"	1580	-	520	73	1.9
345	**110**	**1.55**	4.21	"	"	1630	-	415	92	1.85
265	**144**	**1.4**	5.44	"	"	1670	-	320	119	1.7
215	**177**	**1.25**	6.75	"	"	1760	-	260	146	1.5
183	**205**	**1.05**	7.91	"	"	1760	-	220	173	1.25
168	**225**	**1.1**	8.60	"	"	2800	-	205	186	1.3
151	**250**	**1.0**	9.55	"	"	3000	-	183	205	1.25
136	**280**	**0.95**	10.65	"	"	2950	-	164	230	1.15
122	**310**	**0.88**	11.82	"	"	3200	-	148	255	1.05
105	**360**	**0.82**	13.77	"	"	3150	-	127	300	0.98
590	**64**	**3.2**	2.46	**BG40-../DHE11LA4**	77	2150	-	710	53	3.8
455	**83**	**2.7**	3.19	"	"	2350	-	550	69	3.2
365	**104**	**2.3**	3.97	"	"	2400	-	440	86	2.8

P = 4 kW

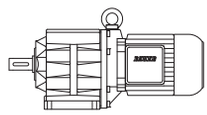

50 Hz			i	Type	m	F_{RN}	F_{RV}	60 Hz		
n_2	M_2	f_B						n_2	M_2	f_B
1/min	Nm				kg	N	N	1/min	Nm	
295	**129**	**2.1**	4.94	**BG40-../DHE11LA4**	"	2450	-	355	107	2.5
230	**166**	**1.8**	6.29	"	"	2600	-	280	136	2.2
189	**200**	**1.5**	7.62	"	"	2650	-	230	166	1.8
174	**215**	**1.6**	8.31	"	"	4100	-	210	181	1.9
157	**240**	**1.5**	9.23	"	"	4350	-	189	200	1.8
140	**270**	**1.4**	10.35	"	"	4350	-	169	225	1.65
126	**300**	**1.3**	11.49	"	"	4600	-	152	250	1.55
112	**340**	**1.2**	12.86	"	"	4500	-	136	280	1.45
101	**375**	**1.1**	14.28	"	"	4900	-	122	310	1.35
88	**430**	**0.99**	16.39	"	"	5300	-	107	355	1.2
80	**475**	**0.89**	18.19	"	"	5600	-	96	395	1.1
73	**520**	**0.82**	19.84	"	"	5800	-	88	430	0.99
295	**129**	**3.1**	4.91	**BG50-../DHE11LA4**	86	3500	-	355	107	3.7
215	**177**	**2.6**	6.74	"	"	3750	-	260	146	3.1
166	**230**	**2.2**	8.70	"	"	5300	-	200	191	2.7
150	**250**	**2.1**	9.65	"	"	5600	-	181	210	2.5
120	**315**	**1.85**	12.06	"	"	5700	-	145	260	2.2
108	**350**	**1.7**	13.36	"	"	6100	-	131	290	2.0
88	**430**	**1.45**	16.53	"	"	6500	-	106	360	1.75
79	**480**	**1.3**	18.33	"	"	7200	-	95	400	1.6
66	**570**	**1.1**	21.96	"	"	8000	-	80	475	1.35
60	**630**	**1.0**	24.34	"	"	8700	-	72	530	1.2
49	**770**	**0.82**	29.62	"	"	8000	-	59	640	0.98
119	**320**	**3.1**	12.16	**BG60-../DHE11LA4**	119	10800	-	144	265	3.7
107	**355**	**2.9**	13.47	"	"	11200	-	130	290	3.5
86	**440**	**2.5**	16.80	"	"	12000	-	104	365	3.0
78	**485**	**2.4**	18.62	"	"	12400	-	94	405	2.8
65	**580**	**2.1**	22.40	"	"	13300	-	78	485	2.5
59	**640**	**1.9**	24.82	"	"	13800	-	71	530	2.3
49.5	**770**	**1.55**	29.31	"	"	14800	-	60	630	1.9
44.5	**850**	**1.4**	32.48	"	"	15400	-	54	700	1.7
37.5	**1010**	**1.2**	38.85	"	"	16000	-	45	840	1.45
33.5	**1140**	**1.05**	43.05	"	"	16000	-	40.5	940	1.3
29	**1310**	**0.92**	50.31	"	"	16000	-	35	1090	1.1
26	**1460**	**0.82**	55.76	"	"	16000	-	31.5	1210	0.99
53	**720**	**3.2**	27.21	**BG70-../DHE11LA4**	149	16400	-	64	590	3.9
49	**770**	**3.0**	29.69	"	"	16900	-	59	640	3.6
41	**930**	**2.5**	35.24	"	"	18300	-	49.5	770	3.0
37	**1030**	**2.2**	39.22	"	"	19100	-	44.5	850	2.7
31	**1230**	**1.85**	46.54	"	"	20000	-	37.5	1010	2.3
29	**1310**	**1.75**	50.40	"	"	20000	-	35	1090	2.1
24.5	**1550**	**1.5**	59.82	"	"	20000	-	29.5	1290	1.8
22.5	**1690**	**1.35**	64.85	**BG70Z-../DHE11LA4**	176	20000	-	27	1410	1.65
20	**1910**	**1.2**	73.82	"	"	20000	-	24	1590	1.45
16.5	**2300**	**1.0**	87.61	"	"	20000	-	20	1910	1.2
15.5	**2450**	**0.94**	95.74	"	"	20000	-	18.5	2050	1.1
30	**1270**	**3.3**	48.80	**BG80-../DHE11LA4**	204	23800	-	36	1060	4.0
25.5	**1490**	**2.8**	57.24	"	"	25400	-	30.5	1250	3.4
23	**1660**	**2.5**	63.56	"	"	26000	-	27.5	1380	3.0
22	**1730**	**2.4**	66.40	**BG80Z-../DHE11LA4**	246	26000	-	26.5	1440	2.9
20	**1910**	**2.2**	73.73	"	"	26000	-	24	1590	2.6
17.5	**2150**	**1.95**	84.55	"	"	26000	-	21	1810	2.3
15.5	**2450**	**1.7**	93.89	"	"	26000	-	19	2000	2.1
13	**2900**	**1.45**	112.4	"	"	26000	-	15.5	2450	1.7
12	**3150**	**1.35**	124.8	"	"	26000	-	14	2700	1.55
10	**3800**	**1.1**	145.4	"	"	26000	-	12	3150	1.35
9.0	**4200**	**1.0**	161.5	"	"	26000	-	11	3450	1.2
7.8	**4850**	**0.87**	186.8	"	"	26000	-	9.4	4050	1.05
6.4	**5600**	**0.82**	227.2	**BG80G40-../DHE11LA4**	254	26000	-	7.7	4650	0.99

BG-series helical-geared motors

Selection helical-geared motors DHE - IE2

P = 4 kW

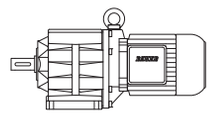

50 Hz			i	Type	m	F_{RN}	F_{RV}	60 Hz		
n_2	M_2	f_B						n_2	M_2	f_B
1/min	Nm				kg	N	N	1/min	Nm	
14	**2700**	**3.1**	105.7	**BG90Z-../DHE11LA4**	348	65000	-	16.5	2300	3.7
11.5	**3300**	**2.5**	127.1	"	"	65000	-	14	2700	3.1
10.5	**3600**	**2.3**	139.2	"	"	65000	-	12.5	3050	2.8
8.9	**4250**	**2.0**	163.0	"	"	65000	-	11	3450	2.4
8.1	**4700**	**1.8**	178.5	"	"	65000	-	9.8	3850	2.2
7.0	**5400**	**1.55**	208.3	"	"	65000	-	8.4	4500	1.85
6.4	**5900**	**1.4**	228.1	"	"	65000	-	7.7	4950	1.7
5.5	**6500**	**1.4**	262.5	**BG90G50-../DHE11LA4**	365	65000	-	6.7	5200	1.75
4.9	**7500**	**1.25**	298.8	"	"	65000	-	5.9	6100	1.5
4.0	**9000**	**1.0**	360.3	"	"	65000	-	4.9	7300	1.25
3.4	**10800**	**0.85**	435.8	"	"	65000	-	4.0	9100	1.0
7.3	**5200**	**3.2**	198.8	**BG100-../DHE11LA4**	465	90000	-	8.8	4300	3.9
6.2	**6100**	**2.8**	232.6	"	"	90000	-	7.5	5000	3.4
5.6	**6800**	**2.5**	259.0	"	"	90000	-	6.8	5600	3.0
5.4	**7000**	**2.6**	269.8	**BG100Z-../DHE11LA4**	555	90000	-	6.5	5800	3.2
4.8	**7900**	**2.3**	300.4	"	"	90000	-	5.8	6500	2.8
4.2	**9000**	**2.1**	343.6	"	"	90000	-	5.1	7400	2.5
3.8	**10000**	**1.85**	382.6	"	"	90000	-	4.6	8300	2.2
3.2	**11900**	**1.55**	456.7	"	"	90000	-	3.9	9700	1.9
2.9	**13100**	**1.4**	508.5	"	"	90000	-	3.5	10900	1.7
2.5	**15200**	**1.2**	591.1	"	"	90000	-	3.0	12700	1.45
2.2	**17300**	**1.05**	658.1	"	"	90000	-	2.7	14100	1.3
1.9	**20100**	**0.92**	759.0	"	"	90000	-	2.3	16600	1.1
1.8	**21200**	**0.87**	845.1	"	"	90000	-	2.1	18100	1.0

P = 5.5 kW

50 Hz			i	Type	m	F_{RN}	F_{RV}	60 Hz		
n_2	M_2	f_B						n_2	M_2	f_B
1/min	Nm				kg	N	N	1/min	Nm	
550	**95**	**1.35**	2.67	**BG30-../DHE11LA4C**	62	1450	-	660	79	1.6
430	**122**	**1.15**	3.40	"	"	1580	-	520	101	1.4
350	**150**	**1.15**	4.21	"	"	1630	-	420	125	1.35
270	**194**	**1.05**	5.44	"	"	1670	-	325	161	1.25
220	**235**	**0.92**	6.75	"	"	1760	-	265	198	1.1
170	**305**	**0.81**	8.60	"	"	2800	-	205	255	0.96
600	**87**	**2.3**	2.46	**BG40-../DHE11LA4C**	81	2150	-	720	72	2.8
460	**114**	**1.95**	3.19	"	"	2350	-	560	93	2.4
370	**141**	**1.75**	3.97	"	"	2400	-	445	118	2.1
300	**175**	**1.55**	4.94	"	"	2450	-	360	145	1.85
235	**220**	**1.35**	6.29	"	"	2600	-	280	187	1.6
192	**270**	**1.1**	7.62	"	"	2650	-	235	220	1.35
176	**295**	**1.15**	8.31	"	"	4100	-	215	240	1.45
163	**320**	**0.92**	9.00	"	"	2650	-	196	265	1.1
159	**330**	**1.1**	9.23	"	"	4350	-	191	275	1.3
142	**365**	**1.05**	10.35	"	"	4350	-	171	305	1.25
128	**410**	**0.95**	11.49	"	"	4600	-	154	340	1.15
114	**460**	**0.89**	12.86	"	"	4500	-	137	380	1.1
103	**500**	**0.84**	14.28	"	"	4900	-	124	420	1.0
415	**126**	**2.8**	3.55	**BG50-../DHE11LA4C**	90	3300	-	500	105	3.3
300	**175**	**2.3**	4.91	"	"	3500	-	360	145	2.7
220	**235**	**1.9**	6.74	"	"	3750	-	265	198	2.3
168	**310**	**1.65**	8.70	"	"	5300	-	205	255	2.0
152	**345**	**1.5**	9.65	"	"	5600	-	183	285	1.85
122	**430**	**1.35**	12.06	"	"	5700	-	146	355	1.6
110	**475**	**1.25**	13.36	"	"	6100	-	132	395	1.5
89	**590**	**1.05**	16.53	"	"	6500	-	107	490	1.3
80	**650**	**0.97**	18.33	"	"	7200	-	97	540	1.15
67	**780**	**0.81**	21.96	"	"	8000	-	81	640	0.98

P = 5.5 kW

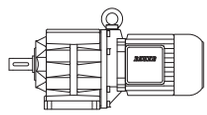

50 Hz			i	Type	m	F_{RN}	F_{RV}	60 Hz		
n_2	M_2	f_B						n_2	M_2	f_B
1/min	Nm				kg	N	N	1/min	Nm	
215	**240**	**3.3**	6.88	**BG60-../DHE11LA4C**	123	8600	-	260	200	3.9
160	**325**	**2.7**	9.13	"	"	9800	-	193	270	3.3
145	**360**	**2.5**	10.12	"	"	10200	-	174	300	3.0
121	**430**	**2.3**	12.16	"	"	10800	-	145	360	2.7
109	**480**	**2.1**	13.47	"	"	11200	-	131	400	2.6
87	**600**	**1.85**	16.80	"	"	12000	-	105	500	2.2
79	**660**	**1.75**	18.62	"	"	12400	-	95	550	2.1
66	**790**	**1.5**	22.40	"	"	13300	-	79	660	1.8
59	**890**	**1.35**	24.82	"	"	13800	-	71	730	1.65
50	**1050**	**1.15**	29.31	"	"	14800	-	61	860	1.4
45	**1160**	**1.05**	32.48	"	"	15400	-	55	950	1.25
38	**1380**	**0.87**	38.85	"	"	16000	-	45.5	1150	1.05
70	**750**	**3.1**	20.98	**BG70-../DHE11LA4C**	153	14600	-	84	620	3.7
64	**820**	**2.8**	22.92	"	"	15100	-	77	680	3.4
54	**970**	**2.4**	27.21	"	"	16400	-	65	800	2.9
49.5	**1060**	**2.2**	29.69	"	"	16900	-	60	870	2.6
41.5	**1260**	**1.85**	35.24	"	"	18300	-	50	1050	2.2
37.5	**1400**	**1.65**	39.22	"	"	19100	-	45	1160	2.0
31.5	**1660**	**1.4**	46.54	"	"	20000	-	38	1380	1.65
29	**1810**	**1.25**	50.40	"	"	20000	-	35	1500	1.55
24.5	**2100**	**1.1**	59.82	"	"	20000	-	29.5	1780	1.3
23	**2250**	**1.0**	64.85	**BG70Z-../DHE11LA4C**	180	20000	-	27.5	1910	1.2
20	**2600**	**0.88**	73.82	"	"	20000	-	24	2150	1.05
38.5	**1360**	**3.1**	38.00	**BG80-../DHE11LA4C**	208	21300	-	46.5	1120	3.8
33.5	**1560**	**2.7**	43.94	"	"	22600	-	40.5	1290	3.3
30	**1750**	**2.4**	48.80	"	"	23800	-	36.5	1430	2.9
26	**2000**	**2.1**	57.24	"	"	25400	-	31	1690	2.5
23	**2250**	**1.85**	63.56	"	"	26000	-	28	1870	2.2
22	**2350**	**1.8**	66.40	**BG80Z-../DHE11LA4C**	250	26000	-	27	1940	2.2
20	**2600**	**1.6**	73.73	"	"	26000	-	24	2150	1.95
17.5	**3000**	**1.4**	84.55	"	"	26000	-	21	2500	1.7
16	**3250**	**1.3**	93.89	"	"	26000	-	19	2750	1.55
13	**4000**	**1.05**	112.4	"	"	26000	-	16	3250	1.3
12	**4350**	**0.97**	124.8	"	"	26000	-	14.5	3600	1.15
10.5	**5000**	**0.84**	145.4	"	"	26000	-	12.5	4200	1.0
19.5	**2650**	**3.2**	76.61	**BG90Z-../DHE11LA4C**	352	65000	-	23	2250	3.7
17.5	**3000**	**2.8**	83.91	"	"	65000	-	21	2500	3.4
15.5	**3350**	**2.5**	96.53	"	"	65000	-	18.5	2800	3.0
14	**3750**	**2.2**	105.7	"	"	65000	-	17	3050	2.8
11.5	**4550**	**1.85**	127.1	"	"	65000	-	14	3750	2.2
10.5	**5000**	**1.7**	139.2	"	"	65000	-	13	4000	2.1
9.0	**5800**	**1.45**	163.0	"	"	65000	-	11	4750	1.75
8.2	**6400**	**1.3**	178.5	"	"	65000	-	9.9	5300	1.6
7.1	**7300**	**1.15**	208.3	"	"	65000	-	8.5	6100	1.4
6.5	**8000**	**1.05**	228.1	"	"	65000	-	7.8	6700	1.25
5.6	**8900**	**1.05**	262.5	**BG90G50-../DHE11LA4C**	369	65000	-	6.8	7200	1.3
4.9	**10400**	**0.88**	298.8	"	"	65000	-	5.9	8600	1.05
9.5	**5500**	**3.1**	154.8	**BG100-../DHE11LA4C**	469	90000	-	11.5	4550	3.7
8.2	**6400**	**2.6**	178.6	"	"	90000	-	9.9	5300	3.2
7.4	**7000**	**2.4**	198.8	"	"	90000	-	8.9	5900	2.8
6.3	**8300**	**2.0**	232.6	"	"	90000	-	7.6	6900	2.4
5.7	**9200**	**1.85**	259.0	"	"	90000	-	6.8	7700	2.2
5.5	**9500**	**1.95**	269.8	**BG100Z-../DHE11LA4C**	559	90000	-	6.6	7900	2.3
4.9	**10700**	**1.75**	300.4	"	"	90000	-	5.9	8900	2.1
4.3	**12200**	**1.5**	343.6	"	"	90000	-	5.2	10100	1.85
3.9	**13400**	**1.4**	382.6	"	"	90000	-	4.7	11100	1.65
3.2	**16400**	**1.15**	456.7	"	"	90000	-	3.9	13400	1.4
2.9	**18100**	**1.0**	508.5	"	"	90000	-	3.5	15000	1.25
2.5	**21000**	**0.88**	591.1	"	"	90000	-	3.0	17500	1.05
2.3	**22800**	**0.81**	658.1	"	"	90000	-	2.7	19400	0.95

BG-series helical-geared motors

Selection helical-geared motors DHE - IE2

P = 7.5 kW

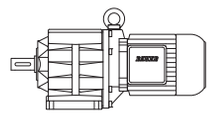

50 Hz			i	Type	m	F_{RN}	F_{RV}	60 Hz		
n_2	M_2	f_B						n_2	M_2	f_B
1/min	Nm				kg	N	N	1/min	Nm	
600	**119**	**2.6**	2.47	**BG50-../DHE13LA4**	101	2900	-	720	99	3.1
415	**172**	**2.0**	3.55	"	"	3300	-	500	143	2.4
300	**235**	**1.7**	4.91	"	"	3500	-	360	198	2.0
220	**325**	**1.4**	6.74	"	"	3750	-	265	270	1.65
168	**425**	**1.2**	8.70	"	"	5300	-	205	345	1.45
152	**470**	**1.1**	9.65	"	"	5600	-	183	390	1.35
122	**580**	**0.99**	12.06	"	"	5700	-	146	490	1.2
110	**650**	**0.91**	13.36	"	"	6100	-	132	540	1.1
295	**240**	**2.9**	4.98	**BG60-../DHE13LA4**	135	7800	-	355	200	3.4
215	**330**	**2.4**	6.88	"	"	8600	-	260	275	2.8
160	**445**	**2.0**	9.13	"	"	9800	-	193	370	2.4
145	**490**	**1.85**	10.12	"	"	10200	-	174	410	2.2
121	**590**	**1.7**	12.16	"	"	10800	-	145	490	2.0
109	**650**	**1.55**	13.47	"	"	11200	-	131	540	1.9
87	**820**	**1.35**	16.80	"	"	12000	-	105	680	1.65
79	**900**	**1.25**	18.62	"	"	12400	-	95	750	1.55
66	**1080**	**1.1**	22.40	"	"	13300	-	79	900	1.35
59	**1210**	**0.99**	24.82	"	"	13800	-	71	1000	1.2
50	**1430**	**0.84**	29.31	"	"	14800	-	61	1170	1.05
95	**750**	**3.1**	15.53	**BG70-../DHE13LA4**	165	12700	-	114	620	3.7
83	**860**	**2.7**	17.68	"	"	13400	-	100	710	3.2
70	**1020**	**2.3**	20.98	"	"	14600	-	84	850	2.7
64	**1110**	**2.1**	22.92	"	"	15100	-	77	930	2.5
54	**1320**	**1.75**	27.21	"	"	16400	-	65	1100	2.1
49.5	**1440**	**1.6**	29.69	"	"	16900	-	60	1190	1.95
41.5	**1720**	**1.35**	35.24	"	"	18300	-	50	1430	1.6
37.5	**1910**	**1.2**	39.22	"	"	19100	-	45	1590	1.45
31.5	**2250**	**1.0**	46.54	"	"	20000	-	38	1880	1.2
29	**2450**	**0.94**	50.40	"	"	20000	-	35	2000	1.15
56	**1270**	**3.3**	26.44	**BG80-../DHE13LA4**	219	17900	-	67	1060	4.0
50	**1430**	**2.9**	29.36	"	"	18900	-	60	1190	3.5
43	**1660**	**2.5**	34.22	"	"	20200	-	52	1370	3.1
38.5	**1860**	**2.3**	38.00	"	"	21300	-	46.5	1540	2.7
33.5	**2100**	**2.0**	43.94	"	"	22600	-	40.5	1760	2.4
30	**2350**	**1.8**	48.80	"	"	23800	-	36.5	1960	2.1
26	**2750**	**1.55**	57.24	"	"	25400	-	31	2300	1.85
23	**3100**	**1.35**	63.56	"	"	26000	-	28	2550	1.65
22	**3250**	**1.3**	66.40	**BG80Z-../DHE13LA4**	262	26000	-	27	2650	1.6
20	**3550**	**1.2**	73.73	"	"	26000	-	24	2950	1.4
17.5	**4050**	**1.05**	84.55	"	"	26000	-	21	3400	1.25
16	**4450**	**0.94**	93.89	"	"	26000	-	19	3750	1.1
27.5	**2600**	**3.2**	53.46	**BG90-../DHE13LA4**	308	65000	-	33	2150	3.9
26	**2750**	**2.5**	57.04	**BG90Z-../DHE13LA4**	364	65000	-	31	2300	3.0
23.5	**3000**	**2.5**	62.47	"	"	65000	-	28.5	2500	3.0
19.5	**3650**	**2.3**	76.61	"	"	65000	-	23	3100	2.7
17.5	**4050**	**2.1**	83.91	"	"	65000	-	21	3400	2.5
15.5	**4600**	**1.85**	96.53	"	"	65000	-	18.5	3850	2.2
14	**5100**	**1.65**	105.7	"	"	65000	-	17	4200	2.0
11.5	**6200**	**1.35**	127.1	"	"	65000	-	14	5100	1.65
10.5	**6800**	**1.25**	139.2	"	"	65000	-	13	5500	1.55
9.0	**7900**	**1.05**	163.0	"	"	65000	-	11	6500	1.3
8.2	**8700**	**0.97**	178.5	"	"	65000	-	9.9	7200	1.15
7.1	**10000**	**0.84**	208.3	"	"	65000	-	8.5	8400	1.0
6.7	**10300**	**0.89**	219.9	**BG90G50-../DHE13LA4**	380	65000	-	8.1	8500	1.1
14	**5100**	**3.3**	107.5	**BG100-../DHE13LA4**	480	90000	-	16.5	4300	3.9
12.5	**5700**	**2.9**	119.7	"	"	90000	-	15	4750	3.5
10.5	**6800**	**2.5**	139.1	"	"	90000	-	13	5500	3.1
9.5	**7500**	**2.2**	154.8	"	"	90000	-	11.5	6200	2.7
8.2	**8700**	**1.95**	178.6	"	"	90000	-	9.9	7200	2.3

P = 7.5 kW

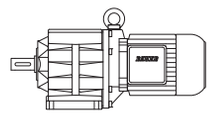

50 Hz			i	Type	m	F_{RN}	F_{RV}	60 Hz		
n_2	M_2	f_B						n_2	M_2	f_B
1/min	Nm				kg	N	N	1/min	Nm	
7.4	**9600**	**1.75**	198.8	**BG100-../DHE13LA4**	"	90000	-	8.9	8000	2.1
6.3	**11300**	**1.5**	232.6	"	"	90000	-	7.6	9400	1.8
5.7	**12500**	**1.35**	259.0	"	"	90000	-	6.8	10500	1.6
5.5	**13000**	**1.4**	269.8	**BG100Z-../DHE13LA4**	571	90000	-	6.6	10800	1.7
4.9	**14600**	**1.25**	300.4	"	"	90000	-	5.9	12100	1.55
4.3	**16600**	**1.1**	343.6	"	"	90000	-	5.2	13700	1.35
3.9	**18300**	**1.0**	382.6	"	"	90000	-	4.7	15200	1.2
3.2	**22300**	**0.83**	456.7	"	"	90000	-	3.9	18300	1.0

P = 9.5 kW

50 Hz			i	Type	m	F_{RN}	F_{RV}	60 Hz		
n_2	M_2	f_B						n_2	M_2	f_B
1/min	Nm				kg	N	N	1/min	Nm	
600	**151**	**2.0**	2.47	**BG50-../DHE16MA4**	146	2900	-	720	126	2.4
415	**215**	**1.6**	3.55	"	"	3300	-	500	181	1.9
300	**300**	**1.35**	4.91	"	"	3500	-	365	245	1.6
220	**410**	**1.1**	6.74	"	"	3750	-	265	340	1.35
169	**530**	**0.96**	8.70	"	"	5300	-	205	440	1.15
153	**590**	**0.89**	9.65	"	"	5600	-	184	490	1.05
395	**225**	**2.7**	3.74	**BG60-../DHE16MA4**	180	7100	-	475	191	3.2
300	**300**	**2.3**	4.98	"	"	7800	-	360	250	2.8
215	**420**	**1.85**	6.88	"	"	8600	-	260	345	2.3
162	**560**	**1.6**	9.13	"	"	9800	-	194	465	1.9
146	**620**	**1.45**	10.12	"	"	10200	-	175	510	1.8
121	**740**	**1.35**	12.16	"	"	10800	-	146	620	1.6
110	**820**	**1.25**	13.47	"	"	11200	-	132	680	1.5
88	**1030**	**1.1**	16.80	"	"	12000	-	106	850	1.3
79	**1140**	**1.0**	18.62	"	"	12400	-	96	940	1.2
66	**1370**	**0.88**	22.40	"	"	13300	-	80	1130	1.05
123	**730**	**3.2**	11.97	**BG70-../DHE16MA4**	214	11200	-	148	610	3.8
113	**800**	**2.9**	13.08	"	"	11600	-	136	660	3.5
95	**950**	**2.4**	15.53	"	"	12700	-	114	790	2.9
84	**1080**	**2.1**	17.68	"	"	13400	-	101	890	2.6
71	**1270**	**1.8**	20.98	"	"	14600	-	85	1060	2.2
65	**1390**	**1.65**	22.92	"	"	15100	-	78	1160	2.0
55	**1640**	**1.4**	27.21	"	"	16400	-	66	1370	1.7
50	**1810**	**1.25**	29.69	"	"	16900	-	60	1510	1.5
42	**2150**	**1.05**	35.24	"	"	18300	-	51	1770	1.3
37.5	**2400**	**0.96**	39.22	"	"	19100	-	45.5	1990	1.15
32	**2800**	**0.82**	46.54	"	"	20000	-	38.5	2350	0.98
67	**1350**	**3.1**	22.09	**BG80-../DHE16MA4**	264	16500	-	81	1120	3.8
56	**1620**	**2.6**	26.44	"	"	17900	-	67	1350	3.1
51	**1770**	**2.4**	29.36	"	"	18900	-	61	1480	2.8
43	**2100**	**2.0**	34.22	"	"	20200	-	52	1740	2.4
39	**2300**	**1.85**	38.00	"	"	21300	-	47	1930	2.2
33.5	**2700**	**1.55**	43.94	"	"	22600	-	40.5	2200	1.9
30.5	**2950**	**1.4**	48.80	"	"	23800	-	36.5	2450	1.7
26	**3450**	**1.2**	57.24	"	"	25400	-	31	2900	1.45
23.5	**3850**	**1.1**	63.56	"	"	26000	-	28	3200	1.3
22.5	**4000**	**1.05**	66.40	**BG80Z-../DHE16MA4**	307	26000	-	27	3350	1.25
20	**4500**	**0.93**	73.73	"	"	26000	-	24.5	3700	1.15
17.5	**5100**	**0.82**	84.55	"	"	26000	-	21	4300	0.98
35.5	**2550**	**3.3**	41.85	**BG90-../DHE16MA4**	354	65000	-	42.5	2100	4.0
30.5	**2950**	**2.8**	48.82	"	"	65000	-	36.5	2450	3.4
27.5	**3250**	**2.6**	53.46	"	"	65000	-	33.5	2700	3.1
26	**3450**	**1.95**	57.04	**BG90Z-../DHE16MA4**	413	65000	-	31.5	2850	2.4
24	**3750**	**2.0**	62.47	"	"	65000	-	28.5	3150	2.4

BG-series helical-geared motors

Selection helical-geared motors DHE - IE2

P = 9.5 kW

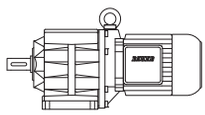

50 Hz			i	Type	m	F_{RN}	F_{RV}	60 Hz		
n_2	M_2	f_B						n_2	M_2	f_B
1/min	Nm				kg	N	N	1/min	Nm	
19.5	**4650**	**1.8**	76.61	**BG90Z-../DHE16MA4**	"	65000	-	23.5	3850	2.2
18	**5000**	**1.7**	83.91	"	"	65000	-	21.5	4200	2.0
15.5	**5800**	**1.45**	96.53	"	"	65000	-	18.5	4900	1.7
14	**6400**	**1.3**	105.7	"	"	65000	-	17	5300	1.6
12	**7500**	**1.1**	127.1	"	"	65000	-	14	6400	1.3
11	**8200**	**1.0**	139.2	"	"	65000	-	13	6900	1.2
9.1	**9900**	**0.85**	163.0	"	"	65000	-	11	8200	1.0
16.5	**5400**	**3.1**	90.02	**BG100-../DHE16MA4**	524	90000	-	20	4500	3.7
14	**6400**	**2.6**	107.5	"	"	90000	-	16.5	5400	3.1
12.5	**7200**	**2.3**	119.7	"	"	90000	-	15	6000	2.8
11	**8200**	**2.0**	139.1	"	"	90000	-	13	6900	2.4
9.5	**9500**	**1.75**	154.8	"	"	90000	-	11.5	7800	2.2
8.3	**10900**	**1.55**	178.6	"	"	90000	-	10	9000	1.85
7.4	**12200**	**1.4**	198.8	"	"	90000	-	9.0	10000	1.7
6.4	**14100**	**1.2**	232.6	"	"	90000	-	7.7	11700	1.45
5.7	**15900**	**1.05**	259.0	"	"	90000	-	6.9	13100	1.3
5.5	**16400**	**1.15**	269.8	**BG100Z-../DHE16MA4**	616	90000	-	6.6	13700	1.35
4.9	**18500**	**1.0**	300.4	"	"	90000	-	5.9	15300	1.2
4.3	**21000**	**0.88**	343.6	"	"	90000	-	5.2	17400	1.05
3.9	**23200**	**0.8**	382.6	"	"	90000	-	4.7	19300	0.96

P = 11 kW

50 Hz			i	Type	m	F_{RN}	F_{RV}	60 Hz		
n_2	M_2	f_B						n_2	M_2	f_B
1/min	Nm				kg	N	N	1/min	Nm	
600	**175**	**1.75**	2.47	**BG50-../DHE16LA4**	159	2900	-	720	145	2.1
415	**250**	**1.4**	3.55	"	"	3300	-	500	210	1.65
300	**350**	**1.15**	4.91	"	"	3500	-	365	285	1.4
220	**475**	**0.95**	6.74	"	"	3750	-	265	395	1.15
169	**620**	**0.82**	8.70	"	"	5300	-	205	510	1.0
590	**178**	**3.0**	2.52	**BG60-../DHE16LA4**	193	6200	-	710	147	3.6
395	**265**	**2.3**	3.74	"	"	7100	-	475	220	2.8
300	**350**	**1.95**	4.98	"	"	7800	-	360	290	2.4
215	**485**	**1.6**	6.88	"	"	8600	-	260	400	1.95
162	**640**	**1.4**	9.13	"	"	9800	-	194	540	1.65
146	**710**	**1.3**	10.12	"	"	10200	-	175	600	1.5
121	**860**	**1.15**	12.16	"	"	10800	-	146	710	1.4
110	**950**	**1.05**	13.47	"	"	11200	-	132	790	1.3
88	**1190**	**0.93**	16.80	"	"	12000	-	106	990	1.1
79	**1320**	**0.87**	18.62	"	"	12400	-	96	1090	1.05
146	**710**	**3.2**	10.09	**BG70-../DHE16LA4**	228	10200	-	176	590	3.9
123	**850**	**2.7**	11.97	"	"	11200	-	148	700	3.3
113	**920**	**2.5**	13.08	"	"	11600	-	136	770	3.0
95	**1100**	**2.1**	15.53	"	"	12700	-	114	920	2.5
84	**1250**	**1.85**	17.68	"	"	13400	-	101	1040	2.2
71	**1470**	**1.55**	20.98	"	"	14600	-	85	1230	1.85
65	**1610**	**1.45**	22.92	"	"	15100	-	78	1340	1.7
55	**1910**	**1.2**	27.21	"	"	16400	-	66	1590	1.45
50	**2100**	**1.1**	29.69	"	"	16900	-	60	1750	1.3
42	**2500**	**0.92**	35.24	"	"	18300	-	51	2050	1.1
37.5	**2800**	**0.82**	39.22	"	"	19100	-	45.5	2300	1.0
74	**1410**	**3.0**	19.89	**BG80-../DHE16LA4**	276	15500	-	89	1180	3.6
67	**1560**	**2.7**	22.09	"	"	16500	-	81	1290	3.3
56	**1870**	**2.2**	26.44	"	"	17900	-	67	1560	2.7
51	**2050**	**2.0**	29.36	"	"	18900	-	61	1720	2.4
43	**2400**	**1.75**	34.22	"	"	20200	-	52	2000	2.1
39	**2650**	**1.6**	38.00	"	"	21300	-	47	2200	1.9
33.5	**3100**	**1.35**	43.94	"	"	22600	-	40.5	2550	1.65
30.5	**3400**	**1.25**	48.80	"	"	23800	-	36.5	2850	1.45

P = 11 kW

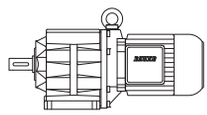

50 Hz			i	Type	m	F_{RN}	F_{RV}	60 Hz		
n_2	M_2	f_B						n_2	M_2	f_B
1/min	Nm				kg	N	N	1/min	Nm	
26	**4000**	**1.05**	57.24	**BG80-../DHE16LA4**	"	25400	-	31	3350	1.25
23.5	**4450**	**0.94**	63.56	"	"	26000	-	28	3750	1.1
22.5	**4650**	**0.9**	66.40	**BG80Z-../DHE16LA4**	320	26000	-	27	3850	1.1
20	**5200**	**0.81**	73.73	"	"	26000	-	24.5	4250	0.99
38.5	**2700**	**3.1**	38.21	**BG90-../DHE16LA4**	367	65000	-	46.5	2250	3.7
35.5	**2950**	**2.8**	41.85	"	"	65000	-	42.5	2450	3.4
30.5	**3400**	**2.5**	48.82	"	"	65000	-	36.5	2850	2.9
27.5	**3800**	**2.2**	53.46	"	"	65000	-	33.5	3100	2.7
26	**4000**	**1.7**	57.04	**BG90Z-../DHE16LA4**	426	65000	-	31.5	3300	2.1
24	**4350**	**1.7**	62.47	"	"	65000	-	28.5	3650	2.1
19.5	**5300**	**1.6**	76.61	"	"	65000	-	23.5	4450	1.9
18	**5800**	**1.45**	83.91	"	"	65000	-	21.5	4850	1.75
15.5	**6700**	**1.25**	96.53	"	"	65000	-	18.5	5600	1.5
14	**7500**	**1.1**	105.7	"	"	65000	-	17	6100	1.4
12	**8700**	**0.97**	127.1	"	"	65000	-	14	7500	1.1
11	**9500**	**0.88**	139.2	"	"	65000	-	13	8000	1.05
21	**5000**	**3.2**	70.69	**BG100-../DHE16LA4**	538	90000	-	25.5	4100	3.9
18.5	**5600**	**3.0**	80.85	"	"	90000	-	22	4750	3.5
16.5	**6300**	**2.7**	90.02	"	"	90000	-	20	5200	3.2
14	**7500**	**2.2**	107.5	"	"	90000	-	16.5	6300	2.7
12.5	**8400**	**2.0**	119.7	"	"	90000	-	15	7000	2.4
11	**9500**	**1.75**	139.1	"	"	90000	-	13	8000	2.1
9.5	**11000**	**1.55**	154.8	"	"	90000	-	11.5	9100	1.85
8.3	**12600**	**1.35**	178.6	"	"	90000	-	10	10500	1.6
7.4	**14100**	**1.2**	198.8	"	"	90000	-	9.0	11600	1.45
6.4	**16400**	**1.0**	232.6	"	"	90000	-	7.7	13600	1.25
5.7	**18400**	**0.91**	259.0	"	"	90000	-	6.9	15200	1.1
5.5	**19100**	**0.97**	269.8	**BG100Z-../DHE16LA4**	629	90000	-	6.6	15900	1.15
4.9	**21400**	**0.86**	300.4	"	"	90000	-	5.9	17800	1.05

P = 15 kW

50 Hz			i	Type	m	F_{RN}	F_{RV}	60 Hz		
n_2	M_2	f_B						n_2	M_2	f_B
1/min	Nm				kg	N	N	1/min	Nm	
600	**235**	**1.3**	2.47	**BG50-../DHE16XA4**	169	2900	-	720	198	1.55
415	**345**	**1.0**	3.55	"	"	3300	-	500	285	1.2
300	**475**	**0.84**	4.91	"	"	3500	-	365	390	1.0
590	**240**	**2.2**	2.52	**BG60-../DHE16XA4**	203	6200	-	710	200	2.7
395	**360**	**1.7**	3.74	"	"	7100	-	475	300	2.0
300	**475**	**1.45**	4.98	"	"	7800	-	360	395	1.75
215	**660**	**1.2**	6.88	"	"	8600	-	260	550	1.4
162	**880**	**1.0**	9.13	"	"	9800	-	194	730	1.2
146	**980**	**0.93**	10.12	"	"	10200	-	175	810	1.15
121	**1180**	**0.84**	12.16	"	"	10800	-	146	980	1.0
210	**680**	**3.2**	7.14	**BG70-../DHE16XA4**	238	8800	-	250	570	3.8
174	**820**	**2.8**	8.48	"	"	9500	-	210	680	3.4
146	**980**	**2.3**	10.09	"	"	10200	-	176	810	2.8
123	**1160**	**2.0**	11.97	"	"	11200	-	148	960	2.4
113	**1260**	**1.85**	13.08	"	"	11600	-	136	1050	2.2
95	**1500**	**1.55**	15.53	"	"	12700	-	114	1250	1.85
84	**1700**	**1.35**	17.68	"	"	13400	-	101	1410	1.65
71	**2000**	**1.15**	20.98	"	"	14600	-	85	1680	1.35
65	**2200**	**1.05**	22.92	"	"	15100	-	78	1830	1.25
55	**2600**	**0.88**	27.21	"	"	16400	-	66	2150	1.05
50	**2850**	**0.81**	29.69	"	"	16900	-	60	2350	0.98
95	**1500**	**2.8**	15.62	**BG80-../DHE16XA4**	286	13700	-	114	1250	3.4
85	**1680**	**2.5**	17.35	"	"	14600	-	103	1390	3.0
74	**1930**	**2.2**	19.89	"	"	15500	-	89	1600	2.6
67	**2100**	**2.0**	22.09	"	"	16500	-	81	1760	2.4

BG-series helical-geared motors

Selection helical-geared motors DHE - IE2

P = 15 kW

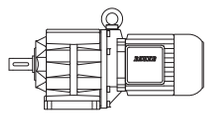

50 Hz			i	Type	m	F_{RN}	F_{RV}	60 Hz		
n_2	M_2	f_B						n_2	M_2	f_B
1/min	Nm				kg	N	N	1/min	Nm	
56	**2550**	**1.65**	26.44	**BG80-../DHE16XA4**	"	17900	-	67	2100	2.0
51	**2800**	**1.5**	29.36	"	"	18900	-	61	2300	1.85
43	**3300**	**1.25**	34.22	"	"	20200	-	52	2750	1.55
39	**3650**	**1.15**	38.00	"	"	21300	-	47	3000	1.4
33.5	**4250**	**0.99**	43.94	"	"	22600	-	40.5	3500	1.2
30.5	**4650**	**0.9**	48.80	"	"	23800	-	36.5	3900	1.1
49.5	**2850**	**2.9**	29.78	**BG90-../DHE16XA4**	377	65000	-	60	2350	3.6
45.5	**3100**	**2.7**	32.62	"	"	65000	-	55	2600	3.2
38.5	**3700**	**2.3**	38.21	"	"	65000	-	46.5	3050	2.8
35.5	**4000**	**2.1**	41.85	"	"	65000	-	42.5	3350	2.5
30.5	**4650**	**1.8**	48.82	"	"	65000	-	36.5	3900	2.2
27.5	**5200**	**1.6**	53.46	"	"	65000	-	33.5	4250	2.0
26	**5500**	**1.25**	57.04	**BG90Z-../DHE16XA4**	436	65000	-	31.5	4500	1.5
24	**5900**	**1.25**	62.47	"	"	65000	-	28.5	5000	1.5
19.5	**7300**	**1.15**	76.61	"	"	65000	-	23.5	6000	1.4
18	**7900**	**1.05**	83.91	"	"	65000	-	21.5	6600	1.25
15.5	**9200**	**0.91**	96.53	"	"	65000	-	18.5	7700	1.1
14	**10200**	**0.82**	105.7	"	"	65000	-	17	8400	1.0
32	**4450**	**3.2**	46.43	**BG100-../DHE16XA4**	548	90000	-	38.5	3700	3.8
28.5	**5000**	**2.9**	51.70	"	"	90000	-	34.5	4150	3.5
23.5	**6000**	**2.6**	63.49	"	"	90000	-	28	5100	3.0
21	**6800**	**2.3**	70.69	"	"	90000	-	25.5	5600	2.8
18.5	**7700**	**2.1**	80.85	"	"	90000	-	22	6500	2.5
16.5	**8600**	**1.95**	90.02	"	"	90000	-	20	7100	2.4
14	**10200**	**1.65**	107.5	"	"	90000	-	16.5	8600	1.95
12.5	**11400**	**1.45**	119.7	"	"	90000	-	15	9500	1.75
11	**13000**	**1.3**	139.1	"	"	90000	-	13	11000	1.55
9.5	**15000**	**1.1**	154.8	"	"	90000	-	11.5	12400	1.35
8.3	**17200**	**0.98**	178.6	"	"	90000	-	10	14300	1.15
7.4	**19300**	**0.87**	198.8	"	"	90000	-	9.0	15900	1.05

P = 18.5 kW

50 Hz			i	Type	m	F_{RN}	F_{RV}	60 Hz		
n_2	M_2	f_B						n_2	M_2	f_B
1/min	Nm				kg	N	N	1/min	Nm	
600	**290**	**1.05**	2.47	**BG50-../DHE18LA4**	237	2900	-	720	245	1.25
415	**425**	**0.82**	3.55	"	"	3300	-	500	350	0.99
590	**295**	**1.8**	2.52	**BG60-../DHE18LA4**	266	6200	-	710	245	2.2
395	**445**	**1.4**	3.74	"	"	7100	-	475	370	1.65
300	**580**	**1.2**	4.98	"	"	7800	-	360	490	1.4
215	**820**	**0.95**	6.88	"	"	8600	-	260	670	1.15
162	**1090**	**0.81**	9.13	"	"	9800	-	194	910	0.98
300	**580**	**2.6**	4.95	**BG70-../DHE18LA4**	294	6900	-	360	490	3.1
255	**690**	**2.5**	5.87	"	"	8200	-	305	570	3.1
210	**840**	**2.6**	7.14	"	"	8800	-	250	700	3.1
174	**1010**	**2.3**	8.48	"	"	9500	-	210	840	2.7
146	**1210**	**1.9**	10.09	"	"	10200	-	176	1000	2.3
123	**1430**	**1.6**	11.97	"	"	11200	-	148	1190	1.95
113	**1560**	**1.45**	13.08	"	"	11600	-	136	1290	1.8
95	**1850**	**1.25**	15.53	"	"	12700	-	114	1540	1.5
84	**2100**	**1.1**	17.68	"	"	13400	-	101	1740	1.3
71	**2450**	**0.94**	20.98	"	"	14600	-	85	2050	1.1
65	**2700**	**0.85**	22.92	"	"	15100	-	78	2250	1.0
129	**1360**	**3.1**	11.43	**BG80-../DHE18LA4**	348	11600	-	155	1130	3.7
116	**1520**	**2.8**	12.69	"	"	12400	-	140	1260	3.3
95	**1850**	**2.3**	15.62	"	"	13700	-	114	1540	2.7
85	**2050**	**2.0**	17.35	"	"	14600	-	103	1710	2.5
74	**2350**	**1.8**	19.89	"	"	15500	-	89	1980	2.1

P = 18.5 kW

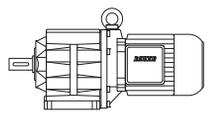

50 Hz			i	Type	m	F_{RN}	F_{RV}	60 Hz		
n_2	M_2	f_B						n_2	M_2	f_B
1/min	Nm				kg	N	N	1/min	Nm	
67	**2600**	**1.6**	22.09	**BG80-../DHE18LA4**	"	16500	-	81	2150	1.95
56	**3150**	**1.35**	26.44	"	"	17900	-	67	2600	1.6
51	**3450**	**1.2**	29.36	"	"	18900	-	61	2850	1.45
43	**4100**	**1.0**	34.22	"	"	20200	-	52	3350	1.25
39	**4500**	**0.93**	38.00	"	"	21300	-	47	3750	1.1
33.5	**5200**	**0.81**	43.94	"	"	22600	-	40.5	4350	0.97
65	**2700**	**3.1**	22.62	**BG90-../DHE18LA4**	440	65000	-	79	2200	3.8
60	**2900**	**2.9**	24.78	"	"	65000	-	72	2450	3.4
49.5	**3550**	**2.4**	29.78	"	"	65000	-	60	2900	2.9
45.5	**3850**	**2.2**	32.62	"	"	65000	-	55	3200	2.6
38.5	**4550**	**1.85**	38.21	"	"	65000	-	46.5	3750	2.2
35.5	**4950**	**1.7**	41.85	"	"	65000	-	42.5	4150	2.0
30.5	**5700**	**1.45**	48.82	"	"	65000	-	36.5	4800	1.75
27.5	**6400**	**1.3**	53.46	"	"	65000	-	33.5	5200	1.6
26	**6700**	**1.0**	57.04	**BG90Z-../DHE18LA4**	493	65000	-	31.5	5600	1.2
24	**7300**	**1.05**	62.47	"	"	65000	-	28.5	6100	1.25
19.5	**9000**	**0.93**	76.61	"	"	65000	-	23.5	7500	1.1
18	**9800**	**0.86**	83.91	"	"	65000	-	21.5	8200	1.0
44	**4000**	**3.2**	33.71	**BG100-../DHE18LA4**	609	88500	-	53	3300	3.9
39.5	**4450**	**3.0**	37.54	"	"	90000	-	47.5	3700	3.6
32	**5500**	**2.6**	46.43	"	"	90000	-	38.5	4550	3.1
28.5	**6100**	**2.4**	51.70	"	"	90000	-	34.5	5100	2.8
23.5	**7500**	**2.1**	63.49	"	"	90000	-	28	6300	2.4
21	**8400**	**1.9**	70.69	"	"	90000	-	25.5	6900	2.3
18.5	**9500**	**1.75**	80.85	"	"	90000	-	22	8000	2.1
16.5	**10700**	**1.55**	90.02	"	"	90000	-	20	8800	1.9
14	**12600**	**1.35**	107.5	"	"	90000	-	16.5	10700	1.55
12.5	**14100**	**1.2**	119.7	"	"	90000	-	15	11700	1.45
11	**16000**	**1.05**	139.1	"	"	90000	-	13	13500	1.25
9.5	**18500**	**0.91**	154.8	"	"	90000	-	11.5	15300	1.1

P = 22 kW

50 Hz			i	Type	m	F_{RN}	F_{RV}	60 Hz		
n_2	M_2	f_B						n_2	M_2	f_B
1/min	Nm				kg	N	N	1/min	Nm	
600	**350**	**0.87**	2.47	**BG50-../DHE18XA4**	255	2900	-	720	290	1.05
590	**355**	**1.5**	2.52	**BG60-../DHE18XA4**	284	6200	-	710	295	1.8
395	**530**	**1.15**	3.74	"	"	7100	-	475	440	1.4
300	**700**	**0.98**	4.98	"	"	7800	-	360	580	1.2
215	**970**	**0.8**	6.88	"	"	8600	-	260	800	0.98
300	**700**	**2.1**	4.95	**BG70-../DHE18XA4**	312	6900	-	360	580	2.6
255	**820**	**2.1**	5.87	"	"	8200	-	305	680	2.6
210	**1000**	**2.2**	7.14	"	"	8800	-	250	840	2.6
174	**1200**	**1.9**	8.48	"	"	9500	-	210	1000	2.3
146	**1430**	**1.6**	10.09	"	"	10200	-	176	1190	1.95
123	**1700**	**1.35**	11.97	"	"	11200	-	148	1410	1.65
113	**1850**	**1.25**	13.08	"	"	11600	-	136	1540	1.5
95	**2200**	**1.05**	15.53	"	"	12700	-	114	1840	1.25
84	**2500**	**0.92**	17.68	"	"	13400	-	101	2050	1.1
250	**840**	**3.2**	5.94	**BG80-../DHE18XA4**	366	8300	-	300	700	3.8
225	**930**	**3.2**	6.60	"	"	9100	-	270	770	3.8
178	**1180**	**3.2**	8.30	"	"	10400	-	215	970	3.9
160	**1310**	**3.0**	9.21	"	"	10800	-	193	1080	3.6
129	**1620**	**2.6**	11.43	"	"	11600	-	155	1350	3.1
116	**1810**	**2.3**	12.69	"	"	12400	-	140	1500	2.8
95	**2200**	**1.9**	15.62	"	"	13700	-	114	1840	2.3
85	**2450**	**1.7**	17.35	"	"	14600	-	103	2000	2.1
74	**2800**	**1.5**	19.89	"	"	15500	-	89	2350	1.8
67	**3100**	**1.35**	22.09	"	"	16500	-	81	2550	1.65
56	**3750**	**1.1**	26.44	"	"	17900	-	67	3100	1.35

BG-series helical-geared motors

Selection helical-geared motors DHE - IE2

P = 22 kW

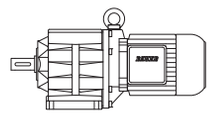

50 Hz			i	Type	m	F_{RN}	F_{RV}	60 Hz		
n_2	M_2	f_B						n_2	M_2	f_B
1/min	Nm				kg	N	N	1/min	Nm	
51	**4100**	**1.0**	29.36	**BG80-../DHE18XA4**	"	18900	-	61	3400	1.25
43	**4850**	**0.87**	34.22	"	"	20200	-	52	4000	1.05
82	**2550**	**3.2**	17.96	**BG90-../DHE18XA4**	458	59800	-	99	2100	3.9
75	**2800**	**3.0**	19.67	"	"	62400	-	90	2300	3.7
65	**3200**	**2.6**	22.62	"	"	65000	-	79	2650	3.2
60	**3500**	**2.4**	24.78	"	"	65000	-	72	2900	2.9
49.5	**4200**	**2.0**	29.78	"	"	65000	-	60	3500	2.4
45.5	**4600**	**1.85**	32.62	"	"	65000	-	55	3800	2.2
38.5	**5400**	**1.55**	38.21	"	"	65000	-	46.5	4500	1.85
35.5	**5900**	**1.4**	41.85	"	"	65000	-	42.5	4900	1.7
30.5	**6800**	**1.25**	48.82	"	"	65000	-	36.5	5700	1.45
27.5	**7600**	**1.1**	53.46	"	"	65000	-	33.5	6200	1.35
26	**8000**	**0.85**	57.04	**BG90Z-../DHE18XA4**	511	65000	-	31.5	6600	1.05
24	**8700**	**0.86**	62.47	"	"	65000	-	28.5	7300	1.05
44	**4750**	**2.7**	33.71	**BG100-../DHE18XA4**	627	88500	-	53	3950	3.3
39.5	**5300**	**2.5**	37.54	"	"	90000	-	47.5	4400	3.0
32	**6500**	**2.2**	46.43	"	"	90000	-	38.5	5400	2.6
28.5	**7300**	**2.0**	51.70	"	"	90000	-	34.5	6000	2.4
23.5	**8900**	**1.75**	63.49	"	"	90000	-	28	7500	2.1
21	**10000**	**1.6**	70.69	"	"	90000	-	25.5	8200	1.95
18.5	**11300**	**1.45**	80.85	"	"	90000	-	22	9500	1.75
16.5	**12700**	**1.3**	90.02	"	"	90000	-	20	10500	1.6
14	**15000**	**1.1**	107.5	"	"	90000	-	16.5	12700	1.3
12.5	**16800**	**1.0**	119.7	"	"	90000	-	15	14000	1.2
11	**19100**	**0.88**	139.1	"	"	90000	-	13	16100	1.05

P = 30 kW

50 Hz			i	Type	m	F_{RN}	F_{RV}	60 Hz		
n_2	M_2	f_B						n_2	M_2	f_B
1/min	Nm				kg	N	N	1/min	Nm	
300	**950**	**1.55**	4.95	**BG70-../DHENF20LG4**	496	6900	-	365	780	1.9
255	**1120**	**1.55**	5.87	"	"	8200	-	305	930	1.9
210	**1360**	**1.6**	7.14	"	"	8800	-	255	1120	1.95
175	**1630**	**1.4**	8.48	"	"	9500	-	215	1330	1.7
147	**1940**	**1.2**	10.09	"	"	10200	-	178	1600	1.45
124	**2300**	**1.0**	11.97	"	"	11200	-	150	1910	1.2
114	**2500**	**0.92**	13.08	"	"	11600	-	137	2050	1.1
250	**1140**	**2.3**	5.94	**BG80-../DHENF20LG4**	553	8300	-	305	930	2.8
225	**1270**	**2.3**	6.60	"	"	9100	-	275	1040	2.8
179	**1600**	**2.4**	8.30	"	"	10400	-	220	1300	2.9
161	**1770**	**2.2**	9.21	"	"	10800	-	195	1460	2.7
130	**2200**	**1.9**	11.43	"	"	11600	-	157	1820	2.3
117	**2400**	**1.75**	12.69	"	"	12400	-	142	2000	2.1
95	**3000**	**1.4**	15.62	"	"	13700	-	115	2450	1.7
86	**3300**	**1.25**	17.35	"	"	14600	-	104	2750	1.55
75	**3800**	**1.1**	19.89	"	"	15500	-	90	3150	1.35
67	**4250**	**0.99**	22.09	"	"	16500	-	82	3450	1.2
56	**5100**	**0.82**	26.44	"	"	17900	-	68	4200	1.0
136	**2100**	**3.3**	10.90	**BG90-../DHENF20LG4**	643	52300	-	165	1730	4.1
111	**2550**	**2.9**	13.37	"	"	55000	-	134	2100	3.6
102	**2800**	**2.8**	14.64	"	"	57000	-	123	2300	3.4
83	**3450**	**2.4**	17.96	"	"	59800	-	100	2850	2.9
76	**3750**	**2.2**	19.67	"	"	62400	-	92	3100	2.7
66	**4300**	**1.95**	22.62	"	"	65000	-	80	3550	2.4
60	**4750**	**1.75**	24.78	"	"	65000	-	73	3900	2.2
50	**5700**	**1.45**	29.78	"	"	65000	-	61	4650	1.8
45.5	**6200**	**1.35**	32.62	"	"	65000	-	55	5200	1.6
39	**7300**	**1.15**	38.21	"	"	65000	-	47	6000	1.4
35.5	**8000**	**1.05**	41.85	"	"	65000	-	43	6600	1.25
30.5	**9300**	**0.9**	48.82	"	"	65000	-	37	7700	1.1
28	**10200**	**0.82**	53.46	"	"	65000	-	33.5	8500	0.99

P = 30 kW

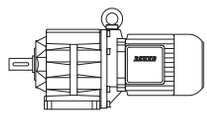

50 Hz			i	Type	m	F_{RN}	F_{RV}	60 Hz		
n_2	M_2	f_B						n_2	M_2	f_B
1/min	Nm				kg	N	N	1/min	Nm	
119	**2400**	**3.0**	12.45	**BG100-../DHENF20LG4**	814	72100	-	144	1980	3.7
86	**3300**	**3.1**	17.39	"	"	82400	-	103	2750	3.7
62	**4600**	**2.4**	23.95	"	"	87900	-	75	3800	3.0
44	**6500**	**2.0**	33.71	"	"	88500	-	54	5300	2.4
39.5	**7200**	**1.85**	37.54	"	"	90000	-	48	5900	2.2
32	**8900**	**1.6**	46.43	"	"	90000	-	39	7300	1.95
29	**9800**	**1.45**	51.70	"	"	90000	-	35	8100	1.8
23.5	**12100**	**1.25**	63.49	"	"	90000	-	28.5	10000	1.55
21	**13600**	**1.15**	70.69	"	"	90000	-	25.5	11200	1.4
18.5	**15400**	**1.05**	80.85	"	"	90000	-	22.5	12700	1.3
16.5	**17300**	**0.97**	90.02	"	"	90000	-	20	14300	1.15
14	**20400**	**0.82**	107.5	"	"	90000	-	17	16800	1.0

P = 37 kW

50 Hz			i	Type	m	F_{RN}	F_{RV}	60 Hz		
n_2	M_2	f_B						n_2	M_2	f_B
1/min	Nm				kg	N	N	1/min	Nm	
300	**1170**	**1.3**	4.95	**BG70-..-C/DHENF22SG4**	611	6900	-	365	960	1.55
255	**1380**	**1.25**	5.87	"	"	8200	-	305	1150	1.55
210	**1680**	**1.3**	7.14	"	"	8800	-	255	1380	1.55
175	**2000**	**1.15**	8.48	"	"	9500	-	215	1640	1.4
250	**1410**	**1.9**	5.94	**BG80-..-C/DHENF22SG4**	670	8300	-	305	1150	2.3
225	**1570**	**1.9**	6.60	"	"	9100	-	275	1280	2.3
179	**1970**	**1.9**	8.30	"	"	10400	-	220	1600	2.4
161	**2150**	**1.85**	9.21	"	"	10800	-	195	1810	2.2
130	**2700**	**1.55**	11.43	"	"	11600	-	157	2250	1.85
117	**3000**	**1.4**	12.69	"	"	12400	-	142	2450	1.7
95	**3700**	**1.15**	15.62	"	"	13700	-	115	3050	1.4
86	**4100**	**1.0**	17.35	"	"	14600	-	104	3350	1.25
186	**1890**	**3.3**	7.97	**BG90-..-C/DHENF22SG4**	761	47900	-	225	1570	4.0
149	**2350**	**2.9**	9.95	"	"	50500	-	180	1960	3.5
136	**2550**	**2.7**	10.90	"	"	52300	-	165	2100	3.3
111	**3150**	**2.4**	13.37	"	"	55000	-	134	2600	2.9
102	**3450**	**2.2**	14.64	"	"	57000	-	123	2850	2.7
83	**4250**	**1.95**	17.96	"	"	59800	-	100	3500	2.4
76	**4600**	**1.85**	19.67	"	"	62400	-	92	3800	2.2
66	**5300**	**1.6**	22.62	"	"	65000	-	80	4400	1.9
60	**5800**	**1.45**	24.78	"	"	65000	-	73	4800	1.75
50	**7000**	**1.2**	29.78	"	"	65000	-	61	5700	1.45
45.5	**7700**	**1.1**	32.62	"	"	65000	-	55	6400	1.3
119	**2950**	**2.5**	12.45	**BG100-..-C/DHENF22SG4**	932	72100	-	144	2450	3.0
86	**4100**	**2.5**	17.39	"	"	82400	-	103	3400	3.0
62	**5600**	**2.0**	23.95	"	"	87900	-	75	4700	2.4
44	**8000**	**1.6**	33.71	"	"	88500	-	54	6500	2.0
39.5	**8900**	**1.5**	37.54	"	"	90000	-	48	7300	1.8
32	**11000**	**1.3**	46.43	"	"	90000	-	39	9000	1.55
29	**12100**	**1.2**	51.70	"	"	90000	-	35	10000	1.45
23.5	**15000**	**1.05**	63.49	"	"	90000	-	28.5	12300	1.25

P = 45 kW

50 Hz			i	Type	m	F_{RN}	F_{RV}	60 Hz		
n_2	M_2	f_B						n_2	M_2	f_B
1/min	Nm				kg	N	N	1/min	Nm	
300	**1430**	**1.05**	4.95	**BG70-..-C/DHENF22MG4**	651	6900	-	365	1170	1.3
255	**1680**	**1.05**	5.87	"	"	8200	-	305	1400	1.25
210	**2000**	**1.1**	7.14	"	"	8800	-	255	1680	1.3
250	**1710**	**1.55**	5.94	**BG80-..-C/DHENF22MG4**	710	8300	-	305	1400	1.9
225	**1910**	**1.55**	6.60	"	"	9100	-	275	1560	1.9
179	**2400**	**1.55**	8.30	"	"	10400	-	220	1950	1.95
161	**2650**	**1.5**	9.21	"	"	10800	-	195	2200	1.8
130	**3300**	**1.25**	11.43	"	"	11600	-	157	2700	1.55

BG-series helical-geared motors

Selection helical-geared motors DHE - IE2

P = 45 kW

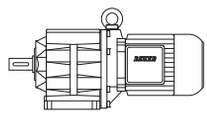

50 Hz			i	Type	m	F_{RN}	F_{RV}	60 Hz		
n_2	M_2	f_B						n_2	M_2	f_B
1/min	Nm				kg	N	N	1/min	Nm	
117	**3650**	**1.15**	12.69	**BG80-..-C/DHENF22MG4**	"	12400	-	142	3000	1.4
230	**1860**	**3.2**	6.46	**BG90-..-C/DHENF22MG4**	801	44200	-	280	1530	3.9
205	**2050**	**3.0**	7.28	"	"	46300	-	250	1710	3.6
186	**2300**	**2.7**	7.97	"	"	47900	-	225	1910	3.3
149	**2850**	**2.4**	9.95	"	"	50500	-	180	2350	2.9
136	**3150**	**2.2**	10.90	"	"	52300	-	165	2600	2.7
111	**3850**	**1.95**	13.37	"	"	55000	-	134	3200	2.3
102	**4200**	**1.85**	14.64	"	"	57000	-	123	3450	2.2
83	**5100**	**1.6**	17.96	"	"	59800	-	100	4250	1.95
76	**5600**	**1.5**	19.67	"	"	62400	-	92	4650	1.8
66	**6500**	**1.3**	22.62	"	"	65000	-	80	5300	1.6
60	**7100**	**1.2**	24.78	"	"	65000	-	73	5800	1.45
119	**3600**	**2.0**	12.45	**BG100-..-C/DHENF22MG4**	972	72100	-	144	2950	2.5
86	**4950**	**2.0**	17.39	"	"	82400	-	103	4150	2.4
62	**6900**	**1.65**	23.95	"	"	87900	-	75	5700	1.95
44	**9700**	**1.35**	33.71	"	"	88500	-	54	7900	1.65
39.5	**10800**	**1.2**	37.54	"	"	90000	-	48	8900	1.5
32	**13400**	**1.05**	46.43	"	"	90000	-	39	11000	1.3

P = 55 kW

50 Hz			i	Type	m	F_{RN}	F_{RV}	60 Hz		
n_2	M_2	f_B						n_2	M_2	f_B
1/min	Nm				kg	N	N	1/min	Nm	
250	**2100**	**1.25**	5.94	**BG80-..-C/DHENF25SG4**	766	8300	-	305	1720	1.55
225	**2300**	**1.3**	6.60	"	"	9100	-	275	1910	1.55
179	**2900**	**1.3**	8.30	"	"	10400	-	220	2350	1.6
161	**3250**	**1.2**	9.21	"	"	10800	-	195	2650	1.5
130	**4000**	**1.05**	11.43	"	"	11600	-	157	3300	1.25
255	**2050**	**2.8**	5.90	**BG90-..-C/DHENF25SG4**	857	43000	-	305	1720	3.4
230	**2250**	**2.6**	6.46	"	"	44200	-	280	1870	3.2
205	**2550**	**2.4**	7.28	"	"	46300	-	250	2100	2.9
186	**2800**	**2.3**	7.97	"	"	47900	-	225	2300	2.7
149	**3500**	**1.95**	9.95	"	"	50500	-	180	2900	2.4
136	**3850**	**1.8**	10.90	"	"	52300	-	165	3150	2.2
111	**4700**	**1.6**	13.37	"	"	55000	-	134	3900	1.95
102	**5100**	**1.5**	14.64	"	"	57000	-	123	4250	1.8
83	**6300**	**1.3**	17.96	"	"	59800	-	100	5200	1.6
76	**6900**	**1.2**	19.67	"	"	62400	-	92	5700	1.45
66	**7900**	**1.05**	22.62	"	"	65000	-	80	6500	1.3
119	**4400**	**1.65**	12.45	**BG100-..-C/DHENF25SG4**	1028	72100	-	144	3600	2.0
86	**6100**	**1.65**	17.39	"	"	82400	-	103	5000	2.0
62	**8400**	**1.35**	23.95	"	"	87900	-	75	7000	1.6
44	**11900**	**1.1**	33.71	"	"	88500	-	54	9700	1.35
39.5	**13200**	**1.0**	37.54	"	"	90000	-	48	10900	1.2

P = 75 kW

50 Hz			i	Type	m	F_{RN}	F_{RV}	60 Hz		
n_2	M_2	f_B						n_2	M_2	f_B
1/min	Nm				kg	N	N	1/min	Nm	
255	**2800**	**2.1**	5.90	**BG90-..-C/DHENF25MG4**	857	43000	-	305	2300	2.5
230	**3100**	**1.9**	6.46	"	"	44200	-	280	2550	2.3
205	**3450**	**1.8**	7.28	"	"	46300	-	250	2850	2.2
186	**3850**	**1.65**	7.97	"	"	47900	-	225	3150	2.0
149	**4800**	**1.4**	9.95	"	"	50500	-	180	3950	1.75
136	**5200**	**1.35**	10.90	"	"	52300	-	165	4300	1.65
111	**6400**	**1.15**	13.37	"	"	55000	-	134	5300	1.4
102	**7000**	**1.1**	14.64	"	"	57000	-	123	5800	1.35
119	**6000**	**1.2**	12.45	**BG100-..-C/DHENF25MG4**	1028	72100	-	144	4950	1.45
86	**8300**	**1.2**	17.39	"	"	82400	-	103	6900	1.45

M = 20 .. 45 Nm

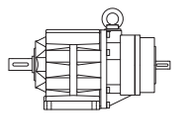

50 Hz			i	Type	F_{RN}	F_{RV}	permissible input speed [1/min]	
n_2	M_2	M_1					for mounting position	
(4 pole)	f_B=1,0						H1,H2,H3,H4,H5,B5,V1	H6,V3,V6
1/min	Nm	Nm			N	N	B3,B6,B7,B8,V5	
21	45	0,7	66,79	**BG06-..-SN**	1070		3600	1800
23	45	0,7	61,22	"	1020		"	"
24	45	0,8	57,34	"	1000		"	"
27	45	0,9	52,56	"	950		"	"
28	45	0,9	50,38	"	940		"	"
30	45	1	46,19	"	890		"	"
35	45	1,1	40,26	"	890		"	"
38	45	1,2	36,91	"	890		"	"
40	45	1,3	35,15	"	880		"	"
43	45	1,4	32,22	"	890		"	"
50	45	1,6	27,8	"	840		"	"
55	45	1,8	25,48	"	850		"	"
62	43	1,9	22,71	"	810		"	"
67	40	1,9	20,82	"	800		"	"
74	40	2,1	18,98	"	770		"	"
80	38	2,2	17,4	"	760		"	"
87	35	2,2	16,13	"	740		"	"
95	34	2,3	14,78	"	730		"	"
108	33	2,5	12,98	"	600		"	"
114	33	2,7	12,3	"	670		"	"
124	32	2,8	11,28	"	670		"	"
137	31	3	10,24	"	640		"	"
149	30	3,2	9,38	"	640		"	"
167	28	3,3	8,39	"	600		"	"
200	26	3,7	7,01	"	580		"	"
235	24	4	5,96	"	570		"	"
308	22	4,8	4,54	"	530		"	"
370	20	5,3	3,78	"	520		"	"

M = 56 .. 120 Nm

50 Hz			i	Type	F_{RN}	F_{RV}	permissible input speed [1/min]	
n_2	M_2	M_1					for mounting position	
(4 pole)	f_B=1,0						H1,H2,H3,H4,H5,B5,V1	H6,V3,V6
1/min	Nm	Nm			N	N	B3,B6,B7,B8,V5	
19	120	1,6	73,13	**BG10-..-SN**	2000	2800	3600	1800
21	120	1,8	66	"	2000	2800	"	"
22	120	1,9	63,69	"	2000	2800	"	"
24	120	2,1	57,48	"	2000	2800	"	"
27	120	2,3	51,57	"	2000	2800	"	"
30	120	2,6	46,55	"	1920	2650	"	"
32	120	2,7	43,99	"	1880	2600	"	"
35	120	3	39,7	"	1780	2450	"	"
40	120	3,4	34,92	"	1690	2350	"	"
44	120	3,8	31,52	"	1600	2200	"	"
48	120	4,1	29,09	"	1540	2150	"	"
53	120	4,6	26,26	"	1460	2000	"	"
57	120	4,9	24,42	"	1410	1970	"	"
64	120	5,4	22,04	"	1330	1860	"	"
68	120	5,9	20,51	"	1290	1800	"	"
76	120	6,5	18,51	"	1210	1690	"	"
87	117	7,2	16,15	"	1140	1590	"	"
96	114	7,8	14,58	"	1100	1540	"	"
106	110	8,3	13,21	"	1070	1490	"	"
117	105	8,8	11,92	"	1030	1440	"	"
135	99	10	10,34	"	1000	1400	"	"
150	97	10	9,33	"	950	1330	"	"
173	88	11	8,07	"	660	920	"	"
206	81	12	6,78	"	660	920	"	"
262	75	14	5,34	"	620	910	"	"
321	68	16	4,36	"	650	910	"	"
409	62	18	3,42	"	630	880	"	"
556	56	22	2,52	"	570	790	"	"

BG-series helical-geared motors

Selection helical-geared motors with SN input

M = 84 .. 200 Nm

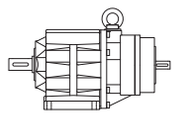

50 Hz			i	Type	F_{RN}	F_{RV}	permissible input speed [1/min]	
n_2	M_2	M_1					for mounting position	
(4 pole)	f_B=1,0						H1,H2,H3,H4,H5,B5,V1	H6,V3,V6
1/min	Nm	Nm			N	N	B3,B6,B7,B8,V5	
21	200	3	65,62	**BG20-..-SN**	5000		3600	1800
24	200	3,4	59,07	"	5000		"	"
26	200	3,8	53,22	"	4950		"	"
29	200	4,2	47,92	"	4750		"	"
30	200	4,3	46,38	"	4700		"	"
34	200	4,8	41,76	"	4500		"	"
38	200	5,4	37,02	"	4300		"	"
42	200	6	33,33	"	4100		"	"
45	200	6,5	30,94	"	4000		"	"
50	200	7,2	27,85	"	3800		"	"
54	200	7,8	25,79	"	3700		"	"
60	200	8,6	23,22	"	3550		"	"
63	200	9	22,16	"	3500		"	"
70	195	10	19,95	"	3350		"	"
81	183	11	17,31	"	3200		"	"
90	177	11	15,58	"	3100		"	"
95	172	12	14,67	"	3050		"	"
106	167	13	13,21	"	2900		"	"
120	158	13	11,71	"	2800		"	"
133	154	15	10,54	"	2700		"	"
145	122	13	9,65	"	2250		"	"
157	143	16	8,91	"	2600		"	"
169	122	15	8,29	"	2250		"	"
175	137	17	8,02	"	2500		"	"
216	122	19	6,48	"	2250		"	"
255	115	21	5,49	"	2100		"	"
320	104	24	4,38	"	1990		"	"
420	92	28	3,33	"	1830		"	"
556	84	33	2,52	"	1650		"	"

M = 128 .. 300 Nm

50 Hz			i	Type	F_{RN}	F_{RV}	permissible input speed [1/min]	
n_2	M_2	M_1					for mounting position	
(4 pole)	f_B=1,0						H1,H2,H3,H4,H5,B5,V1	H6,V3,V6
1/min	Nm	Nm			N	N	B3,B6,B7,B8,V5	
21	300	4,4	67,44	**BG30-..-SN**	6000		3600	1800
23	300	4,9	60,79	"	6000		"	"
24	300	5,2	58,18	"	6000		"	"
27	300	5,7	52,44	"	6000		"	"
30	300	6,4	47,11	"	6000		"	"
33	300	7,1	42,46	"	5900		"	"
36	300	7,7	39,02	"	5800		"	"
40	300	8,5	35,17	"	5500		"	"
42	300	9,1	33,09	"	5400		"	"
47	300	10	29,83	"	5200		"	"
50	300	11	28,24	"	5100		"	"
55	300	12	25,45	"	4850		"	"
63	300	14	22,18	"	4600		"	"
70	300	15	19,99	"	4200		"	"
74	300	16	18,93	"	4100		"	"
82	300	18	17,06	"	3700		"	"
92	300	20	15,27	"	3450		"	"
102	290	21	13,77	"	3150		"	"
118	270	23	11,82	"	3200		"	"
131	265	25	10,65	"	2950		"	"
147	250	26	9,55	"	3000		"	"
163	245	28	8,6	"	2800		"	"
177	215	27	7,91	"	1760		"	"
207	215	32	6,75	"	1760		"	"
257	200	37	5,44	"	1670		"	"
333	171	41	4,21	"	1630		"	"
412	139	41	3,4	"	1580		"	"
524	128	48	2,67	"	1450		"	"

M = 202 .. 425 Nm

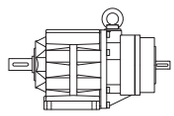

50 Hz			i	Type	F_{RN}	F_{RV}	permissible input speed [1/min] for mounting position	
n_2 (4 pole) 1/min	M_2 f_B=1,0 Nm	M_1 Nm			N	N	H1,H2,H3,H4,H5,B5,V1 B3,B6,B7,B8,V5	H6,V3,V6
21	425	6,4	66,2	**BG40-..-SN**	7000		3600	1800
23	425	7,1	59,64	"	7000		"	"
26	425	7,9	53,69	"	7000		"	"
29	425	8,8	48,36	"	7000		"	"
31	425	10	44,62	"	7000		"	"
35	425	11	40,19	"	7000		"	"
37	425	11	37,96	"	7000		"	"
41	425	12	34,2	"	7000		"	"
43	425	13	32,57	"	7000		"	"
48	425	14	29,34	"	6800		"	"
54	425	16	26,01	"	6500		"	"
60	425	18	23,43	"	6200		"	"
64	425	19	22,02	"	6000		"	"
71	425	21	19,84	"	5800		"	"
77	425	23	18,19	"	5600		"	"
85	425	26	16,39	"	5300		"	"
98	420	29	14,28	"	4900		"	"
109	410	32	12,86	"	4500		"	"
122	385	34	11,49	"	4600		"	"
135	375	36	10,35	"	4350		"	"
152	355	38	9,23	"	4350		"	"
156	295	33	9	"	2650		"	"
168	340	41	8,31	"	4100		"	"
184	295	39	7,62	"	2650		"	"
223	295	47	6,29	"	2600		"	"
283	265	54	4,94	"	2450		"	"
353	240	60	3,97	"	2400		"	"
439	220	69	3,19	"	2350		"	"
569	202	82	2,46	"	2150		"	"

M = 306 .. 630 Nm

50 Hz			i	Type	F_{RN}	F_{RV}	permissible input speed [1/min] for mounting position	
n_2 (4 pole) 1/min	M_2 f_B=1,0 Nm	M_1 Nm			N	N	H1,H2,H3,H4,H5,B5,V1 B3,B6,B7,B8,V5	H6,V3,V6
21	630	10	65,86	**BG50-..-SN**	10000		3600	1800
24	630	11	59,42	"	10000		"	"
27	630	12	52,12	"	10000		"	"
30	630	13	47,02	"	10000		"	"
33	630	15	42	"	10000		"	"
37	630	17	37,89	"	10000		"	"
43	630	19	32,84	"	8700		"	"
47	630	21	29,62	"	8000		"	"
58	630	26	24,34	"	8700		"	"
64	630	29	21,96	"	8000		"	"
76	630	34	18,33	"	7200		"	"
85	630	38	16,53	"	6500		"	"
105	590	44	13,36	"	6100		"	"
116	570	47	12,06	"	5700		"	"
145	520	54	9,65	"	5600		"	"
161	500	57	8,7	"	5300		"	"
208	450	67	6,74	"	3750		"	"
285	395	80	4,91	"	3500		"	"
394	345	97	3,55	"	3300		"	"
567	306	124	2,47	"	2900		"	"

BG-series helical-geared motors

Selection helical-geared motors with SN input

M =535 .. 1200 Nm

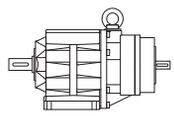

50 Hz			i	Type	F_{RN}	F_{RV}	permissible input speed [1/min]	
n_2	M_2	M_1					for mounting position	
(4 pole)	f_B=1,0						H1,H2,H3,H4,H5,B5,V1	H6,V3,V6
1/min	Nm	Nm			N	N	B3,B6,B7,B8,V5	
21	1200	18	67,49	**BG60-..-SN**	16000		3600	1800
23	1200	20	60,9	"	16000		"	"
25	1200	22	55,76	"	16000		"	"
28	1200	24	50,31	"	16000		"	"
33	1200	28	43,05	"	16000		"	"
36	1200	31	38,85	"	16000		"	"
43	1200	37	32,48	"	15400		"	"
48	1200	41	29,31	"	14800		"	"
56	1200	48	24,82	"	13800		"	"
63	1200	54	22,4	"	13300		"	"
75	1140	61	18,62	"	12400		"	"
83	1100	65	16,8	"	12000		"	"
104	1020	76	13,47	"	11200		"	"
115	980	81	12,16	"	10800		"	"
138	910	90	10,12	"	10200		"	"
153	880	96	9,13	"	9800		"	"
203	780	113	6,88	"	8600		"	"
281	680	137	4,98	"	7800		"	"
374	610	163	3,74	"	7100		"	"
556	535	212	2,52	"	6200		"	"

M = 1490 .. 2300 Nm

50 Hz			i	Type	F_{RN}	F_{RV}	permissible input speed [1/min]	
n_2	M_2	M_1					for mounting position	
(4 pole)	f_B=1,0						H1,H2,H3,H4,H5,B5,V1	H6,V3,V6
1/min	Nm	Nm			N	N	B3,B6,B7,B8,V5	
23	2300	38	59,82	**BG70-..-SN**	20000		1800	1800
28	2300	46	50,4	"	20000		"	"
30	2300	49	46,54	"	20000		"	"
36	2300	59	39,22	"	19100		"	"
40	2300	65	35,24	"	18300		"	"
47	2300	77	29,69	"	16900		"	"
51	2300	85	27,21	"	16400		"	"
61	2300	100	22,92	"	15100		"	"
67	2300	110	20,98	"	14600		"	"
79	2300	130	17,68	"	13400		"	"
90	2300	148	15,53	"	12700		"	"
107	2300	176	13,08	"	11600		"	"
117	2300	192	11,97	"	11200		"	"
139	2300	228	10,09	"	10200		"	"
165	2250	265	8,48	"	9500		"	"
196	2150	301	7,14	"	8800		"	"
239	1750	298	5,87	"	8200		"	"
283	1490	301	4,95	"	6900		"	"

M = 2600 .. 4200 Nm

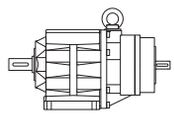

50 Hz			i	Type	F_{RN}	F_{RV}	permissible input speed [1/min]	
n_2	M_2	M_1					for mounting position	
(4 pole)	f_B=1,0						H1,H2,H3,H4,H5,B5,V1	H6,V3,V6
1/min	Nm	Nm			N	N	B3,B6,B7,B8,V5	
22	4200	66	63,56	**BG80-..-SN**	26000		1800	1800
24	4200	73	57,24	"	25400		"	"
29	4200	86	48,8	"	23800		"	"
32	4200	96	43,94	"	22600		"	"
37	4200	111	38	"	21300		"	"
41	4200	123	34,22	"	20200		"	"
48	4200	143	29,36	"	18900		"	"
53	4200	159	26,44	"	17900		"	"
63	4200	190	22,09	"	16500		"	"
70	4200	211	19,89	"	15500		"	"
81	4200	242	17,35	"	14600		"	"
90	4200	269	15,62	"	13700		"	"
110	4200	331	12,69	"	12400		"	"
122	4200	367	11,43	"	11600		"	"
152	3900	423	9,21	"	10800		"	"
169	3750	452	8,3	"	10400		"	"
212	2950	447	6,6	"	9100		"	"
236	2600	438	5,94	"	8300		"	"

M = 5700 .. 8400 Nm

50 Hz			i	Type	F_{RN}	F_{RV}	permissible input speed [1/min]	
n_2	M_2	M_1					for mounting position	
(4 pole)	f_B=1,0						H1,H2,H3,H4,H5,B5,V1	H6,V3,V6
1/min	Nm	Nm			N	N	B3,B6,B7,B8,V5	
26	8400	157	53,46	**BG90-..-SN**	65000		1800	1800
29	8400	172	48,82	"	65000		"	"
33	8400	201	41,85	"	65000		"	"
37	8400	220	38,21	"	65000		"	"
43	8400	258	32,62	"	65000		"	"
47	8400	282	29,78	"	65000		"	"
56	8400	339	24,78	"	65000		"	"
62	8400	371	22,62	"	65000		"	"
71	8400	427	19,67	"	62400		"	"
78	8200	457	17,96	"	59800		"	"
96	7700	526	14,64	"	57000		"	"
105	7500	561	13,37	"	55000		"	"
128	7000	642	10,9	"	52300		"	"
141	6800	683	9,95	"	50500		"	"
176	6300	790	7,97	"	47900		"	"
192	6100	838	7,28	"	46300		"	"
217	5800	898	6,46	"	44200		"	"
237	5700	966	5,9	"	43000		"	"

BG-series helical-geared motors

Selection helical-geared motors with SN input

M = 7200 .. 16800 Nm

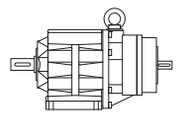

50 Hz			i	Type	F_{RN}	F_{RV}	permissible input speed [1/min] for mounting position	
n_2 (4 pole) 1/min	M_2 f_B=1,0 Nm	M_1 Nm			N	N	H1,H2,H3,H4,H5,B5,V1 B3,B6,B7,B8,V5	H6,V3,V6
5,4	16800	65	259	**BG100-..-SN**	90000		1800	1800
6	16800	72	232,6	"	90000		"	"
7	16800	85	198,8	"	90000		"	"
7,8	16800	94	178,6	"	90000		"	"
9	16800	109	154,8	"	90000		"	"
10	16800	121	139,1	"	90000		"	"
12	16800	140	119,7	"	90000		"	"
13	16800	156	107,5	"	90000		"	"
16	16800	187	90,02	"	90000		"	"
17	16500	204	80,85	"	90000		"	"
20	15700	222	70,69	"	90000		"	"
22	15400	243	63,49	"	90000		"	"
27	14400	279	51,7	"	90000		"	"
30	14000	302	46,43	"	90000		"	"
37	13100	349	37,54	"	90000		"	"
42	12800	380	33,71	"	88500		"	"
58	11200	468	23,95	"	87900		"	"
81	10100	581	17,39	"	82400		"	"
112	7200	578	12,45	"	72100		"	"

M = 56 .. 130 Nm

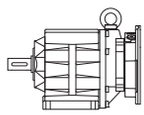

50 Hz		i	Type	F_{RN}	F_{RV}	max. permissible input torque M1 [Nm] *													
n_2	M_2					1	3	3	5	10	20	26	55	105	145	210	290	385	575
(4 pole)	f_B=1,0					IEC Motor Size *													
1/min	Nm			N	N	56	63	71	80	90	100	112	132	160	180	200	225	250	280
19	120	73,13	**BG10-..-C/IEC**	2000	2800	■	■	■											
21	120	66	"	2000	2800	■	■	■											
22	120	63,69	"	2000	2800	■	■	■	■	■	■								
24	120	57,48	"	2000	2800	■	■	■	■	■	■								
27	120	51,57	"	2000	2800	■	■	■	■	■	■								
30	120	46,55	"	1920	2650	■	■	■	■	■	■								
32	120	43,99	"	1880	2600	■	■	■	■	■	■								
35	120	39,7	"	1780	2450	■	■	■	■	■	■								
40	120	34,92	"	1690	2350	■	■	■	■	■	■								
44	120	31,52	"	1600	2200	■	■	■	■	■	■								
48	120	29,09	"	1540	2150	■	■	■	■	■	■								
53	120	26,26	"	1460	2000	■	■	■	■	■	■								
57	120	24,42	"	1410	1970	■	■	■	■	■	■								
64	120	22,04	"	1330	1860	■	■	■	■	■	■								
68	120	20,51	"	1290	1800	■	■	■	■	■	■								
76	120	18,51	"	1210	1690	■	■	■	■	■	■								
87	117	16,15	"	1140	1590	■	■	■	■	■	■								
96	114	14,58	"	1100	1540	■	■	■	■	■	■								
106	110	13,21	"	1070	1490	■	■	■	■	■	■								
117	105	11,92	"	1030	1440	■	■	■	■	■	■								
135	99	10,34	"	1000	1400				■	■	■								
150	97	9,33	"	950	1330				■	■	■								
173	88	8,07	"	660	920	■	■	■	■	■	■								
206	81	6,78	"	660	920	■	■	■	■	■	■								
262	75	5,34	"	620	910	■	■	■	■	■	■								
321	68	4,36	"	650	910	■	■	■	■	■	■								
409	62	3,42	"	630	880				■	■	■								
556	56	2,52	"	570	790				■	■	■								
4,6	120	305,8	**BG10Z-..-C/IEC**	2000	2800	■	■	■	■										
5,1	120	276	"	2000	2800	■	■	■	■										
5,3	120	266,3	"	2000	2800	■	■	■	■										
5,8	120	240,4	"	2000	2800	■	■	■	■										
6,5	120	215,7	"	2000	2800	■	■	■	■										
7,2	120	194,6	"	2000	2800	■	■	■	■										
7,6	120	184	"	2000	2800	■	■	■	■										
8,4	120	166	"	2000	2800	■	■	■	■										
10	120	146	"	2000	2800	■	■	■	■										
11	120	131,8	"	2000	2800	■	■	■	■										
12	120	121,7	"	2000	2800	■	■	■	■										
13	120	109,8	"	2000	2800	■	■	■	■										
14	120	102,1	"	2000	2800	■	■	■	■										
15	120	92,19	"	2000	2800	■	■	■	■										
16	120	85,76	"	2000	2800	■	■	■	■										
18	120	77,4	"	2000	2800	■	■	■	■										
21	103	67,54	"	2000	2800	■	■	■	■										
0,29	130	4884	**BG10G06-..-C/IEC**	2000	2800	■	■	■											
0,31	130	4477	"	2000	2800	■	■	■											
0,38	130	3684	"	2000	2800	■	■	■	■										
0,41	130	3378	"	2000	2800	■	■	■	■										
0,48	130	2944	"	2000	2800	■	■	■	■										
0,5	130	2699	"	2000	2800	■	■	■	■										
0,6	130	2356	"	2000	2800	■	■	■	■										
0,8	130	1863	"	2000	2800	■	■	■	■										
0,9	130	1523	"	2000	2800	■	■	■	■										
1,1	130	1272	"	2000	2800	■	■	■	■										
1,3	130	1081	"	2000	2800	■	■	■	■										
1,6	130	899,5	"	2000	2800	■	■	■	■										
1,9	130	748,9	"	2000	2800	■	■	■	■										
2,3	130	613,6	"	2000	2800	■	■	■	■										
2,7	130	512,6	"	2000	2800	■	■	■	■										
3,2	130	435,9	"	2000	2800	■	■	■	■										
3,7	130	379,6	"	2000	2800	■	■	■	■										

* acc. to DIN/EN 50347:2001
For speeds above 1500 1/min, refer to manufacturer

BG-series helical-geared motors

Selection helical-geared geared box with C-coupling

M = 56 .. 130 Nm

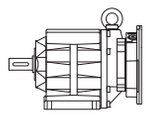

50 Hz		i	Type	F_{RN}	F_{RV}	max. permissible input torque M1 [Nm] *													
n_2	M_2					1	3	3	5	10	20	26	55	105	145	210	290	385	575
(4 pole)	f_B=1,0					IEC Motor Size *													
1/min	Nm			N	N	56	63	71	80	90	100	112	132	160	180	200	225	250	280
4,2	130	332	**BG10G06-..-C/IEC**	2000	2800	■	■	■	■										
5,1	130	276,4	"	2000	2800	■	■	■	■										
5,8	130	240,7	"	2000	2800	■	■	■	■										
7,2	130	194,9	"	2000	2800	■	■	■	■										
8,4	130	166,3	"	2000	2800	■	■	■	■										
9,3	130	150,1	"	2000	2800	■	■	■	■										

M = 84 .. 200 Nm

50 Hz		i	Type	F_{RN}	F_{RV}	max. permissible input torque M1 [Nm] *													
n_2	M_2					1	3	3	5	10	20	26	55	105	145	210	290	385	575
(4 pole)	f_B=1,0					IEC Motor Size *													
1/min	Nm			N	N	56	63	71	80	90	100	112	132	160	180	200	225	250	280
21	200	65,62	**BG20-..-C/IEC**	5000		■	■	■	■	■	■								
24	200	59,07	"	5000		■	■	■	■	■	■								
26	200	53,22	"	4950		■	■	■	■	■	■								
29	200	47,92	"	4750		■	■	■	■	■	■								
30	200	46,38	"	4700		■	■	■	■	■	■								
34	200	41,76	"	4500		■	■	■	■	■	■								
38	200	37,02	"	4300		■	■	■	■	■	■								
42	200	33,33	"	4100		■	■	■	■	■	■								
45	200	30,94	"	4000		■	■	■	■	■	■								
50	200	27,85	"	3800		■	■	■	■	■	■								
54	200	25,79	"	3700		■	■	■	■	■	■								
60	200	23,22	"	3550		■	■	■	■	■	■								
63	200	22,16	"	3500		■	■	■	■	■	■								
70	195	19,95	"	3350		■	■	■	■	■	■								
81	183	17,31	"	3200		■	■	■	■	■	■								
90	177	15,58	"	3100		■	■	■	■	■	■								
95	172	14,67	"	3050		■	■	■	■	■	■								
106	167	13,21	"	2900		■	■	■	■	■	■								
120	158	11,71	"	2800					■	■	■								
133	154	10,54	"	2700					■	■	■								
145	122	9,65	"	2250		■	■	■	■	■	■								
157	143	8,91	"	2600					■	■	■								
169	122	8,29	"	2250		■	■	■	■	■	■								
175	137	8,02	"	2500					■	■	■								
216	122	6,48	"	2250		■	■	■	■	■	■								
255	115	5,49	"	2100		■	■	■	■	■	■								
320	104	4,38	"	1990					■	■	■								
420	92	3,33	"	1830					■	■	■								
556	84	2,52	"	1650					■	■	■								
6,3	200	222,1	**BG20Z-..-C/IEC**	5000		■	■	■	■										
7	200	199,9	"	5000		■	■	■	■										
7,8	200	180,1	"	5000		■	■	■	■										
8,6	200	162,2	"	5000		■	■	■	■										
8,9	200	157	"	5000		■	■	■	■										
10	200	141,3	"	5000		■	■	■	■										
11	200	125,3	"	5000		■	■	■	■										
12	200	112,8	"	5000		■	■	■	■										
13	200	104,7	"	5000		■	■	■	■										
15	200	94,27	"	5000		■	■	■	■										
16	200	87,3	"	5000		■	■	■	■										
18	200	78,6	"	5000		■	■	■	■										
19	200	75	"	5000		■	■	■	■										
21	200	67,53	"	5000		■	■	■	■										
24	172	58,58	"	5000		■	■	■	■										

* acc. to DIN/EN 50347:2001
For speeds above 1500 1/min, refer to manufacturer

M = 84 .. 220 Nm

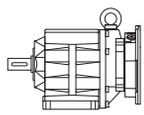

50 Hz		i	Type	F_{RN}	F_{RV}	max. permissible input torque M1 [Nm] *													
n_2	M_2					1	3	3	5	10	20	26	55	105	145	210	290	385	575
(4 pole)	f_B=1,0					IEC Motor Size *													
1/min	Nm			N	N	56	63	71	80	90	100	112	132	160	180	200	225	250	280
0,32	220	4383	**BG20G06-..-C/IEC**	5000		■	■	■											
0,35	220	4017	"	5000		■	■	■											
0,42	220	3306	"	5000		■	■	■	■										
0,46	220	3031	"	5000		■	■	■	■										
0,5	220	2642	"	5000		■	■	■	■										
0,6	220	2422	"	5000		■	■	■	■										
0,7	220	2114	"	5000		■	■	■	■										
0,8	220	1824	"	5000		■	■	■	■										
0,8	220	1672	"	5000		■	■	■	■										
1	220	1366	"	5000		■	■	■	■										
1,2	220	1142	"	5000		■	■	■	■										
1,4	220	969,9	"	5000		■	■	■	■										
1,7	220	807,1	"	5000		■	■	■	■										
2,1	220	671,9	"	5000		■	■	■	■										
2,5	220	550,6	"	5000		■	■	■	■										
3	220	460	"	5000		■	■	■	■										
3,6	220	391,1	"	5000		■	■	■	■										
4	220	352,1	"	5000		■	■	■	■										
4,7	220	297,9	"	5000		■	■	■	■										
5,6	220	248	"	5000		■	■	■	■										

M = 128 .. 325 Nm

50 Hz		i	Type	F_{RN}	F_{RV}	max. permissible input torque M1 [Nm] *													
n_2	M_2					1	3	3	5	10	20	26	55	105	145	210	290	385	575
(4 pole)	f_B=1,0					IEC Motor Size *													
1/min	Nm			N	N	56	63	71	80	90	100	112	132	160	180	200	225	250	280
21	300	67,44	**BG30-..-C/IEC**	6000		■	■	■	■	■	■								
23	300	60,79	"	6000		■	■	■	■	■	■								
24	300	58,18	"	6000		■	■	■	■	■	■								
27	300	52,44	"	6000		■	■	■	■	■	■								
30	300	47,11	"	6000		■	■	■	■	■	■								
33	300	42,46	"	5900		■	■	■	■	■	■								
36	300	39,02	"	5800		■	■	■	■	■	■								
40	300	35,17	"	5500		■	■	■	■	■	■								
42	300	33,09	"	5400		■	■	■	■	■	■								
47	300	29,83	"	5200		■	■	■	■	■	■								
50	300	28,24	"	5100		■	■	■	■	■	■								
55	300	25,45	"	4850		■	■	■	■	■	■								
63	300	22,18	"	4600		■	■	■	■	■	■	■							
70	300	19,99	"	4200		■	■	■	■	■	■	■							
74	300	18,93	"	4100		■	■	■	■	■	■	■							
82	300	17,06	"	3700		■	■	■	■	■	■	■							
92	300	15,27	"	3450					■	■	■	■							
102	290	13,77	"	3150					■	■	■	■							
118	270	11,82	"	3200					■	■	■	■							
131	265	10,65	"	2950					■	■	■	■							
147	250	9,55	"	3000					■	■	■	■							
163	245	8,6	"	2800					■	■	■	■							
177	215	7,91	"	1760		■	■	■	■	■	■	■							
207	215	6,75	"	1760		■	■	■	■	■	■	■							
257	200	5,44	"	1670					■	■	■	■							
333	171	4,21	"	1630					■	■	■	■							
412	139	3,4	"	1580					■	■	■	■							
524	128	2,67	"	1450					■	■	■	■							
4,8	300	290,5	**BG30Z-..-C/IEC**	6000		■	■	■	■	■	■								
5,3	300	261,9	"	6000		■	■	■	■	■	■								
5,6	300	250,6	"	6000		■	■	■	■	■	■								
6,2	300	225,9	"	6000		■	■	■	■	■	■								
6,9	300	202,9	"	6000		■	■	■	■	■	■								
7,7	300	182,9	"	6000		■	■	■	■	■	■								
8,3	300	168,1	"	6000		■	■	■	■	■	■								
9,2	300	151,5	"	6000		■	■	■	■	■	■								
10	300	142,5	"	6000		■	■	■	■	■	■								

* acc. to DIN/EN 50347:2001
For speeds above 1500 1/min, refer to manufacturer

BG-series helical-geared motors

Selection helical-geared geared box with C-coupling

M = 128 .. 325 Nm

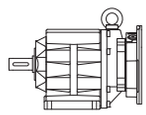

50 Hz		i	Type	F_{RN}	F_{RV}	max. permissible input torque M1 [Nm] *													
n_2	M_2					1	3	3	5	10	20	26	55	105	145	210	290	385	575
(4 pole)	f_B=1,0					IEC Motor Size *													
1/min	Nm			N	N	56	63	71	80	90	100	112	132	160	180	200	225	250	280
11	300	128,5	**BG30Z-..-C/IEC**	6000		■	■	■	■	■	■								
12	300	121,6	"	6000		■	■	■	■	■	■								
13	300	109,6	"	6000		■	■	■	■	■	■								
15	300	95,55	"	6000		■	■	■	■	■	■								
16	300	86,13	"	6000		■	■	■	■	■	■								
17	300	81,55	"	6000		■	■	■	■	■	■								
19	300	73,51	"	6000		■	■	■	■	■	■								
21	265	65,79	"	6000		■	■	■	■	■	■								
0,31	325	4504	**BG30G06-..-C/IEC**	6000		■	■	■											
0,36	325	3867	"	6000		■	■	■											
0,41	325	3398	"	6000		■	■	■	■										
0,45	325	3115	"	6000		■	■	■	■										
0,5	325	2715	"	6000		■	■	■	■										
0,6	325	2173	"	6000		■	■	■	■										
0,7	325	1875	"	6000		■	■	■	■										
0,8	325	1718	"	6000		■	■	■	■										
1	325	1404	"	6000		■	■	■	■										
1,1	325	1280	"	6000		■	■	■	■										
1,3	325	1088	"	6000		■	■	■	■										
1,4	325	996,8	"	6000		■	■	■	■										
1,7	325	829,5	"	6000		■	■	■	■										
1,8	325	760,7	"	6000		■	■	■	■										
2	325	690,6	"	6000		■	■	■	■										
2,5	325	565,8	"	6000		■	■	■	■										
3	325	472,8	"	6000		■	■	■	■										
3,5	325	401,9	"	6000		■	■	■	■										
4	325	346,8	"	6000		■	■	■	■										
4,6	325	306,2	"	6000		■	■	■	■										
5,5	325	254,9	"	6000		■	■	■	■										

M = 202 .. 465 Nm

50 Hz		i	Type	F_{RN}	F_{RV}	max. permissible input torque M1 [Nm] *													
n_2	M_2					1	3	3	5	10	20	26	55	105	145	210	290	385	575
(4 pole)	f_B=1,0					IEC Motor Size *													
1/min	Nm			N	N	56	63	71	80	90	100	112	132	160	180	200	225	250	280
21	425	66,2	**BG40-..-C/IEC**	7000					■	■	■								
23	425	59,64	"	7000					■	■	■								
26	425	53,69	"	7000					■	■	■								
29	425	48,36	"	7000					■	■	■								
31	425	44,62	"	7000					■	■	■								
35	425	40,19	"	7000					■	■	■								
37	425	37,96	"	7000					■	■	■								
41	425	34,2	"	7000					■	■	■								
43	425	32,57	"	7000					■	■	■								
48	425	29,34	"	6800					■	■	■								
54	425	26,01	"	6500					■	■	■	■							
60	425	23,43	"	6200					■	■	■	■							
64	425	22,02	"	6000					■	■	■	■							
71	425	19,84	"	5800					■	■	■	■							
77	425	18,19	"	5600					■	■	■	■							
85	425	16,39	"	5300					■	■	■	■							
98	420	14,28	"	4900					■	■	■	■							
109	410	12,86	"	4500					■	■	■	■							
122	385	11,49	"	4600					■	■	■	■							
135	375	10,35	"	4350					■	■	■	■							
152	355	9,23	"	4350					■	■	■	■							
156	295	9	"	2650					■	■	■	■							
168	340	8,31	"	4100					■	■	■	■							
184	295	7,62	"	2650					■	■	■	■							
223	295	6,29	"	2600					■	■	■	■							
283	265	4,94	"	2450					■	■	■	■							

* acc. to DIN/EN 50347:2001
For speeds above 1500 1/min, refer to manufacturer

M = 202 .. 465 Nm

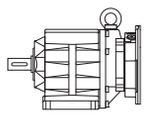

50 Hz		i	Type	F_{RN}	F_{RV}	max. permissible input torque M1 [Nm] *													
n_2	M_2					1	3	3	5	10	20	26	55	105	145	210	290	385	575
(4 pole)	f_B=1,0					IEC Motor Size *													
1/min	Nm			N	N	56	63	71	80	90	100	112	132	160	180	200	225	250	280
353	240	3,97	**BG40-..-C/IEC**	2400					■	■	■	■							
439	220	3,19	"	2350					■	■	■	■							
569	202	2,46	"	2150					■	■	■	■							
5,1	425	273,6	**BG40Z-..-C/IEC**	7000		■	■	■	■	■	■								
5,7	425	246,5	"	7000		■	■	■	■	■	■								
6,3	425	221,9	"	7000		■	■	■	■	■	■								
7	425	199,9	"	7000		■	■	■	■	■	■								
7,6	425	184,4	"	7000		■	■	■	■	■	■								
8,4	425	166,1	"	7000		■	■	■	■	■	■								
8,9	425	156,9	"	7000		■	■	■	■	■	■								
10	425	141,4	"	7000		■	■	■	■	■	■								
10	425	134,6	"	7000		■	■	■	■	■	■								
12	425	121,3	"	7000		■	■	■	■	■	■								
13	425	107,5	"	7000		■	■	■	■	■	■								
14	425	96,86	"	7000		■	■	■	■	■	■								
15	425	91,02	"	7000		■	■	■	■	■	■								
17	425	82	"	7000		■	■	■	■	■	■								
19	425	75,19	"	7000		■	■	■	■	■	■								
21	425	67,74	"	7000		■	■	■	■	■	■								
0,29	465	4841	**BG40G10-..-C/IEC**	7000		■	■	■											
0,33	465	4216	"	7000		■	■	■	■	■	■								
0,37	465	3805	"	7000		■	■	■	■	■	■								
0,45	465	3082	"	7000		■	■	■	■	■	■								
0,5	465	2628	"	7000		■	■	■	■	■	■								
0,7	465	2087	"	7000		■	■	■	■	■	■								
0,8	465	1738	"	7000		■	■	■	■	■	■								
1	465	1459	"	7000		■	■	■	■	■	■								
1,1	465	1225	"	7000		■	■	■	■	■	■								
1,5	465	965,2	"	7000		■	■	■	■	■	■								
1,8	465	789,1	"	7000		■	■	■	■	■	■								
2	465	710,9	"	7000		■	■	■	■	■	■								
2,2	465	640	"	7000		■	■	■	■	■	■								
2,6	465	534,2	"	7000		■	■	■	■	■	■								
3,1	465	448,8	"	7000		■	■	■	■	■	■								
4	465	353,5	"	7000		■	■	■	■	■	■								
4,9	465	288,6	"	7000		■	■	■	■	■	■								

M = 645 .. 690 Nm

50 Hz		i	Type	F_{RN}	F_{RV}	max. permissible input torque M1 [Nm] *													
n_2	M_2					1	3	3	5	10	20	26	55	105	145	210	290	385	575
(4 pole)	f_B=1,0					IEC Motor Size *													
1/min	Nm			N	N	56	63	71	80	90	100	112	132	160	180	200	225	250	280
21	630	65,86	**BG50-..-C/IEC**	10000					■	■	■								
24	630	59,42	"	10000					■	■	■								
27	630	52,12	"	10000					■	■	■	■	■	■					
30	630	47,02	"	10000					■	■	■	■	■	■					
33	630	42	"	10000					■	■	■	■	■	■					
37	630	37,89	"	10000					■	■	■	■	■	■					
43	630	32,84	"	8700					■	■	■	■	■	■					
47	630	29,62	"	8000					■	■	■	■	■	■					
58	630	24,34	"	8700					■	■	■	■	■	■					
64	630	21,96	"	8000					■	■	■	■	■	■					
76	630	18,33	"	7200					■	■	■	■	■	■					
85	630	16,53	"	6500					■	■	■	■	■	■					
105	590	13,36	"	6100					■	■	■	■	■	■					
116	570	12,06	"	5700					■	■	■	■	■	■					
145	520	9,65	"	5600								■	■	■					
161	500	8,7	"	5300								■	■	■					
208	450	6,74	"	3750					■	■	■	■	■	■					
285	395	4,91	"	3500					■	■	■	■	■	■					
394	345	3,55	"	3300								■	■	■					
567	306	2,47	"	2900								■	■	■					

* acc. to DIN/EN 50347:2001
For speeds above 1500 1/min, refer to manufacturer

BG-series helical-geared motors

Selection helical-geared geared box with C-coupling

M = 645 .. 690 Nm

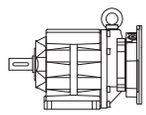

50 Hz		i	Type	F_{RN}	F_{RV}	max. permissible input torque M1 [Nm] *													
n_2	M_2					1	3	3	5	10	20	26	55	105	145	210	290	385	575
(4 pole)	f_B=1,0					IEC Motor Size *													
1/min	Nm			N	N	56	63	71	80	90	100	112	132	160	180	200	225	250	280
4,9	630	286,7	**BG50Z-..-C/IEC**	10000		■	■	■	■	■	■								
5,4	630	258,6	"	10000		■	■	■	■	■	■								
6,2	630	226,9	"	10000		■	■	■	■	■	■								
6,8	630	204,7	"	10000		■	■	■	■	■	■								
7,7	630	182,8	"	10000		■	■	■	■	■	■								
8,5	630	164,9	"	10000		■	■	■	■	■	■								
10	630	142,9	"	10000		■	■	■	■	■	■								
11	630	128,9	"	10000		■	■	■	■	■	■								
13	630	106	"	10000		■	■	■	■	■	■								
15	630	95,58	"	10000		■	■	■	■	■	■								
18	630	79,78	"	10000		■	■	■	■	■	■								
19	630	71,97	"	10000		■	■	■	■	■	■								
0,29	690	4816	**BG50G10-..-C/IEC**	10000		■	■	■											
0,33	690	4195	"	10000		■	■	■	■	■	■								
0,37	690	3786	"	10000		■	■	■	■	■	■								
0,46	690	3066	"	10000		■	■	■	■	■	■								
0,5	690	2615	"	10000		■	■	■	■	■	■								
0,7	690	2076	"	10000		■	■	■	■	■	■								
0,8	690	1729	"	10000		■	■	■	■	■	■								
1	690	1452	"	10000		■	■	■	■	■	■								
1,1	690	1219	"	10000		■	■	■	■	■	■								
1,5	690	960,2	"	10000		■	■	■	■	■	■								
1,8	690	785,1	"	10000		■	■	■	■	■	■								
2	690	708,3	"	10000		■	■	■	■	■	■								
2,3	690	621,3	"	10000		■	■	■	■	■	■								
2,6	690	531,5	"	10000		■	■	■	■	■	■								
3,1	690	446,5	"	10000		■	■	■	■	■	■								
4	690	351,7	"	10000		■	■	■	■	■	■								
4,9	690	287,1	"	10000		■	■	■	■	■	■								

M = 535 .. 1300 Nm

50 Hz		i	Type	F_{RN}	F_{RV}	max. permissible input torque M1 [Nm] *													
n_2	M_2					1	3	3	5	10	20	26	55	105	145	210	290	385	575
(4 pole)	f_B=1,0					IEC Motor Size *													
1/min	Nm			N	N	56	63	71	80	90	100	112	132	160	180	200	225	250	280
21	1200	67,49	**BG60-..-C/IEC**	16000						■	■	■	■	■					
23	1200	60,9	"	16000						■	■	■	■	■					
25	1200	55,76	"	16000						■	■	■	■	■					
28	1200	50,31	"	16000						■	■	■	■	■					
33	1200	43,05	"	16000						■	■	■	■	■					
36	1200	38,85	"	16000						■	■	■	■	■					
43	1200	32,48	"	15400						■	■	■	■	■					
48	1200	29,31	"	14800						■	■	■	■	■					
56	1200	24,82	"	13800						■	■	■	■	■					
63	1200	22,4	"	13300						■	■	■	■	■					
75	1140	18,62	"	12400						■	■	■	■	■					
83	1100	16,8	"	12000						■	■	■	■	■					
104	1020	13,47	"	11200								■	■	■					
115	980	12,16	"	10800								■	■	■					
138	910	10,12	"	10200								■	■	■					
153	880	9,13	"	9800								■	■	■					
203	780	6,88	"	8600						■	■	■	■	■					
281	680	4,98	"	7800								■	■	■					
374	610	3,74	"	7100								■	■	■					
556	535	2,52	"	6200								■	■	■					
5,1	1200	274,5	**BG60Z-..-C/IEC**	16000					■	■	■	■							
5,7	1200	247,7	"	16000					■	■	■	■							
6,2	1200	226,7	"	16000					■	■	■	■							
6,8	1200	204,6	"	16000					■	■	■	■							
8	1200	175,1	"	16000					■	■	■	■							
8,9	1200	158	"	16000					■	■	■	■							

* acc. to DIN/EN 50347:2001
For speeds above 1500 1/min, refer to manufacturer

M = 535 .. 1300 Nm

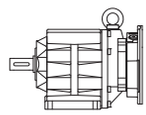

50 Hz		i	Type	F_{RN}	F_{RV}	max. permissible input torque M1 [Nm] *													
n_2	M_2					1	3	3	5	10	20	26	55	105	145	210	290	385	575
(4 pole)	f_B=1,0					IEC Motor Size *													
1/min	Nm			N	N	56	63	71	80	90	100	112	132	160	180	200	225	250	280
11	1200	132,1	**BG60Z-..-C/IEC**	16000					■	■	■	■							
12	1200	119,2	"	16000					■	■	■	■							
14	1200	101	"	16000					■	■	■	■							
15	1200	91,09	"	16000					■	■	■	■							
18	1200	75,71	"	16000					■	■	■	■							
20	1200	68,32	"	16000					■	■	■	■							
0,32	1300	4429	**BG60G20-..-C/IEC**	16000		■	■	■	■	■	■								
0,39	1300	3592	"	16000		■	■	■	■	■	■								
0,43	1300	3234	"	16000		■	■	■	■	■	■								
0,5	1300	2818	"	16000		■	■	■	■	■	■								
0,6	1300	2249	"	16000		■	■	■	■	■	■								
0,7	1300	1880	"	16000		■	■	■	■	■	■								
0,8	1300	1741	"	16000		■	■	■	■	■	■								
0,9	1300	1496	"	16000		■	■	■	■	■	■								
1	1300	1346	"	16000		■	■	■	■	■	■								
1,2	1300	1168	"	16000		■	■	■	■	■	■								
1,3	1300	1051	"	16000		■	■	■	■	■	■								
1,6	1300	891,5	"	16000		■	■	■	■	■	■								
1,7	1300	804,5	"	16000		■	■	■	■	■	■								
2,1	1300	651,3	"	16000		■	■	■	■	■	■								
2,5	1300	559,5	"	16000		■	■	■	■	■	■								
2,8	1300	504,9	"	16000		■	■	■	■	■	■								
3,2	1300	437,3	"	16000		■	■	■	■	■	■								
3,8	1300	370,5	"	16000		■	■	■	■	■	■								
4,2	1300	334,3	"	16000		■	■	■	■	■	■								
4,6	1300	306,1	"	16000		■	■	■	■	■	■								
5,1	1300	276,2	"	16000		■	■	■	■	■	■								

M = 1490 .. 2500 Nm

50 Hz		i	Type	F_{RN}	F_{RV}	max. permissible input torque M1 [Nm] *													
n_2	M_2					1	3	3	5	10	20	26	55	105	145	210	290	385	575
(4 pole)	f_B=1,0					IEC Motor Size *													
1/min	Nm			N	N	56	63	71	80	90	100	112	132	160	180	200	225	250	280
23	2300	59,82	**BG70-..-C/IEC**	20000						■	■	■	■	■					
28	2300	50,4	"	20000						■	■	■	■	■					
30	2300	46,54	"	20000						■	■	■	■	■					
36	2300	39,22	"	19100						■	■	■	■	■					
40	2300	35,24	"	18300						■	■	■	■	■	■	■	■	■	■
47	2300	29,69	"	16900						■	■	■	■	■	■	■	■	■	■
51	2300	27,21	"	16400						■	■	■	■	■	■	■	■	■	■
61	2300	22,92	"	15100						■	■	■	■	■	■	■	■	■	■
67	2300	20,98	"	14600						■	■	■	■	■	■	■	■	■	■
79	2300	17,68	"	13400						■	■	■	■	■	■	■	■	■	■
90	2300	15,53	"	12700								■	■	■	■	■	■	■	■
107	2300	13,08	"	11600								■	■	■	■	■	■	■	■
117	2300	11,97	"	11200								■	■	■	■	■	■	■	■
139	2300	10,09	"	10200								■	■	■	■	■	■	■	■
165	2250	8,48	"	9500								■	■	■	■	■	■	■	■
196	2150	7,14	"	8800								■	■	■	■	■	■	■	■
239	1750	5,87	"	8200											■	■	■	■	■
283	1490	4,95	"	6900											■	■	■	■	■
5,6	2300	249,8	**BG70Z-..-C/IEC**	20000					■	■	■	■	■						
6,7	2300	210,5	"	20000					■	■	■	■	■						
7,2	2300	194,4	"	20000					■	■	■	■	■						
8,5	2300	163,8	"	20000					■	■	■	■	■						
10	2300	147,2	"	20000					■	■	■	■	■						
11	2300	124	"	20000					■	■	■	■	■						
12	2300	113,6	"	20000					■	■	■	■	■						
15	2300	95,74	"	20000					■	■	■	■	■						
16	2300	87,61	"	20000					■	■	■	■	■						
19	2300	73,82	"	20000					■	■	■	■	■						
22	2300	64,85	"	20000					■	■	■	■	■						
26	1930	54,64	"	20000					■	■	■	■	■						

* acc. to DIN/EN 50347:2001
For speeds above 1500 1/min, refer to manufacturer

BG-series helical-geared motors

Selection helical-geared geared box with C-coupling

M = 1490 .. 2500 Nm

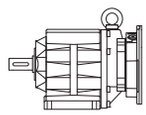

50 Hz		i	Type	F_{RN}	F_{RV}	max. permissible input torque M1 [Nm] *													
n_2	M_2					1	3	3	5	10	20	26	55	105	145	210	290	385	575
(4 pole)	f_B=1,0					IEC Motor Size *													
1/min	Nm			N	N	56	63	71	80	90	100	112	132	160	180	200	225	250	280
0,36	2500	3925	**BG70G20-..-C/IEC**	20000		■	■	■	■	■	■								
0,44	2500	3184	"	20000		■	■	■	■	■	■								
0,5	2500	2774	"	20000		■	■	■	■	■	■								
0,6	2500	2215	"	20000		■	■	■	■	■	■								
0,7	2500	1994	"	20000		■	■	■	■	■	■								
0,8	2500	1666	"	20000		■	■	■	■	■	■								
0,9	2500	1543	"	20000		■	■	■	■	■	■								
1	2500	1389	"	20000		■	■	■	■	■	■								
1,2	2500	1193	"	20000		■	■	■	■	■	■								
1,4	2500	1035	"	20000		■	■	■	■	■	■								
1,6	2500	877,6	"	20000		■	■	■	■	■	■								
1,8	2500	790,2	"	20000		■	■	■	■	■	■								
2,1	2500	665,8	"	20000		■	■	■	■	■	■								
2,4	2500	577,3	"	20000		■	■	■	■	■	■								
2,8	2500	495,9	"	20000		■	■	■	■	■	■								
3,4	2500	417,8	"	20000		■	■	■	■	■	■								
3,6	2500	387,6	"	20000		■	■	■	■	■	■								
4,3	2500	328,4	"	20000		■	■	■	■	■	■								
5,1	2500	276,7	"	20000		■	■	■	■	■	■								
5,5	2500	255,5	"	20000		■	■	■	■	■	■								

M = 2600 .. 4600 Nm

50 Hz		i	Type	F_{RN}	F_{RV}	max. permissible input torque M1 [Nm] *													
n_2	M_2					1	3	3	5	10	20	26	55	105	145	210	290	385	575
(4 pole)	f_B=1,0					IEC Motor Size *													
1/min	Nm			N	N	56	63	71	80	90	100	112	132	160	180	200	225	250	280
22	4200	63,56	**BG80-..-C/IEC**	26000								■	■	■					
24	4200	57,24	"	25400								■	■	■					
29	4200	48,8	"	23800								■	■	■	■	■	■	■	■
32	4200	43,94	"	22600								■	■	■	■	■	■	■	■
37	4200	38	"	21300								■	■	■	■	■	■	■	■
41	4200	34,22	"	20200								■	■	■	■	■	■	■	■
48	4200	29,36	"	18900								■	■	■	■	■	■	■	■
53	4200	26,44	"	17900								■	■	■	■	■	■	■	■
63	4200	22,09	"	16500								■	■	■	■	■	■	■	■
70	4200	19,89	"	15500								■	■	■	■	■	■	■	■
81	4200	17,35	"	14600								■	■	■	■	■	■	■	■
90	4200	15,62	"	13700								■	■	■	■	■	■	■	■
110	4200	12,69	"	12400								■	■	■	■	■	■	■	■
122	4200	11,43	"	11600								■	■	■	■	■	■	■	■
152	3900	9,21	"	10800											■	■	■	■	■
169	3750	8,3	"	10400											■	■	■	■	■
212	2950	6,6	"	9100											■	■	■	■	■
236	2600	5,94	"	8300											■	■	■	■	■
6,8	4200	207,4	**BG80Z-..-C/IEC**	26000						■	■	■	■	■					
7,5	4200	186,8	"	26000						■	■	■	■	■					
8,7	4200	161,5	"	26000						■	■	■	■	■					
10	4200	145,4	"	26000						■	■	■	■	■					
11	4200	124,8	"	26000						■	■	■	■	■					
12	4200	112,4	"	26000						■	■	■	■	■					
15	4200	93,89	"	26000						■	■	■	■	■					
17	4200	84,55	"	26000						■	■	■	■	■					
19	4200	73,73	"	26000						■	■	■	■	■					
21	4200	66,4	"	26000						■	■	■	■	■					
0,33	4600	4208	**BG80G40-..-C/IEC**	26000					■	■	■								
0,37	4600	3791	"	26000					■	■	■								
0,41	4600	3413	"	26000					■	■	■								
0,49	4600	2836	"	26000					■	■	■								
0,6	4600	2413	"	26000					■	■	■								
0,7	4600	2070	"	26000					■	■	■								

* acc. to DIN/EN 50347:2001
For speeds above 1500 1/min, refer to manufacturer

M = 2600 .. 4600 Nm

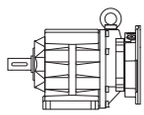

50 Hz		i	Type	F_{RN}	F_{RV}	max. permissible input torque M1 [Nm] *													
n_2	M_2					1	3	3	5	10	20	26	55	105	145	210	290	385	575
(4 pole)	f_B=1,0					IEC Motor Size *													
1/min	Nm			N	N	56	63	71	80	90	100	112	132	160	180	200	225	250	280
0,8	4600	1653	**BG80G40-..-C/IEC**	26000					■	■	■	■							
1	4600	1400	"	26000					■	■	■	■							
1,1	4600	1261	"	26000					■	■	■	■							
1,3	4600	1042	"	26000					■	■	■	■							
1,5	4600	907,6	"	26000					■	■	■	■							
1,7	4600	817,4	"	26000					■	■	■	■							
1,9	4600	730,3	"	26000					■	■	■	■							
2,1	4600	657,8	"	26000					■	■	■	■							
2,4	4600	572	"	26000					■	■	■	■							
2,9	4600	484,3	"	26000					■	■	■	■							
3,2	4600	436,2	"	26000					■	■	■	■							
3,5	4600	399,8	"	26000					■	■	■	■							
3,9	4600	360	"	26000					■	■	■	■							
4,5	4600	314	"	26000					■	■	■	■							
5	4600	282,8	"	26000					■	■	■	■							
5,5	4600	252,3	"	26000					■	■	■	■							
6,2	4600	227,2	"	26000					■	■	■	■							

M = 5700 .. 9200 Nm

50 Hz		i	Type	F_{RN}	F_{RV}	max. permissible input torque M1 [Nm] *													
n_2	M_2					1	3	3	5	10	20	26	55	105	145	210	290	385	575
(4 pole)	f_B=1,0					IEC Motor Size *													
1/min	Nm			N	N	56	63	71	80	90	100	112	132	160	180	200	225	250	280
26	8400	53,46	**BG90-..-C/IEC**	65000									■	■	■	■	■	■	■
29	8400	48,82	"	65000									■	■	■	■	■	■	■
33	8400	41,85	"	65000									■	■	■	■	■	■	■
37	8400	38,21	"	65000									■	■	■	■	■	■	■
43	8400	32,62	"	65000									■	■	■	■	■	■	■
47	8400	29,78	"	65000									■	■	■	■	■	■	■
56	8400	24,78	"	65000									■	■	■	■	■	■	■
62	8400	22,62	"	65000									■	■	■	■	■	■	■
71	8400	19,67	"	62400									■	■	■	■	■	■	■
78	8200	17,96	"	59800									■	■	■	■	■	■	■
96	7700	14,64	"	57000									■	■	■	■	■	■	■
105	7500	13,37	"	55000									■	■	■	■	■	■	■
128	7000	10,9	"	52300											■	■	■	■	■
141	6800	9,95	"	50500											■	■	■	■	■
176	6300	7,97	"	47900											■	■	■	■	■
192	6100	7,28	"	46300											■	■	■	■	■
217	5800	6,46	"	44200											■	■	■	■	■
237	5700	5,9	"	43000											■	■	■	■	■
6,1	8400	228,1	**BG90Z-..-C/IEC**	65000						■	■	■	■	■	■	■	■	■	■
6,7	8400	208,3	"	65000						■	■	■	■	■	■	■	■	■	■
7,8	8400	178,5	"	65000						■	■	■	■	■	■	■	■	■	■
8,6	8400	163	"	65000						■	■	■	■	■	■	■	■	■	■
10	8400	139,2	"	65000						■	■	■	■	■	■	■	■	■	■
11	8400	127,1	"	65000						■	■	■	■	■	■	■	■	■	■
13	8400	105,7	"	65000						■	■	■	■	■	■	■	■	■	■
15	8400	96,53	"	65000						■	■	■	■	■	■	■	■	■	■
17	8400	83,91	"	65000						■	■	■	■	■	■	■	■	■	■
18	8400	76,61	"	65000						■	■	■	■	■	■	■	■	■	■
22	7500	62,47	"	65000						■	■	■	■	■	■	■	■	■	■
25	6800	57,04	"	65000						■	■	■	■	■	■	■	■	■	■
0,4	9200	3521	**BG90G50-..-C/IEC**	65000					■	■	■								
0,44	9200	3177	"	65000					■	■	■								
0,5	9200	2786	"	65000					■	■	■	■	■	■					
0,6	9200	2514	"	65000					■	■	■	■	■	■					
0,7	9200	2026	"	65000					■	■	■	■	■	■					
0,8	9200	1756	"	65000					■	■	■	■	■	■					
0,9	9200	1583	"	65000					■	■	■	■	■	■					
1,1	9200	1301	"	65000					■	■	■	■	■	■					
1,2	9200	1174	"	65000					■	■	■	■	■	■					

* acc. to DIN/EN 50347:2001
For speeds above 1500 1/min, refer to manufacturer

BG-series helical-geared motors

Selection helical-geared geared box with C-coupling

M = 5700 .. 9200 Nm

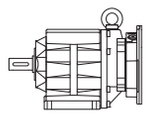

50 Hz		i	Type	F_{RN}	F_{RV}	max. permissible input torque M1 [Nm] *													
n_2	M_2					1	3	3	5	10	20	26	55	105	145	210	290	385	575
(4 pole)	f_B=1,0					IEC Motor Size *													
1/min	Nm			N	N	56	63	71	80	90	100	112	132	160	180	200	225	250	280
1,6	9200	883,7	**BG90G50-..-C/IEC**	65000					■	■	■	■	■	■					
2	9200	714,2	"	65000					■	■	■	■	■	■					
2,2	9200	644,7	"	65000					■	■	■	■	■	■					
2,4	9200	588,8	"	65000					■	■	■	■	■	■					
2,8	9200	504,7	"	65000					■	■	■	■	■	■					
3,2	9200	435,8	"	65000					■	■	■	■	■	■					
3,9	9200	360,3	"	65000					■	■	■	■	■	■					
4,7	9200	298,8	"	65000					■	■	■	■	■	■					
5,3	9200	262,5	"	65000					■	■	■	■	■	■					
6,4	9200	219,9	"	65000					■	■	■	■	■	■					

M = 7200 .. 18500 Nm

50 Hz		i	Type	F_{RN}	F_{RV}	max. permissible input torque M1 [Nm] *													
n_2	M_2					1	3	3	5	10	20	26	55	105	145	210	290	385	575
(4 pole)	f_B=1,0					IEC Motor Size *													
1/min	Nm			N	N	56	63	71	80	90	100	112	132	160	180	200	225	250	280
5,4	16800	259	**BG100-..-C/IEC**	90000								■	■	■					
6	16800	232,6	"	90000								■	■	■					
7	16800	198,8	"	90000								■	■	■	■	■	■	■	■
7,8	16800	178,6	"	90000								■	■	■	■	■	■	■	■
9	16800	154,8	"	90000								■	■	■	■	■	■	■	■
10	16800	139,1	"	90000								■	■	■	■	■	■	■	■
12	16800	119,7	"	90000								■	■	■	■	■	■	■	■
13	16800	107,5	"	90000								■	■	■	■	■	■	■	■
16	16800	90,02	"	90000								■	■	■	■	■	■	■	■
17	16500	80,85	"	90000								■	■	■	■	■	■	■	■
20	15700	70,69	"	90000								■	■	■	■	■	■	■	■
22	15400	63,49	"	90000								■	■	■	■	■	■	■	■
27	14400	51,7	"	90000								■	■	■	■	■	■	■	■
30	14000	46,43	"	90000								■	■	■	■	■	■	■	■
37	13100	37,54	"	90000											■	■	■	■	■
42	12800	33,71	"	88500											■	■	■	■	■
58	11200	23,95	"	87900								■	■	■	■	■	■	■	■
81	10100	17,39	"	82400											■	■	■	■	■
112	7200	12,45	"	72100											■	■	■	■	■
1,7	18500	845,1	**BG100Z-..-C/IEC**	90000						■	■	■	■	■					
1,8	18500	759	"	90000						■	■	■	■	■					
2,1	18500	658,1	"	90000						■	■	■	■	■					
2,4	18500	591,1	"	90000						■	■	■	■	■					
2,8	18500	508,5	"	90000						■	■	■	■	■					
3,1	18500	456,7	"	90000						■	■	■	■	■					
3,7	18500	382,6	"	90000						■	■	■	■	■					
4,1	18500	343,6	"	90000						■	■	■	■	■					
4,7	18500	300,4	"	90000						■	■	■	■	■					
5,2	18500	269,8	"	90000						■	■	■	■	■					
0,11	18500	13093	**BG100G50-..-C/IEC**	90000					■	■	■								
0,12	18500	11813	"	90000					■	■	■								
0,15	18500	9348	"	90000					■	■	■	■	■	■					
0,17	18500	8350	"	90000					■	■	■	■	■	■					
0,19	18500	7533	"	90000					■	■	■	■	■	■					
0,21	18500	6529	"	90000					■	■	■	■	■	■					
0,24	18500	5888	"	90000					■	■	■	■	■	■					
0,29	18500	4839	"	90000					■	■	■	■	■	■					
0,32	18500	4366	"	90000					■	■	■	■	■	■					
0,38	18500	3644	"	90000					■	■	■	■	■	■					
0,43	18500	3286	"	90000					■	■	■	■	■	■					
0,47	18500	2952	"	90000					■	■	■	■	■	■					
0,5	18500	2656	"	90000					■	■	■	■	■	■					
0,6	18500	2154	"	90000					■	■	■	■	■	■					
0,7	18500	1867	"	90000					■	■	■	■	■	■					

* acc. to DIN/EN 50347:2001
For speeds above 1500 1/min, refer to manufacturer

M = 7200 .. 18500 Nm

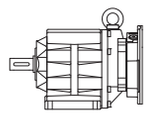

50 Hz		i	Type	F_{RN}	F_{RV}	max. permissible input torque M1 [Nm] *													
n_2	M_2					1	3	3	5	10	20	26	55	105	145	210	290	385	575
(4 pole)	f_B=1,0					IEC Motor Size *													
1/min	Nm			N	N	56	63	71	80	90	100	112	132	160	180	200	225	250	280
0,8	18500	1678	**BG100G50-..-C/IEC**	90000					■	■	■	■	■	■					
1	18500	1444	"	90000					■	■	■	■	■	■					
1,2	18500	1204	"	90000					■	■	■	■	■	■					
1,3	18500	1043	"	90000					■	■	■	■	■	■					
1,4	18500	976,1	"	90000					■	■	■	■	■	■					

* acc. to DIN/EN 50347:2001
For speeds above 1500 1/min, refer to manufacturer

7

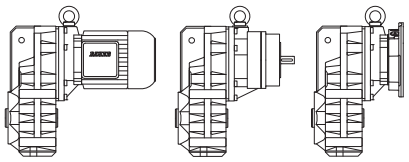

Page

BF-series parallel shaft-geared motors Selection 191-280

Description of parallel shaft-geared units
- Sizes
- Bauer service factors (f_B) for parallel shaft-geared motors
- Continuous operation without switching frequency Z ≤1/h
- Switching duty
- Bauer service factor
- Explanation of shock classification
- Key to abbreviations
- Selection tables, parallel shaft-geared motors

Selection - parallel shaft geared motors IE1
Selection - parallel shaft geared motors IE2
Selection - parallel shaft gearbox with SN input
Selection - parallel shaft gearbox with C-coupling

Sizes

Bauer BF-series shaft-mounted geared motors are normally supplied in ten frame sizes and with torques of 90 to 18,500 Nm. Higher torques are available on request. The gear unit is accommodated in a sturdy cast housing

Bauer service factors (f_B) for shaft-mounted geared motors

Of the numerous factors influencing the total loading of a gear unit, the most important include:

- Mean torque (rated torque)
- Daily operating hours
- Severity of torque peaks (shock classification)
- Frequency of torque peaks (switching duty)

These factors can be represented in a simplified and practical manner by **service factors**. The tables and explanations below attempt to provide an objective description of the **shock classification**, rather than a classification of the driven machinery. Experience has shown that, in addition to the torque shocks caused by the driven machinery (M_x/M_N), above all the power transmission components (clutches, chains etc.) plus the mass ratios play a decisive role in this.

See Bauer special imprint SD32 for more information.

Continuous operation without switching frequency Z ≤1/h

Factor f_1 for shock classification and operating time

Shock classification	Operating hours per day t_d	>4 h ≤8 h	>8 h ≤16 h	>16 h ≤24 h
I		0,8	1,0	1,2
II		1,05	1,25	1,45
III		1,45	1,55	1,7

Switching duty

Factor f_2 for shock classification and switching frequency

Switching frequency in single- shift operation t_d ≤8 h/d

Shock classification	1 <Z ≤100	100 <Z ≤1000	1000 <Z
I	0,95	1,1	1,15
II	1,2	1,35	1,4
III	1,55	1,6	1,6

Switching frequency in multiple- shift operation t_d >8 h/d

Shock classification	1 <Z ≤100	100 <Z ≤1000	1000 <Z
I	1,3	1,45	1,5
II	1,5	1,6	1,65
III	1,75	1,8	1,8

Bauer service factor

Bauer Service factor $f_B = f_1$ or $f_B = f_2$

For example: Shock classification II for Z = 100 switching operations per hour and multiple-shift operation yields a service factor $f_B = f_2 = 1.5$

Explanation of shock classification

Shock classification I:
Uniform without shock loads. All the following requirements must be satisfied:

- FI ≤1,3
- M_x/M_N ≤1,0
- Shock-absorbing power transmission components (e.g. highly resilient, zero-play coupling, φ N ≥5°)

Shock classification II:
Moderate shock loads. At least one of the following conditions applies:
- 1,3 <FI ≤4
- 1 <M_x/M_N ≤1,6
- Shock-neutral power transmission components (e.g. gear wheels, zero- play rigid coupling or resilient coupling with φ N <5°)

Shock classification III:
Heavy shock loads. At least one of the following conditions applies:
- FI >4
- 1,6 <M_x/M_N ≤2,0
- Shock-amplifying power transmission components (e.g. coupling with play or chain drive)

Key to abbreviations

Z	Switching duty number of switching operations per hour
t_d	Daily operating time in hours (h/d)
FI	Factor of inertia FI = $(J_{ext} + J_{rot})/J_{rot}$
J_{ext}	Mass moment of inertia of the machine to be driven, in relation to the motor's rotor shaft (kgm^2)
J_{rot}	Mass moment of inertia of the motor rotor (kgm^2)
M_x	Highest impact torque above the static torque which can occur during normal operation or in emergency situations
M_N	Required static load torque for the application
M_x/M_N	Relative torque - Factor
φ_N	Torsional offset of the resilient coupling under rated torque

Selection tables, shaft-mounted geared motors

Key to abbreviations

P	Rated output
n_2	Rated speed of the output shaft
i	Gear reduction ratio
M_2	Rated torque at the output shaft
f_B	Bauer service factor
F_{RN}	Maximum permissible radial force with normal bearings
F_{RV}	Maximum permissible radial force with reinforced bearings in each case with standard solid shaft (Code -.1 und -.2)

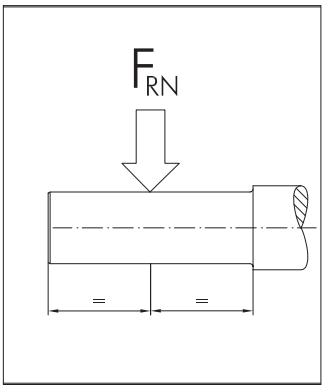

Use the selection tables to determine the size of geared motor required. The codes clearly define the Type of gear unit and output shaft (see chapter 11 „dimensional drawings shaft-mounted gear motors").

The torques marked (*) are maximum permissible torques for service factor f_B=1,0.

Motor power overload protection
Motor-power ratings, particularly in conjunction with four-stage and multi-stage gear units, are more than ample in some instances. Consequently, and in much the same way as with low-power motors, rated current is not a measure of gear loading and cannot be used to protect the gear unit against overloading. It is advisable to provide gears at risk from excessive load or blockage with a protective mechanism (e. g., sliding clutch, sliding hub, shear pin or an alternative).

P = 0.03 kW

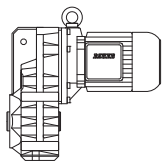

50 Hz			i	Type	m	F_{RN}	F_{RV}	60 Hz		
n_2	M_2	f_B						n_2	M_2	f_B
1/min	Nm				kg	N	N	1/min	Nm	
9.0	**31.5**	**7.6**	151.2	**BF10Z-../D04LA4**	21	6400	-	11	26	9.2
8.2	**34.5**	**7.0**	166.2	"	"	6400	-	9.8	29	8.3
7.5	**38**	**6.3**	180.1	"	"	6400	-	9.0	31.5	7.6
6.9	**41.5**	**5.8**	198.0	"	"	6400	-	8.2	34.5	7.0
6.3	**45**	**5.3**	214.5	"	"	6400	-	7.6	37.5	6.4
5.8	**49**	**4.9**	235.8	"	"	6400	-	6.9	41.5	5.8
5.3	**54**	**4.4**	257.4	"	"	6400	-	6.3	45	5.3
4.8	**59**	**4.1**	283.1	"	"	6400	-	5.8	49	4.9
4.2	**68**	**3.5**	324.3	"	"	6400	-	5.0	57	4.2
3.8	**75**	**3.2**	356.6	"	"	6400	-	4.6	62	3.9
3.6	**79**	**3.0**	380.2	"	"	6400	-	4.3	66	3.6
3.3	**86**	**2.8**	418.0	"	"	6400	-	3.9	73	3.3
2.9	**98**	**2.4**	469.5	"	"	6400	-	3.5	81	3.0
2.6	**110**	**2.2**	539.1	"	"	6400	-	3.1	92	2.6
2.3	**124**	**1.95**	592.8	"	"	6400	-	2.8	102	2.4
1.8	**97**	**2.7**	768.2	**BF10G06-../D04LA4**	25	6400	-	2.2	68	3.8
1.6	**110**	**2.4**	845.1	"	"	6400	-	2.0	75	3.5
1.4	**130**	**2.0**	994.0	"	"	6400	-	1.7	94	2.8
1.2	**159**	**1.65**	1190	"	"	6400	-	1.4	125	2.1
0.95	**210**	**1.25**	1452	"	"	6400	-	1.2	150	1.75
0.8	**260***	**1.0**	1744	"	"	6400	-	0.95	260	1.0
0.65	**260***	**1.0**	2096	"	"	6400	-	0.8	260	1.0
0.55	**260***	**1.0**	2467	"	"	6400	-	0.7	260	1.0
0.46	**260***	**1.0**	2952	"	"	6400	-	0.55	260	1.0
0.42	**260***	**1.0**	3220	"	"	6400	-	0.55	260	1.0
0.35	**260***	**1.0**	3942	"	"	6400	-	0.42	260	1.0
0.3	**260***	**1.0**	4569	"	"	6400	-	0.36	260	1.0
0.24	**260***	**1.0**	5709	"	"	6400	-	0.29	260	1.0
0.21	**260***	**1.0**	6550	"	"	6400	-	0.25	260	1.0
0.19	**260***	**1.0**	7144	"	"	6400	-	0.23	260	1.0
0.16	**260***	**1.0**	8681	"	"	6400	-	0.19	260	1.0
0.15	**260***	**1.0**	9471	"	"	6400	-	0.18	260	1.0
1.2	**162**	**2.8**	1140	**BF20G06-../D04LA4**	31	7900	-	1.5	114	4.0
1.0	**200**	**2.3**	1392	"	"	7900	-	1.2	154	3.0
0.9	**230**	**2.0**	1533	"	"	7900	-	1.1	173	2.7
0.8	**265**	**1.75**	1764	"	"	7900	-	0.95	210	2.2
0.65	**345**	**1.35**	2192	"	"	7900	-	0.75	285	1.6
0.55	**410**	**1.1**	2579	"	"	7900	-	0.65	330	1.4
0.48	**460***	**1.0**	2829	"	"	7900	-	0.6	460	1.0
0.44	**460***	**1.0**	3086	"	"	7900	-	0.55	460	1.0
0.36	**460***	**1.0**	3778	"	"	7900	-	0.43	460	1.0
0.31	**460***	**1.0**	4379	"	"	7900	-	0.37	460	1.0
0.25	**460***	**1.0**	5471	"	"	7900	-	0.3	460	1.0
0.2	**460***	**1.0**	6847	"	"	7900	-	0.24	460	1.0
0.17	**460***	**1.0**	8320	"	"	7900	-	0.2	460	1.0
0.15	**460***	**1.0**	9077	"	"	7900	-	0.18	460	1.0
1.0	**200**	**3.2**	1404	**BF30G06-../D04LA4**	41	7400	-	1.2	153	4.1
0.85	**245**	**2.6**	1686	"	"	7400	-	1.0	196	3.2
0.7	**315**	**2.0**	2026	"	"	7400	-	0.8	260	2.4
0.6	**370**	**1.7**	2386	"	"	7400	-	0.7	305	2.1
0.48	**485**	**1.3**	2854	"	"	7400	-	0.6	365	1.75
0.39	**610**	**1.05**	3493	"	"	7400	-	0.47	485	1.3
0.36	**630***	**1.0**	3811	"	"	7400	-	0.43	630	1.0
0.31	**630***	**1.0**	4417	"	"	7400	-	0.37	630	1.0
0.27	**630***	**1.0**	5060	"	"	7400	-	0.33	630	1.0
0.22	**630***	**1.0**	6333	"	"	7400	-	0.26	630	1.0
0.19	**630***	**1.0**	7206	"	"	7400	-	0.23	630	1.0
0.18	**630***	**1.0**	7861	"	"	7400	-	0.21	630	1.0
0.15	**630***	**1.0**	9157	"	"	7400	-	0.18	630	1.0

P = 0.04 kW

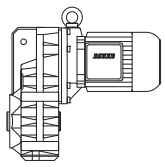

50 Hz			i	Type	m	F_{RN}	F_{RV}	60 Hz		
n_2	M_2	f_B						n_2	M_2	f_B
1/min	Nm				kg	N	N	1/min	Nm	
9.0	**42**	**5.7**	151.2	**BF10Z-../D04LA4**	21	6400	-	11	34.5	7.0
8.2	**46.5**	**5.2**	166.2	"	"	6400	-	9.8	38.5	6.2
7.5	**50**	**4.8**	180.1	"	"	6400	-	9.0	42	5.7
6.9	**55**	**4.4**	198.0	"	"	6400	-	8.2	46.5	5.2
6.3	**60**	**4.0**	214.5	"	"	6400	-	7.6	50	4.8
5.8	**65**	**3.7**	235.8	"	"	6400	-	6.9	55	4.4
5.3	**72**	**3.3**	257.4	"	"	6400	-	6.3	60	4.0
4.8	**79**	**3.0**	283.1	"	"	6400	-	5.8	65	3.7
4.2	**90**	**2.7**	324.3	"	"	6400	-	5.0	76	3.2
3.8	**100**	**2.4**	356.6	"	"	6400	-	4.6	83	2.9
3.6	**106**	**2.3**	380.2	"	"	6400	-	4.3	88	2.7
3.3	**115**	**2.1**	418.0	"	"	6400	-	3.9	97	2.5
2.9	**131**	**1.85**	469.5	"	"	6400	-	3.5	109	2.2
2.6	**146**	**1.65**	539.1	"	"	6400	-	3.1	123	1.95
2.3	**166**	**1.45**	592.8	"	"	6400	-	2.8	136	1.75
2.1	**119**	**2.2**	643.8	**BF10G06-../D04LA4**	25	6400	-	2.6	84	3.1
1.8	**150**	**1.75**	768.2	"	"	6400	-	2.2	111	2.3
1.6	**170**	**1.55**	845.1	"	"	6400	-	2.0	122	2.1
1.4	**199**	**1.3**	994.0	"	"	6400	-	1.7	150	1.75
1.2	**235**	**1.1**	1190	"	"	6400	-	1.4	193	1.35
3.0	**127**	**3.3**	460.0	**BF20Z-../D04LA4**	28	7900	-	3.6	106	4.0
1.9	**141**	**3.3**	736.1	**BF20G06-../D04LA4**	31	7900	-	2.3	106	4.3
1.7	**159**	**2.9**	810.0	"	"	7900	-	2.0	125	3.7
1.5	**183**	**2.5**	952.7	"	"	7900	-	1.8	141	3.3
1.2	**240**	**1.9**	1140	"	"	7900	-	1.5	178	2.6
1.0	**295**	**1.55**	1392	"	"	7900	-	1.2	230	2.0
0.9	**335**	**1.35**	1533	"	"	7900	-	1.1	260	1.75
0.8	**385**	**1.2**	1764	"	"	7900	-	0.95	310	1.5
1.2	**240**	**2.6**	1150	**BF30G06-../D04LA4**	41	7400	-	1.5	177	3.6
1.1	**265**	**2.4**	1286	"	"	7400	-	1.3	210	3.0
1.0	**295**	**2.1**	1404	"	"	7400	-	1.2	230	2.7
0.85	**355**	**1.75**	1686	"	"	7400	-	1.0	290	2.2
0.7	**450**	**1.4**	2026	"	"	7400	-	0.8	380	1.65
0.6	**530**	**1.2**	2386	"	"	7400	-	0.7	440	1.45

P = 0.06 kW

50 Hz			i	Type	m	F_{RN}	F_{RV}	60 Hz		
n_2	M_2	f_B						n_2	M_2	f_B
1/min	Nm				kg	N	N	1/min	Nm	
51	**11.2**	**8.5**	26.76	**BF06-../D05LA4**	10	3000	-	61	9.3	10
43	**13.3**	**7.1**	31.50	"	"	3200	-	52	11	8.6
36	**15.9**	**6.0**	37.69	"	"	3500	-	43	13.3	7.1
29.5	**19.4**	**4.9**	46.14	"	"	3800	-	35.5	16.1	5.9
23.5	**24**	**4.0**	58.33	"	"	4000	-	28	20	4.8
20.5	**27.5**	**3.5**	66.82	"	"	4000	-	24.5	23	4.1
16.5	**34.5**	**2.8**	83.61	"	"	4000	-	19.5	29	3.3
14.5	**39.5**	**2.4**	95.16	"	"	4000	-	17.5	32.5	2.9
12.5	**45.5**	**1.8**	110.8	"	"	4000	-	15	38	2.1
7.5	**76**	**3.2**	180.1	**BF10Z-../D06LA4**	24	6400	-	9.0	63	3.8
6.9	**83**	**2.9**	198.0	"	"	6400	-	8.2	69	3.5
6.3	**90**	**2.7**	214.5	"	"	6400	-	7.6	75	3.2
5.8	**98**	**2.4**	235.8	"	"	6400	-	6.9	83	2.9
5.3	**108**	**2.2**	257.4	"	"	6400	-	6.3	90	2.7
4.8	**119**	**2.0**	283.1	"	"	6400	-	5.8	98	2.4

P = 0.06 kW

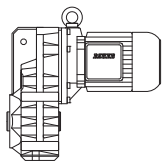

50 Hz			i	Type	m	F_{RN}	F_{RV}	60 Hz		
n_2	M_2	f_B						n_2	M_2	f_B
1/min	Nm				kg	N	N	1/min	Nm	
4.2	**136**	**1.75**	324.3	**BF10Z-../D06LA4**	"	6400	-	5.0	114	2.1
3.8	**150**	**1.6**	356.6	"	"	6400	-	4.6	124	1.95
3.6	**159**	**1.5**	380.2	"	"	6400	-	4.3	133	1.8
3.3	**173**	**1.4**	418.0	"	"	6400	-	3.9	146	1.65
2.9	**197**	**1.2**	469.5	"	"	6400	-	3.5	163	1.45
2.6	**220**	**1.1**	539.1	"	"	6400	-	3.1	184	1.3
2.3	**245**	**0.98**	592.8	"	"	6400	-	2.8	200	1.2
2.1	**210**	**1.25**	643.8	**BF10G06-../D06LA4**	28	6400	-	2.6	157	1.65
1.8	**255**	**1.0**	768.2	"	"	6400	-	2.2	198	1.3
1.6	**290**	**0.9**	845.1	"	"	6400	-	2.0	215	1.2
4.2	**136**	**3.1**	325.2	**BF20Z-../D06LA4**	31	7900	-	5.0	114	3.7
4.0	**143**	**2.9**	339.1	"	"	7900	-	4.8	119	3.5
3.7	**154**	**2.7**	373.1	"	"	7900	-	4.4	130	3.2
3.3	**173**	**2.4**	418.1	"	"	7900	-	3.9	146	2.9
3.0	**191**	**2.2**	460.0	"	"	7900	-	3.6	159	2.6
2.7	**157**	**2.9**	513.7	**BF20G06-../D06LA4**	34	7900	-	3.2	124	3.7
2.2	**200**	**2.3**	617.0	"	"	7900	-	2.7	152	3.0
1.9	**240**	**1.9**	736.1	"	"	7900	-	2.3	189	2.4
1.7	**270**	**1.7**	810.0	"	"	7900	-	2.0	220	2.1
1.5	**310**	**1.5**	952.7	"	"	7900	-	1.8	245	1.9
1.2	**400**	**1.15**	1140	"	"	7900	-	1.5	305	1.5
1.0	**485**	**0.95**	1392	"	"	7900	-	1.2	390	1.2
3.3	**173**	**3.3**	412.6	**BF30Z-../D06LA4**	42	7400	-	4.0	143	4.0
3.0	**191**	**3.0**	463.3	"	"	7400	-	3.5	163	3.5
2.6	**220**	**2.6**	537.0	"	"	7400	-	3.1	184	3.1
2.3	**245**	**2.3**	590.7	"	"	7400	-	2.8	200	2.9
2.2	**200**	**3.2**	622.4	**BF30G06-../D06LA4**	45	7400	-	2.7	151	4.2
2.0	**225**	**2.8**	705.1	"	"	7400	-	2.3	192	3.3
1.7	**270**	**2.3**	817.1	"	"	7400	-	2.0	220	2.9
1.5	**310**	**2.0**	961.1	"	"	7400	-	1.7	265	2.4
1.2	**400**	**1.6**	1150	"	"	7400	-	1.5	305	2.1
1.1	**435**	**1.45**	1286	"	"	7400	-	1.3	355	1.75
1.0	**485**	**1.3**	1404	"	"	7400	-	1.2	390	1.6
0.85	**580**	**1.1**	1686	"	"	7400	-	1.0	480	1.3
0.95	**340**	**2.9**	1484	**BF40G10-../D06LA4**	58	10600	-	1.1	255	3.9
0.75	**460**	**2.2**	1810	"	"	10600	-	0.9	335	3.0
0.7	**500**	**2.0**	1997	"	"	10600	-	0.85	360	2.8
0.55	**710**	**1.4**	2536	"	"	10600	-	0.65	550	1.8
0.49	**840**	**1.2**	2810	"	"	10600	-	0.6	620	1.6
0.7	**520**	**2.7**	2059	**BF50G10-../D06LA4**	86	13600	-	0.8	415	3.4
0.6	**640**	**2.2**	2360	"	"	13600	-	0.7	510	2.7
0.49	**860**	**1.65**	2810	"	"	13600	-	0.6	640	2.2
0.41	**1090**	**1.3**	3348	"	"	13600	-	0.49	860	1.65
0.34	**1370**	**1.0**	4019	"	"	13600	-	0.41	1090	1.3
0.42	**860**	**2.9**	3237	**BF60G20-../D06LA4**	134	15300	43300	0.55	530	4.7
0.35	**1130**	**2.2**	3883	"	"	15300	43300	0.42	860	2.9
0.3	**1400**	**1.8**	4646	"	"	15300	43300	0.35	1130	2.2
0.26	**1700**	**1.45**	5241	"	"	15300	43300	0.31	1340	1.85
0.23	**1980**	**1.25**	6014	"	"	15300	43300	0.27	1620	1.55
0.21	**2200**	**1.15**	6679	"	"	15300	43300	0.25	1790	1.4
0.24	**1890**	**3.0**	5691	**BF70G20-../D06LA4**	212	16100	47700	0.29	1480	3.9
0.21	**2200**	**2.6**	6530	"	"	16100	47700	0.25	1800	3.2
0.19	**2500**	**2.3**	7248	"	"	16100	47700	0.23	2000	2.9
0.17	**2850**	**2.0**	8052	"	"	16100	47700	0.21	2200	2.6

P = 0.09 kW

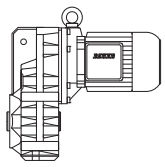

50 Hz			i	Type	m	F_{RN}	F_{RV}	60 Hz		
n_2	M_2	f_B						n_2	M_2	f_B
1/min	Nm				kg	N	N	1/min	Nm	
112	**7.6**	**9.9**	12.07	**BF06-../D05LA4**	10	2000	-	135	6.3	12
96	**8.9**	**9.6**	14.21	"	"	2100	-	115	7.4	11
80	**10.7**	**8.9**	16.99	"	"	2500	-	96	8.9	11
67	**12.8**	**7.4**	20.42	"	"	2700	-	80	10.7	8.9
51	**16.8**	**5.7**	26.76	"	"	3000	-	61	14	6.8
43	**19.9**	**4.8**	31.50	"	"	3200	-	52	16.5	5.8
36	**23.5**	**4.0**	37.69	"	"	3500	-	43	19.9	4.8
29.5	**29**	**3.3**	46.14	"	"	3800	-	35.5	24	4.0
23.5	**36.5**	**2.6**	58.33	"	"	4000	-	28	30.5	3.1
20.5	**41.5**	**2.3**	66.82	"	"	4000	-	24.5	35	2.7
16.5	**52**	**1.85**	83.61	"	"	4000	-	19.5	44	2.2
14.5	**59**	**1.6**	95.16	"	"	4000	-	17.5	49	1.95
12.5	**68**	**1.2**	110.8	"	"	4000	-	15	57	1.4
11	**78**	**3.1**	123.5	**BF10-../D06LA4**	23	6100	-	13.5	63	3.8
10.5	**81**	**3.0**	128.9	"	"	6200	-	13	66	3.6
9.6	**89**	**2.7**	141.8	"	"	6400	-	11.5	74	3.2
9.0	**95**	**2.5**	151.2	**BF10Z-../D06LA4**	24	6400	-	11	78	3.1
8.2	**104**	**2.3**	166.2	"	"	6400	-	9.8	87	2.8
7.5	**114**	**2.1**	180.1	"	"	6400	-	9.0	95	2.5
6.9	**124**	**1.95**	198.0	"	"	6400	-	8.2	104	2.3
6.3	**136**	**1.75**	214.5	"	"	6400	-	7.6	113	2.1
5.8	**148**	**1.6**	235.8	"	"	6400	-	6.9	124	1.95
5.3	**162**	**1.5**	257.4	"	"	6400	-	6.3	136	1.75
4.8	**179**	**1.35**	283.1	"	"	6400	-	5.8	148	1.6
4.2	**200**	**1.2**	324.3	"	"	6400	-	5.0	171	1.4
3.8	**225**	**1.05**	356.6	"	"	6400	-	4.6	186	1.3
3.6	**235**	**1.0**	380.2	"	"	6400	-	4.3	199	1.2
3.3	**260**	**0.92**	418.0	"	"	6400	-	3.9	220	1.1
2.9	**295**	**0.81**	469.5	"	"	6400	-	3.5	245	0.98
2.6	**270**	**0.96**	536.0	**BF10G06-../D06LA4**	28	6400	-	3.1	220	1.2
6.3	**136**	**3.1**	216.9	**BF20Z-../D06LA4**	31	7900	-	7.5	114	3.7
5.8	**148**	**2.8**	235.9	"	"	7900	-	6.9	124	3.4
5.3	**162**	**2.6**	259.6	"	"	7900	-	6.3	136	3.1
4.6	**186**	**2.3**	295.5	"	"	7900	-	5.5	156	2.7
4.2	**200**	**2.1**	325.2	"	"	7900	-	5.0	171	2.5
4.0	**210**	**2.0**	339.1	"	"	7900	-	4.8	179	2.3
3.7	**230**	**1.85**	373.1	"	"	7900	-	4.4	195	2.2
3.3	**260**	**1.6**	418.1	"	"	7900	-	3.9	220	1.9
3.0	**285**	**1.45**	460.0	"	"	7900	-	3.6	235	1.8
2.7	**260**	**1.75**	513.7	**BF20G06-../D06LA4**	34	7900	-	3.2	210	2.2
2.2	**330**	**1.4**	617.0	"	"	7900	-	2.7	255	1.8
1.9	**390**	**1.2**	736.1	"	"	7900	-	2.3	310	1.5
1.7	**440**	**1.05**	810.0	"	"	7900	-	2.0	360	1.3
1.5	**500**	**0.92**	952.7	"	"	7900	-	1.8	405	1.15
4.7	**182**	**3.2**	289.8	**BF30Z-../D06LA4**	42	7400	-	5.6	153	3.8
4.4	**195**	**2.9**	310.7	"	"	7400	-	5.3	162	3.5
4.0	**210**	**2.7**	341.8	"	"	7400	-	4.8	179	3.2
3.6	**235**	**2.4**	375.1	"	"	7400	-	4.4	195	2.9
3.3	**260**	**2.2**	412.6	"	"	7400	-	4.0	210	2.7
3.0	**285**	**2.0**	463.3	"	"	7400	-	3.5	245	2.3
2.6	**330**	**1.75**	537.0	"	"	7400	-	3.1	275	2.1
2.3	**370**	**1.55**	590.7	"	"	7400	-	2.8	305	1.9
2.2	**330**	**1.9**	622.4	**BF30G06-../D06LA4**	45	7400	-	2.7	255	2.5
2.0	**370**	**1.7**	705.1	"	"	7400	-	2.3	315	2.0
1.7	**435**	**1.45**	817.1	"	"	7400	-	2.0	360	1.75
1.5	**500**	**1.25**	961.1	"	"	7400	-	1.7	430	1.45
1.2	**630**	**1.0**	1150	"	"	7400	-	1.5	495	1.25
1.1	**690**	**0.91**	1286	"	"	7400	-	1.3	570	1.1
1.0	**770**	**0.82**	1404	"	"	7400	-	1.2	630	1.0

P = 0.09 kW

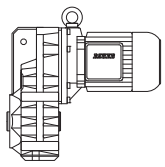

50 Hz			i	Type	m	F_{RN}	F_{RV}	60 Hz		
n_2	M_2	f_B						n_2	M_2	f_B
1/min	Nm				kg	N	N	1/min	Nm	
3.0	**285**	**3.2**	459.1	**BF40Z-../D06LA4**	53	10600	-	3.6	235	3.8
2.7	**315**	**2.9**	514.6	"	"	10600	-	3.2	265	3.4
2.4	**355**	**2.5**	566.1	"	"	10600	-	2.9	295	3.1
1.5	**350**	**2.9**	928.9	**BF40G10-../D06LA4**	58	10600	-	1.8	255	3.9
1.3	**420**	**2.4**	1106	"	"	10600	-	1.5	330	3.0
1.1	**540**	**1.85**	1324	"	"	10600	-	1.3	425	2.4
0.95	**640**	**1.55**	1484	"	"	10600	-	1.1	510	1.95
0.75	**840**	**1.2**	1810	"	"	10600	-	0.9	650	1.55
0.7	**910**	**1.1**	1997	"	"	10600	-	0.85	690	1.45
1.2	**500**	**2.8**	1203	**BF50G10-../D06LA4**	86	13600	-	1.4	400	3.5
1.0	**620**	**2.3**	1359	"	"	13600	-	1.2	475	2.9
0.9	**680**	**2.1**	1520	"	"	13600	-	1.1	510	2.7
0.85	**730**	**1.9**	1684	"	"	13600	-	1.0	570	2.5
0.7	**920**	**1.5**	2059	"	"	13600	-	0.8	770	1.8
0.6	**1120**	**1.25**	2360	"	"	13600	-	0.7	920	1.5
0.7	**780**	**3.2**	1955	**BF60G20-../D06LA4**	134	15300	43300	0.85	560	4.5
0.65	**860**	**2.9**	2172	"	"	15300	43300	0.75	680	3.7
0.49	**1250**	**2.0**	2781	"	"	15300	43300	0.6	930	2.7
0.42	**1540**	**1.6**	3237	"	"	15300	43300	0.55	1060	2.4
0.35	**1950**	**1.3**	3883	"	"	15300	43300	0.42	1540	1.6
0.3	**2350**	**1.05**	4646	"	"	15300	43300	0.35	1950	1.3
0.34	**2000**	**2.9**	4090	**BF70G20-../D06LA4**	212	16100	47700	0.4	1650	3.5
0.3	**2350**	**2.4**	4542	"	"	16100	47700	0.36	1890	3.0
0.27	**2650**	**2.2**	5124	"	"	16100	47700	0.32	2150	2.7
0.24	**3050**	**1.85**	5691	"	"	16100	47700	0.29	2450	2.3
0.21	**3600**	**1.6**	6530	"	"	16100	47700	0.25	2900	1.95
0.19	**4000**	**1.45**	7248	"	"	16100	47700	0.23	3200	1.8
0.17	**4550**	**1.25**	8052	"	"	16100	47700	0.21	3600	1.6

P = 0.12 kW

50 Hz			i	Type	m	F_{RN}	F_{RV}	60 Hz		
n_2	M_2	f_B						n_2	M_2	f_B
1/min	Nm				kg	N	N	1/min	Nm	
147	**7.7**	**9.1**	9.21	**BF06-../D05LA4**	10	1900	-	176	6.5	11
112	**10.2**	**7.4**	12.07	"	"	2000	-	135	8.4	8.9
96	**11.9**	**7.1**	14.21	"	"	2100	-	115	9.9	8.6
80	**14.3**	**6.6**	16.99	"	"	2500	-	96	11.9	8.0
67	**17.1**	**5.6**	20.42	"	"	2700	-	80	14.3	6.6
51	**22**	**4.3**	26.76	"	"	3000	-	61	18.7	5.1
43	**26.5**	**3.6**	31.50	"	"	3200	-	52	22	4.3
36	**31.5**	**3.0**	37.69	"	"	3500	-	43	26.5	3.6
29.5	**38.5**	**2.5**	46.14	"	"	3800	-	35.5	32	3.0
23.5	**48.5**	**1.95**	58.33	"	"	4000	-	28	40.5	2.3
20.5	**55**	**1.75**	66.82	"	"	4000	-	24.5	46.5	2.0
16.5	**69**	**1.4**	83.61	"	"	4000	-	19.5	58	1.65
14.5	**79**	**1.2**	95.16	"	"	4000	-	17.5	65	1.45
12.5	**91**	**0.89**	110.8	"	"	4000	-	15	76	1.05
15	**76**	**3.2**	90.91	**BF10-../D06LA4**	23	5400	-	18	63	3.8
14	**81**	**3.0**	99.97	"	"	5600	-	16.5	69	3.5
12.5	**91**	**2.6**	112.3	"	"	5900	-	14.5	79	3.0
11	**104**	**2.3**	123.5	"	"	6100	-	13.5	84	2.9
10.5	**109**	**2.2**	128.9	"	"	6200	-	13	88	2.7
9.6	**119**	**2.0**	141.8	"	"	6400	-	11.5	99	2.4
9.0	**127**	**1.9**	151.2	**BF10Z-../D06LA4**	24	6400	-	11	104	2.3
8.2	**139**	**1.75**	166.2	"	"	6400	-	9.8	116	2.1
7.5	**152**	**1.6**	180.1	"	"	6400	-	9.0	127	1.9
6.9	**166**	**1.45**	198.0	"	"	6400	-	8.2	139	1.75

P = 0.12 kW

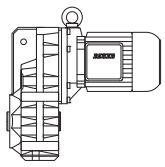

50 Hz			i	Type	m	F_{RN}	F_{RV}	60 Hz		
n_2	M_2	f_B						n_2	M_2	f_B
1/min	Nm				kg	N	N	1/min	Nm	
6.3	**181**	**1.35**	214.5	**BF10Z-../D06LA4**	"	6400	-	7.6	150	1.6
5.8	**197**	**1.2**	235.8	"	"	6400	-	6.9	166	1.45
5.3	**215**	**1.1**	257.4	"	"	6400	-	6.3	181	1.35
4.8	**235**	**1.0**	283.1	"	"	6400	-	5.8	197	1.2
4.2	**270**	**0.89**	324.3	"	"	6400	-	5.0	225	1.05
3.8	**300**	**0.8**	356.6	"	"	6400	-	4.6	245	0.98
3.6	**275**	**0.95**	377.9	**BF10G06-../D06LA4**	28	6400	-	4.3	225	1.15
3.2	**310**	**0.84**	424.5	"	"	6400	-	3.9	245	1.05
8.7	**131**	**3.2**	155.4	**BF20Z-../D06LA4**	31	7900	-	10.5	109	3.9
8.3	**138**	**3.0**	164.3	"	"	7900	-	9.9	115	3.7
7.5	**152**	**2.8**	180.8	"	"	7900	-	9.0	127	3.3
6.9	**166**	**2.5**	197.1	"	"	7900	-	8.3	138	3.0
6.3	**181**	**2.3**	216.9	"	"	7900	-	7.5	152	2.8
5.8	**197**	**2.1**	235.9	"	"	7900	-	6.9	166	2.5
5.3	**215**	**1.95**	259.6	"	"	7900	-	6.3	181	2.3
4.6	**245**	**1.7**	295.5	"	"	7900	-	5.5	205	2.0
4.2	**270**	**1.55**	325.2	"	"	7900	-	5.0	225	1.85
4.0	**285**	**1.45**	339.1	"	"	7900	-	4.8	235	1.8
3.7	**305**	**1.4**	373.1	"	"	7900	-	4.4	260	1.6
3.3	**345**	**1.2**	418.1	"	"	7900	-	3.9	290	1.45
3.0	**380**	**1.1**	460.0	"	"	7900	-	3.6	315	1.35
2.7	**370**	**1.25**	513.7	**BF20G06-../D06LA4**	34	7900	-	3.2	300	1.55
2.2	**460**	**1.0**	617.0	"	"	7900	-	2.7	360	1.3
1.9	**540**	**0.85**	736.1	"	"	7900	-	2.3	435	1.05
6.1	**187**	**3.1**	224.8	**BF30Z-../D06LA4**	42	7400	-	7.3	156	3.7
5.5	**205**	**2.8**	247.3	"	"	7400	-	6.6	173	3.3
5.2	**220**	**2.6**	263.5	"	"	7400	-	6.2	184	3.1
4.7	**240**	**2.4**	289.8	"	"	7400	-	5.6	200	2.9
4.4	**260**	**2.2**	310.7	"	"	7400	-	5.3	215	2.7
4.0	**285**	**2.0**	341.8	"	"	7400	-	4.8	235	2.4
3.6	**315**	**1.85**	375.1	"	"	7400	-	4.4	260	2.2
3.3	**345**	**1.65**	412.6	"	"	7400	-	4.0	285	2.0
3.0	**380**	**1.5**	463.3	"	"	7400	-	3.5	325	1.75
2.6	**440**	**1.3**	537.0	"	"	7400	-	3.1	365	1.6
2.3	**495**	**1.15**	590.7	"	"	7400	-	2.8	405	1.4
2.2	**460**	**1.35**	622.4	**BF30G06-../D06LA4**	45	7400	-	2.7	360	1.75
2.0	**510**	**1.25**	705.1	"	"	7400	-	2.3	440	1.45
1.7	**600**	**1.05**	817.1	"	"	7400	-	2.0	500	1.25
1.5	**690**	**0.91**	961.1	"	"	7400	-	1.7	600	1.05
4.2	**270**	**3.3**	324.7	**BF40Z-../D06LA4**	53	10600	-	5.0	225	4.0
3.9	**290**	**3.1**	346.8	"	"	10600	-	4.7	240	3.8
3.6	**315**	**2.9**	381.5	"	"	10600	-	4.3	265	3.4
3.3	**345**	**2.6**	417.3	"	"	10600	-	3.9	290	3.1
3.0	**380**	**2.4**	459.1	"	"	10600	-	3.6	315	2.9
2.7	**420**	**2.1**	514.6	"	"	10600	-	3.2	355	2.5
2.4	**475**	**1.9**	566.1	"	"	10600	-	2.9	395	2.3
2.3	**310**	**3.2**	597.3	**BF40G10-../D06LA4**	58	10600	-	2.8	220	4.5
1.9	**395**	**2.5**	731.6	"	"	10600	-	2.3	290	3.4
1.5	**540**	**1.85**	928.9	"	"	10600	-	1.8	410	2.4
1.3	**640**	**1.55**	1106	"	"	10600	-	1.5	520	1.9
1.1	**800**	**1.25**	1324	"	"	10600	-	1.3	640	1.55
0.95	**940**	**1.05**	1484	"	"	10600	-	1.1	780	1.3
2.8	**405**	**3.2**	496.4	**BF50Z-../D06LA4**	82	13600	-	3.3	345	3.8
2.5	**455**	**2.9**	555.2	"	"	13600	-	3.0	380	3.4
1.6	**500**	**2.8**	864.5	**BF50G10-../D06LA4**	86	13600	-	1.9	395	3.5
1.4	**590**	**2.4**	1029	"	"	13600	-	1.6	490	2.9
1.2	**740**	**1.9**	1203	"	"	13600	-	1.4	600	2.3
1.0	**900**	**1.55**	1359	"	"	13600	-	1.2	710	1.95
0.9	**1000**	**1.4**	1520	"	"	13600	-	1.1	770	1.8

P = 0.12 kW

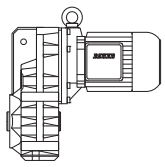

50 Hz			i	Type	m	F_{RN}	F_{RV}	60 Hz		
n_2	M_2	f_B						n_2	M_2	f_B
1/min	Nm				kg	N	N	1/min	Nm	
0.85	**1060**	**1.3**	1684	**BF50G10-../D06LA4**	"	13600	-	1.0	860	1.65
0.7	**1330**	**1.05**	2059	"	"	13600	-	0.8	1130	1.25
0.95	**820**	**3.0**	1494	**BF60G20-../D06LA4**	134	15300	43300	1.1	660	3.8
0.85	**920**	**2.7**	1658	"	"	15300	43300	1.0	720	3.5
0.7	**1190**	**2.1**	1955	"	"	15300	43300	0.85	900	2.8
0.65	**1300**	**1.9**	2172	"	"	15300	43300	0.75	1060	2.4
0.49	**1830**	**1.35**	2781	"	"	15300	43300	0.6	1400	1.8
0.42	**2200**	**1.15**	3237	"	"	15300	43300	0.55	1580	1.6
0.48	**1890**	**3.0**	2849	**BF70G20-../D06LA4**	212	16100	47700	0.6	1410	4.0
0.4	**2350**	**2.4**	3417	"	"	16100	47700	0.48	1890	3.0
0.34	**2850**	**2.0**	4090	"	"	16100	47700	0.4	2350	2.4
0.3	**3300**	**1.75**	4542	"	"	16100	47700	0.36	2650	2.2
0.27	**3750**	**1.5**	5124	"	"	16100	47700	0.32	3050	1.85
0.24	**4250**	**1.35**	5691	"	"	16100	47700	0.29	3450	1.65
0.21	**4950**	**1.15**	6530	"	"	16100	47700	0.25	4050	1.4
0.19	**5500**	**1.05**	7248	"	"	16100	47700	0.23	4450	1.3

P = 0.18 kW

50 Hz			i	Type	m	F_{RN}	F_{RV}	60 Hz		
n_2	M_2	f_B						n_2	M_2	f_B
1/min	Nm				kg	N	N	1/min	Nm	
177	**9.7**	**7.0**	7.66	**BF06-../D05LA4**	10	1800	-	215	7.9	8.6
147	**11.6**	**6.0**	9.21	"	"	1900	-	176	9.7	7.2
112	**15.3**	**4.9**	12.07	"	"	2000	-	135	12.7	5.9
96	**17.9**	**4.7**	14.21	"	"	2100	-	115	14.9	5.7
80	**21**	**4.5**	16.99	"	"	2500	-	96	17.9	5.3
67	**25.5**	**3.7**	20.42	"	"	2700	-	80	21	4.5
51	**33.5**	**2.8**	26.76	"	"	3000	-	61	28	3.4
43	**39.5**	**2.4**	31.50	"	"	3200	-	52	33	2.9
36	**47.5**	**2.0**	37.69	"	"	3500	-	43	39.5	2.4
29.5	**58**	**1.65**	46.14	"	"	3800	-	35.5	48	2.0
23.5	**73**	**1.3**	58.33	"	"	4000	-	28	61	1.55
20.5	**83**	**1.15**	66.82	"	"	4000	-	24.5	70	1.35
16.5	**104**	**0.91**	83.61	"	"	4000	-	19.5	88	1.1
14.5	**118**	**0.81**	95.16	"	"	4000	-	17.5	98	0.97
22	**78**	**3.1**	61.55	**BF10-../D06LA4**	23	4700	-	26.5	64	3.8
20	**85**	**2.8**	67.69	"	"	4900	-	24	71	3.4
17.5	**98**	**2.4**	77.55	"	"	5100	-	21	81	3.0
16	**107**	**2.2**	85.27	"	"	5300	-	19	90	2.7
15	**114**	**2.1**	90.91	"	"	5400	-	18	95	2.5
14	**122**	**1.95**	99.97	"	"	5600	-	16.5	104	2.3
12.5	**137**	**1.75**	112.3	"	"	5900	-	14.5	118	2.0
11	**156**	**1.55**	123.5	"	"	6100	-	13.5	127	1.9
10.5	**163**	**1.45**	128.9	"	"	6200	-	13	132	1.8
9.6	**179**	**1.35**	141.8	"	"	6400	-	11.5	149	1.6
9.0	**191**	**1.25**	151.2	**BF10Z-../D06LA4**	24	6400	-	11	156	1.55
8.2	**205**	**1.15**	166.2	"	"	6400	-	9.8	175	1.35
7.5	**225**	**1.05**	180.1	"	"	6400	-	9.0	191	1.25
6.9	**245**	**0.98**	198.0	"	"	6400	-	8.2	205	1.15
6.3	**270**	**0.89**	214.5	"	"	6400	-	7.6	225	1.05
5.8	**295**	**0.81**	235.8	"	"	6400	-	6.9	245	0.98
13.5	**127**	**3.3**	100.2	**BF20-../D06LA4**	30	7000	-	16.5	104	4.0
12.5	**137**	**3.1**	110.2	"	"	7300	-	15	114	3.7
11	**156**	**2.7**	123.5	"	"	7600	-	13.5	127	3.3
10	**171**	**2.5**	135.9	"	"	7900	-	12	143	2.9
9.6	**179**	**2.3**	141.2	**BF20Z-../D06LA4**	31	7900	-	11.5	149	2.8
8.7	**197**	**2.1**	155.4	"	"	7900	-	10.5	163	2.6

P = 0.18 kW

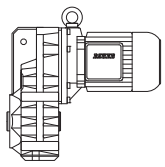

50 Hz			i	Type	m	F_{RN}	F_{RV}	60 Hz		
n_2	M_2	f_B						n_2	M_2	f_B
1/min	Nm				kg	N	N	1/min	Nm	
8.3	**205**	**2.0**	164.3	**BF20Z-../D06LA4**	"	7900	-	9.9	173	2.4
7.5	**225**	**1.85**	180.8	"	"	7900	-	9.0	191	2.2
6.9	**245**	**1.7**	197.1	"	"	7900	-	8.3	205	2.0
6.3	**270**	**1.55**	216.9	"	"	7900	-	7.5	225	1.85
5.8	**295**	**1.4**	235.9	"	"	7900	-	6.9	245	1.7
5.3	**320**	**1.3**	259.6	"	"	7900	-	6.3	270	1.55
4.6	**370**	**1.15**	295.5	"	"	7900	-	5.5	310	1.35
4.2	**405**	**1.05**	325.2	"	"	7900	-	5.0	340	1.25
4.0	**425**	**0.99**	339.1	"	"	7900	-	4.8	355	1.2
3.7	**460**	**0.91**	373.1	"	"	7900	-	4.4	390	1.1
3.3	**520**	**0.81**	418.1	"	"	7900	-	3.9	440	0.95
9.9	**173**	**3.3**	137.1	**BF30-../D06LA4**	40	7400	-	12	143	4.0
9.0	**191**	**3.0**	150.7	**BF30Z-../D06LA4**	42	7400	-	11	156	3.7
8.2	**205**	**2.8**	165.8	"	"	7400	-	9.8	175	3.3
7.7	**220**	**2.6**	176.6	"	"	7400	-	9.2	186	3.1
7.0	**245**	**2.3**	194.3	"	"	7400	-	8.4	200	2.9
6.1	**280**	**2.1**	224.8	"	"	7400	-	7.3	235	2.4
5.5	**310**	**1.85**	247.3	"	"	7400	-	6.6	260	2.2
5.2	**330**	**1.75**	263.5	"	"	7400	-	6.2	275	2.1
4.7	**365**	**1.6**	289.8	"	"	7400	-	5.6	305	1.9
4.4	**390**	**1.45**	310.7	"	"	7400	-	5.3	320	1.8
4.0	**425**	**1.35**	341.8	"	"	7400	-	4.8	355	1.6
3.6	**475**	**1.2**	375.1	"	"	7400	-	4.4	390	1.45
3.3	**520**	**1.1**	412.6	"	"	7400	-	4.0	425	1.35
3.0	**570**	**1.0**	463.3	"	"	7400	-	3.5	490	1.15
2.6	**660**	**0.87**	537.0	"	"	7400	-	3.1	550	1.05
2.2	**720**	**0.88**	622.4	**BF30G06-../D06LA4**	45	7400	-	2.7	570	1.1
6.1	**280**	**3.2**	222.4	**BF40Z-../D06LA4**	53	10600	-	7.3	235	3.8
5.4	**315**	**2.9**	253.2	"	"	10600	-	6.4	265	3.4
4.9	**350**	**2.6**	278.5	"	"	10600	-	5.9	290	3.1
4.6	**370**	**2.4**	295.1	"	"	10600	-	5.5	310	2.9
4.2	**405**	**2.2**	324.7	"	"	10600	-	5.0	340	2.6
3.9	**440**	**2.0**	346.8	"	"	10600	-	4.7	365	2.5
3.6	**475**	**1.9**	381.5	"	"	10600	-	4.3	395	2.3
3.3	**520**	**1.75**	417.3	"	"	10600	-	3.9	440	2.0
3.0	**570**	**1.6**	459.1	"	"	10600	-	3.6	475	1.9
2.7	**630**	**1.45**	514.6	"	"	10600	-	3.2	530	1.7
2.4	**710**	**1.25**	566.1	"	"	10600	-	2.9	590	1.55
2.3	**560**	**1.8**	597.3	**BF40G10-../D06LA4**	58	10600	-	2.8	425	2.4
1.9	**690**	**1.45**	731.6	"	"	10600	-	2.3	540	1.85
1.5	**920**	**1.1**	928.9	"	"	10600	-	1.8	730	1.35
1.3	**1080**	**0.93**	1106	"	"	10600	-	1.5	900	1.1
4.3	**395**	**3.3**	316.6	**BF50Z-../D06LA4**	82	13600	-	5.2	330	3.9
3.9	**440**	**3.0**	354.0	"	"	13600	-	4.6	370	3.5
3.5	**490**	**2.7**	392.8	"	"	13600	-	4.2	405	3.2
3.1	**550**	**2.4**	439.3	"	"	13600	-	3.7	460	2.8
2.8	**610**	**2.1**	496.4	"	"	13600	-	3.3	520	2.5
2.5	**680**	**1.9**	555.2	"	"	13600	-	3.0	570	2.3
2.0	**660**	**2.1**	680.9	**BF50G10-../D06LA4**	86	13600	-	2.4	520	2.7
1.6	**860**	**1.65**	864.5	"	"	13600	-	1.9	690	2.0
1.4	**1000**	**1.4**	1029	"	"	13600	-	1.6	840	1.65
1.2	**1220**	**1.15**	1203	"	"	13600	-	1.4	1010	1.4
1.0	**1470**	**0.95**	1359	"	"	13600	-	1.2	1190	1.2
1.5	**870**	**2.9**	937.6	**BF60G20-../D06LA4**	134	15300	43300	1.8	670	3.7
1.2	**1120**	**2.2**	1211	"	"	15300	43300	1.4	920	2.7
0.95	**1430**	**1.75**	1494	"	"	15300	43300	1.1	1180	2.1
0.85	**1600**	**1.55**	1658	"	"	15300	43300	1.0	1290	1.95

P = 0.18 kW

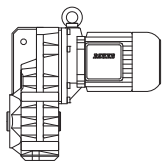

50 Hz			i	Type	m	F_{RN}	F_{RV}	60 Hz		
n_2	M_2	f_B						n_2	M_2	f_B
1/min	Nm				kg	N	N	1/min	Nm	
0.7	**2000**	**1.25**	1955	**BF60G20-../D06LA4**	"	15300	43300	0.85	1570	1.6
0.65	**2150**	**1.15**	2172	"	"	15300	43300	0.75	1830	1.35
0.75	**1850**	**3.1**	1912	**BF70G20-../D06LA4**	212	16100	47700	0.85	1580	3.6
0.6	**2350**	**2.4**	2448	"	"	16100	47700	0.7	1970	2.9
0.48	**3050**	**1.85**	2849	"	"	16100	47700	0.6	2350	2.4
0.4	**3800**	**1.5**	3417	"	"	16100	47700	0.48	3050	1.85
0.34	**4550**	**1.25**	4090	"	"	16100	47700	0.4	3800	1.5
0.3	**5200**	**1.1**	4542	"	"	16100	47700	0.36	4250	1.35

P = 0.25kW

50 Hz			i	Type	m	F_{RN}	F_{RV}	60 Hz		
n_2	M_2	f_B						n_2	M_2	f_B
1/min	Nm				kg	N	N	1/min	Nm	
177	**13.4**	**5.1**	7.66	**BF06-../D05LA4**	10	1800	-	215	11.1	6.1
147	**16.2**	**4.3**	9.21	"	"	1900	-	176	13.5	5.2
112	**21**	**3.6**	12.07	"	"	2000	-	135	17.6	4.3
96	**24.5**	**3.5**	14.21	"	"	2100	-	115	20.5	4.1
80	**29.5**	**3.2**	16.99	"	"	2500	-	96	24.5	3.9
67	**35.5**	**2.7**	20.42	"	"	2700	-	80	29.5	3.2
51	**46.5**	**2.0**	26.76	"	"	3000	-	61	39	2.4
43	**55**	**1.75**	31.50	"	"	3200	-	52	45.5	2.1
36	**66**	**1.45**	37.69	"	"	3500	-	43	55	1.75
29.5	**80**	**1.2**	46.14	"	"	3800	-	35.5	67	1.4
23.5	**101**	**0.94**	58.33	"	"	4000	-	28	85	1.1
20.5	**116**	**0.82**	66.82	"	"	4000	-	24.5	97	0.98
31.5	**75**	**3.2**	43.06	**BF10-../D06LA4**	23	4100	-	38	62	3.9
29	**82**	**2.9**	47.35	"	"	4250	-	34.5	69	3.5
26.5	**90**	**2.7**	51.28	"	"	4400	-	32	74	3.2
24	**99**	**2.4**	56.39	"	"	4550	-	29	82	2.9
22	**108**	**2.2**	61.55	"	"	4700	-	26.5	90	2.7
20	**119**	**2.0**	67.69	"	"	4900	-	24	99	2.4
17.5	**136**	**1.75**	77.55	"	"	5100	-	21	113	2.1
16	**149**	**1.6**	85.27	"	"	5300	-	19	125	1.9
15	**159**	**1.5**	90.91	"	"	5400	-	18	132	1.8
14	**170**	**1.4**	99.97	"	"	5600	-	16.5	144	1.65
12.5	**191**	**1.25**	112.3	"	"	5900	-	14.5	164	1.45
11	**215**	**1.1**	123.5	"	"	6100	-	13.5	176	1.35
10.5	**225**	**1.05**	128.9	"	"	6200	-	13	183	1.3
9.6	**245**	**0.98**	141.8	"	"	6400	-	11.5	205	1.15
9.0	**265**	**0.91**	151.2	**BF10Z-../D06LA4**	24	6400	-	11	215	1.1
8.2	**290**	**0.83**	166.2	"	"	6400	-	9.8	240	1.0
18	**132**	**3.2**	76.69	**BF20-../D06LA4**	30	6300	-	21.5	111	3.8
15.5	**154**	**2.7**	87.31	"	"	6600	-	19	125	3.4
14.5	**164**	**2.6**	96.08	"	"	6900	-	17	140	3.0
13.5	**176**	**2.4**	100.2	"	"	7000	-	16.5	144	2.9
12.5	**191**	**2.2**	110.2	"	"	7300	-	15	159	2.6
11	**215**	**1.95**	123.5	"	"	7600	-	13.5	176	2.4
10	**235**	**1.8**	135.9	"	"	7900	-	12	198	2.1
9.6	**245**	**1.7**	141.2	**BF20Z-../D06LA4**	31	7900	-	11.5	205	2.0
8.7	**270**	**1.55**	155.4	"	"	7900	-	10.5	225	1.85
8.3	**285**	**1.45**	164.3	"	"	7900	-	9.9	240	1.75
7.5	**315**	**1.35**	180.8	"	"	7900	-	9.0	265	1.6
6.9	**345**	**1.2**	197.1	"	"	7900	-	8.3	285	1.45
6.3	**375**	**1.1**	216.9	"	"	7900	-	7.5	315	1.35
5.8	**410**	**1.0**	235.9	"	"	7900	-	6.9	345	1.2
5.3	**450**	**0.93**	259.6	"	"	7900	-	6.3	375	1.1
4.6	**510**	**0.82**	295.5	"	"	7900	-	5.5	430	0.98

P = 0.25 kW

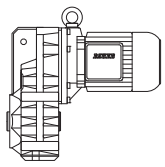

50 Hz			i	Type	m	F_{RN}	F_{RV}	60 Hz		
n_2	M_2	f_B						n_2	M_2	f_B
1/min	Nm				kg	N	N	1/min	m	
13	**183**	**3.1**	107.6	**BF30-../D06LA4**	40	6700	-	15.5	154	3.7
11.5	**205**	**2.8**	118.3	"	"	7000	-	14	170	3.4
11	**215**	**2.7**	124.7	"	"	7100	-	13	183	3.1
9.9	**240**	**2.4**	137.1	"	"	7400	-	12	198	2.9
9.0	**265**	**2.2**	150.7	**BF30Z-../D06LA4**	42	7400	-	11	215	2.7
8.2	**290**	**2.0**	165.8	"	"	7400	-	9.8	240	2.4
7.7	**310**	**1.85**	176.6	"	"	7400	-	9.2	255	2.3
7.0	**340**	**1.7**	194.3	"	"	7400	-	8.4	280	2.1
6.1	**390**	**1.45**	224.8	"	"	7400	-	7.3	325	1.75
5.5	**430**	**1.35**	247.3	"	"	7400	-	6.6	360	1.6
5.2	**455**	**1.25**	263.5	"	"	7400	-	6.2	385	1.5
4.7	**500**	**1.15**	289.8	"	"	7400	-	5.6	425	1.35
4.4	**540**	**1.05**	310.7	"	"	7400	-	5.3	450	1.3
4.0	**590**	**0.97**	341.8	"	"	7400	-	4.8	495	1.15
3.6	**660**	**0.87**	375.1	"	"	7400	-	4.4	540	1.05
3.3	**720**	**0.8**	412.6	"	"	7400	-	4.0	590	0.97
8.7	**270**	**3.3**	155.6	**BF40Z-../D06LA4**	53	10600	-	10.5	225	4.0
7.9	**300**	**3.0**	171.2	"	"	10600	-	9.5	250	3.6
7.2	**330**	**2.7**	188.3	"	"	10600	-	8.7	270	3.3
6.7	**355**	**2.5**	202.2	"	"	10600	-	8.1	290	3.1
6.1	**390**	**2.3**	222.4	"	"	10600	-	7.3	325	2.8
5.4	**440**	**2.0**	253.2	"	"	10600	-	6.4	370	2.4
4.9	**485**	**1.85**	278.5	"	"	10600	-	5.9	400	2.3
4.6	**510**	**1.75**	295.1	"	"	10600	-	5.5	430	2.1
4.2	**560**	**1.6**	324.7	"	"	10600	-	5.0	475	1.9
3.9	**610**	**1.5**	346.8	"	"	10600	-	4.7	500	1.8
3.6	**660**	**1.35**	381.5	"	"	10600	-	4.3	550	1.65
3.3	**720**	**1.25**	417.3	"	"	10600	-	3.9	610	1.5
3.0	**790**	**1.15**	459.1	"	"	10600	-	3.6	660	1.35
2.7	**880**	**1.0**	514.6	"	"	10600	-	3.2	740	1.2
2.4	**990**	**0.91**	566.1	"	"	10600	-	2.9	820	1.1
2.3	**850**	**1.2**	597.3	**BF40G10-../D06LA4**	58	10600	-	2.8	660	1.5
1.9	**1050**	**0.95**	731.6	"	"	10600	-	2.3	830	1.2
5.5	**430**	**3.0**	247.5	**BF50Z-../D06LA4**	82	13600	-	6.6	360	3.6
4.9	**485**	**2.7**	276.8	"	"	13600	-	5.9	400	3.3
4.3	**550**	**2.4**	316.6	"	"	13600	-	5.2	455	2.9
3.9	**610**	**2.1**	354.0	"	"	13600	-	4.6	510	2.5
3.5	**680**	**1.9**	392.8	"	"	13600	-	4.2	560	2.3
3.1	**770**	**1.7**	439.3	"	"	13600	-	3.7	640	2.0
2.8	**850**	**1.55**	496.4	"	"	13600	-	3.3	720	1.8
2.5	**950**	**1.35**	555.2	"	"	13600	-	3.0	790	1.65
2.0	**1000**	**1.4**	680.9	**BF50G10-../D06LA4**	86	13600	-	2.4	800	1.75
1.6	**1280**	**1.1**	864.5	"	"	13600	-	1.9	1050	1.35
1.4	**1480**	**0.95**	1029	"	"	13600	-	1.6	1260	1.1
2.4	**750**	**3.3**	569.3	**BF60G20-../D06LA4**	134	15300	43300	2.9	580	4.3
2.0	**900**	**2.8**	689.0	"	"	15300	43300	2.4	700	3.6
1.7	**1090**	**2.3**	813.2	"	"	15300	43300	2.0	880	2.8
1.5	**1310**	**1.9**	937.6	"	"	15300	43300	1.8	1050	2.4
1.2	**1680**	**1.5**	1211	"	"	15300	43300	1.4	1390	1.8
0.95	**2100**	**1.2**	1494	"	"	15300	43300	1.1	1790	1.4
0.85	**2350**	**1.05**	1658	"	"	15300	43300	1.0	1960	1.3
1.0	**2000**	**2.9**	1390	**BF70G20-../D06LA4**	212	16100	47700	1.2	1630	3.5
0.85	**2350**	**2.4**	1621	"	"	16100	47700	1.0	1970	2.9
0.75	**2700**	**2.1**	1912	"	"	16100	47700	0.85	2350	2.4
0.6	**3500**	**1.65**	2448	"	"	16100	47700	0.7	2900	1.95
0.48	**4450**	**1.3**	2849	"	"	16100	47700	0.6	3450	1.65
0.4	**5400**	**1.05**	3417	"	"	16100	47700	0.48	4450	1.3

BF-series paralle shaft geared motors

Selection - parallel shaft geared motors DSE -IE1

P = 0.3 kW

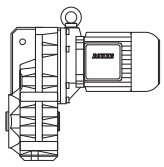

50 Hz			i	Type	m	F_{RN}	F_{RV}	60 Hz		
n_2	M_2	f_B						n_2	M_2	f_B
1/min	Nm				kg	N	N	1/min	Nm	
177	**16.1**	**4.2**	7.66	**BF06-../D07LA4**	14	1800	-	215	13.3	5.1
147	**19.4**	**3.6**	9.21	"	"	1900	-	176	16.2	4.3
112	**25.5**	**2.9**	12.07	"	"	2000	-	135	21	3.6
96	**29.5**	**2.9**	14.21	"	"	2100	-	115	24.5	3.5
80	**35.5**	**2.7**	16.99	"	"	2500	-	96	29.5	3.2
67	**42.5**	**2.2**	20.42	"	"	2700	-	80	35.5	2.7
51	**56**	**1.7**	26.76	"	"	3000	-	61	46.5	2.0
43	**66**	**1.45**	31.50	"	"	3200	-	52	55	1.75
36	**79**	**1.2**	37.69	"	"	3500	-	43	66	1.45
29.5	**97**	**0.98**	46.14	"	"	3800	-	35.5	80	1.2
37.5	**76**	**3.2**	36.15	**BF10-../D07LA4**	26	3800	-	45	63	3.8
34	**84**	**2.9**	39.75	"	"	3950	-	41	69	3.5
31.5	**90**	**2.7**	43.06	"	"	4100	-	38	75	3.2
29	**98**	**2.4**	47.35	"	"	4250	-	34.5	83	2.9
26.5	**108**	**2.2**	51.28	"	"	4400	-	32	89	2.7
24	**119**	**2.0**	56.39	"	"	4550	-	29	98	2.4
22	**130**	**1.85**	61.55	"	"	4700	-	26.5	108	2.2
20	**143**	**1.7**	67.69	"	"	4900	-	24	119	2.0
17.5	**163**	**1.45**	77.55	"	"	5100	-	21	136	1.75
16	**179**	**1.35**	85.27	"	"	5300	-	19	150	1.6
15	**191**	**1.25**	90.91	"	"	5400	-	18	159	1.5
14	**200**	**1.2**	99.97	"	"	5600	-	16.5	173	1.4
12.5	**225**	**1.05**	112.3	"	"	5900	-	14.5	197	1.2
11	**260**	**0.92**	123.5	"	"	6100	-	13.5	210	1.15
10.5	**270**	**0.89**	128.9	"	"	6200	-	13	220	1.1
9.6	**295**	**0.81**	141.8	"	"	6400	-	11.5	245	0.98
21.5	**133**	**3.2**	64.08	**BF20-../D07LA4**	32	5900	-	25.5	112	3.8
19.5	**146**	**2.9**	69.70	"	"	6100	-	23.5	121	3.5
18	**159**	**2.6**	76.69	"	"	6300	-	21.5	133	3.2
15.5	**184**	**2.3**	87.31	"	"	6600	-	19	150	2.8
14.5	**197**	**2.1**	96.08	"	"	6900	-	17	168	2.5
13.5	**210**	**2.0**	100.2	"	"	7000	-	16.5	173	2.4
12.5	**225**	**1.85**	110.2	"	"	7300	-	15	191	2.2
11	**260**	**1.6**	123.5	"	"	7600	-	13.5	210	2.0
10	**285**	**1.45**	135.9	"	"	7900	-	12	235	1.8
9.6	**295**	**1.4**	141.2	**BF20Z-../D07LA4**	34	7900	-	11.5	245	1.7
8.7	**325**	**1.3**	155.4	"	"	7900	-	10.5	270	1.55
8.3	**345**	**1.2**	164.3	"	"	7900	-	9.9	285	1.45
7.5	**380**	**1.1**	180.8	"	"	7900	-	9.0	315	1.35
6.9	**415**	**1.0**	197.1	"	"	7900	-	8.3	345	1.2
6.3	**450**	**0.93**	216.9	"	"	7900	-	7.5	380	1.1
5.8	**490**	**0.86**	235.9	"	"	7900	-	6.9	415	1.0
16	**179**	**3.2**	87.08	**BF30-../D07LA4**	42	6200	-	19	150	3.8
14.5	**197**	**2.9**	95.79	"	"	6400	-	17	168	3.4
13	**220**	**2.6**	107.6	"	"	6700	-	15.5	184	3.1
11.5	**245**	**2.3**	118.3	"	"	7000	-	14	200	2.9
11	**260**	**2.2**	124.7	"	"	7100	-	13	220	2.6
9.9	**285**	**2.0**	137.1	"	"	7400	-	12	235	2.4
9.0	**315**	**1.85**	150.7	**BF30Z-../D07LA4**	45	7400	-	11	260	2.2
8.2	**345**	**1.65**	165.8	"	"	7400	-	9.8	290	2.0
7.7	**370**	**1.55**	176.6	"	"	7400	-	9.2	310	1.85
7.0	**405**	**1.4**	194.3	"	"	7400	-	8.4	340	1.7
6.1	**465**	**1.25**	224.8	"	"	7400	-	7.3	390	1.45
5.5	**520**	**1.1**	247.3	"	"	7400	-	6.6	430	1.35
5.2	**550**	**1.05**	263.5	"	"	7400	-	6.2	460	1.25
4.7	**600**	**0.96**	289.8	"	"	7400	-	5.6	510	1.15
4.4	**650**	**0.88**	310.7	"	"	7400	-	5.3	540	1.05
4.0	**710**	**0.81**	341.8	"	"	7400	-	4.8	590	0.97

P = 0.3 kW

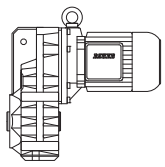

50 Hz			i	Type	m	F_{RN}	F_{RV}	60 Hz		
n_2	M_2	f_B						n_2	M_2	f_B
1/min	Nm				kg	N	N	1/min	Nm	
9.6	**295**	**3.1**	141.4	**BF40Z-../D07LA4**	55	10600	-	11.5	245	3.7
8.7	**325**	**2.8**	155.6	"	"	10600	-	10.5	270	3.3
7.9	**360**	**2.5**	171.2	"	"	10600	-	9.5	300	3.0
7.2	**395**	**2.3**	188.3	"	"	10600	-	8.7	325	2.8
6.7	**425**	**2.1**	202.2	"	"	10600	-	8.1	350	2.6
6.1	**465**	**1.95**	222.4	"	"	10600	-	7.3	390	2.3
5.4	**530**	**1.7**	253.2	"	"	10600	-	6.4	445	2.0
4.9	**580**	**1.55**	278.5	"	"	10600	-	5.9	485	1.85
4.6	**620**	**1.45**	295.1	"	"	10600	-	5.5	520	1.75
4.2	**680**	**1.3**	324.7	"	"	10600	-	5.0	570	1.6
3.9	**730**	**1.25**	346.8	"	"	10600	-	4.7	600	1.5
3.6	**790**	**1.15**	381.5	"	"	10600	-	4.3	660	1.35
3.3	**860**	**1.05**	417.3	"	"	10600	-	3.9	730	1.25
3.0	**950**	**0.95**	459.1	"	"	10600	-	3.6	790	1.15
2.7	**1060**	**0.85**	514.6	"	"	10600	-	3.2	890	1.0
2.3	**1050**	**0.95**	597.3	**BF40G10-../D07LA4**	61	10600	-	2.8	830	1.2
6.6	**430**	**3.0**	205.2	**BF50Z-../D07LA4**	85	13600	-	7.9	360	3.6
5.5	**520**	**2.5**	247.5	"	"	13600	-	6.6	430	3.0
4.9	**580**	**2.2**	276.8	"	"	13600	-	5.9	485	2.7
4.3	**660**	**1.95**	316.6	"	"	13600	-	5.2	550	2.4
3.9	**730**	**1.8**	354.0	"	"	13600	-	4.6	620	2.1
3.5	**810**	**1.6**	392.8	"	"	13600	-	4.2	680	1.9
3.1	**920**	**1.4**	439.3	"	"	13600	-	3.7	770	1.7
2.8	**1020**	**1.25**	496.4	"	"	13600	-	3.3	860	1.5
2.5	**1140**	**1.15**	555.2	"	"	13600	-	3.0	950	1.35
2.0	**1240**	**1.15**	680.9	**BF50G10-../D07LA4**	89	13600	-	2.4	1000	1.4
1.6	**1580**	**0.89**	864.5	"	"	13600	-	1.9	1300	1.1
2.4	**950**	**2.6**	569.3	**BF60G20-../D07LA4**	136	15300	43300	2.9	740	3.4
2.0	**1140**	**2.2**	689.0	"	"	15300	43300	2.4	900	2.8
1.7	**1370**	**1.8**	813.2	"	"	15300	43300	2.0	1120	2.2
1.5	**1630**	**1.55**	937.6	"	"	15300	43300	1.8	1310	1.9
1.2	**2050**	**1.2**	1211	"	"	15300	43300	1.4	1740	1.45
1.4	**1740**	**3.3**	1017	**BF70G20-../D07LA4**	215	16100	47700	1.6	1490	3.8
1.0	**2500**	**2.3**	1390	"	"	16100	47700	1.2	2000	2.9
0.85	**2950**	**1.95**	1621	"	"	16100	47700	1.0	2450	2.3
0.75	**3350**	**1.7**	1912	"	"	16100	47700	0.85	2900	1.95
0.6	**4250**	**1.35**	2448	"	"	16100	47700	0.7	3600	1.6
0.48	**5400**	**1.05**	2849	"	"	16100	47700	0.6	4250	1.35

P = 0.37 kW

50 Hz			i	Type	m	F_{RN}	F_{RV}	60 Hz		
n_2	M_2	f_B						n_2	M_2	f_B
1/min	Nm				kg	N	N	1/min	Nm	
177	**19.9**	**3.4**	7.66	**BF06-../D07LA4**	14	1800	-	215	16.4	4.1
147	**24**	**2.9**	9.21	"	"	1900	-	176	20	3.5
112	**31.5**	**2.4**	12.07	"	"	2000	-	135	26	2.9
96	**36.5**	**2.3**	14.21	"	"	2100	-	115	30.5	2.8
80	**44**	**2.2**	16.99	"	"	2500	-	96	36.5	2.6
67	**52**	**1.85**	20.42	"	"	2700	-	80	44	2.2
51	**69**	**1.4**	26.76	"	"	3000	-	61	57	1.65
43	**82**	**1.15**	31.50	"	"	3200	-	52	67	1.4
36	**98**	**0.97**	37.69	"	"	3500	-	43	82	1.15
29.5	**119**	**0.8**	46.14	"	"	3800	-	35.5	99	0.96
47.5	**74**	**3.2**	28.47	**BF10-../D07LA4**	26	3450	-	57	61	3.9
43.5	**81**	**3.0**	31.31	"	"	3600	-	52	67	3.6
37.5	**94**	**2.6**	36.15	"	"	3800	-	45	78	3.1
34	**103**	**2.3**	39.75	"	"	3950	-	41	86	2.8

P = 0.37 kW

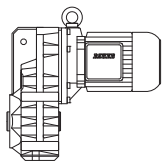

50 Hz			i	Type	m	F_{RN}	F_{RV}	60 Hz		
n_2	M_2	f_B						n_2	M_2	f_B
1/min	Nm				kg	N	N	1/min	Nm	
31.5	**112**	**2.1**	43.06	**BF10-../D07LA4**	"	4100	-	38	92	2.6
29	**121**	**2.0**	47.35	"	"	4250	-	34.5	102	2.4
26.5	**133**	**1.8**	51.28	"	"	4400	-	32	110	2.2
24	**147**	**1.65**	56.39	"	"	4550	-	29	121	2.0
22	**160**	**1.5**	61.55	"	"	4700	-	26.5	133	1.8
20	**176**	**1.35**	67.69	"	"	4900	-	24	147	1.65
17.5	**200**	**1.2**	77.55	"	"	5100	-	21	168	1.45
16	**220**	**1.1**	85.27	"	"	5300	-	19	185	1.3
15	**235**	**1.0**	90.91	"	"	5400	-	18	196	1.2
14	**250**	**0.96**	99.97	"	"	5600	-	16.5	210	1.15
12.5	**280**	**0.86**	112.3	"	"	5900	-	14.5	240	1.0
28	**126**	**3.3**	48.56	**BF20-../D07LA4**	32	5200	-	33.5	105	4.0
25.5	**138**	**3.0**	53.43	"	"	5500	-	30.5	115	3.7
23.5	**150**	**2.8**	58.24	"	"	5600	-	28	126	3.3
21.5	**164**	**2.6**	64.08	"	"	5900	-	25.5	138	3.0
19.5	**181**	**2.3**	69.70	"	"	6100	-	23.5	150	2.8
18	**196**	**2.1**	76.69	"	"	6300	-	21.5	164	2.6
15.5	**225**	**1.85**	87.31	"	"	6600	-	19	185	2.3
14.5	**240**	**1.75**	96.08	"	"	6900	-	17	205	2.0
13.5	**260**	**1.6**	100.2	"	"	7000	-	16.5	210	2.0
12.5	**280**	**1.5**	110.2	"	"	7300	-	15	235	1.8
11	**320**	**1.3**	123.5	"	"	7600	-	13.5	260	1.6
10	**350**	**1.2**	135.9	"	"	7900	-	12	290	1.45
9.6	**365**	**1.15**	141.2	**BF20Z-../D07LA4**	34	7900	-	11.5	305	1.4
8.7	**405**	**1.05**	155.4	"	"	7900	-	10.5	335	1.25
8.3	**425**	**0.99**	164.3	"	"	7900	-	9.9	355	1.2
7.5	**470**	**0.89**	180.8	"	"	7900	-	9.0	390	1.1
6.9	**510**	**0.82**	197.1	"	"	7900	-	8.3	425	0.99
20.5	**172**	**3.3**	67.28	**BF30-../D07LA4**	42	5500	-	24.5	144	4.0
19	**185**	**3.1**	72.13	"	"	5700	-	22.5	157	3.7
17.5	**200**	**2.9**	79.34	"	"	5900	-	20.5	172	3.3
16	**220**	**2.6**	87.08	"	"	6200	-	19	185	3.1
14.5	**240**	**2.4**	95.79	"	"	6400	-	17	205	2.8
13	**270**	**2.1**	107.6	"	"	6700	-	15.5	225	2.6
11.5	**305**	**1.9**	118.3	"	"	7000	-	14	250	2.3
11	**320**	**1.8**	124.7	"	"	7100	-	13	270	2.1
9.9	**355**	**1.6**	137.1	"	"	7400	-	12	290	2.0
9.0	**390**	**1.45**	150.7	**BF30Z-../D07LA4**	45	7400	-	11	320	1.8
8.2	**430**	**1.35**	165.8	"	"	7400	-	9.8	360	1.6
7.7	**455**	**1.25**	176.6	"	"	7400	-	9.2	380	1.5
7.0	**500**	**1.15**	194.3	"	"	7400	-	8.4	420	1.35
6.1	**570**	**1.0**	224.8	"	"	7400	-	7.3	480	1.2
5.5	**640**	**0.9**	247.3	"	"	7400	-	6.6	530	1.1
5.2	**670**	**0.86**	263.5	"	"	7400	-	6.2	560	1.05
9.6	**365**	**2.5**	141.4	**BF40Z-../D07LA4**	55	10600	-	11.5	305	3.0
8.7	**405**	**2.2**	155.6	"	"	10600	-	10.5	335	2.7
7.9	**445**	**2.0**	171.2	"	"	10600	-	9.5	370	2.4
7.2	**490**	**1.85**	188.3	"	"	10600	-	8.7	405	2.2
6.7	**520**	**1.75**	202.2	"	"	10600	-	8.1	435	2.1
6.1	**570**	**1.6**	222.4	"	"	10600	-	7.3	480	1.9
5.4	**650**	**1.4**	253.2	"	"	10600	-	6.4	550	1.65
4.9	**720**	**1.25**	278.5	"	"	10600	-	5.9	590	1.55
4.6	**760**	**1.2**	295.1	"	"	10600	-	5.5	640	1.4
4.2	**840**	**1.05**	324.7	"	"	10600	-	5.0	700	1.3
3.9	**900**	**1.0**	346.8	"	"	10600	-	4.7	750	1.2
3.6	**980**	**0.92**	381.5	"	"	10600	-	4.3	820	1.1
3.3	**1070**	**0.84**	417.3	"	"	10600	-	3.9	900	1.0

P = 0.37 kW

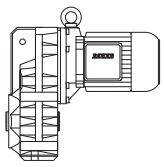

50 Hz			i	Type	m	F_{RN}	F_{RV}	60 Hz		
n_2	M_2	f_B						n_2	M_2	f_B
1/min	Nm				kg	N	N	1/min	Nm	
8.8	**400**	**3.3**	154.5	**BF50Z-../D07LA4**	85	13600	-	10.5	335	3.9
7.4	**475**	**2.7**	183.5	"	"	13600	-	8.9	395	3.3
6.6	**530**	**2.5**	205.2	"	"	13600	-	7.9	445	2.9
5.5	**640**	**2.0**	247.5	"	"	13600	-	6.6	530	2.5
4.9	**720**	**1.8**	276.8	"	"	13600	-	5.9	590	2.2
4.3	**820**	**1.6**	316.6	"	"	13600	-	5.2	670	1.95
3.9	**900**	**1.45**	354.0	"	"	13600	-	4.6	760	1.7
3.5	**1000**	**1.3**	392.8	"	"	13600	-	4.2	840	1.55
3.1	**1130**	**1.15**	439.3	"	"	13600	-	3.7	950	1.35
2.8	**1260**	**1.05**	496.4	"	"	13600	-	3.3	1070	1.2
2.5	**1410**	**0.92**	555.2	"	"	13600	-	3.0	1170	1.1
2.0	**1570**	**0.89**	680.9	**BF50G10-../D07LA4**	89	13600	-	2.4	1280	1.1
2.4	**1230**	**2.0**	569.3	**BF60G20-../D07LA4**	136	15300	43300	2.9	970	2.6
2.0	**1470**	**1.7**	689.0	"	"	15300	43300	2.4	1180	2.1
1.7	**1770**	**1.4**	813.2	"	"	15300	43300	2.0	1460	1.7
1.5	**2050**	**1.2**	937.6	"	"	15300	43300	1.8	1680	1.5
1.2	**2600**	**0.96**	1211	"	"	15300	43300	1.4	2200	1.15
1.6	**1950**	**2.9**	872.1	**BF70G20-../D07LA4**	215	16100	47700	1.9	1600	3.6
1.4	**2200**	**2.6**	1017	"	"	16100	47700	1.6	1900	3.0
1.0	**3150**	**1.8**	1390	"	"	16100	47700	1.2	2550	2.2
0.85	**3700**	**1.55**	1621	"	"	16100	47700	1.0	3100	1.85
0.75	**4250**	**1.35**	1912	"	"	16100	47700	0.85	3700	1.55
0.6	**5400**	**1.05**	2448	"	"	16100	47700	0.7	4550	1.25

P = 0.55 kW

50 Hz			i	Type	m	F_{RN}	F_{RV}	60 Hz		
n_2	M_2	f_B						n_2	M_2	f_B
1/min	Nm				kg	N	N	1/min	Nm	
245	**21**	**3.0**	5.72	**BF06-../D08MA4**	16	1630	-	295	17.8	3.5
183	**28.5**	**2.4**	7.66	"	"	1800	-	220	23.5	2.9
153	**34**	**2.1**	9.21	"	"	1900	-	183	28.5	2.5
116	**45**	**1.65**	12.07	"	"	2000	-	140	37.5	2.0
99	**53**	**1.6**	14.21	"	"	2100	-	119	44	1.95
83	**63**	**1.5**	16.99	"	"	2500	-	99	53	1.8
69	**76**	**1.25**	20.42	"	"	2700	-	83	63	1.5
53	**99**	**0.96**	26.76	"	"	3000	-	63	83	1.15
44.5	**118**	**0.81**	31.50	"	"	3200	-	54	97	0.98
94	**55**	**3.3**	15.04	**BF10-../D08MA4**	27	2800	-	112	46.5	3.9
70	**75**	**3.2**	20.05	"	"	3000	-	84	62	3.9
61	**86**	**2.8**	23.28	"	"	3200	-	73	71	3.4
55	**95**	**2.5**	25.60	"	"	3350	-	66	79	3.0
49.5	**106**	**2.3**	28.47	"	"	3450	-	60	87	2.8
45	**116**	**2.1**	31.31	"	"	3600	-	54	97	2.5
39	**134**	**1.8**	36.15	"	"	3800	-	46.5	112	2.1
35.5	**147**	**1.65**	39.75	"	"	3950	-	42.5	123	1.95
33	**159**	**1.5**	43.06	"	"	4100	-	39.5	132	1.8
30	**175**	**1.35**	47.35	"	"	4250	-	35.5	147	1.65
27.5	**191**	**1.25**	51.28	"	"	4400	-	33	159	1.5
25	**210**	**1.15**	56.39	"	"	4550	-	30	175	1.35
23	**225**	**1.05**	61.55	"	"	4700	-	27.5	191	1.25
21	**250**	**0.96**	67.69	"	"	4900	-	25	210	1.15
18.5	**280**	**0.86**	77.55	"	"	5100	-	22	235	1.0
39.5	**132**	**3.2**	35.85	**BF20-../D08MA4**	33	4650	-	47	111	3.8
34	**154**	**2.7**	41.72	"	"	4950	-	40.5	129	3.3
31	**169**	**2.5**	45.90	"	"	5100	-	37	141	3.0
29	**181**	**2.3**	48.56	"	"	5200	-	35	150	2.8

P = 0.55 kW

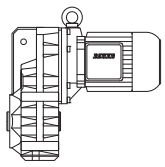

50 Hz			i	Type	m	F_{RN}	F_{RV}	60 Hz		
n_2	M_2	f_B						n_2	M_2	f_B
1/min	Nm				kg	N	N	1/min	Nm	
26.5	**198**	**2.1**	53.43	**BF20-../D08MA4**	"	5500	-	31.5	166	2.5
24.5	**210**	**2.0**	58.24	"	"	5600	-	29	181	2.3
22	**235**	**1.8**	64.08	"	"	5900	-	26.5	198	2.1
20.5	**255**	**1.65**	69.70	"	"	6100	-	24.5	210	2.0
18.5	**280**	**1.5**	76.69	"	"	6300	-	22	235	1.8
16.5	**315**	**1.35**	87.31	"	"	6600	-	19.5	265	1.6
15	**350**	**1.2**	96.08	"	"	6900	-	17.5	300	1.4
14	**375**	**1.1**	100.2	"	"	7000	-	17	305	1.4
13	**400**	**1.05**	110.2	"	"	7300	-	15.5	335	1.25
11.5	**455**	**0.92**	123.5	"	"	7600	-	14	375	1.1
10.5	**500**	**0.84**	135.9	"	"	7900	-	12.5	420	1.0
10	**520**	**0.81**	141.2	**BF20Z-../D08MA4**	35	7900	-	12	435	0.97
27	**194**	**3.0**	52.20	**BF30-../D08MA4**	43	5000	-	32.5	161	3.6
24.5	**210**	**2.7**	57.41	"	"	5200	-	29.5	178	3.2
23	**225**	**2.6**	61.17	"	"	5300	-	27.5	191	3.0
21	**250**	**2.3**	67.28	"	"	5500	-	25	210	2.7
19.5	**265**	**2.2**	72.13	"	"	5700	-	23.5	220	2.6
18	**290**	**2.0**	79.34	"	"	5900	-	21.5	240	2.4
16.5	**315**	**1.85**	87.08	"	"	6200	-	19.5	265	2.2
15	**350**	**1.65**	95.79	"	"	6400	-	18	290	2.0
13.5	**385**	**1.5**	107.6	"	"	6700	-	16	325	1.75
12	**435**	**1.3**	118.3	"	"	7000	-	14.5	360	1.6
11.5	**455**	**1.25**	124.7	"	"	7100	-	13.5	385	1.5
10.5	**500**	**1.15**	137.1	"	"	7400	-	12.5	420	1.35
9.3	**560**	**1.05**	150.7	**BF30Z-../D08MA4**	46	7400	-	11.5	455	1.25
8.5	**610**	**0.94**	165.8	"	"	7400	-	10.5	500	1.15
8.0	**650**	**0.88**	176.6	"	"	7400	-	9.6	540	1.05
7.3	**710**	**0.81**	194.3	"	"	7400	-	8.7	600	0.96
18	**290**	**3.1**	78.55	**BF40-../D08MA4**	53	8500	-	21.5	240	3.8
17	**305**	**3.0**	83.91	"	"	8700	-	20.5	255	3.5
15.5	**335**	**2.7**	92.31	"	"	9100	-	18.5	280	3.2
14	**375**	**2.4**	101.0	"	"	9400	-	17	305	3.0
13	**400**	**2.3**	111.1	"	"	9800	-	15.5	335	2.7
11.5	**455**	**2.0**	124.5	"	"	10200	-	13.5	385	2.3
10.5	**500**	**1.8**	137.0	"	"	10600	-	12.5	420	2.1
10	**520**	**1.75**	141.4	**BF40Z-../D08MA4**	56	10600	-	12	435	2.1
9.0	**580**	**1.55**	155.6	"	"	10600	-	11	475	1.9
8.2	**640**	**1.4**	171.2	"	"	10600	-	9.9	530	1.7
7.5	**700**	**1.3**	188.3	"	"	10600	-	9.0	580	1.55
7.0	**750**	**1.2**	202.2	"	"	10600	-	8.4	620	1.45
6.3	**830**	**1.1**	222.4	"	"	10600	-	7.6	690	1.3
5.6	**930**	**0.97**	253.2	"	"	10600	-	6.7	780	1.15
5.1	**1020**	**0.88**	278.5	"	"	10600	-	6.1	860	1.05
4.8	**1090**	**0.83**	295.1	"	"	10600	-	5.7	920	0.98
12.5	**420**	**3.1**	114.0	**BF50-../D08MA4**	81	12900	-	15	350	3.7
11	**475**	**2.7**	127.5	"	"	13600	-	13.5	385	3.4
10.5	**500**	**2.6**	138.1	**BF50Z-../D08MA4**	86	13600	-	12.5	420	3.1
9.1	**570**	**2.3**	154.5	"	"	13600	-	11	475	2.7
7.7	**680**	**1.9**	183.5	"	"	13600	-	9.2	570	2.3
6.9	**760**	**1.7**	205.2	"	"	13600	-	8.2	640	2.0
5.7	**920**	**1.4**	247.5	"	"	13600	-	6.8	770	1.7
5.1	**1020**	**1.25**	276.8	"	"	13600	-	6.1	860	1.5
4.5	**1160**	**1.1**	316.6	"	"	13600	-	5.4	970	1.35
4.0	**1310**	**0.99**	354.0	"	"	13600	-	4.8	1090	1.2
3.6	**1450**	**0.9**	392.8	"	"	13600	-	4.3	1220	1.05
7.5	**700**	**3.3**	187.7	**BF60Z-../D08MA4**	130	15300	43300	9.0	580	4.0
6.4	**820**	**2.8**	221.4	"	"	15300	43300	7.6	690	3.3
5.8	**900**	**2.6**	245.6	"	"	15300	43300	6.9	760	3.0
4.8	**1090**	**2.1**	293.4	"	"	15300	43300	5.8	900	2.6

P = 0.55 kW

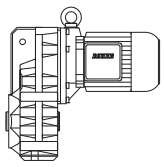

50 Hz			i	Type	m	F_{RN}	F_{RV}	60 Hz		
n_2	M_2	f_B						n_2	M_2	f_B
1/min	Nm				kg	N	N	1/min	Nm	
4.3	**1220**	**1.9**	325.6	**BF60Z-../D08MA4**	"	15300	43300	5.2	1010	2.3
3.7	**1410**	**1.65**	380.0	"	"	15300	43300	4.5	1160	2.0
3.4	**1540**	**1.5**	421.6	"	"	15300	43300	4.0	1310	1.75
3.1	**1690**	**1.35**	459.9	"	"	15300	43300	3.7	1410	1.65
2.8	**1870**	**1.25**	510.3	"	"	15300	43300	3.3	1590	1.45
2.5	**1860**	**1.35**	569.3	**BF60G20-../D08MA4**	137	15300	43300	3.0	1510	1.65
2.1	**2200**	**1.15**	689.0	"	"	15300	43300	2.5	1810	1.4
1.8	**2600**	**0.96**	813.2	"	"	15300	43300	2.1	2150	1.15
3.2	**1640**	**3.2**	439.2	**BF70Z-../D08MA4**	218	16100	47700	3.9	1340	3.9
2.8	**1870**	**2.8**	512.4	"	"	16100	47700	3.3	1590	3.3
2.7	**1720**	**3.3**	524.1	**BF70G20-../D08MA4**	216	16100	47700	3.3	1370	4.2
2.5	**1850**	**3.1**	577.5	"	"	16100	47700	3.0	1500	3.8
2.1	**2200**	**2.6**	673.6	"	"	16100	47700	2.5	1810	3.1
1.7	**2800**	**2.0**	872.1	"	"	16100	47700	2.0	2350	2.4
1.4	**3450**	**1.65**	1017	"	"	16100	47700	1.7	2750	2.1
1.1	**4400**	**1.3**	1390	"	"	16100	47700	1.3	3650	1.55
0.9	**5400**	**1.05**	1621	"	"	16100	47700	1.1	4350	1.3
1.5	**3500**	**3.0**	990.4	**BF80Z-../D08MA4**	334	39600	75000	1.7	3050	3.4
1.3	**4000**	**2.6**	1124	"	"	39600	75000	1.5	3500	3.0
1.1	**3300**	**3.2**	1329	**BF80G40-../D08MA4**	340	39600	75000	1.3	2550	4.1
0.95	**4100**	**2.6**	1491	"	"	39600	75000	1.2	2950	3.6
0.85	**4550**	**2.3**	1693	"	"	39600	75000	1.0	3650	2.9
0.7	**5900**	**1.8**	2051	"	"	39600	75000	0.85	4550	2.3
0.6	**7100**	**1.5**	2422	"	"	39600	75000	0.7	5900	1.8
0.55	**7500**	**1.4**	2785	"	"	39600	75000	0.65	6000	1.75
0.46	**9300**	**1.15**	3092	"	"	39600	75000	0.55	7400	1.4
0.65	**6000**	**3.1**	2154	**BF90G50-../D08MA4**	610	42800	120000	0.8	4500	4.1
0.55	**7100**	**2.6**	2656	"	"	42800	120000	0.65	5700	3.2
0.48	**8600**	**2.2**	2952	"	"	42800	120000	0.6	6500	2.8
0.43	**9700**	**1.9**	3286	"	"	42800	120000	0.55	7000	2.6
0.39	**10900**	**1.7**	3644	"	"	42800	120000	0.47	8600	2.2
0.33	**13400**	**1.4**	4366	"	"	42800	120000	0.39	10900	1.7
0.29	**15600**	**1.2**	4839	"	"	42800	120000	0.35	12500	1.5

P = 0.75 kW

50 Hz			i	Type	m	F_{RN}	F_{RV}	60 Hz		
n_2	M_2	f_B						n_2	M_2	f_B
1/min	Nm				kg	N	N	1/min	Nm	
245	**29**	**2.1**	5.72	**BF06-../DSE08LA4**	17	1630	-	295	24	2.6
183	**39**	**1.75**	7.66	"	"	1800	-	220	32.5	2.1
153	**46.5**	**1.5**	9.21	"	"	1900	-	183	39	1.8
116	**61**	**1.25**	12.07	"	"	2000	-	140	51	1.45
99	**72**	**1.2**	14.21	"	"	2100	-	119	60	1.4
83	**86**	**1.1**	16.99	"	"	2500	-	99	72	1.3
69	**103**	**0.92**	20.42	"	"	2700	-	83	86	1.1
119	**60**	**3.1**	11.84	**BF10-../DSE08LA4**	28	2500	-	142	50	3.7
94	**76**	**2.4**	15.04	"	"	2800	-	112	63	2.9
77	**93**	**2.6**	18.23	"	"	2900	-	93	77	3.1
70	**102**	**2.4**	20.05	"	"	3000	-	84	85	2.8
61	**117**	**2.1**	23.28	"	"	3200	-	73	98	2.4
55	**130**	**1.85**	25.60	"	"	3350	-	66	108	2.2
49.5	**144**	**1.65**	28.47	"	"	3450	-	60	119	2.0
45	**159**	**1.5**	31.31	"	"	3600	-	54	132	1.8
39	**183**	**1.3**	36.15	"	"	3800	-	46.5	154	1.55
35.5	**200**	**1.2**	39.75	"	"	3950	-	42.5	168	1.45
33	**215**	**1.1**	43.06	"	"	4100	-	39.5	181	1.35

P = 0.75 kW

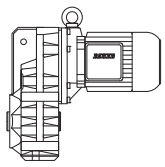

50 Hz			i	Type	m	F_{RN}	F_{RV}	60 Hz		
n_2	M_2	f_B						n_2	M_2	f_B
1/min	Nm				kg	N	N	1/min	Nm	
30	**235**	**1.0**	47.35	**BF10-../DSE08LA4**	"	4250	-	35.5	200	1.2
27.5	**260**	**0.92**	51.28	"	"	4400	-	33	215	1.1
25	**285**	**0.84**	56.39	"	"	4550	-	30	235	1.0
58	**123**	**3.3**	24.25	**BF20-../DSE08LA4**	35	3950	-	70	102	4.0
51	**140**	**3.0**	27.62	"	"	4150	-	61	117	3.6
46.5	**154**	**2.7**	30.40	"	"	4400	-	56	127	3.3
43	**166**	**2.5**	32.58	"	"	4450	-	52	137	3.1
39.5	**181**	**2.3**	35.85	"	"	4650	-	47	152	2.8
34	**210**	**2.0**	41.72	"	"	4950	-	40.5	176	2.4
31	**230**	**1.85**	45.90	"	"	5100	-	37	193	2.2
29	**245**	**1.7**	48.56	"	"	5200	-	35	200	2.1
26.5	**270**	**1.55**	53.43	"	"	5500	-	31.5	225	1.85
24.5	**290**	**1.45**	58.24	"	"	5600	-	29	245	1.7
22	**325**	**1.3**	64.08	"	"	5900	-	26.5	270	1.55
20.5	**345**	**1.2**	69.70	"	"	6100	-	24.5	290	1.45
18.5	**385**	**1.1**	76.69	"	"	6300	-	22	325	1.3
16.5	**430**	**0.98**	87.31	"	"	6600	-	19.5	365	1.15
15	**475**	**0.88**	96.08	"	"	6900	-	17.5	405	1.05
14	**510**	**0.82**	100.2	"	"	7000	-	17	420	1.0
40	**179**	**3.2**	35.00	**BF30-../DSE08LA4**	45	4200	-	48	149	3.9
36.5	**196**	**2.9**	38.49	"	"	4400	-	44	162	3.5
34.5	**205**	**2.8**	41.01	"	"	4500	-	41	174	3.3
31.5	**225**	**2.6**	45.10	"	"	4700	-	37.5	191	3.0
27	**265**	**2.2**	52.20	"	"	5000	-	32.5	220	2.6
24.5	**290**	**2.0**	57.41	"	"	5200	-	29.5	240	2.4
23	**310**	**1.85**	61.17	"	"	5300	-	27.5	260	2.2
21	**340**	**1.7**	67.28	"	"	5500	-	25	285	2.0
19.5	**365**	**1.6**	72.13	"	"	5700	-	23.5	300	1.9
18	**395**	**1.45**	79.34	"	"	5900	-	21.5	330	1.75
16.5	**430**	**1.35**	87.08	"	"	6200	-	19.5	365	1.6
15	**475**	**1.2**	95.79	"	"	6400	-	18	395	1.45
13.5	**530**	**1.1**	107.6	"	"	6700	-	16	445	1.3
12	**590**	**0.97**	118.3	"	"	7000	-	14.5	490	1.15
11.5	**620**	**0.93**	124.7	"	"	7100	-	13.5	530	1.1
10.5	**680**	**0.85**	137.1	"	"	7400	-	12.5	570	1.0
26.5	**270**	**3.3**	53.82	**BF40-../DSE08LA4**	54	7200	-	31.5	225	4.0
23	**310**	**2.9**	61.25	"	"	7600	-	27.5	260	3.5
21	**340**	**2.6**	67.38	"	"	8000	-	25	285	3.2
20	**355**	**2.5**	71.40	"	"	8100	-	24	295	3.1
18	**395**	**2.3**	78.55	"	"	8500	-	21.5	330	2.7
17	**420**	**2.1**	83.91	"	"	8700	-	20.5	345	2.6
15.5	**460**	**1.95**	92.31	"	"	9100	-	18.5	385	2.3
14	**510**	**1.75**	101.0	"	"	9400	-	17	420	2.1
13	**550**	**1.65**	111.1	"	"	9800	-	15.5	460	1.95
11.5	**620**	**1.45**	124.5	"	"	10200	-	13.5	530	1.7
10.5	**680**	**1.3**	137.0	"	"	10600	-	12.5	570	1.6
10	**710**	**1.25**	141.4	**BF40Z-../DSE08LA4**	58	10600	-	12	590	1.55
9.0	**790**	**1.15**	155.6	"	"	10600	-	11	650	1.4
8.2	**870**	**1.05**	171.2	"	"	10600	-	9.9	720	1.25
7.5	**950**	**0.95**	188.3	"	"	10600	-	9.0	790	1.15
7.0	**1020**	**0.88**	202.2	"	"	10600	-	8.4	850	1.05
6.3	**1130**	**0.8**	222.4	"	"	10600	-	7.6	940	0.96
17.5	**405**	**3.2**	81.33	**BF50-../DSE08LA4**	83	11300	-	21	340	3.8
16	**445**	**2.9**	90.24	"	"	11800	-	19	375	3.5
14	**510**	**2.5**	100.9	"	"	12300	-	17	420	3.1
12.5	**570**	**2.3**	114.0	"	"	12900	-	15	475	2.7
11	**650**	**2.0**	127.5	"	"	13600	-	13.5	530	2.5

P = 0.75 kW

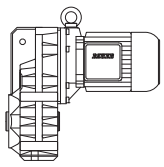

50 Hz			i	Type	m	F_{RN}	F_{RV}	60 Hz		
n_2	M_2	f_B						n_2	M_2	f_B
1/min	Nm				kg	N	N	1/min	Nm	
10.5	**680**	**1.9**	138.1	**BF50Z-../DSE08LA4**	88	13600	-	12.5	570	2.3
9.1	**780**	**1.65**	154.5	"	"	13600	-	11	650	2.0
7.7	**930**	**1.4**	183.5	"	"	13600	-	9.2	770	1.7
6.9	**1030**	**1.25**	205.2	"	"	13600	-	8.2	870	1.5
5.7	**1250**	**1.05**	247.5	"	"	13600	-	6.8	1050	1.25
5.1	**1400**	**0.93**	276.8	"	"	13600	-	6.1	1170	1.1
4.5	**1590**	**0.82**	316.6	"	"	13600	-	5.4	1320	0.98
10	**710**	**3.2**	140.8	**BF60Z-../DSE08LA4**	131	15300	43300	12	590	3.9
8.3	**860**	**2.7**	169.2	"	"	15300	43300	10	710	3.2
7.5	**950**	**2.4**	187.7	"	"	15300	43300	9.0	790	2.9
6.4	**1110**	**2.1**	221.4	"	"	15300	43300	7.6	940	2.4
5.8	**1230**	**1.85**	245.6	"	"	15300	43300	6.9	1030	2.2
4.8	**1490**	**1.55**	293.4	"	"	15300	43300	5.8	1230	1.85
4.3	**1660**	**1.4**	325.6	"	"	15300	43300	5.2	1370	1.7
3.7	**1930**	**1.2**	380.0	"	"	15300	43300	4.5	1590	1.45
3.4	**2100**	**1.1**	421.6	"	"	15300	43300	4.0	1790	1.3
3.1	**2300**	**1.0**	459.9	"	"	15300	43300	3.7	1930	1.2
2.8	**2550**	**0.9**	510.3	"	"	15300	43300	3.3	2150	1.05
2.5	**2600**	**0.96**	569.3	**BF60G20-../DSE08LA4**	139	15300	43300	3.0	2100	1.2
2.1	**3100**	**0.81**	689.0	"	"	15300	43300	2.5	2550	0.98
4.1	**1740**	**3.0**	341.7	**BF70Z-../DSE08LA4**	220	16100	47700	5.0	1430	3.6
3.6	**1980**	**2.6**	398.7	"	"	16100	47700	4.3	1660	3.1
3.2	**2200**	**2.4**	439.2	"	"	16100	47700	3.9	1830	2.8
2.8	**2550**	**2.0**	512.4	"	"	16100	47700	3.3	2150	2.4
2.7	**2400**	**2.4**	524.1	**BF70G20-../DSE08LA4**	217	16100	47700	3.3	1950	2.9
2.5	**2600**	**2.2**	577.5	"	"	16100	47700	3.0	2100	2.7
2.1	**3100**	**1.85**	673.6	"	"	16100	47700	2.5	2550	2.2
1.7	**3950**	**1.45**	872.1	"	"	16100	47700	2.0	3300	1.75
1.4	**4800**	**1.2**	1017	"	"	16100	47700	1.7	3900	1.45
1.1	**6100**	**0.93**	1390	"	"	16100	47700	1.3	5100	1.1
2.2	**3250**	**3.2**	662.1	**BF80Z-../DSE08LA4**	336	39600	75000	2.6	2750	3.8
1.9	**3750**	**2.8**	770.6	"	"	39600	75000	2.2	3250	3.2
1.7	**4200**	**2.5**	874.6	"	"	39600	75000	2.0	3550	3.0
1.5	**4750**	**2.2**	990.4	"	"	39600	75000	1.7	4200	2.5
1.3	**5500**	**1.9**	1124	"	"	39600	75000	1.5	4750	2.2
1.1	**5000**	**2.1**	1329	**BF80G40-../DSE08LA4**	341	39600	75000	1.3	4050	2.6
0.95	**6100**	**1.7**	1491	"	"	39600	75000	1.2	4550	2.3
0.85	**6800**	**1.55**	1693	"	"	39600	75000	1.0	5500	1.9
0.7	**8600**	**1.2**	2051	"	"	39600	75000	0.85	6800	1.55
0.6	**10300**	**1.0**	2422	"	"	39600	75000	0.7	8600	1.2
1.0	**5700**	**3.2**	1444	**BF90G50-../DSE08LA4**	612	42800	120000	1.2	4550	4.1
0.85	**6800**	**2.7**	1678	"	"	42800	120000	1.1	4900	3.8
0.75	**7700**	**2.4**	1867	"	"	42800	120000	0.9	6100	3.0
0.65	**8900**	**2.1**	2154	"	"	42800	120000	0.8	6800	2.7
0.55	**10600**	**1.75**	2656	"	"	42800	120000	0.65	8600	2.2
0.48	**12600**	**1.45**	2952	"	"	42800	120000	0.6	9600	1.95
0.43	**14100**	**1.3**	3286	"	"	42800	120000	0.55	10500	1.75
0.39	**15800**	**1.15**	3644	"	"	42800	120000	0.47	12700	1.45

P = 1.1 kW

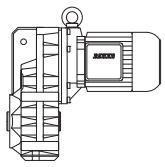

50 Hz			i	Type	m	F_{RN}	F_{RV}	60 Hz		
n_2	M_2	f_B						n_2	M_2	f_B
1/min	Nm				kg	N	N	1/min	Nm	
245	**42.5**	**1.45**	5.72	**BF06-../DSE08XA4**	18	1630	-	295	35.5	1.75
183	**57**	**1.2**	7.66	"	"	1800	-	220	47.5	1.45
153	**68**	**1.05**	9.21	"	"	1900	-	183	57	1.25
116	**90**	**0.83**	12.07	"	"	2000	-	140	75	1.0
99	**106**	**0.8**	14.21	"	"	2100	-	119	88	0.97
250	**42**	**3.3**	5.60	**BF10-../DSE08XA4**	30	1980	-	300	35	3.9
185	**56**	**2.7**	7.58	"	"	2200	-	225	46.5	3.3
145	**72**	**2.5**	9.69	"	"	2350	-	174	60	3.0
119	**88**	**2.1**	11.84	"	"	2500	-	142	73	2.5
94	**111**	**1.65**	15.04	"	"	2800	-	112	93	1.95
77	**136**	**1.75**	18.23	"	"	2900	-	93	112	2.1
70	**150**	**1.6**	20.05	"	"	3000	-	84	125	1.9
61	**172**	**1.4**	23.28	"	"	3200	-	73	143	1.7
55	**191**	**1.25**	25.60	"	"	3350	-	66	159	1.5
49.5	**210**	**1.15**	28.47	"	"	3450	-	60	175	1.35
45	**230**	**1.05**	31.31	"	"	3600	-	54	194	1.25
39	**265**	**0.91**	36.15	"	"	3800	-	46.5	225	1.05
35.5	**295**	**0.81**	39.75	"	"	3950	-	42.5	245	0.98
134	**78**	**3.3**	10.51	**BF20-../DSE08XA4**	36	3100	-	160	65	3.9
107	**98**	**2.9**	13.18	"	"	3300	-	128	82	3.5
91	**115**	**2.7**	15.54	"	"	3450	-	109	96	3.2
84	**125**	**2.9**	16.77	"	"	3500	-	101	104	3.5
76	**138**	**2.7**	18.45	"	"	3600	-	92	114	3.2
64	**164**	**2.4**	22.04	"	"	3800	-	77	136	2.9
58	**181**	**2.2**	24.25	"	"	3950	-	70	150	2.7
51	**205**	**2.0**	27.62	"	"	4150	-	61	172	2.4
46.5	**225**	**1.85**	30.40	"	"	4400	-	56	187	2.2
43	**240**	**1.75**	32.58	"	"	4450	-	52	200	2.1
39.5	**265**	**1.6**	35.85	"	"	4650	-	47	220	1.9
34	**305**	**1.4**	41.72	"	"	4950	-	40.5	255	1.65
31	**335**	**1.25**	45.90	"	"	5100	-	37	280	1.5
29	**360**	**1.15**	48.56	"	"	5200	-	35	300	1.4
26.5	**395**	**1.05**	53.43	"	"	5500	-	31.5	330	1.25
24.5	**425**	**0.99**	58.24	"	"	5600	-	29	360	1.15
22	**475**	**0.88**	64.08	"	"	5900	-	26.5	395	1.05
20.5	**510**	**0.82**	69.70	"	"	6100	-	24.5	425	0.99
65	**161**	**3.3**	21.85	**BF30-../DSE08XA4**	46	3500	-	77	136	3.9
59	**178**	**3.1**	24.03	"	"	3600	-	70	150	3.7
50	**210**	**2.7**	28.23	"	"	3800	-	60	175	3.3
45.5	**230**	**2.5**	31.05	"	"	4000	-	55	191	3.0
40	**260**	**2.2**	35.00	"	"	4200	-	48	215	2.7
36.5	**285**	**2.0**	38.49	"	"	4400	-	44	235	2.4
34.5	**300**	**1.9**	41.01	"	"	4500	-	41	255	2.3
31.5	**330**	**1.75**	45.10	"	"	4700	-	37.5	280	2.1
27	**385**	**1.5**	52.20	"	"	5000	-	32.5	320	1.8
24.5	**425**	**1.35**	57.41	"	"	5200	-	29.5	355	1.6
23	**455**	**1.25**	61.17	"	"	5300	-	27.5	380	1.5
21	**500**	**1.15**	67.28	"	"	5500	-	25	420	1.35
19.5	**530**	**1.1**	72.13	"	"	5700	-	23.5	445	1.3
18	**580**	**0.99**	79.34	"	"	5900	-	21.5	485	1.2
16.5	**630**	**0.91**	87.08	"	"	6200	-	19.5	530	1.1
15	**700**	**0.82**	95.79	"	"	6400	-	18	580	0.99
37.5	**280**	**3.2**	37.64	**BF40-../DSE08XA4**	55	6200	-	45	230	3.9
34	**305**	**3.0**	41.42	"	"	6500	-	41	255	3.5
31	**335**	**2.7**	45.56	"	"	6800	-	37	280	3.2
29	**360**	**2.5**	48.92	"	"	7000	-	34.5	300	3.0
26.5	**395**	**2.3**	53.82	"	"	7200	-	31.5	330	2.7
23	**455**	**2.0**	61.25	"	"	7600	-	27.5	380	2.4
21	**500**	**1.8**	67.38	"	"	8000	-	25	420	2.1

P = 1.1 kW

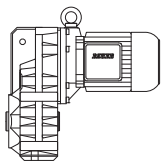

50 Hz			i	Type	m	F_{RN}	F_{RV}	60 Hz		
n_2	M_2	f_B						n_2	M_2	f_B
1/min	Nm				kg	N	N	1/min	Nm	
20	**520**	**1.75**	71.40	**BF40-../DSE08XA4**	"	8100	-	24	435	2.1
18	**580**	**1.55**	78.55	"	"	8500	-	21.5	485	1.85
17	**610**	**1.5**	83.91	"	"	8700	-	20.5	510	1.75
15.5	**670**	**1.35**	92.31	"	"	9100	-	18.5	560	1.6
14	**750**	**1.2**	101.0	"	"	9400	-	17	610	1.5
13	**800**	**1.15**	111.1	"	"	9800	-	15.5	670	1.35
11.5	**910**	**0.99**	124.5	"	"	10200	-	13.5	770	1.15
10.5	**1000**	**0.9**	137.0	"	"	10600	-	12.5	840	1.05
10	**1050**	**0.86**	141.4	**BF40Z-../DSE08XA4**	59	10600	-	12	870	1.05
25	**420**	**3.1**	56.86	**BF50-../DSE08XA4**	84	9300	-	30	350	3.7
22.5	**465**	**2.8**	63.59	"	"	9800	-	26.5	395	3.3
19.5	**530**	**2.5**	72.72	"	"	10700	-	23.5	445	2.9
17.5	**600**	**2.2**	81.33	"	"	11300	-	21	500	2.6
16	**650**	**2.0**	90.24	"	"	11800	-	19	550	2.4
14	**750**	**1.75**	100.9	"	"	12300	-	17	610	2.1
12.5	**840**	**1.55**	114.0	"	"	12900	-	15	700	1.85
11	**950**	**1.35**	127.5	"	"	13600	-	13.5	770	1.7
10.5	**1000**	**1.3**	138.1	**BF50Z-../DSE08XA4**	88	13600	-	12.5	840	1.55
9.1	**1150**	**1.15**	154.5	"	"	13600	-	11	950	1.35
7.7	**1360**	**0.96**	183.5	"	"	13600	-	9.2	1140	1.15
6.9	**1520**	**0.86**	205.2	"	"	13600	-	8.2	1280	1.0
10	**1050**	**2.2**	140.8	**BF60Z-../DSE08XA4**	132	15300	43300	12	870	2.6
8.3	**1260**	**1.85**	169.2	"	"	15300	43300	10	1050	2.2
7.5	**1400**	**1.65**	187.7	"	"	15300	43300	9.0	1160	2.0
6.4	**1640**	**1.4**	221.4	"	"	15300	43300	7.6	1380	1.65
5.8	**1810**	**1.25**	245.6	"	"	15300	43300	6.9	1520	1.5
4.8	**2150**	**1.05**	293.4	"	"	15300	43300	5.8	1810	1.25
4.3	**2400**	**0.96**	325.6	"	"	15300	43300	5.2	2000	1.15
3.7	**2800**	**0.82**	380.0	"	"	15300	43300	4.5	2300	1.0
6.1	**1720**	**3.0**	233.0	**BF70Z-../DSE08XA4**	220	16100	47700	7.3	1430	3.6
5.5	**1910**	**2.7**	258.7	"	"	16100	47700	6.5	1610	3.2
4.7	**2200**	**2.4**	301.8	"	"	16100	47700	5.6	1870	2.8
4.1	**2550**	**2.0**	341.7	"	"	16100	47700	5.0	2100	2.5
3.6	**2900**	**1.8**	398.7	"	"	16100	47700	4.3	2400	2.2
3.2	**3250**	**1.6**	439.2	"	"	16100	47700	3.9	2650	1.95
2.8	**3750**	**1.4**	512.4	"	"	16100	47700	3.3	3150	1.65
2.7	**3650**	**1.55**	524.1	**BF70G20-../DSE08XA4**	218	16100	47700	3.3	2950	1.95
2.5	**3950**	**1.45**	577.5	"	"	16100	47700	3.0	3250	1.75
2.1	**4700**	**1.2**	673.6	"	"	16100	47700	2.5	3900	1.45
1.7	**5900**	**0.97**	872.1	"	"	16100	47700	2.0	4950	1.15
3.2	**3250**	**3.2**	450.4	**BF80Z-../DSE08XA4**	337	39600	75000	3.8	2750	3.8
2.8	**3750**	**2.8**	511.2	"	"	39600	75000	3.3	3150	3.3
2.4	**4350**	**2.4**	583.4	"	"	39600	75000	2.9	3600	2.9
2.2	**4750**	**2.2**	662.1	"	"	39600	75000	2.6	4000	2.6
1.9	**5500**	**1.9**	770.6	"	"	39600	75000	2.2	4750	2.2
1.7	**6100**	**1.7**	874.6	"	"	39600	75000	2.0	5200	2.0
1.5	**7000**	**1.5**	990.4	"	"	39600	75000	1.7	6100	1.7
1.3	**8000**	**1.3**	1124	"	"	39600	75000	1.5	7000	1.5
1.1	**8100**	**1.3**	1329	**BF80G40-../DSE08XA4**	342	39600	75000	1.3	6600	1.6
0.95	**9600**	**1.1**	1491	"	"	39600	75000	1.2	7300	1.45
1.4	**6100**	**3.0**	1043	**BF90G50-../DSE08XA4**	613	42800	120000	1.7	4750	3.9
1.2	**7100**	**2.6**	1204	"	"	42800	120000	1.4	5800	3.2
1.0	**9100**	**2.0**	1444	"	"	42800	120000	1.2	7300	2.5
0.85	**10700**	**1.75**	1678	"	"	42800	120000	1.1	7900	2.3
0.75	**12200**	**1.5**	1867	"	"	42800	120000	0.9	9800	1.9
0.65	**14100**	**1.3**	2154	"	"	42800	120000	0.8	11000	1.7
0.55	**16700**	**1.1**	2656	"	"	42800	120000	0.65	13700	1.35

BF-series paralle shaft geared motors

Selection - parallel shaft geared motors DSE -IE1

P = 1.5 kW

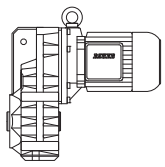

50 Hz			i	Type	m	F_{RN}	F_{RV}	60 Hz		
n_2	M_2	f_B						n_2	M_2	f_B
1/min	Nm				kg	N	N	1/min	Nm	
255	**56**	**2.5**	5.60	**BF10-../DSE09LA4**	36	1980	-	310	46	3.0
188	**76**	**2.0**	7.58	"	"	2200	-	230	62	2.5
147	**97**	**1.8**	9.69	"	"	2350	-	177	80	2.2
120	**119**	**1.55**	11.84	"	"	2500	-	145	98	1.85
95	**150**	**1.2**	15.04	"	"	2800	-	114	125	1.45
78	**183**	**1.3**	18.23	"	"	2900	-	94	152	1.6
71	**200**	**1.2**	20.05	"	"	3000	-	86	166	1.45
61	**230**	**1.05**	23.28	"	"	3200	-	74	193	1.25
56	**255**	**0.94**	25.60	"	"	3350	-	67	210	1.15
50	**285**	**0.84**	28.47	"	"	3450	-	61	230	1.05
178	**80**	**2.8**	8.00	**BF20-../DSE09LA4**	42	2850	-	215	66	3.3
136	**105**	**2.4**	10.51	"	"	3100	-	163	87	2.9
108	**132**	**2.2**	13.18	"	"	3300	-	130	110	2.6
92	**155**	**2.0**	15.54	"	"	3450	-	111	129	2.4
85	**168**	**2.2**	16.77	"	"	3500	-	102	140	2.6
77	**186**	**2.0**	18.45	"	"	3600	-	93	154	2.4
65	**220**	**1.8**	22.04	"	"	3800	-	78	183	2.2
59	**240**	**1.7**	24.25	"	"	3950	-	71	200	2.0
52	**275**	**1.55**	27.62	"	"	4150	-	62	230	1.85
47	**300**	**1.4**	30.40	"	"	4400	-	57	250	1.7
44	**325**	**1.3**	32.58	"	"	4450	-	53	270	1.55
40	**355**	**1.2**	35.85	"	"	4650	-	48	295	1.4
34.5	**415**	**1.0**	41.72	"	"	4950	-	41	345	1.2
31	**460**	**0.91**	45.90	"	"	5100	-	37.5	380	1.1
29.5	**485**	**0.87**	48.56	"	"	5200	-	35.5	400	1.05
143	**100**	**3.2**	9.99	**BF30-../DSE09LA4**	53	2850	-	172	83	3.9
110	**130**	**2.8**	12.91	"	"	3050	-	133	107	3.4
89	**160**	**2.6**	16.00	"	"	3250	-	107	133	3.1
81	**176**	**2.7**	17.65	"	"	3300	-	97	147	3.3
74	**193**	**2.6**	19.41	"	"	3400	-	89	160	3.1
65	**220**	**2.4**	21.85	"	"	3500	-	79	181	2.9
60	**235**	**2.4**	24.03	"	"	3600	-	72	198	2.8
51	**280**	**2.1**	28.23	"	"	3800	-	61	230	2.5
46	**310**	**1.85**	31.05	"	"	4000	-	56	255	2.3
41	**345**	**1.65**	35.00	"	"	4200	-	49	290	2.0
37	**385**	**1.5**	38.49	"	"	4400	-	44.5	320	1.8
35	**405**	**1.4**	41.01	"	"	4500	-	42	340	1.7
31.5	**450**	**1.3**	45.10	"	"	4700	-	38	375	1.55
27.5	**520**	**1.1**	52.20	"	"	5000	-	33	430	1.35
25	**570**	**1.0**	57.41	"	"	5200	-	30	475	1.2
23.5	**600**	**0.96**	61.17	"	"	5300	-	28	510	1.15
21.5	**660**	**0.87**	67.28	"	"	5500	-	25.5	560	1.05
20	**710**	**0.81**	72.13	"	"	5700	-	24	590	0.97
66	**215**	**3.3**	21.60	**BF40-../DSE09LA4**	62	5200	-	80	179	3.9
60	**235**	**3.1**	23.77	"	"	5400	-	72	198	3.7
53	**270**	**2.9**	26.86	"	"	5600	-	64	220	3.5
48.5	**295**	**2.7**	29.55	"	"	5800	-	58	245	3.3
42	**340**	**2.5**	34.21	"	"	6000	-	50	285	3.0
38	**375**	**2.4**	37.64	"	"	6200	-	45.5	310	2.9
34.5	**415**	**2.2**	41.42	"	"	6500	-	41.5	345	2.6
31.5	**450**	**2.0**	45.56	"	"	6800	-	38	375	2.4
29.5	**485**	**1.85**	48.92	"	"	7000	-	35	405	2.2
26.5	**540**	**1.65**	53.82	"	"	7200	-	32	445	2.0
23.5	**600**	**1.5**	61.25	"	"	7600	-	28	510	1.75
21.5	**660**	**1.35**	67.38	"	"	8000	-	25.5	560	1.6
20	**710**	**1.25**	71.40	"	"	8100	-	24	590	1.55
18.5	**770**	**1.15**	78.55	"	"	8500	-	22	650	1.4
17	**840**	**1.05**	83.91	"	"	8700	-	20.5	690	1.3
15.5	**920**	**0.98**	92.31	"	"	9100	-	19	750	1.2
14.5	**980**	**0.92**	101.0	"	"	9400	-	17	840	1.05
13	**1100**	**0.82**	111.1	"	"	9800	-	15.5	920	0.98

P = 1.5 kW

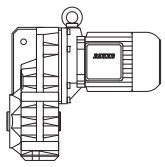

50 Hz			i	Type	m	F_{RN}	F_{RV}	60 Hz		
n_2	M_2	f_B						n_2	M_2	f_B
1/min	Nm				kg	N	N	1/min	Nm	
34	**420**	**3.1**	42.15	**BF50-../DSE09LA4**	90	8500	-	41	345	3.8
30.5	**465**	**2.8**	47.14	"	"	8900	-	36.5	390	3.3
25	**570**	**2.3**	56.86	"	"	9300	-	30.5	465	2.8
22.5	**630**	**2.1**	63.59	"	"	9800	-	27	530	2.5
20	**710**	**1.85**	72.72	"	"	10700	-	24	590	2.2
17.5	**810**	**1.6**	81.33	"	"	11300	-	21.5	660	1.95
16	**890**	**1.45**	90.24	"	"	11800	-	19	750	1.75
14.5	**980**	**1.35**	100.9	"	"	12300	-	17	840	1.55
12.5	**1140**	**1.15**	114.0	"	"	12900	-	15	950	1.35
11.5	**1240**	**1.05**	127.5	"	"	13600	-	13.5	1060	1.25
10.5	**1360**	**0.96**	138.1	**BF50Z-../DSE09LA4**	95	13600	-	12.5	1140	1.15
9.2	**1550**	**0.84**	154.5	"	"	13600	-	11.5	1240	1.05
20	**710**	**3.2**	72.15	**BF60-../DSE09LA4**	120	12000	34000	24	590	3.9
18	**790**	**2.9**	80.05	"	"	12600	35600	21.5	660	3.5
15.5	**920**	**2.5**	93.44	"	"	13500	38200	18.5	770	3.0
14	**1020**	**2.3**	103.7	"	"	14100	39900	16.5	860	2.7
13	**1100**	**2.1**	113.1	"	"	14600	41300	15.5	920	2.5
11.5	**1240**	**1.85**	125.5	"	"	15300	43300	14	1020	2.3
10.5	**1360**	**1.7**	140.8	**BF60Z-../DSE09LA4**	139	15300	43300	12.5	1140	2.0
8.4	**1700**	**1.35**	169.2	"	"	15300	43300	10.5	1360	1.7
7.6	**1880**	**1.2**	187.7	"	"	15300	43300	9.2	1550	1.5
6.5	**2200**	**1.05**	221.4	"	"	15300	43300	7.8	1830	1.25
5.8	**2450**	**0.94**	245.6	"	"	15300	43300	7.0	2000	1.15
8.0	**1790**	**2.9**	179.7	**BF70Z-../DSE09LA4**	227	16100	47700	9.6	1490	3.5
7.2	**1980**	**2.6**	199.7	"	"	16100	47700	8.6	1660	3.1
6.1	**2300**	**2.3**	233.0	"	"	16100	47700	7.4	1930	2.7
5.5	**2600**	**2.0**	258.7	"	"	16100	47700	6.7	2100	2.5
4.8	**2950**	**1.75**	301.8	"	"	16100	47700	5.7	2500	2.1
4.2	**3400**	**1.55**	341.7	"	"	16100	47700	5.1	2800	1.85
3.6	**3950**	**1.3**	398.7	"	"	16100	47700	4.3	3300	1.6
3.3	**4300**	**1.2**	439.2	"	"	16100	47700	3.9	3650	1.4
2.8	**5100**	**1.0**	512.4	"	"	16100	47700	3.4	4200	1.25
2.5	**5400**	**1.05**	577.5	**BF70G20-../DSE09LA4**	225	16100	47700	3.0	4500	1.25
2.2	**6200**	**0.92**	673.6	"	"	16100	47700	2.6	5200	1.1
4.1	**3450**	**3.0**	347.3	**BF80Z-../DSE09LA4**	344	39600	75000	5.0	2850	3.7
3.7	**3850**	**2.7**	394.2	"	"	39600	75000	4.4	3250	3.2
3.2	**4450**	**2.4**	450.4	"	"	39600	75000	3.8	3750	2.8
2.8	**5100**	**2.1**	511.2	"	"	39600	75000	3.4	4200	2.5
2.5	**5700**	**1.85**	583.4	"	"	39600	75000	3.0	4750	2.2
2.2	**6500**	**1.6**	662.1	"	"	39600	75000	2.6	5500	1.9
1.9	**7500**	**1.4**	770.6	"	"	39600	75000	2.3	6200	1.7
1.7	**8400**	**1.25**	874.6	"	"	39600	75000	2.0	7100	1.5
1.5	**9500**	**1.1**	990.4	"	"	39600	75000	1.8	7900	1.35
1.3	**11000**	**0.95**	1124	"	"	39600	75000	1.6	8900	1.2
1.1	**11500**	**0.91**	1329	**BF80G40-../DSE09LA4**	349	39600	75000	1.3	9500	1.1
1.0	**12900**	**0.81**	1491	"	"	39600	75000	1.2	10500	1.0
2.5	**5700**	**3.2**	591.1	**BF90Z-../DSE09LA4**	608	42800	120000	2.9	4900	3.8
2.2	**6500**	**2.8**	658.1	"	"	42800	120000	2.6	5500	3.4
1.9	**7500**	**2.5**	759.0	"	"	42800	120000	2.3	6200	3.0
1.7	**8400**	**2.2**	845.1	"	"	42800	120000	2.1	6800	2.7
1.5	**7900**	**2.3**	976.1	**BF90G50-../DSE09LA4**	620	42800	120000	1.8	6300	2.9
1.4	**8800**	**2.1**	1043	"	"	42800	120000	1.7	7000	2.6
1.2	**10300**	**1.8**	1204	"	"	42800	120000	1.5	7900	2.3
1.0	**12900**	**1.45**	1444	"	"	42800	120000	1.2	10500	1.75
0.85	**15200**	**1.2**	1678	"	"	42800	120000	1.1	11400	1.6
0.8	**16100**	**1.15**	1867	"	"	42800	120000	0.95	13200	1.4
0.7	**18400**	**1.0**	2154	"	"	42800	120000	0.8	15800	1.15

P = 2.2 kW

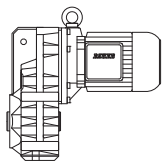

50 Hz			i	Type	m	F_{RN}	F_{RV}	60 Hz		
n_2	M_2	f_B						n_2	M_2	f_B
1/min	Nm				kg	N	N	1/min	Nm	
255	**82**	**1.7**	5.60	**BF10-../DSE09XA4**	40	1980	-	310	67	2.1
188	**111**	**1.4**	7.58	"	"	2200	-	230	91	1.7
147	**142**	**1.25**	9.69	"	"	2350	-	177	118	1.5
120	**175**	**1.05**	11.84	"	"	2500	-	145	144	1.25
95	**220**	**0.83**	15.04	"	"	2800	-	114	184	0.99
78	**265**	**0.91**	18.23	"	"	2900	-	94	220	1.1
71	**295**	**0.81**	20.05	"	"	3000	-	86	240	1.0
240	**87**	**2.3**	6.04	**BF20-../DSE09XA4**	46	2550	-	285	73	2.7
178	**118**	**1.85**	8.00	"	"	2850	-	215	97	2.3
136	**154**	**1.65**	10.51	"	"	3100	-	163	128	2.0
108	**194**	**1.45**	13.18	"	"	3300	-	130	161	1.75
92	**225**	**1.35**	15.54	"	"	3450	-	111	189	1.65
85	**245**	**1.5**	16.77	"	"	3500	-	102	205	1.75
77	**270**	**1.35**	18.45	"	"	3600	-	93	225	1.65
65	**320**	**1.25**	22.04	"	"	3800	-	78	265	1.5
59	**355**	**1.15**	24.25	"	"	3950	-	71	295	1.35
52	**400**	**1.05**	27.62	"	"	4150	-	62	335	1.25
47	**445**	**0.94**	30.40	"	"	4400	-	57	365	1.15
44	**475**	**0.88**	32.58	"	"	4450	-	53	395	1.05
40	**520**	**0.81**	35.85	"	"	4650	-	48	435	0.97
225	**93**	**2.8**	6.34	**BF30-../DSE09XA4**	57	2400	-	270	77	3.4
176	**119**	**2.4**	8.07	"	"	2650	-	215	97	2.9
143	**146**	**2.2**	9.99	"	"	2850	-	172	122	2.6
110	**191**	**1.9**	12.91	"	"	3050	-	133	157	2.3
89	**235**	**1.75**	16.00	"	"	3250	-	107	196	2.1
81	**255**	**1.9**	17.65	"	"	3300	-	97	215	2.2
74	**280**	**1.8**	19.41	"	"	3400	-	89	235	2.1
65	**320**	**1.65**	21.85	"	"	3500	-	79	265	2.0
60	**350**	**1.6**	24.03	"	"	3600	-	72	290	1.9
51	**410**	**1.4**	28.23	"	"	3800	-	61	340	1.7
46	**455**	**1.25**	31.05	"	"	4000	-	56	375	1.55
41	**510**	**1.15**	35.00	"	"	4200	-	49	425	1.35
37	**560**	**1.05**	38.49	"	"	4400	-	44.5	470	1.2
35	**600**	**0.96**	41.01	"	"	4500	-	42	500	1.15
31.5	**660**	**0.87**	45.10	"	"	4700	-	38	550	1.05
187	**112**	**3.3**	7.62	**BF40-../DSE09XA4**	66	3900	-	225	93	4.0
150	**140**	**3.0**	9.48	"	"	4150	-	181	116	3.6
121	**173**	**2.7**	11.79	"	"	4450	-	146	143	3.3
95	**220**	**2.4**	15.02	"	"	4800	-	114	184	2.8
82	**255**	**2.5**	17.35	"	"	4950	-	99	210	3.0
75	**280**	**2.4**	19.09	"	"	5100	-	90	230	2.9
66	**315**	**2.2**	21.60	"	"	5200	-	80	260	2.7
60	**350**	**2.1**	23.77	"	"	5400	-	72	290	2.5
53	**395**	**1.95**	26.86	"	"	5600	-	64	325	2.4
48.5	**430**	**1.9**	29.55	"	"	5800	-	58	360	2.2
42	**500**	**1.7**	34.21	"	"	6000	-	50	420	2.0
38	**550**	**1.6**	37.64	"	"	6200	-	45.5	460	1.95
34.5	**600**	**1.5**	41.42	"	"	6500	-	41.5	500	1.8
31.5	**660**	**1.35**	45.56	"	"	6800	-	38	550	1.65
29.5	**710**	**1.25**	48.92	"	"	7000	-	35	600	1.5
26.5	**790**	**1.15**	53.82	"	"	7200	-	32	650	1.4
23.5	**890**	**1.0**	61.25	"	"	7600	-	28	750	1.2
21.5	**970**	**0.93**	67.38	"	"	8000	-	25.5	820	1.1
20	**1050**	**0.86**	71.40	"	"	8100	-	24	870	1.05
18.5	**1130**	**0.8**	78.55	"	"	8500	-	22	950	0.95

P = 2.2 kW

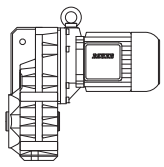

50 Hz			i	Type	m	F_{RN}	F_{RV}	60 Hz		
n_2	M_2	f_B						n_2	M_2	f_B
1/min	Nm				kg	N	N	1/min	Nm	
62	**335**	**3.3**	23.14	**BF50-../DSE09XA4**	94	6800	-	74	280	4.0
55	**380**	**3.1**	25.88	"	"	7100	-	67	310	3.8
45	**465**	**2.7**	31.73	"	"	7500	-	54	385	3.3
40.5	**510**	**2.5**	35.49	"	"	7800	-	48.5	430	3.0
34	**610**	**2.1**	42.15	"	"	8500	-	41	510	2.5
30.5	**680**	**1.9**	47.14	"	"	8900	-	36.5	570	2.3
25	**840**	**1.55**	56.86	"	"	9300	-	30.5	680	1.9
22.5	**930**	**1.4**	63.59	"	"	9800	-	27	770	1.7
20	**1050**	**1.25**	72.72	"	"	10700	-	24	870	1.5
17.5	**1200**	**1.1**	81.33	"	"	11300	-	21.5	970	1.35
16	**1310**	**0.99**	90.24	"	"	11800	-	19	1100	1.2
14.5	**1440**	**0.9**	100.9	"	"	12300	-	17	1230	1.05
31	**670**	**3.3**	46.16	**BF60-../DSE09XA4**	124	9900	28000	37.5	560	4.0
26.5	**790**	**2.9**	54.44	"	"	10500	29700	31.5	660	3.5
24	**870**	**2.6**	60.40	"	"	11100	31400	28.5	730	3.2
20	**1050**	**2.2**	72.15	"	"	12000	34000	24	870	2.6
18	**1160**	**2.0**	80.05	"	"	12600	35600	21.5	970	2.4
15.5	**1350**	**1.7**	93.44	"	"	13500	38200	18.5	1130	2.0
14	**1500**	**1.55**	103.7	"	"	14100	39900	16.5	1270	1.8
13	**1610**	**1.45**	113.1	"	"	14600	41300	15.5	1350	1.7
11.5	**1820**	**1.25**	125.5	"	"	15300	43300	14	1500	1.55
10.5	**2000**	**1.15**	140.8	**BF60Z-../DSE09XA4**	143	15300	43300	12.5	1680	1.35
8.4	**2500**	**0.92**	169.2	"	"	15300	43300	10.5	2000	1.15
7.6	**2750**	**0.84**	187.7	"	"	15300	43300	9.2	2250	1.0
12	**1750**	**3.0**	122.7	**BF70-../DSE09XA4**	210	16100	47700	14	1500	3.5
11	**1910**	**2.7**	133.0	**BF70Z-../DSE09XA4**	231	16100	47700	13	1610	3.2
9.3	**2250**	**2.3**	154.0	"	"	16100	47700	11.5	1820	2.9
8.0	**2600**	**2.0**	179.7	"	"	16100	47700	9.6	2150	2.4
7.2	**2900**	**1.8**	199.7	"	"	16100	47700	8.6	2400	2.2
6.1	**3400**	**1.55**	233.0	"	"	16100	47700	7.4	2800	1.85
5.5	**3800**	**1.35**	258.7	"	"	16100	47700	6.7	3100	1.7
4.8	**4350**	**1.2**	301.8	"	"	16100	47700	5.7	3650	1.4
4.2	**5000**	**1.05**	341.7	"	"	16100	47700	5.1	4100	1.25
3.6	**5800**	**0.9**	398.7	"	"	16100	47700	4.3	4850	1.05
3.3	**6300**	**0.83**	439.2	"	"	16100	47700	3.9	5300	0.98
6.8	**3050**	**3.1**	209.4	**BF80-../DSE09XA4**	307	34300	75000	8.2	2550	3.7
6.0	**3500**	**2.7**	237.1	"	"	36900	75000	7.3	2850	3.3
5.3	**3950**	**2.4**	269.1	"	"	39600	75000	6.4	3250	2.9
4.9	**4250**	**2.5**	291.7	**BF80Z-../DSE09XA4**	348	39600	75000	5.9	3550	3.0
4.1	**5100**	**2.1**	347.3	"	"	39600	75000	5.0	4200	2.5
3.7	**5600**	**1.9**	394.2	"	"	39600	75000	4.4	4750	2.2
3.2	**6500**	**1.6**	450.4	"	"	39600	75000	3.8	5500	1.9
2.8	**7500**	**1.4**	511.2	"	"	39600	75000	3.4	6100	1.7
2.5	**8400**	**1.25**	583.4	"	"	39600	75000	3.0	7000	1.5
2.2	**9500**	**1.1**	662.1	"	"	39600	75000	2.6	8000	1.3
1.9	**11000**	**0.95**	770.6	"	"	39600	75000	2.3	9100	1.15
1.7	**12300**	**0.85**	874.6	"	"	39600	75000	2.0	10500	1.0
3.2	**6500**	**2.8**	456.7	**BF90Z-../DSE09XA4**	612	42800	120000	3.8	5500	3.4
2.8	**7500**	**2.5**	508.5	"	"	42800	120000	3.4	6100	3.0
2.5	**8400**	**2.2**	591.1	"	"	42800	120000	2.9	7200	2.6
2.2	**9500**	**1.95**	658.1	"	"	42800	120000	2.6	8000	2.3
1.9	**11000**	**1.7**	759.0	"	"	42800	120000	2.3	9100	2.0
1.7	**12300**	**1.5**	845.1	"	"	42800	120000	2.1	10000	1.85
1.5	**12400**	**1.5**	976.1	**BF90G50-../DSE09XA4**	624	42800	120000	1.8	10000	1.85
1.4	**13600**	**1.35**	1043	"	"	42800	120000	1.7	10900	1.7
1.2	**15800**	**1.15**	1204	"	"	42800	120000	1.5	12300	1.5
1.0	**19600**	**0.94**	1444	"	"	42800	120000	1.2	16100	1.15

BF-series paralle shaft geared motors

Selection - parallel shaft geared motors DSE -IE1

P = 3 kW

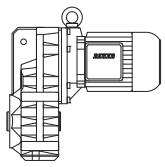

50 Hz			i	Type	m	F_{RN}	F_{RV}	60 Hz		
n_2	M_2	f_B						n_2	M_2	f_B
1/min	Nm				kg	N	N	1/min	Nm	
225	**127**	**2.1**	6.34	**BF30-../DSE11SA4**	60	2400	-	270	106	2.5
176	**162**	**1.75**	8.07	"	"	2650	-	215	133	2.2
143	**200**	**1.6**	9.99	"	"	2850	-	172	166	1.95
110	**260**	**1.4**	12.91	"	"	3050	-	133	215	1.7
89	**320**	**1.3**	16.00	"	"	3250	-	107	265	1.55
81	**350**	**1.35**	17.65	"	"	3300	-	97	295	1.6
74	**385**	**1.3**	19.41	"	"	3400	-	89	320	1.55
65	**440**	**1.2**	21.85	"	"	3500	-	79	360	1.45
60	**475**	**1.15**	24.03	"	"	3600	-	72	395	1.4
51	**560**	**1.05**	28.23	"	"	3800	-	61	465	1.25
46	**620**	**0.93**	31.05	"	"	4000	-	56	510	1.15
41	**690**	**0.83**	35.00	"	"	4200	-	49	580	0.99
245	**116**	**2.9**	5.87	**BF40-../DSE11SA4**	74	3550	-	295	97	3.5
187	**153**	**2.4**	7.62	"	"	3900	-	225	127	2.9
150	**191**	**2.2**	9.48	"	"	4150	-	181	158	2.6
121	**235**	**2.0**	11.79	"	"	4450	-	146	196	2.4
95	**300**	**1.75**	15.02	"	"	4800	-	114	250	2.1
82	**345**	**1.85**	17.35	"	"	4950	-	99	285	2.2
75	**380**	**1.75**	19.09	"	"	5100	-	90	315	2.1
66	**430**	**1.65**	21.60	"	"	5200	-	80	355	2.0
60	**475**	**1.55**	23.77	"	"	5400	-	72	395	1.85
53	**540**	**1.45**	26.86	"	"	5600	-	64	445	1.75
48.5	**590**	**1.35**	29.55	"	"	5800	-	58	490	1.65
42	**680**	**1.25**	34.21	"	"	6000	-	50	570	1.5
38	**750**	**1.2**	37.64	"	"	6200	-	45.5	620	1.45
34.5	**830**	**1.1**	41.42	"	"	6500	-	41.5	690	1.3
31.5	**900**	**1.0**	45.56	"	"	6800	-	38	750	1.2
29.5	**970**	**0.93**	48.92	"	"	7000	-	35	810	1.1
26.5	**1080**	**0.83**	53.82	"	"	7200	-	32	890	1.0
133	**215**	**3.1**	10.68	**BF50-../DSE11SA4**	104	5600	-	161	177	3.8
97	**295**	**2.7**	14.65	"	"	6100	-	117	240	3.3
86	**330**	**2.9**	16.70	"	"	6200	-	103	275	3.5
77	**370**	**2.7**	18.68	"	"	6400	-	92	310	3.2
62	**460**	**2.4**	23.14	"	"	6800	-	74	385	2.9
55	**520**	**2.2**	25.88	"	"	7100	-	67	425	2.7
45	**630**	**2.0**	31.73	"	"	7500	-	54	530	2.4
40.5	**700**	**1.85**	35.49	"	"	7800	-	48.5	590	2.2
34	**840**	**1.55**	42.15	"	"	8500	-	41	690	1.9
30.5	**930**	**1.4**	47.14	"	"	8900	-	36.5	780	1.65
25	**1140**	**1.15**	56.86	"	"	9300	-	30.5	930	1.4
22.5	**1270**	**1.0**	63.59	"	"	9800	-	27	1060	1.25
20	**1430**	**0.91**	72.72	"	"	10700	-	24	1190	1.1
17.5	**1630**	**0.8**	81.33	"	"	11300	-	21.5	1330	0.98
46	**620**	**3.1**	31.20	**BF60-../DSE11SA4**	135	8800	24900	55	520	3.7
41.5	**690**	**2.9**	34.62	"	"	9100	25700	49.5	570	3.5
34.5	**830**	**2.6**	41.60	"	"	9600	27100	41.5	690	3.1
31	**920**	**2.4**	46.16	"	"	9900	28000	37.5	760	2.9
26.5	**1080**	**2.1**	54.44	"	"	10500	29700	31.5	900	2.6
24	**1190**	**1.95**	60.40	"	"	11100	31400	28.5	1000	2.3
20	**1430**	**1.6**	72.15	"	"	12000	34000	24	1190	1.95
18	**1590**	**1.45**	80.05	"	"	12600	35600	21.5	1330	1.75
15.5	**1840**	**1.25**	93.44	"	"	13500	38200	18.5	1540	1.5
14	**2000**	**1.15**	103.7	"	"	14100	39900	16.5	1730	1.35
13	**2200**	**1.05**	113.1	"	"	14600	41300	15.5	1840	1.25
11.5	**2450**	**0.94**	125.5	"	"	15300	43300	14	2000	1.15
10.5	**2700**	**0.85**	140.8	**BF60Z-../DSE11SA4**	151	15300	43300	12.5	2250	1.0
17.5	**1630**	**3.2**	81.82	**BF70-../DSE11SA4**	214	12800	41300	21	1360	3.8
15	**1910**	**2.7**	95.46	"	"	14000	43700	18	1590	3.3
13.5	**2100**	**2.5**	105.2	"	"	14700	45100	16.5	1730	3.0
12	**2350**	**2.2**	122.7	"	"	16100	47700	14	2000	2.6

P = 3 kW

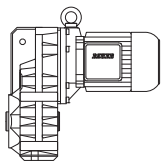

50 Hz			i	Type	m	F_{RN}	F_{RV}	60 Hz		
n_2	M_2	f_B						n_2	M_2	f_B
1/min	Nm				kg	N	N	1/min	Nm	
11	**2600**	**2.0**	133.0	**BF70Z-../DSE11SA4**	241	16100	47700	13	2200	2.4
9.3	**3050**	**1.7**	154.0	"	"	16100	47700	11.5	2450	2.1
8.0	**3550**	**1.45**	179.7	"	"	16100	47700	9.6	2950	1.75
7.2	**3950**	**1.3**	199.7	"	"	16100	47700	8.6	3300	1.6
6.1	**4650**	**1.1**	233.0	"	"	16100	47700	7.4	3850	1.35
5.5	**5200**	**1.0**	258.7	"	"	16100	47700	6.7	4250	1.2
4.8	**5900**	**0.88**	301.8	"	"	16100	47700	5.7	5000	1.05
9.0	**3150**	**3.0**	158.5	**BF80-../DSE11SA4**	310	29000	75000	11	2600	3.7
7.7	**3700**	**2.6**	184.5	"	"	31800	75000	9.3	3050	3.1
6.8	**4200**	**2.3**	209.4	"	"	34300	75000	8.2	3450	2.8
6.0	**4750**	**2.0**	237.1	"	"	36900	75000	7.3	3900	2.4
5.3	**5400**	**1.75**	269.1	"	"	39600	75000	6.4	4450	2.1
4.9	**5800**	**1.8**	291.7	**BF80Z-../DSE11SA4**	357	39600	75000	5.9	4850	2.2
4.1	**6900**	**1.5**	347.3	"	"	39600	75000	5.0	5700	1.85
3.7	**7700**	**1.35**	394.2	"	"	39600	75000	4.4	6500	1.6
3.2	**8900**	**1.2**	450.4	"	"	39600	75000	3.8	7500	1.4
2.8	**10200**	**1.05**	511.2	"	"	39600	75000	3.4	8400	1.25
2.5	**11400**	**0.92**	583.4	"	"	39600	75000	3.0	9500	1.1
2.2	**13000**	**0.81**	662.1	"	"	39600	75000	2.6	11000	0.95
5.5	**5200**	**3.2**	259.0	**BF90-../DSE11SA4**	563	42800	120000	6.7	4250	4.0
4.8	**5900**	**3.1**	300.4	**BF90Z-../DSE11SA4**	623	42800	120000	5.7	5000	3.7
4.2	**6800**	**2.7**	343.6	"	"	42800	120000	5.0	5700	3.2
3.8	**7500**	**2.5**	382.6	"	"	42800	120000	4.5	6300	2.9
3.2	**8900**	**2.1**	456.7	"	"	42800	120000	3.8	7500	2.5
2.8	**10200**	**1.8**	508.5	"	"	42800	120000	3.4	8400	2.2
2.5	**11400**	**1.6**	591.1	"	"	42800	120000	2.9	9800	1.9
2.2	**13000**	**1.4**	658.1	"	"	42800	120000	2.6	11000	1.7
1.9	**15000**	**1.25**	759.0	"	"	42800	120000	2.3	12400	1.5
1.7	**16800**	**1.1**	845.1	"	"	42800	120000	2.1	13600	1.35
1.5	**17500**	**1.05**	976.1	**BF90G50-../DSE11SA4**	633	42800	120000	1.8	14300	1.3
1.4	**19000**	**0.97**	1043	"	"	42800	120000	1.7	15400	1.2
1.2	**22200**	**0.83**	1204	"	"	42800	120000	1.5	17400	1.05

P = 4 kW

n_2	M_2	f_B						n_2	M_2	f_B
1/min	Nm				kg	N	N	1/min	Nm	
225	**169**	**1.55**	6.34	**BF30-../DSE11MA4**	66	2400	-	270	141	1.85
176	**215**	**1.35**	8.07	"	"	2650	-	215	177	1.6
143	**265**	**1.2**	9.99	"	"	2850	-	172	220	1.45
110	**345**	**1.05**	12.91	"	"	3050	-	133	285	1.3
89	**425**	**0.96**	16.00	"	"	3250	-	107	355	1.15
81	**470**	**1.0**	17.65	"	"	3300	-	97	390	1.25
74	**510**	**0.98**	19.41	"	"	3400	-	89	425	1.2
65	**580**	**0.91**	21.85	"	"	3500	-	79	480	1.1
60	**630**	**0.88**	24.03	"	"	3600	-	72	530	1.05
245	**155**	**2.2**	5.87	**BF40-../DSE11MA4**	80	3550	-	295	129	2.6
187	**200**	**1.85**	7.62	"	"	3900	-	225	169	2.2
150	**250**	**1.65**	9.48	"	"	4150	-	181	210	2.0
121	**315**	**1.5**	11.79	"	"	4450	-	146	260	1.8
95	**400**	**1.3**	15.02	"	"	4800	-	114	335	1.55
82	**465**	**1.35**	17.35	"	"	4950	-	99	385	1.65
75	**500**	**1.35**	19.09	"	"	5100	-	90	420	1.6
66	**570**	**1.25**	21.60	"	"	5200	-	80	475	1.5
60	**630**	**1.15**	23.77	"	"	5400	-	72	530	1.4
53	**720**	**1.1**	26.86	"	"	5600	-	64	590	1.3
48.5	**780**	**1.05**	29.55	"	"	5800	-	58	650	1.25

BF-series paralle shaft geared motors

Selection - parallel shaft geared motors DSE -IE1

P = 4 kW

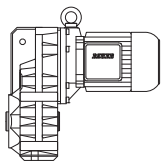

50 Hz			i	Type	m	F_{RN}	F_{RV}	60 Hz		
n_2	M_2	f_B						n_2	M_2	f_B
1/min	Nm				kg	N	N	1/min	Nm	
42	**900**	**0.95**	34.21	**BF40-../DSE11MA4**	"	6000	-	50	760	1.15
38	**1000**	**0.89**	37.64	"	"	6200	-	45.5	830	1.1
34.5	**1100**	**0.82**	41.42	"	"	6500	-	41.5	920	0.98
185	**205**	**2.8**	7.71	**BF50-../DSE11MA4**	110	5100	-	225	169	3.3
133	**285**	**2.4**	10.68	"	"	5600	-	161	235	2.9
97	**390**	**2.0**	14.65	"	"	6100	-	117	325	2.4
86	**440**	**2.2**	16.70	"	"	6200	-	103	370	2.6
77	**495**	**2.0**	18.68	"	"	6400	-	92	415	2.4
62	**610**	**1.8**	23.14	"	"	6800	-	74	510	2.2
55	**690**	**1.7**	25.88	"	"	7100	-	67	570	2.0
45	**840**	**1.5**	31.73	"	"	7500	-	54	700	1.8
40.5	**940**	**1.4**	35.49	"	"	7800	-	48.5	780	1.65
34	**1120**	**1.15**	42.15	"	"	8500	-	41	930	1.4
30.5	**1250**	**1.05**	47.14	"	"	8900	-	36.5	1040	1.25
25	**1520**	**0.86**	56.86	"	"	9300	-	30.5	1250	1.05
100	**380**	**3.1**	14.24	**BF60-../DSE11MA4**	141	7100	20000	121	315	3.8
84	**450**	**3.2**	16.96	"	"	7300	20600	101	375	3.9
76	**500**	**3.0**	18.81	"	"	7600	21500	91	415	3.7
63	**600**	**2.8**	22.58	"	"	8000	22600	76	500	3.3
57	**670**	**2.6**	25.05	"	"	8200	23200	69	550	3.2
46	**830**	**2.3**	31.20	"	"	8800	24900	55	690	2.8
41.5	**920**	**2.2**	34.62	"	"	9100	25700	49.5	770	2.6
34.5	**1100**	**1.95**	41.60	"	"	9600	27100	41.5	920	2.3
31	**1230**	**1.8**	46.16	"	"	9900	28000	37.5	1010	2.2
26.5	**1440**	**1.6**	54.44	"	"	10500	29700	31.5	1210	1.9
24	**1590**	**1.45**	60.40	"	"	11100	31400	28.5	1340	1.7
20	**1910**	**1.2**	72.15	"	"	12000	34000	24	1590	1.45
18	**2100**	**1.1**	80.05	"	"	12600	35600	21.5	1770	1.3
15.5	**2450**	**0.94**	93.44	"	"	13500	38200	18.5	2050	1.1
14	**2700**	**0.85**	103.7	"	"	14100	39900	16.5	2300	1.0
23	**1660**	**3.1**	61.94	**BF70-../DSE11MA4**	220	10800	37400	28	1360	3.8
20	**1910**	**2.7**	72.26	"	"	12000	39600	24	1590	3.3
17.5	**2150**	**2.4**	81.82	"	"	12800	41300	21	1810	2.9
15	**2500**	**2.1**	95.46	"	"	14000	43700	18	2100	2.5
13.5	**2800**	**1.85**	105.2	"	"	14700	45100	16.5	2300	2.3
12	**3150**	**1.65**	122.7	"	"	16100	47700	14	2700	1.95
11	**3450**	**1.5**	133.0	**BF70Z-../DSE11MA4**	247	16100	47700	13	2900	1.8
9.3	**4100**	**1.25**	154.0	"	"	16100	47700	11.5	3300	1.6
8.0	**4750**	**1.1**	179.7	"	"	16100	47700	9.6	3950	1.3
7.2	**5300**	**0.98**	199.7	"	"	16100	47700	8.6	4400	1.2
6.1	**6200**	**0.84**	233.0	"	"	16100	47700	7.4	5100	1.0
12	**3150**	**3.0**	122.4	**BF80-../DSE11MA4**	316	24500	75000	14	2700	3.5
10.5	**3600**	**2.6**	139.7	"	"	26700	75000	12.5	3050	3.1
9.0	**4200**	**2.3**	158.5	"	"	29000	75000	11	3450	2.8
7.7	**4950**	**1.9**	184.5	"	"	31800	75000	9.3	4100	2.3
6.8	**5600**	**1.7**	209.4	"	"	34300	75000	8.2	4650	2.0
6.0	**6300**	**1.5**	237.1	"	"	36900	75000	7.3	5200	1.85
5.3	**7200**	**1.3**	269.1	"	"	39600	75000	6.4	5900	1.6
4.9	**7700**	**1.35**	291.7	**BF80Z-../DSE11MA4**	363	39600	75000	5.9	6400	1.65
4.1	**9300**	**1.15**	347.3	"	"	39600	75000	5.0	7600	1.4
3.7	**10300**	**1.0**	394.2	"	"	39600	75000	4.4	8600	1.2
3.2	**11900**	**0.88**	450.4	"	"	39600	75000	3.8	10000	1.05
7.2	**5300**	**3.2**	198.8	**BF90-../DSE11MA4**	569	36000	111300	8.7	4350	3.9
6.2	**6100**	**2.8**	232.6	"	"	39900	118300	7.4	5100	3.3
5.5	**6900**	**2.4**	259.0	"	"	42800	120000	6.7	5700	2.9
5.3	**7200**	**2.6**	269.8	**BF90Z-../DSE11MA4**	629	42800	120000	6.4	5900	3.1
4.8	**7900**	**2.3**	300.4	"	"	42800	120000	5.7	6700	2.8
4.2	**9000**	**2.1**	343.6	"	"	42800	120000	5.0	7600	2.4

P = 4 kW

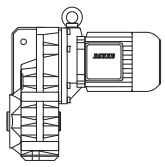

50 Hz			i	Type	m	F_{RN}	F_{RV}	60 Hz		
n_2	M_2	f_B						n_2	M_2	f_B
1/min	Nm				kg	N	N	1/min	Nm	
3.8	**10000**	**1.85**	382.6	**BF90Z-../DSE11MA4**	"	42800	120000	4.5	8400	2.2
3.2	**11900**	**1.55**	456.7	"	"	42800	120000	3.8	10000	1.85
2.8	**13600**	**1.35**	508.5	"	"	42800	120000	3.4	11200	1.65
2.5	**15200**	**1.2**	591.1	"	"	42800	120000	2.9	13100	1.4
2.2	**17300**	**1.05**	658.1	"	"	42800	120000	2.6	14600	1.25
1.9	**20100**	**0.92**	759.0	"	"	42800	120000	2.3	16600	1.1
1.7	**22400**	**0.83**	845.1	"	"	42800	120000	2.1	18100	1.0

P = 5.5 kW

50 Hz			i	Type	m	F_{RN}	F_{RV}	60 Hz		
n_2	M_2	f_B						n_2	M_2	f_B
1/min	Nm				kg	N	N	1/min	Nm	
225	**230**	**1.15**	6.34	**BF30-../DSE11LA4**	78	2400	-	270	194	1.35
176	**295**	**0.97**	8.07	"	"	2650	-	215	240	1.2
143	**365**	**0.88**	9.99	"	"	2850	-	172	305	1.05
245	**210**	**1.6**	5.87	**BF40-../DSE11LA4**	92	3550	-	295	178	1.9
187	**280**	**1.3**	7.62	"	"	3900	-	225	230	1.6
150	**350**	**1.2**	9.48	"	"	4150	-	181	290	1.45
121	**430**	**1.1**	11.79	"	"	4450	-	146	355	1.3
95	**550**	**0.95**	15.02	"	"	4800	-	114	460	1.15
82	**640**	**0.99**	17.35	"	"	4950	-	99	530	1.2
75	**700**	**0.95**	19.09	"	"	5100	-	90	580	1.15
66	**790**	**0.89**	21.60	"	"	5200	-	80	650	1.1
60	**870**	**0.85**	23.77	"	"	5400	-	72	720	1.0
265	**198**	**2.5**	5.38	**BF50-../DSE11LA4**	122	4500	-	320	164	3.0
185	**280**	**2.0**	7.71	"	"	5100	-	225	230	2.5
133	**390**	**1.75**	10.68	"	"	5600	-	161	325	2.1
97	**540**	**1.45**	14.65	"	"	6100	-	117	445	1.8
86	**610**	**1.55**	16.70	"	"	6200	-	103	500	1.9
77	**680**	**1.5**	18.68	"	"	6400	-	92	570	1.75
62	**840**	**1.3**	23.14	"	"	6800	-	74	700	1.6
55	**950**	**1.25**	25.88	"	"	7100	-	67	780	1.5
45	**1160**	**1.1**	31.73	"	"	7500	-	54	970	1.3
40.5	**1290**	**1.0**	35.49	"	"	7800	-	48.5	1080	1.2
34	**1540**	**0.84**	42.15	"	"	8500	-	41	1280	1.0
184	**285**	**3.0**	7.74	**BF60-../DSE11LA4**	153	6000	16900	225	230	3.8
138	**380**	**2.7**	10.31	"	"	6500	18400	166	315	3.2
100	**520**	**2.3**	14.24	"	"	7100	20000	121	430	2.8
84	**620**	**2.3**	16.96	"	"	7300	20600	101	520	2.8
76	**690**	**2.2**	18.81	"	"	7600	21500	91	570	2.7
63	**830**	**2.0**	22.58	"	"	8000	22600	76	690	2.4
57	**920**	**1.9**	25.05	"	"	8200	23200	69	760	2.3
46	**1140**	**1.65**	31.20	"	"	8800	24900	55	950	2.0
41.5	**1260**	**1.6**	34.62	"	"	9100	25700	49.5	1060	1.85
34.5	**1520**	**1.4**	41.60	"	"	9600	27100	41.5	1260	1.7
31	**1690**	**1.3**	46.16	"	"	9900	28000	37.5	1400	1.6
26.5	**1980**	**1.15**	54.44	"	"	10500	29700	31.5	1660	1.4
24	**2150**	**1.05**	60.40	"	"	11100	31400	28.5	1840	1.25
20	**2600**	**0.88**	72.15	"	"	12000	34000	24	2150	1.05
33.5	**1560**	**3.3**	43.02	**BF70-../DSE11LA4**	232	8700	32800	40	1310	4.0
30	**1750**	**3.0**	47.82	"	"	9100	34000	36	1450	3.6
25.5	**2050**	**2.5**	55.79	"	"	10200	36000	31	1690	3.1
23	**2250**	**2.3**	61.94	"	"	10800	37400	28	1870	2.8
20	**2600**	**2.0**	72.26	"	"	12000	39600	24	2150	2.4
17.5	**3000**	**1.75**	81.82	"	"	12800	41300	21	2500	2.1
15	**3500**	**1.5**	95.46	"	"	14000	43700	18	2900	1.8
13.5	**3850**	**1.35**	105.2	"	"	14700	45100	16.5	3150	1.65
12	**4350**	**1.2**	122.7	"	"	16100	47700	14	3750	1.4

P = 5.5 kW

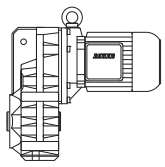

50 Hz			i	Type	m	F_{RN}	F_{RV}	60 Hz		
n_2	M_2	f_B						n_2	M_2	f_B
1/min	Nm				kg	N	N	1/min	Nm	
11	**4750**	**1.1**	133.0	**BF70Z-../DSE11LA4**	258	16100	47700	13	4000	1.3
9.3	**5600**	**0.93**	154.0	"	"	16100	47700	11.5	4550	1.15
8.0	**6500**	**0.8**	179.7	"	"	16100	47700	9.6	5400	0.96
17.5	**3000**	**3.2**	83.16	**BF80-../DSE11LA4**	328	18400	65100	21	2500	3.8
15.5	**3350**	**2.8**	94.38	"	"	20300	68500	18.5	2800	3.4
13.5	**3850**	**2.5**	107.9	"	"	22400	72300	16	3250	2.9
12	**4350**	**2.2**	122.4	"	"	24500	75000	14	3750	2.5
10.5	**5000**	**1.9**	139.7	"	"	26700	75000	12.5	4200	2.3
9.0	**5800**	**1.65**	158.5	"	"	29000	75000	11	4750	2.0
7.7	**6800**	**1.4**	184.5	"	"	31800	75000	9.3	5600	1.7
6.8	**7700**	**1.25**	209.4	"	"	34300	75000	8.2	6400	1.5
6.0	**8700**	**1.1**	237.1	"	"	36900	75000	7.3	7100	1.35
5.3	**9900**	**0.96**	269.1	"	"	39600	75000	6.4	8200	1.15
4.9	**10700**	**0.98**	291.7	**BF80Z-../DSE11LA4**	375	39600	75000	5.9	8900	1.2
4.1	**12800**	**0.82**	347.3	"	"	39600	75000	5.0	10500	1.0
9.2	**5700**	**2.9**	154.8	**BF90-../DSE11LA4**	581	30100	100800	11.5	4550	3.7
8.0	**6500**	**2.6**	178.6	"	"	33400	106700	9.6	5400	3.1
7.2	**7200**	**2.3**	198.8	"	"	36000	111300	8.7	6000	2.8
6.2	**8400**	**2.0**	232.6	"	"	39900	118300	7.4	7000	2.4
5.5	**9500**	**1.75**	259.0	"	"	42800	120000	6.7	7800	2.2
5.3	**9900**	**1.85**	269.8	**BF90Z-../DSE11LA4**	641	42800	120000	6.4	8200	2.3
4.8	**10900**	**1.7**	300.4	"	"	42800	120000	5.7	9200	2.0
4.2	**12500**	**1.5**	343.6	"	"	42800	120000	5.0	10500	1.75
3.8	**13800**	**1.35**	382.6	"	"	42800	120000	4.5	11600	1.6
3.2	**16400**	**1.15**	456.7	"	"	42800	120000	3.8	13800	1.35
2.8	**18700**	**0.99**	508.5	"	"	42800	120000	3.4	15400	1.2
2.5	**21000**	**0.88**	591.1	"	"	42800	120000	2.9	18100	1.0

P = 7.5 kW

50 Hz			i	Type	m	F_{RN}	F_{RV}	60 Hz		
n_2	M_2	f_B						n_2	M_2	f_B
1/min	Nm				kg	N	N	1/min	Nm	
270	**265**	**1.9**	5.38	**BF50-../DSE13MA4**	133	4500	-	325	220	2.3
187	**380**	**1.5**	7.71	"	"	5100	-	230	310	1.8
135	**530**	**1.3**	10.68	"	"	5600	-	163	435	1.55
99	**720**	**1.1**	14.65	"	"	6100	-	119	600	1.3
87	**820**	**1.15**	16.70	"	"	6200	-	105	680	1.4
78	**910**	**1.1**	18.68	"	"	6400	-	94	760	1.3
63	**1130**	**0.98**	23.14	"	"	6800	-	76	940	1.2
56	**1270**	**0.92**	25.88	"	"	7100	-	68	1050	1.1
45.5	**1570**	**0.81**	31.73	"	"	7500	-	55	1300	0.98
280	**255**	**3.0**	5.22	**BF60-../DSE13MA4**	166	5200	14800	335	210	3.6
187	**380**	**2.3**	7.74	"	"	6000	16900	225	315	2.8
140	**510**	**2.0**	10.31	"	"	6500	18400	169	420	2.4
102	**700**	**1.7**	14.24	"	"	7100	20000	123	580	2.1
85	**840**	**1.75**	16.96	"	"	7300	20600	103	690	2.1
77	**930**	**1.65**	18.81	"	"	7600	21500	93	770	2.0
64	**1110**	**1.5**	22.58	"	"	8000	22600	78	910	1.8
58	**1230**	**1.4**	25.05	"	"	8200	23200	70	1020	1.7
46.5	**1540**	**1.25**	31.20	"	"	8800	24900	56	1270	1.5
42	**1700**	**1.15**	34.62	"	"	9100	25700	51	1400	1.4
35	**2000**	**1.05**	41.60	"	"	9600	27100	42	1700	1.25
31.5	**2250**	**0.99**	46.16	"	"	9900	28000	38	1880	1.2
26.5	**2700**	**0.85**	54.44	"	"	10500	29700	32	2200	1.05
45.5	**1570**	**3.3**	31.84	**BF70-../DSE13MA4**	245	7700	30000	55	1300	4.0
39.5	**1810**	**2.9**	36.88	"	"	7900	31100	47.5	1500	3.5
33.5	**2100**	**2.5**	43.02	"	"	8700	32800	40.5	1760	3.0

P = 7.5 kW

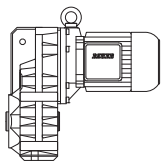

50 Hz			i	Type	m	F_{RN}	F_{RV}	60 Hz		
n_2	M_2	f_B						n_2	M_2	f_B
1/min	Nm				kg	N	N	1/min	Nm	
30.5	**2300**	**2.3**	47.82	**BF70-../DSE13MA4**	"	9100	34000	36.5	1960	2.7
26	**2750**	**1.9**	55.79	"	"	10200	36000	31.5	2250	2.3
23.5	**3000**	**1.75**	61.94	"	"	10800	37400	28.5	2500	2.1
20	**3550**	**1.45**	72.26	"	"	12000	39600	24.5	2900	1.8
18	**3950**	**1.3**	81.82	"	"	12800	41300	21.5	3300	1.6
15.5	**4600**	**1.15**	95.46	"	"	14000	43700	18.5	3850	1.35
14	**5100**	**1.0**	105.2	"	"	14700	45100	17	4200	1.25
12	**5900**	**0.88**	122.7	"	"	16100	47700	14.5	4900	1.05
11	**6500**	**0.8**	133.0	**BF70Z-../DSE13MA4**	270	16100	47700	13.5	5300	0.98
23.5	**3000**	**3.1**	61.55	**BF80-../DSE13MA4**	341	14800	58100	28.5	2500	3.7
21	**3400**	**2.8**	69.86	"	"	15900	60600	25	2850	3.3
17.5	**4050**	**2.3**	83.16	"	"	18400	65100	21	3400	2.8
15.5	**4600**	**2.1**	94.38	"	"	20300	68500	18.5	3850	2.5
13.5	**5300**	**1.8**	107.9	"	"	22400	72300	16.5	4300	2.2
12	**5900**	**1.6**	122.4	"	"	24500	75000	14.5	4900	1.95
10.5	**6800**	**1.4**	139.7	"	"	26700	75000	12.5	5700	1.65
9.1	**7800**	**1.2**	158.5	"	"	29000	75000	11	6500	1.45
7.9	**9000**	**1.05**	184.5	"	"	31800	75000	9.5	7500	1.25
6.9	**10300**	**0.92**	209.4	"	"	34300	75000	8.4	8500	1.1
6.1	**11700**	**0.81**	237.1	"	"	36900	75000	7.4	9600	0.99
13.5	**5300**	**3.2**	107.5	**BF90-../DSE13MA4**	593	22300	86900	16.5	4300	3.9
12.5	**5700**	**2.9**	119.7	"	"	24500	90800	15	4750	3.5
10.5	**6800**	**2.5**	139.1	"	"	27700	96300	13	5500	3.1
9.4	**7600**	**2.2**	154.8	"	"	30100	100800	11.5	6200	2.7
8.1	**8800**	**1.9**	178.6	"	"	33400	106700	9.8	7300	2.3
7.3	**9800**	**1.7**	198.8	"	"	36000	111300	8.8	8100	2.1
6.2	**11500**	**1.45**	232.6	"	"	39900	118300	7.5	9500	1.75
5.6	**12700**	**1.3**	259.0	"	"	42800	120000	6.8	10500	1.6
5.4	**13200**	**1.4**	269.8	**BF90Z-../DSE13MA4**	654	42800	120000	6.5	11000	1.7
4.8	**14900**	**1.25**	300.4	"	"	42800	120000	5.8	12300	1.5
4.2	**17000**	**1.1**	343.6	"	"	42800	120000	5.1	14000	1.3
3.8	**18800**	**0.98**	382.6	"	"	42800	120000	4.6	15500	1.2
3.2	**22300**	**0.83**	456.7	"	"	42800	120000	3.9	18300	1.0

P = 9.5 kW

50 Hz			i	Type	m	F_{RN}	F_{RV}	60 Hz		
n_2	M_2	f_B						n_2	M_2	f_B
1/min	Nm				kg	N	N	1/min	Nm	
270	**335**	**1.5**	5.38	**BF50-../DSE13LA4**	136	4500	-	325	275	1.8
187	**485**	**1.15**	7.71	"	"	5100	-	230	390	1.45
135	**670**	**1.0**	10.68	"	"	5600	-	163	550	1.25
99	**910**	**0.87**	14.65	"	"	6100	-	119	760	1.05
87	**1040**	**0.91**	16.70	"	"	6200	-	105	860	1.1
78	**1160**	**0.86**	18.68	"	"	6400	-	94	960	1.05
280	**320**	**2.4**	5.22	**BF60-../DSE13LA4**	169	5200	14800	335	270	2.8
187	**485**	**1.8**	7.74	"	"	6000	16900	225	400	2.2
140	**640**	**1.6**	10.31	"	"	6500	18400	169	530	1.9
102	**880**	**1.35**	14.24	"	"	7100	20000	123	730	1.65
85	**1060**	**1.35**	16.96	"	"	7300	20600	103	880	1.65
77	**1170**	**1.3**	18.81	"	"	7600	21500	93	970	1.55
64	**1410**	**1.15**	22.58	"	"	8000	22600	78	1160	1.45
58	**1560**	**1.1**	25.05	"	"	8200	23200	70	1290	1.35
46.5	**1950**	**0.97**	31.20	"	"	8800	24900	56	1620	1.15
42	**2150**	**0.92**	34.62	"	"	9100	25700	51	1770	1.1
35	**2550**	**0.84**	41.60	"	"	9600	27100	42	2150	0.99
59	**1530**	**3.3**	24.55	**BF70-../DSE13LA4**	248	7000	27700	71	1270	4.0
53	**1710**	**3.0**	27.29	"	"	7000	28400	64	1410	3.7

P = 9.5 kW

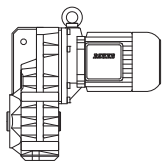

50 Hz			i	Type	m	F_{RN}	F_{RV}	60 Hz		
n_2	M_2	f_B						n_2	M_2	f_B
1/min	Nm				kg	N	N	1/min	Nm	
45.5	**1990**	**2.6**	31.84	**BF70-../DSE13LA4**	"	7700	30000	55	1640	3.2
39.5	**2250**	**2.3**	36.88	"	"	7900	31100	47.5	1910	2.7
33.5	**2700**	**1.95**	43.02	"	"	8700	32800	40.5	2200	2.4
30.5	**2950**	**1.75**	47.82	"	"	9100	34000	36.5	2450	2.1
26	**3450**	**1.5**	55.79	"	"	10200	36000	31.5	2850	1.8
23.5	**3850**	**1.35**	61.94	"	"	10800	37400	28.5	3150	1.65
20	**4500**	**1.15**	72.26	"	"	12000	39600	24.5	3700	1.4
18	**5000**	**1.05**	81.82	"	"	12800	41300	21.5	4200	1.25
15.5	**5800**	**0.9**	95.46	"	"	14000	43700	18.5	4900	1.05
14	**6400**	**0.81**	105.2	"	"	14700	45100	17	5300	0.98
30.5	**2950**	**2.9**	47.46	**BF80-../DSE13LA4**	344	13400	53700	37	2450	3.5
27	**3350**	**2.7**	53.86	"	"	14000	55800	32.5	2750	3.3
23.5	**3850**	**2.4**	61.55	"	"	14800	58100	28.5	3150	3.0
21	**4300**	**2.2**	69.86	"	"	15900	60600	25	3600	2.6
17.5	**5100**	**1.85**	83.16	"	"	18400	65100	21	4300	2.2
15.5	**5800**	**1.65**	94.38	"	"	20300	68500	18.5	4900	1.95
13.5	**6700**	**1.4**	107.9	"	"	22400	72300	16.5	5400	1.75
12	**7500**	**1.25**	122.4	"	"	24500	75000	14.5	6200	1.55
10.5	**8600**	**1.1**	139.7	"	"	26700	75000	12.5	7200	1.3
9.1	**9900**	**0.96**	158.5	"	"	29000	75000	11	8200	1.15
7.9	**11400**	**0.83**	184.5	"	"	31800	75000	9.5	9500	1.0
18	**5000**	**3.3**	80.85	**BF90-../DSE13LA4**	596	17500	77500	22	4100	4.0
16	**5600**	**3.0**	90.02	"	"	18900	80600	19.5	4650	3.6
13.5	**6700**	**2.5**	107.5	"	"	22300	86900	16.5	5400	3.1
12.5	**7200**	**2.3**	119.7	"	"	24500	90800	15	6000	2.8
10.5	**8600**	**1.95**	139.1	"	"	27700	96300	13	6900	2.4
9.4	**9600**	**1.75**	154.8	"	"	30100	100800	11.5	7800	2.2
8.1	**11200**	**1.5**	178.6	"	"	33400	106700	9.8	9200	1.85
7.3	**12400**	**1.35**	198.8	"	"	36000	111300	8.8	10300	1.65
6.2	**14600**	**1.15**	232.6	"	"	39900	118300	7.5	12000	1.4
5.6	**16200**	**1.05**	259.0	"	"	42800	120000	6.8	13300	1.25
5.4	**16800**	**1.1**	269.8	**BF90Z-../DSE13LA4**	657	42800	120000	6.5	13900	1.35
4.8	**18900**	**0.98**	300.4	"	"	42800	120000	5.8	15600	1.2
4.2	**21600**	**0.86**	343.6	"	"	42800	120000	5.1	17700	1.05

P = 11 kW

50 Hz			i	Type	m	F_{RN}	F_{RV}	60 Hz		
n_2	M_2	f_B						n_2	M_2	f_B
1/min	Nm				kg	N	N	1/min	Nm	
275	**380**	**1.3**	5.38	**BF50-../DSE16MA4**	181	4500	-	330	315	1.6
190	**550**	**1.05**	7.71	"	"	5100	-	230	455	1.25
137	**760**	**0.89**	10.68	"	"	5600	-	165	630	1.05
88	**1190**	**0.8**	16.70	"	"	6200	-	106	990	0.96
280	**375**	**2.0**	5.22	**BF60-../DSE16MA4**	214	5200	14800	340	305	2.5
189	**550**	**1.6**	7.74	"	"	6000	16900	230	455	1.9
142	**730**	**1.4**	10.31	"	"	6500	18400	171	610	1.65
103	**1010**	**1.2**	14.24	"	"	7100	20000	124	840	1.4
87	**1200**	**1.2**	16.96	"	"	7300	20600	104	1010	1.45
78	**1340**	**1.15**	18.81	"	"	7600	21500	94	1110	1.35
65	**1610**	**1.05**	22.58	"	"	8000	22600	78	1340	1.25
59	**1780**	**0.97**	25.05	"	"	8200	23200	71	1470	1.2
47	**2200**	**0.86**	31.20	"	"	8800	24900	57	1840	1.05
42.5	**2450**	**0.81**	34.62	"	"	9100	25700	51	2050	0.97
70	**1500**	**3.1**	21.04	**BF70-../DSE16MA4**	297	6400	26300	84	1250	3.7
60	**1750**	**2.9**	24.55	"	"	7000	27700	72	1450	3.5
54	**1940**	**2.7**	27.29	"	"	7000	28400	65	1610	3.2
46	**2250**	**2.3**	31.84	"	"	7700	30000	56	1870	2.8
40	**2600**	**2.0**	36.88	"	"	7900	31100	48	2150	2.4

P = 11 kW

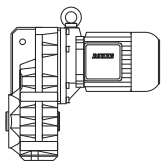

50 Hz			i	Type	m	F_{RN}	F_{RV}	60 Hz		
n_2	M_2	f_B						n_2	M_2	f_B
1/min	Nm				kg	N	N	1/min	Nm	
34	**3050**	**1.7**	43.02	**BF70-../DSE16MA4**	"	8700	32800	41	2550	2.0
31	**3350**	**1.55**	47.82	"	"	9100	34000	37	2800	1.85
26.5	**3950**	**1.3**	55.79	"	"	10200	36000	32	3250	1.6
24	**4350**	**1.2**	61.94	"	"	10800	37400	28.5	3650	1.4
20.5	**5100**	**1.0**	72.26	"	"	12000	39600	24.5	4250	1.2
18	**5800**	**0.9**	81.82	"	"	12800	41300	22	4750	1.1
48.5	**2150**	**3.3**	30.21	**BF80-../DSE16MA4**	393	12300	47900	59	1780	4.0
43.5	**2400**	**3.2**	33.61	"	"	11700	48400	53	1980	3.9
38.5	**2700**	**3.0**	38.14	"	"	12200	50300	46.5	2250	3.6
31	**3350**	**2.6**	47.46	"	"	13400	53700	37.5	2800	3.1
27.5	**3800**	**2.4**	53.86	"	"	14000	55800	33	3150	2.8
24	**4350**	**2.1**	61.55	"	"	14800	58100	29	3600	2.6
21	**5000**	**1.9**	69.86	"	"	15900	60600	25.5	4100	2.3
18	**5800**	**1.65**	83.16	"	"	18400	65100	21.5	4850	1.95
15.5	**6700**	**1.4**	94.38	"	"	20300	68500	19	5500	1.75
14	**7500**	**1.25**	107.9	"	"	22400	72300	16.5	6300	1.5
12	**8700**	**1.1**	122.4	"	"	24500	75000	14.5	7200	1.3
10.5	**10000**	**0.95**	139.7	"	"	26700	75000	13	8000	1.2
9.3	**11200**	**0.85**	158.5	"	"	29000	75000	11.5	9100	1.05
21	**5000**	**3.2**	70.69	**BF90-../DSE16MA4**	640	16800	74700	25	4200	3.8
18.5	**5600**	**3.0**	80.85	"	"	17500	77500	22	4750	3.5
16.5	**6300**	**2.7**	90.02	"	"	18900	80600	20	5200	3.2
14	**7500**	**2.2**	107.5	"	"	22300	86900	16.5	6300	2.7
12.5	**8400**	**2.0**	119.7	"	"	24500	90800	15	7000	2.4
10.5	**10000**	**1.7**	139.1	"	"	27700	96300	13	8000	2.1
9.5	**11000**	**1.55**	154.8	"	"	30100	100800	11.5	9100	1.85
8.2	**12800**	**1.3**	178.6	"	"	33400	106700	9.9	10600	1.6
7.4	**14100**	**1.2**	198.8	"	"	36000	111300	8.9	11800	1.4
6.3	**16600**	**1.0**	232.6	"	"	39900	118300	7.6	13800	1.2
5.7	**18400**	**0.91**	259.0	"	"	42800	120000	6.8	15400	1.1
5.5	**19100**	**0.97**	269.8	**BF90Z-../DSE16MA4**	702	42800	120000	6.6	15900	1.15
4.9	**21400**	**0.86**	300.4	"	"	42800	120000	5.9	17800	1.05

P = 15 kW

50 Hz			i	Type	m	F_{RN}	F_{RV}	60 Hz		
n_2	M_2	f_B						n_2	M_2	f_B
1/min	Nm				kg	N	N	1/min	Nm	
275	**520**	**0.96**	5.38	**BF50-../DSE16LA4**	194	4500	-	330	430	1.15
280	**510**	**1.5**	5.22	**BF60-../DSE16LA4**	227	5200	14800	340	420	1.8
189	**750**	**1.15**	7.74	"	"	6000	16900	230	620	1.4
142	**1000**	**1.0**	10.31	"	"	6500	18400	171	830	1.2
103	**1390**	**0.86**	14.24	"	"	7100	20000	124	1150	1.05
87	**1640**	**0.88**	16.96	"	"	7300	20600	104	1370	1.05
78	**1830**	**0.83**	18.81	"	"	7600	21500	94	1520	1.0
98	**1460**	**2.5**	14.90	**BF70-../DSE16LA4**	310	5900	24000	119	1200	3.0
84	**1700**	**2.5**	17.39	"	"	6200	25000	102	1400	3.0
70	**2000**	**2.3**	21.04	"	"	6400	26300	84	1700	2.7
60	**2350**	**2.1**	24.55	"	"	7000	27700	72	1980	2.5
54	**2650**	**1.95**	27.29	"	"	7000	28400	65	2200	2.4
46	**3100**	**1.7**	31.84	"	"	7700	30000	56	2550	2.0
40	**3550**	**1.45**	36.88	"	"	7900	31100	48	2950	1.75
34	**4200**	**1.25**	43.02	"	"	8700	32800	41	3450	1.5
31	**4600**	**1.15**	47.82	"	"	9100	34000	37	3850	1.35
26.5	**5400**	**0.96**	55.79	"	"	10200	36000	32	4450	1.15
24	**5900**	**0.88**	61.94	"	"	10800	37400	28.5	5000	1.05

P = 15 kW

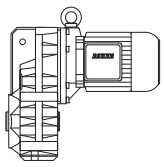

50 Hz			i	Type	m	F_{RN}	F_{RV}	60 Hz		
n_2	M_2	f_B						n_2	M_2	f_B
1/min	Nm				kg	N	N	1/min	Nm	
89	**1600**	**3.3**	16.49	**BF80-../DSE16LA4**	406	11400	41400	107	1330	4.0
63	**2250**	**2.8**	23.29	"	"	11800	44900	76	1880	3.4
48.5	**2950**	**2.4**	30.21	"	"	12300	47900	59	2400	3.0
43.5	**3250**	**2.4**	33.61	"	"	11700	48400	53	2700	2.9
38.5	**3700**	**2.2**	38.14	"	"	12200	50300	46.5	3050	2.6
31	**4600**	**1.85**	47.46	"	"	13400	53700	37.5	3800	2.3
27.5	**5200**	**1.7**	53.86	"	"	14000	55800	33	4300	2.1
24	**5900**	**1.6**	61.55	"	"	14800	58100	29	4900	1.9
21	**6800**	**1.4**	69.86	"	"	15900	60600	25.5	5600	1.7
18	**7900**	**1.2**	83.16	"	"	18400	65100	21.5	6600	1.45
15.5	**9200**	**1.05**	94.38	"	"	20300	68500	19	7500	1.25
14	**10200**	**0.93**	107.9	"	"	22400	72300	16.5	8600	1.1
12	**11900**	**0.8**	122.4	"	"	24500	75000	14.5	9800	0.97
31.5	**4500**	**3.1**	46.43	**BF90-../DSE16LA4**	654	13800	65500	38	3750	3.8
28.5	**5000**	**2.9**	51.70	"	"	14600	67800	34.5	4150	3.5
23	**6200**	**2.5**	63.49	"	"	15800	72000	28	5100	3.0
21	**6800**	**2.3**	70.69	"	"	16800	74700	25	5700	2.8
18.5	**7700**	**2.1**	80.85	"	"	17500	77500	22	6500	2.5
16.5	**8600**	**1.95**	90.02	"	"	18900	80600	20	7100	2.4
14	**10200**	**1.65**	107.5	"	"	22300	86900	16.5	8600	1.95
12.5	**11400**	**1.45**	119.7	"	"	24500	90800	15	9500	1.75
10.5	**13600**	**1.25**	139.1	"	"	27700	96300	13	11000	1.55
9.5	**15000**	**1.1**	154.8	"	"	30100	100800	11.5	12400	1.35
8.2	**17400**	**0.97**	178.6	"	"	33400	106700	9.9	14400	1.15
7.4	**19300**	**0.87**	198.8	"	"	36000	111300	8.9	16000	1.05

P = 18.5 kW

50 Hz			i	Type	m	F_{RN}	F_{RV}	60 Hz		
n_2	M_2	f_B						n_2	M_2	f_B
1/min	Nm				kg	N	N	1/min	Nm	
280	**630**	**1.2**	5.22	**BF60-../DSE16XA4**	237	5200	14800	340	510	1.5
189	**930**	**0.93**	7.74	"	"	6000	16900	230	760	1.15
142	**1240**	**0.82**	10.31	"	"	6500	18400	171	1030	0.98
98	**1800**	**2.0**	14.90	**BF70-../DSE16XA4**	320	5900	24000	119	1480	2.5
84	**2100**	**2.0**	17.39	"	"	6200	25000	102	1730	2.5
70	**2500**	**1.85**	21.04	"	"	6400	26300	84	2100	2.2
60	**2900**	**1.75**	24.55	"	"	7000	27700	72	2450	2.1
54	**3250**	**1.6**	27.29	"	"	7000	28400	65	2700	1.95
46	**3800**	**1.35**	31.84	"	"	7700	30000	56	3150	1.65
40	**4400**	**1.2**	36.88	"	"	7900	31100	48	3650	1.4
34	**5100**	**1.0**	43.02	"	"	8700	32800	41	4300	1.2
31	**5600**	**0.93**	47.82	"	"	9100	34000	37	4750	1.1
89	**1980**	**2.7**	16.49	**BF80-../DSE16XA4**	416	11400	41400	107	1650	3.2
63	**2800**	**2.3**	23.29	"	"	11800	44900	76	2300	2.7
48.5	**3600**	**2.0**	30.21	"	"	12300	47900	59	2950	2.4
43.5	**4050**	**1.9**	33.61	"	"	11700	48400	53	3300	2.4
38.5	**4550**	**1.75**	38.14	"	"	12200	50300	46.5	3750	2.2
31	**5600**	**1.55**	47.46	"	"	13400	53700	37.5	4700	1.85
27.5	**6400**	**1.4**	53.86	"	"	14000	55800	33	5300	1.7
24	**7300**	**1.25**	61.55	"	"	14800	58100	29	6000	1.55
21	**8400**	**1.15**	69.86	"	"	15900	60600	25.5	6900	1.4
18	**9800**	**0.97**	83.16	"	"	18400	65100	21.5	8200	1.15
15.5	**11300**	**0.84**	94.38	"	"	20300	68500	19	9200	1.05
31.5	**5600**	**2.5**	46.43	**BF90-../DSE16XA4**	664	13800	65500	38	4600	3.1
28.5	**6100**	**2.4**	51.70	"	"	14600	67800	34.5	5100	2.8
23	**7600**	**2.0**	63.49	"	"	15800	72000	28	6300	2.4
21	**8400**	**1.9**	70.69	"	"	16800	74700	25	7000	2.3

P = 18.5 kW

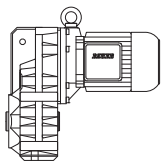

50 Hz			i	Type	m	F_{RN}	F_{RV}	60 Hz		
n_2	M_2	f_B						n_2	M_2	f_B
1/min	Nm				kg	N	N	1/min	Nm	
18.5	**9500**	**1.75**	80.85	**BF90-../DSE16XA4**	"	17500	77500	22	8000	2.1
16.5	**10700**	**1.55**	90.02	"	"	18900	80600	20	8800	1.9
14	**12600**	**1.35**	107.5	"	"	22300	86900	16.5	10700	1.55
12.5	**14100**	**1.2**	119.7	"	"	24500	90800	15	11700	1.45
10.5	**16800**	**1.0**	139.1	"	"	27700	96300	13	13500	1.25
9.5	**18500**	**0.91**	154.8	"	"	30100	100800	11.5	15300	1.1

P = 22 kW

50 Hz			i	Type	m	F_{RN}	F_{RV}	60 Hz		
n_2	M_2	f_B						n_2	M_2	f_B
1/min	Nm				kg	N	N	1/min	Nm	
280	**750**	**1.0**	5.22	**BF60-../DSE18LA4**	300	5200	14800	340	610	1.25
142	**1470**	**1.7**	10.32	**BF70-../DSE18LA4**	377	4600	18700	171	1220	2.1
122	**1720**	**1.7**	12.04	"	"	4900	19700	147	1420	2.1
98	**2100**	**1.75**	14.90	"	"	5900	24000	119	1760	2.1
84	**2500**	**1.7**	17.39	"	"	6200	25000	102	2050	2.1
70	**3000**	**1.55**	21.04	"	"	6400	26300	84	2500	1.85
60	**3500**	**1.45**	24.55	"	"	7000	27700	72	2900	1.75
54	**3850**	**1.35**	27.29	"	"	7000	28400	65	3200	1.65
46	**4550**	**1.15**	31.84	"	"	7700	30000	56	3750	1.4
40	**5200**	**1.0**	36.88	"	"	7900	31100	48	4350	1.2
34	**6100**	**0.85**	43.02	"	"	8700	32800	41	5100	1.0
128	**1640**	**2.2**	11.42	**BF80-../DSE18LA4**	473	8900	32200	155	1350	2.7
89	**2350**	**2.3**	16.49	"	"	11400	41400	107	1960	2.7
63	**3300**	**1.9**	23.29	"	"	11800	44900	76	2750	2.3
48.5	**4300**	**1.65**	30.21	"	"	12300	47900	59	3550	2.0
43.5	**4800**	**1.6**	33.61	"	"	11700	48400	53	3950	1.95
38.5	**5400**	**1.5**	38.14	"	"	12200	50300	46.5	4500	1.8
31	**6700**	**1.3**	47.46	"	"	13400	53700	37.5	5600	1.55
27.5	**7600**	**1.2**	53.86	"	"	14000	55800	33	6300	1.4
24	**8700**	**1.05**	61.55	"	"	14800	58100	29	7200	1.3
21	**10000**	**0.95**	69.86	"	"	15900	60600	25.5	8200	1.15
18	**11600**	**0.82**	83.16	"	"	18400	65100	21.5	9700	0.98
61	**3400**	**3.3**	23.95	**BF90-../DSE18LA4**	725	11100	54300	74	2800	4.0
43.5	**4800**	**2.7**	33.71	"	"	11900	59300	53	3950	3.3
39	**5300**	**2.5**	37.54	"	"	12700	61500	47	4450	3.0
31.5	**6600**	**2.1**	46.43	"	"	13800	65500	38	5500	2.6
28.5	**7300**	**2.0**	51.70	"	"	14600	67800	34.5	6000	2.4
23	**9100**	**1.7**	63.49	"	"	15800	72000	28	7500	2.1
21	**10000**	**1.6**	70.69	"	"	16800	74700	25	8400	1.9
18.5	**11300**	**1.45**	80.85	"	"	17500	77500	22	9500	1.75
16.5	**12700**	**1.3**	90.02	"	"	18900	80600	20	10500	1.6
14	**15000**	**1.1**	107.5	"	"	22300	86900	16.5	12700	1.3
12.5	**16800**	**1.0**	119.7	"	"	24500	90800	15	14000	1.2
10.5	**20000**	**0.84**	139.1	"	"	27700	96300	13	16100	1.05

P = 30 kW

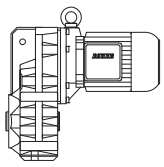

50 Hz			i	Type	m	F_{RN}	F_{RV}	60 Hz		
n_2	M_2	f_B						n_2	M_2	f_B
1/min	Nm				kg	N	N	1/min	Nm	
142	**2000**	**1.25**	10.32	**BF70-../DSE18XA4**	395	4600	18700	171	1670	1.5
122	**2300**	**1.3**	12.04	"	"	4900	19700	147	1940	1.5
98	**2900**	**1.25**	14.90	"	"	5900	24000	119	2400	1.5
84	**3400**	**1.25**	17.39	"	"	6200	25000	102	2800	1.5
70	**4050**	**1.15**	21.04	"	"	6400	26300	84	3400	1.35
60	**4750**	**1.05**	24.55	"	"	7000	27700	72	3950	1.25
54	**5300**	**0.98**	27.29	"	"	7000	28400	65	4400	1.2
46	**6200**	**0.84**	31.84	"	"	7700	30000	56	5100	1.0
128	**2200**	**1.65**	11.42	**BF80-../DSE18XA4**	491	8900	32200	155	1840	2.0
89	**3200**	**1.65**	16.49	"	"	11400	41400	107	2650	2.0
63	**4500**	**1.4**	23.29	"	"	11800	44900	76	3750	1.7
48.5	**5900**	**1.2**	30.21	"	"	12300	47900	59	4850	1.45
43.5	**6500**	**1.2**	33.61	"	"	11700	48400	53	5400	1.45
38.5	**7400**	**1.1**	38.14	"	"	12200	50300	46.5	6100	1.3
31	**9200**	**0.94**	47.46	"	"	13400	53700	37.5	7600	1.15
27.5	**10400**	**0.86**	53.86	"	"	14000	55800	33	8600	1.05
118	**2400**	**3.0**	12.45	**BF90-../DSE18XA4**	743	8000	39700	142	2000	3.6
84	**3400**	**3.0**	17.39	"	"	10000	49500	102	2800	3.6
61	**4650**	**2.4**	23.95	"	"	11100	54300	74	3850	2.9
43.5	**6500**	**2.0**	33.71	"	"	11900	59300	53	5400	2.4
39	**7300**	**1.8**	37.54	"	"	12700	61500	47	6000	2.2
31.5	**9000**	**1.55**	46.43	"	"	13800	65500	38	7500	1.9
28.5	**10000**	**1.45**	51.70	"	"	14600	67800	34.5	8300	1.75
23	**12400**	**1.25**	63.49	"	"	15800	72000	28	10200	1.5
21	**13600**	**1.15**	70.69	"	"	16800	74700	25	11400	1.4
18.5	**15400**	**1.05**	80.85	"	"	17500	77500	22	13000	1.25
16.5	**17300**	**0.97**	90.02	"	"	18900	80600	20	14300	1.15
14	**20400**	**0.82**	107.5	"	"	22300	86900	16.5	17300	0.97

P = 37 kW

50 Hz			i	Type	m	F_{RN}	F_{RV}	60 Hz		
n_2	M_2	f_B						n_2	M_2	f_B
1/min	Nm				kg	N	N	1/min	Nm	
144	**2450**	**1.05**	10.32	**BF70-..-C/DHENF22SG4**	694	4600	18700	174	2000	1.25
123	**2850**	**1.05**	12.04	"	"	4900	19700	149	2350	1.25
100	**3500**	**1.05**	14.90	"	"	5900	24000	121	2900	1.25
86	**4100**	**1.05**	17.39	"	"	6200	25000	103	3400	1.25
130	**2700**	**1.35**	11.42	**BF80-..-C/DHENF22SG4**	790	8900	32200	157	2250	1.65
90	**3900**	**1.35**	16.49	"	"	11400	41400	109	3200	1.65
64	**5500**	**1.15**	23.29	"	"	11800	44900	77	4550	1.4
119	**2950**	**2.4**	12.45	**BF90-..-C/DHENF22SG4**	1048	8000	39700	144	2450	2.9
86	**4100**	**2.5**	17.39	"	"	10000	49500	103	3400	3.0
62	**5600**	**2.0**	23.95	"	"	11100	54300	75	4700	2.4
44	**8000**	**1.6**	33.71	"	"	11900	59300	54	6500	2.0
39.5	**8900**	**1.5**	37.54	"	"	12700	61500	48	7300	1.8
32	**11000**	**1.3**	46.43	"	"	13800	65500	39	9000	1.55
29	**12100**	**1.2**	51.70	"	"	14600	67800	35	10000	1.45
23.5	**15000**	**1.05**	63.49	"	"	15800	72000	28.5	12300	1.25

P = 45 kW

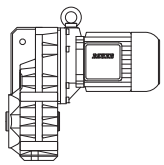

50 Hz			i	Type	m	F_{RN}	F_{RV}	60 Hz		
n_2	M_2	f_B						n_2	M_2	f_B
1/min	Nm				kg	N	N	1/min	Nm	
130	**3300**	**1.1**	11.42	**BF80-..-C/DHENF22MG4**	830	8900	32200	157	2700	1.35
90	**4750**	**1.1**	16.49	"	"	11400	41400	109	3900	1.35
119	**3600**	**2.0**	12.45	**BF90-..-C/DHENF22MG4**	1088	8000	39700	144	2950	2.4
86	**4950**	**2.0**	17.39	"	"	10000	49500	103	4150	2.4
62	**6900**	**1.65**	23.95	"	"	11100	54300	75	5700	1.95
44	**9700**	**1.35**	33.71	"	"	11900	59300	54	7900	1.65
39.5	**10800**	**1.2**	37.54	"	"	12700	61500	48	8900	1.5
32	**13400**	**1.05**	46.43	"	"	13800	65500	39	11000	1.3

P = 55 kW

50 Hz			i	Type	m	F_{RN}	F_{RV}	60 Hz		
n_2	M_2	f_B						n_2	M_2	f_B
1/min	Nm				kg	N	N	1/min	Nm	
119	**4400**	**1.65**	12.45	**BF90-..-C/DHENF25SG4**	1144	8000	39700	144	3600	2.0
86	**6100**	**1.65**	17.39	"	"	10000	49500	103	5000	2.0
62	**8400**	**1.35**	23.95	"	"	11100	54300	75	7000	1.6
44	**11900**	**1.1**	33.71	"	"	11900	59300	54	9700	1.35
39.5	**13200**	**1.0**	37.54	"	"	12700	61500	48	10900	1.2

P = 75 kW

50 Hz			i	Type	m	F_{RN}	F_{RV}	60 Hz		
n_2	M_2	f_B						n_2	M_2	f_B
1/min	Nm				kg	N	N	1/min	Nm	
119	**6000**	**1.2**	12.45	**BF90-..-C/DHENF25MG4**	1144	8000	39700	144	4950	1.45
86	**8300**	**1.2**	17.39	"	"	10000	49500	103	6900	1.45

P = 0.03 kW

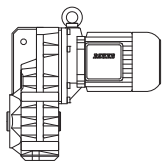

50 Hz			i	Type	m	F_{RN}	F_{RV}	60 Hz		
n_2	M_2	f_B						n_2	M_2	f_B
1/min	Nm				kg	N	N	1/min	Nm	
9.0	**31.5**	**7.6**	151.2	**BF10Z-../D04LA4**	21	6400	-	11	26	9.2
8.2	**34.5**	**7.0**	166.2	"	"	6400	-	9.8	29	8.3
7.5	**38**	**6.3**	180.1	"	"	6400	-	9.0	31.5	7.6
6.9	**41.5**	**5.8**	198.0	"	"	6400	-	8.2	34.5	7.0
6.3	**45**	**5.3**	214.5	"	"	6400	-	7.6	37.5	6.4
5.8	**49**	**4.9**	235.8	"	"	6400	-	6.9	41.5	5.8
5.3	**54**	**4.4**	257.4	"	"	6400	-	6.3	45	5.3
4.8	**59**	**4.1**	283.1	"	"	6400	-	5.8	49	4.9
4.2	**68**	**3.5**	324.3	"	"	6400	-	5.0	57	4.2
3.8	**75**	**3.2**	356.6	"	"	6400	-	4.6	62	3.9
3.6	**79**	**3.0**	380.2	"	"	6400	-	4.3	66	3.6
3.3	**86**	**2.8**	418.0	"	"	6400	-	3.9	73	3.3
2.9	**98**	**2.4**	469.5	"	"	6400	-	3.5	81	3.0
2.6	**110**	**2.2**	539.1	"	"	6400	-	3.1	92	2.6
2.3	**124**	**1.95**	592.8	"	"	6400	-	2.8	102	2.4
1.8	**97**	**2.7**	768.2	**BF10G06-../D04LA4**	25	6400	-	2.2	68	3.8
1.6	**110**	**2.4**	845.1	"	"	6400	-	2.0	75	3.5
1.4	**130**	**2.0**	994.0	"	"	6400	-	1.7	94	2.8
1.2	**159**	**1.65**	1190	"	"	6400	-	1.4	125	2.1
0.95	**210**	**1.25**	1452	"	"	6400	-	1.2	150	1.75
0.8	**260***	**1.0**	1744	"	"	6400	-	0.95	260	1.0
0.65	**260***	**1.0**	2096	"	"	6400	-	0.8	260	1.0
0.55	**260***	**1.0**	2467	"	"	6400	-	0.7	260	1.0
0.46	**260***	**1.0**	2952	"	"	6400	-	0.55	260	1.0
0.42	**260***	**1.0**	3220	"	"	6400	-	0.55	260	1.0
0.35	**260***	**1.0**	3942	"	"	6400	-	0.42	260	1.0
0.3	**260***	**1.0**	4569	"	"	6400	-	0.36	260	1.0
0.24	**260***	**1.0**	5709	"	"	6400	-	0.29	260	1.0
0.21	**260***	**1.0**	6550	"	"	6400	-	0.25	260	1.0
0.19	**260***	**1.0**	7144	"	"	6400	-	0.23	260	1.0
0.16	**260***	**1.0**	8681	"	"	6400	-	0.19	260	1.0
0.15	**260***	**1.0**	9471	"	"	6400	-	0.18	260	1.0
1.2	**162**	**2.8**	1140	**BF20G06-../D04LA4**	31	7900	-	1.5	114	4.0
1.0	**200**	**2.3**	1392	"	"	7900	-	1.2	154	3.0
0.9	**230**	**2.0**	1533	"	"	7900	-	1.1	173	2.7
0.8	**265**	**1.75**	1764	"	"	7900	-	0.95	210	2.2
0.65	**345**	**1.35**	2192	"	"	7900	-	0.75	285	1.6
0.55	**410**	**1.1**	2579	"	"	7900	-	0.65	330	1.4
0.48	**460***	**1.0**	2829	"	"	7900	-	0.6	460	1.0
0.44	**460***	**1.0**	3086	"	"	7900	-	0.55	460	1.0
0.36	**460***	**1.0**	3778	"	"	7900	-	0.43	460	1.0
0.31	**460***	**1.0**	4379	"	"	7900	-	0.37	460	1.0
0.25	**460***	**1.0**	5471	"	"	7900	-	0.3	460	1.0
0.2	**460***	**1.0**	6847	"	"	7900	-	0.24	460	1.0
0.17	**460***	**1.0**	8320	"	"	7900	-	0.2	460	1.0
0.15	**460***	**1.0**	9077	"	"	7900	-	0.18	460	1.0
1.0	**200**	**3.2**	1404	**BF30G06-../D04LA4**	41	7400	-	1.2	153	4.1
0.85	**245**	**2.6**	1686	"	"	7400	-	1.0	196	3.2
0.7	**315**	**2.0**	2026	"	"	7400	-	0.8	260	2.4
0.6	**370**	**1.7**	2386	"	"	7400	-	0.7	305	2.1
0.48	**485**	**1.3**	2854	"	"	7400	-	0.6	365	1.75
0.39	**610**	**1.05**	3493	"	"	7400	-	0.47	485	1.3
0.36	**630***	**1.0**	3811	"	"	7400	-	0.43	630	1.0
0.31	**630***	**1.0**	4417	"	"	7400	-	0.37	630	1.0
0.27	**630***	**1.0**	5060	"	"	7400	-	0.33	630	1.0
0.22	**630***	**1.0**	6333	"	"	7400	-	0.26	630	1.0
0.19	**630***	**1.0**	7206	"	"	7400	-	0.23	630	1.0
0.18	**630***	**1.0**	7861	"	"	7400	-	0.21	630	1.0
0.15	**630***	**1.0**	9157	"	"	7400	-	0.18	630	1.0

P = 0.04 kW

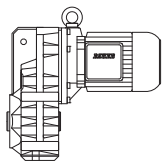

50 Hz			i	Type	m	F_{RN}	F_{RV}	60 Hz		
n_2	M_2	f_B						n_2	M_2	f_B
1/min	Nm				kg	N	N	1/min	Nm	
9.0	**42**	**5.7**	151.2	**BF10Z-../D04LA4**	21	6400	-	11	34.5	7.0
8.2	**46.5**	**5.2**	166.2	"	"	6400	-	9.8	38.5	6.2
7.5	**50**	**4.8**	180.1	"	"	6400	-	9.0	42	5.7
6.9	**55**	**4.4**	198.0	"	"	6400	-	8.2	46.5	5.2
6.3	**60**	**4.0**	214.5	"	"	6400	-	7.6	50	4.8
5.8	**65**	**3.7**	235.8	"	"	6400	-	6.9	55	4.4
5.3	**72**	**3.3**	257.4	"	"	6400	-	6.3	60	4.0
4.8	**79**	**3.0**	283.1	"	"	6400	-	5.8	65	3.7
4.2	**90**	**2.7**	324.3	"	"	6400	-	5.0	76	3.2
3.8	**100**	**2.4**	356.6	"	"	6400	-	4.6	83	2.9
3.6	**106**	**2.3**	380.2	"	"	6400	-	4.3	88	2.7
3.3	**115**	**2.1**	418.0	"	"	6400	-	3.9	97	2.5
2.9	**131**	**1.85**	469.5	"	"	6400	-	3.5	109	2.2
2.6	**146**	**1.65**	539.1	"	"	6400	-	3.1	123	1.95
2.3	**166**	**1.45**	592.8	"	"	6400	-	2.8	136	1.75
2.1	**119**	**2.2**	643.8	**BF10G06-../D04LA4**	25	6400	-	2.6	84	3.1
1.8	**150**	**1.75**	768.2	"	"	6400	-	2.2	111	2.3
1.6	**170**	**1.55**	845.1	"	"	6400	-	2.0	122	2.1
1.4	**199**	**1.3**	994.0	"	"	6400	-	1.7	150	1.75
1.2	**235**	**1.1**	1190	"	"	6400	-	1.4	193	1.35
3.0	**127**	**3.3**	460.0	**BF20Z-../D04LA4**	28	7900	-	3.6	106	4.0
1.9	**141**	**3.3**	736.1	**BF20G06-../D04LA4**	31	7900	-	2.3	106	4.3
1.7	**159**	**2.9**	810.0	"	"	7900	-	2.0	125	3.7
1.5	**183**	**2.5**	952.7	"	"	7900	-	1.8	141	3.3
1.2	**240**	**1.9**	1140	"	"	7900	-	1.5	178	2.6
1.0	**295**	**1.55**	1392	"	"	7900	-	1.2	230	2.0
0.9	**335**	**1.35**	1533	"	"	7900	-	1.1	260	1.75
0.8	**385**	**1.2**	1764	"	"	7900	-	0.95	310	1.5
1.2	**240**	**2.6**	1150	**BF30G06-../D04LA4**	41	7400	-	1.5	177	3.6
1.1	**265**	**2.4**	1286	"	"	7400	-	1.3	210	3.0
1.0	**295**	**2.1**	1404	"	"	7400	-	1.2	230	2.7
0.85	**355**	**1.75**	1686	"	"	7400	-	1.0	290	2.2
0.7	**450**	**1.4**	2026	"	"	7400	-	0.8	380	1.65
0.6	**530**	**1.2**	2386	"	"	7400	-	0.7	440	1.45

P = 0.06 kW

50 Hz			i	Type	m	F_{RN}	F_{RV}	60 Hz		
n_2	M_2	f_B						n_2	M_2	f_B
1/min	Nm				kg	N	N	1/min	Nm	
51	**11.2**	**8.5**	26.76	**BF06-../D05LA4**	10	3000	-	61	9.3	10
43	**13.3**	**7.1**	31.50	"	"	3200	-	52	11	8.6
36	**15.9**	**6.0**	37.69	"	"	3500	-	43	13.3	7.1
29.5	**19.4**	**4.9**	46.14	"	"	3800	-	35.5	16.1	5.9
23.5	**24**	**4.0**	58.33	"	"	4000	-	28	20	4.8
20.5	**27.5**	**3.5**	66.82	"	"	4000	-	24.5	23	4.1
16.5	**34.5**	**2.8**	83.61	"	"	4000	-	19.5	29	3.3
14.5	**39.5**	**2.4**	95.16	"	"	4000	-	17.5	32.5	2.9
12.5	**45.5**	**1.8**	110.8	"	"	4000	-	15	38	2.1
7.5	**76**	**3.2**	180.1	**BF10Z-../D06LA4**	24	6400	-	9.0	63	3.8
6.9	**83**	**2.9**	198.0	"	"	6400	-	8.2	69	3.5
6.3	**90**	**2.7**	214.5	"	"	6400	-	7.6	75	3.2
5.8	**98**	**2.4**	235.8	"	"	6400	-	6.9	83	2.9
5.3	**108**	**2.2**	257.4	"	"	6400	-	6.3	90	2.7
4.8	**119**	**2.0**	283.1	"	"	6400	-	5.8	98	2.4
4.2	**136**	**1.75**	324.3	"	"	6400	-	5.0	114	2.1

P = 0.06 kW

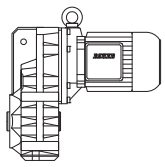

50 Hz			i	Type	m	F_{RN}	F_{RV}	60 Hz		
n_2	M_2	f_B						n_2	M_2	f_B
1/min	Nm				kg	N	N	1/min	Nm	
3.8	**150**	**1.6**	356.6	**BF10Z-../D06LA4**	"	6400	-	4.6	124	1.95
3.6	**159**	**1.5**	380.2	"	"	6400	-	4.3	133	1.8
3.3	**173**	**1.4**	418.0	"	"	6400	-	3.9	146	1.65
2.9	**197**	**1.2**	469.5	"	"	6400	-	3.5	163	1.45
2.6	**220**	**1.1**	539.1	"	"	6400	-	3.1	184	1.3
2.3	**245**	**0.98**	592.8	"	"	6400	-	2.8	200	1.2
2.1	**210**	**1.25**	643.8	**BF10G06-../D06LA4**	28	6400	-	2.6	157	1.65
1.8	**255**	**1.0**	768.2	"	"	6400	-	2.2	198	1.3
1.6	**290**	**0.9**	845.1	"	"	6400	-	2.0	215	1.2
4.2	**136**	**3.1**	325.2	**BF20Z-../D06LA4**	31	7900	-	5.0	114	3.7
4.0	**143**	**2.9**	339.1	"	"	7900	-	4.8	119	3.5
3.7	**154**	**2.7**	373.1	"	"	7900	-	4.4	130	3.2
3.3	**173**	**2.4**	418.1	"	"	7900	-	3.9	146	2.9
3.0	**191**	**2.2**	460.0	"	"	7900	-	3.6	159	2.6
2.7	**157**	**2.9**	513.7	**BF20G06-../D06LA4**	34	7900	-	3.2	124	3.7
2.2	**200**	**2.3**	617.0	"	"	7900	-	2.7	152	3.0
1.9	**240**	**1.9**	736.1	"	"	7900	-	2.3	189	2.4
1.7	**270**	**1.7**	810.0	"	"	7900	-	2.0	220	2.1
1.5	**310**	**1.5**	952.7	"	"	7900	-	1.8	245	1.9
1.2	**400**	**1.15**	1140	"	"	7900	-	1.5	305	1.5
1.0	**485**	**0.95**	1392	"	"	7900	-	1.2	390	1.2
3.3	**173**	**3.3**	412.6	**BF30Z-../D06LA4**	42	7400	-	4.0	143	4.0
3.0	**191**	**3.0**	463.3	"	"	7400	-	3.5	163	3.5
2.6	**220**	**2.6**	537.0	"	"	7400	-	3.1	184	3.1
2.3	**245**	**2.3**	590.7	"	"	7400	-	2.8	200	2.9
2.2	**200**	**3.2**	622.4	**BF30G06-../D06LA4**	45	7400	-	2.7	151	4.2
2.0	**225**	**2.8**	705.1	"	"	7400	-	2.3	192	3.3
1.7	**270**	**2.3**	817.1	"	"	7400	-	2.0	220	2.9
1.5	**310**	**2.0**	961.1	"	"	7400	-	1.7	265	2.4
1.2	**400**	**1.6**	1150	"	"	7400	-	1.5	305	2.1
1.1	**435**	**1.45**	1286	"	"	7400	-	1.3	355	1.75
1.0	**485**	**1.3**	1404	"	"	7400	-	1.2	390	1.6
0.85	**580**	**1.1**	1686	"	"	7400	-	1.0	480	1.3
0.95	**340**	**2.9**	1484	**BF40G10-../D06LA4**	58	10600	-	1.1	255	3.9
0.75	**460**	**2.2**	1810	"	"	10600	-	0.9	335	3.0
0.7	**500**	**2.0**	1997	"	"	10600	-	0.85	360	2.8
0.55	**710**	**1.4**	2536	"	"	10600	-	0.65	550	1.8
0.49	**840**	**1.2**	2810	"	"	10600	-	0.6	620	1.6
0.7	**520**	**2.7**	2059	**BF50G10-../D06LA4**	86	13600	-	0.8	415	3.4
0.6	**640**	**2.2**	2360	"	"	13600	-	0.7	510	2.7
0.49	**860**	**1.65**	2810	"	"	13600	-	0.6	640	2.2
0.41	**1090**	**1.3**	3348	"	"	13600	-	0.49	860	1.65
0.34	**1370**	**1.0**	4019	"	"	13600	-	0.41	1090	1.3
0.42	**860**	**2.9**	3237	**BF60G20-../D06LA4**	134	15300	43300	0.55	530	4.7
0.35	**1130**	**2.2**	3883	"	"	15300	43300	0.42	860	2.9
0.3	**1400**	**1.8**	4646	"	"	15300	43300	0.35	1130	2.2
0.26	**1700**	**1.45**	5241	"	"	15300	43300	0.31	1340	1.85
0.23	**1980**	**1.25**	6014	"	"	15300	43300	0.27	1620	1.55
0.21	**2200**	**1.15**	6679	"	"	15300	43300	0.25	1790	1.4
0.24	**1890**	**3.0**	5691	**BF70G20-../D06LA4**	212	16100	47700	0.29	1480	3.9
0.21	**2200**	**2.6**	6530	"	"	16100	47700	0.25	1800	3.2
0.19	**2500**	**2.3**	7248	"	"	16100	47700	0.23	2000	2.9
0.17	**2850**	**2.0**	8052	"	"	16100	47700	0.21	2200	2.6

P = 0.09 kW

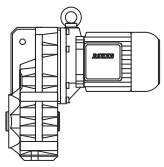

50 Hz			i	Type	m	F_{RN}	F_{RV}	60 Hz		
n_2	M_2	f_B						n_2	M_2	f_B
1/min	Nm				kg	N	N	1/min	Nm	
112	**7.6**	**9.9**	12.07	**BF06-../D05LA4**	10	2000	-	135	6.3	12
96	**8.9**	**9.6**	14.21	"	"	2100	-	115	7.4	11
80	**10.7**	**8.9**	16.99	"	"	2500	-	96	8.9	11
67	**12.8**	**7.4**	20.42	"	"	2700	-	80	10.7	8.9
51	**16.8**	**5.7**	26.76	"	"	3000	-	61	14	6.8
43	**19.9**	**4.8**	31.50	"	"	3200	-	52	16.5	5.8
36	**23.5**	**4.0**	37.69	"	"	3500	-	43	19.9	4.8
29.5	**29**	**3.3**	46.14	"	"	3800	-	35.5	24	4.0
23.5	**36.5**	**2.6**	58.33	"	"	4000	-	28	30.5	3.1
20.5	**41.5**	**2.3**	66.82	"	"	4000	-	24.5	35	2.7
16.5	**52**	**1.85**	83.61	"	"	4000	-	19.5	44	2.2
14.5	**59**	**1.6**	95.16	"	"	4000	-	17.5	49	1.95
12.5	**68**	**1.2**	110.8	"	"	4000	-	15	57	1.4
11	**78**	**3.1**	123.5	**BF10-../D06LA4**	23	6100	-	13.5	63	3.8
10.5	**81**	**3.0**	128.9	"	"	6200	-	13	66	3.6
9.6	**89**	**2.7**	141.8	"	"	6400	-	11.5	74	3.2
9.0	**95**	**2.5**	151.2	**BF10Z-../D06LA4**	24	6400	-	11	78	3.1
8.2	**104**	**2.3**	166.2	"	"	6400	-	9.8	87	2.8
7.5	**114**	**2.1**	180.1	"	"	6400	-	9.0	95	2.5
6.9	**124**	**1.95**	198.0	"	"	6400	-	8.2	104	2.3
6.3	**136**	**1.75**	214.5	"	"	6400	-	7.6	113	2.1
5.8	**148**	**1.6**	235.8	"	"	6400	-	6.9	124	1.95
5.3	**162**	**1.5**	257.4	"	"	6400	-	6.3	136	1.75
4.8	**179**	**1.35**	283.1	"	"	6400	-	5.8	148	1.6
4.2	**200**	**1.2**	324.3	"	"	6400	-	5.0	171	1.4
3.8	**225**	**1.05**	356.6	"	"	6400	-	4.6	186	1.3
3.6	**235**	**1.0**	380.2	"	"	6400	-	4.3	199	1.2
3.3	**260**	**0.92**	418.0	"	"	6400	-	3.9	220	1.1
2.9	**295**	**0.81**	469.5	"	"	6400	-	3.5	245	0.98
2.6	**270**	**0.96**	536.0	**BF10G06-../D06LA4**	28	6400	-	3.1	220	1.2
6.3	**136**	**3.1**	216.9	**BF20Z-../D06LA4**	31	7900	-	7.5	114	3.7
5.8	**148**	**2.8**	235.9	"	"	7900	-	6.9	124	3.4
5.3	**162**	**2.6**	259.6	"	"	7900	-	6.3	136	3.1
4.6	**186**	**2.3**	295.5	"	"	7900	-	5.5	156	2.7
4.2	**200**	**2.1**	325.2	"	"	7900	-	5.0	171	2.5
4.0	**210**	**2.0**	339.1	"	"	7900	-	4.8	179	2.3
3.7	**230**	**1.85**	373.1	"	"	7900	-	4.4	195	2.2
3.3	**260**	**1.6**	418.1	"	"	7900	-	3.9	220	1.9
3.0	**285**	**1.45**	460.0	"	"	7900	-	3.6	235	1.8
2.7	**260**	**1.75**	513.7	**BF20G06-../D06LA4**	34	7900	-	3.2	210	2.2
2.2	**330**	**1.4**	617.0	"	"	7900	-	2.7	255	1.8
1.9	**390**	**1.2**	736.1	"	"	7900	-	2.3	310	1.5
1.7	**440**	**1.05**	810.0	"	"	7900	-	2.0	360	1.3
1.5	**500**	**0.92**	952.7	"	"	7900	-	1.8	405	1.15
4.7	**182**	**3.2**	289.8	**BF30Z-../D06LA4**	42	7400	-	5.6	153	3.8
4.4	**195**	**2.9**	310.7	"	"	7400	-	5.3	162	3.5
4.0	**210**	**2.7**	341.8	"	"	7400	-	4.8	179	3.2
3.6	**235**	**2.4**	375.1	"	"	7400	-	4.4	195	2.9
3.3	**260**	**2.2**	412.6	"	"	7400	-	4.0	210	2.7
3.0	**285**	**2.0**	463.3	"	"	7400	-	3.5	245	2.3
2.6	**330**	**1.75**	537.0	"	"	7400	-	3.1	275	2.1
2.3	**370**	**1.55**	590.7	"	"	7400	-	2.8	305	1.9
2.2	**330**	**1.9**	622.4	**BF30G06-../D06LA4**	45	7400	-	2.7	255	2.5
2.0	**370**	**1.7**	705.1	"	"	7400	-	2.3	315	2.0
1.7	**435**	**1.45**	817.1	"	"	7400	-	2.0	360	1.75
1.5	**500**	**1.25**	961.1	"	"	7400	-	1.7	430	1.45
1.2	**630**	**1.0**	1150	"	"	7400	-	1.5	495	1.25
1.1	**690**	**0.91**	1286	"	"	7400	-	1.3	570	1.1
1.0	**770**	**0.82**	1404	"	"	7400	-	1.2	630	1.0

P = 0.09 kW

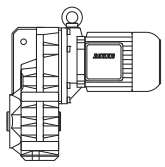

50 Hz			i	Type	m	F_{RN}	F_{RV}	60 Hz		
n_2	M_2	f_B						n_2	M_2	f_B
1/min	Nm				kg	N	N	1/min	Nm	
3.0	**285**	**3.2**	459.1	**BF40Z-../D06LA4**	53	10600	-	3.6	235	3.8
2.7	**315**	**2.9**	514.6	"	"	10600	-	3.2	265	3.4
2.4	**355**	**2.5**	566.1	"	"	10600	-	2.9	295	3.1
1.5	**350**	**2.9**	928.9	**BF40G10-../D06LA4**	58	10600	-	1.8	255	3.9
1.3	**420**	**2.4**	1106	"	"	10600	-	1.5	330	3.0
1.1	**540**	**1.85**	1324	"	"	10600	-	1.3	425	2.4
0.95	**640**	**1.55**	1484	"	"	10600	-	1.1	510	1.95
0.75	**840**	**1.2**	1810	"	"	10600	-	0.9	650	1.55
0.7	**910**	**1.1**	1997	"	"	10600	-	0.85	690	1.45
1.2	**500**	**2.8**	1203	**BF50G10-../D06LA4**	86	13600	-	1.4	400	3.5
1.0	**620**	**2.3**	1359	"	"	13600	-	1.2	475	2.9
0.9	**680**	**2.1**	1520	"	"	13600	-	1.1	510	2.7
0.85	**730**	**1.9**	1684	"	"	13600	-	1.0	570	2.5
0.7	**920**	**1.5**	2059	"	"	13600	-	0.8	770	1.8
0.6	**1120**	**1.25**	2360	"	"	13600	-	0.7	920	1.5
0.7	**780**	**3.2**	1955	**BF60G20-../D06LA4**	134	15300	43300	0.85	560	4.5
0.65	**860**	**2.9**	2172	"	"	15300	43300	0.75	680	3.7
0.49	**1250**	**2.0**	2781	"	"	15300	43300	0.6	930	2.7
0.42	**1540**	**1.6**	3237	"	"	15300	43300	0.55	1060	2.4
0.35	**1950**	**1.3**	3883	"	"	15300	43300	0.42	1540	1.6
0.3	**2350**	**1.05**	4646	"	"	15300	43300	0.35	1950	1.3
0.34	**2000**	**2.9**	4090	**BF70G20-../D06LA4**	212	16100	47700	0.4	1650	3.5
0.3	**2350**	**2.4**	4542	"	"	16100	47700	0.36	1890	3.0
0.27	**2650**	**2.2**	5124	"	"	16100	47700	0.32	2150	2.7
0.24	**3050**	**1.85**	5691	"	"	16100	47700	0.29	2450	2.3
0.21	**3600**	**1.6**	6530	"	"	16100	47700	0.25	2900	1.95
0.19	**4000**	**1.45**	7248	"	"	16100	47700	0.23	3200	1.8
0.17	**4550**	**1.25**	8052	"	"	16100	47700	0.21	3600	1.6

P = 0.12 kW

50 Hz			i	Type	m	F_{RN}	F_{RV}	60 Hz		
n_2	M_2	f_B						n_2	M_2	f_B
1/min	Nm				kg	N	N	1/min	Nm	
47.5	**24**	**10**	28.47	**BF10-../D06LA4**	23	3450	-	57	20	12
43.5	**26**	**9.2**	31.31	"	"	3600	-	52	22	11
37.5	**30.5**	**7.9**	36.15	"	"	3800	-	45	25	9.6
34	**33.5**	**7.2**	39.75	"	"	3950	-	41	27.5	8.7
31.5	**36**	**6.7**	43.06	"	"	4100	-	38	30	8.0
29	**39.5**	**6.1**	47.35	"	"	4250	-	34.5	33	7.3
26.5	**43**	**5.6**	51.28	"	"	4400	-	32	35.5	6.8
24	**47.5**	**5.1**	56.39	"	"	4550	-	29	39.5	6.1
22	**52**	**4.6**	61.55	"	"	4700	-	26.5	43	5.6
20	**57**	**4.2**	67.69	"	"	4900	-	24	47.5	5.1
17.5	**65**	**3.7**	77.55	"	"	5100	-	21	54	4.4
16	**71**	**3.4**	85.27	"	"	5300	-	19	60	4.0
15	**76**	**3.2**	90.91	"	"	5400	-	18	63	3.8
14	**81**	**3.0**	99.97	"	"	5600	-	16.5	69	3.5
12.5	**91**	**2.6**	112.3	"	"	5900	-	14.5	79	3.0
11	**104**	**2.3**	123.5	"	"	6100	-	13.5	84	2.9
10.5	**109**	**2.2**	128.9	"	"	6200	-	13	88	2.7
9.6	**119**	**2.0**	141.8	"	"	6400	-	11.5	99	2.4
9.0	**127**	**1.9**	151.2	**BF10Z-../D06LA4**	24	6400	-	11	104	2.3
8.2	**139**	**1.75**	166.2	"	"	6400	-	9.8	116	2.1
7.5	**152**	**1.6**	180.1	"	"	6400	-	9.0	127	1.9
6.9	**166**	**1.45**	198.0	"	"	6400	-	8.2	139	1.75
6.3	**181**	**1.35**	214.5	"	"	6400	-	7.6	150	1.6
5.8	**197**	**1.2**	235.8	"	"	6400	-	6.9	166	1.45
5.3	**215**	**1.1**	257.4	"	"	6400	-	6.3	181	1.35

P = 0.12 kW

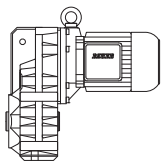

50 Hz			i	Type	m	F_{RN}	F_{RV}	60 Hz		
n_2	M_2	f_B						n_2	M_2	f_B
1/min	Nm				kg	N	N	1/min	Nm	
147	**7.7**	**9.1**	9.21	**BF06-../D05LA4**	10	1900	-	176	6.5	11
112	**10.2**	**7.4**	12.07	"	"	2000	-	135	8.4	8.9
96	**11.9**	**7.1**	14.21	"	"	2100	-	115	9.9	8.6
80	**14.3**	**6.6**	16.99	"	"	2500	-	96	11.9	8.0
67	**17.1**	**5.6**	20.42	"	"	2700	-	80	14.3	6.6
51	**22**	**4.3**	26.76	"	"	3000	-	61	18.7	5.1
43	**26.5**	**3.6**	31.50	"	"	3200	-	52	22	4.3
36	**31.5**	**3.0**	37.69	"	"	3500	-	43	26.5	3.6
29.5	**38.5**	**2.5**	46.14	"	"	3800	-	35.5	32	3.0
23.5	**48.5**	**1.95**	58.33	"	"	4000	-	28	40.5	2.3
20.5	**55**	**1.75**	66.82	"	"	4000	-	24.5	46.5	2.0
16.5	**69**	**1.4**	83.61	"	"	4000	-	19.5	58	1.65
14.5	**79**	**1.2**	95.16	"	"	4000	-	17.5	65	1.45
12.5	**91**	**0.89**	110.8	"	"	4000	-	15	76	1.05
15	**76**	**3.2**	90.91	**BF10-../D06LA4**	23	5400	-	18	63	3.8
14	**81**	**3.0**	99.97	"	"	5600	-	16.5	69	3.5
12.5	**91**	**2.6**	112.3	"	"	5900	-	14.5	79	3.0
11	**104**	**2.3**	123.5	"	"	6100	-	13.5	84	2.9
10.5	**109**	**2.2**	128.9	"	"	6200	-	13	88	2.7
9.6	**119**	**2.0**	141.8	"	"	6400	-	11.5	99	2.4
9.0	**127**	**1.9**	151.2	**BF10Z-../D06LA4**	24	6400	-	11	104	2.3
8.2	**139**	**1.75**	166.2	"	"	6400	-	9.8	116	2.1
7.5	**152**	**1.6**	180.1	"	"	6400	-	9.0	127	1.9
6.9	**166**	**1.45**	198.0	"	"	6400	-	8.2	139	1.75
6.3	**181**	**1.35**	214.5	"	"	6400	-	7.6	150	1.6
5.8	**197**	**1.2**	235.8	"	"	6400	-	6.9	166	1.45
5.3	**215**	**1.1**	257.4	"	"	6400	-	6.3	181	1.35
4.8	**235**	**1.0**	283.1	"	"	6400	-	5.8	197	1.2
4.2	**270**	**0.89**	324.3	"	"	6400	-	5.0	225	1.05
3.8	**300**	**0.8**	356.6	"	"	6400	-	4.6	245	0.98
3.6	**275**	**0.95**	377.9	**BF10G06-../D06LA4**	28	6400	-	4.3	225	1.15
3.2	**310**	**0.84**	424.5	"	"	6400	-	3.9	245	1.05
8.7	**131**	**3.2**	155.4	**BF20Z-../D06LA4**	31	7900	-	10.5	109	3.9
8.3	**138**	**3.0**	164.3	"	"	7900	-	9.9	115	3.7
7.5	**152**	**2.8**	180.8	"	"	7900	-	9.0	127	3.3
6.9	**166**	**2.5**	197.1	"	"	7900	-	8.3	138	3.0
6.3	**181**	**2.3**	216.9	"	"	7900	-	7.5	152	2.8
5.8	**197**	**2.1**	235.9	"	"	7900	-	6.9	166	2.5
5.3	**215**	**1.95**	259.6	"	"	7900	-	6.3	181	2.3
4.6	**245**	**1.7**	295.5	"	"	7900	-	5.5	205	2.0
4.2	**270**	**1.55**	325.2	"	"	7900	-	5.0	225	1.85
4.0	**285**	**1.45**	339.1	"	"	7900	-	4.8	235	1.8
3.7	**305**	**1.4**	373.1	"	"	7900	-	4.4	260	1.6
3.3	**345**	**1.2**	418.1	"	"	7900	-	3.9	290	1.45
3.0	**380**	**1.1**	460.0	"	"	7900	-	3.6	315	1.35
2.7	**370**	**1.25**	513.7	**BF20G06-../D06LA4**	34	7900	-	3.2	300	1.55
2.2	**460**	**1.0**	617.0	"	"	7900	-	2.7	360	1.3
1.9	**540**	**0.85**	736.1	"	"	7900	-	2.3	435	1.05
6.1	**187**	**3.1**	224.8	**BF30Z-../D06LA4**	42	7400	-	7.3	156	3.7
5.5	**205**	**2.8**	247.3	"	"	7400	-	6.6	173	3.3
5.2	**220**	**2.6**	263.5	"	"	7400	-	6.2	184	3.1
4.7	**240**	**2.4**	289.8	"	"	7400	-	5.6	200	2.9
4.4	**260**	**2.2**	310.7	"	"	7400	-	5.3	215	2.7
4.0	**285**	**2.0**	341.8	"	"	7400	-	4.8	235	2.4
3.6	**315**	**1.85**	375.1	"	"	7400	-	4.4	260	2.2
3.3	**345**	**1.65**	412.6	"	"	7400	-	4.0	285	2.0
3.0	**380**	**1.5**	463.3	"	"	7400	-	3.5	325	1.75
2.6	**440**	**1.3**	537.0	"	"	7400	-	3.1	365	1.6
2.3	**495**	**1.15**	590.7	"	"	7400	-	2.8	405	1.4
2.2	**460**	**1.35**	622.4	**BF30G06-../D06LA4**	45	7400	-	2.7	360	1.75
2.0	**510**	**1.25**	705.1	"	"	7400	-	2.3	440	1.45
1.7	**600**	**1.05**	817.1	"	"	7400	-	2.0	500	1.25
1.5	**690**	**0.91**	961.1	"	"	7400	-	1.7	600	1.05

P = 0.12 kW

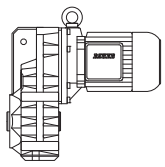

50 Hz			i	Type	m	F_{RN}	F_{RV}	60 Hz		
n_2	M_2	f_B						n_2	M_2	f_B
1/min	Nm				kg	N	N	1/min	Nm	
4.2	**270**	**3.3**	324.7	**BF40Z-../D06LA4**	53	10600	-	5.0	225	4.0
3.9	**290**	**3.1**	346.8	"	"	10600	-	4.7	240	3.8
3.6	**315**	**2.9**	381.5	"	"	10600	-	4.3	265	3.4
3.3	**345**	**2.6**	417.3	"	"	10600	-	3.9	290	3.1
3.0	**380**	**2.4**	459.1	"	"	10600	-	3.6	315	2.9
2.7	**420**	**2.1**	514.6	"	"	10600	-	3.2	355	2.5
2.4	**475**	**1.9**	566.1	"	"	10600	-	2.9	395	2.3
2.3	**310**	**3.2**	597.3	**BF40G10-../D06LA4**	58	10600	-	2.8	220	4.5
1.9	**395**	**2.5**	731.6	"	"	10600	-	2.3	290	3.4
1.5	**540**	**1.85**	928.9	"	"	10600	-	1.8	410	2.4
1.3	**640**	**1.55**	1106	"	"	10600	-	1.5	520	1.9
1.1	**800**	**1.25**	1324	"	"	10600	-	1.3	640	1.55
0.95	**940**	**1.05**	1484	"	"	10600	-	1.1	780	1.3
2.8	**405**	**3.2**	496.4	**BF50Z-../D06LA4**	82	13600	-	3.3	345	3.8
2.5	**455**	**2.9**	555.2	"	"	13600	-	3.0	380	3.4
1.6	**500**	**2.8**	864.5	**BF50G10-../D06LA4**	86	13600	-	1.9	395	3.5
1.4	**590**	**2.4**	1029	"	"	13600	-	1.6	490	2.9
1.2	**740**	**1.9**	1203	"	"	13600	-	1.4	600	2.3
1.0	**900**	**1.55**	1359	"	"	13600	-	1.2	710	1.95
0.9	**1000**	**1.4**	1520	"	"	13600	-	1.1	770	1.8
0.85	**1060**	**1.3**	1684	"	"	13600	-	1.0	860	1.65
0.7	**1330**	**1.05**	2059	"	"	13600	-	0.8	1130	1.25
0.95	**820**	**3.0**	1494	**BF60G20-../D06LA4**	134	15300	43300	1.1	660	3.8
0.85	**920**	**2.7**	1658	"	"	15300	43300	1.0	720	3.5
0.7	**1190**	**2.1**	1955	"	"	15300	43300	0.85	900	2.8
0.65	**1300**	**1.9**	2172	"	"	15300	43300	0.75	1060	2.4
0.49	**1830**	**1.35**	2781	"	"	15300	43300	0.6	1400	1.8
0.42	**2200**	**1.15**	3237	"	"	15300	43300	0.55	1580	1.6
0.48	**1890**	**3.0**	2849	**BF70G20-../D06LA4**	212	16100	47700	0.6	1410	4.0
0.4	**2350**	**2.4**	3417	"	"	16100	47700	0.48	1890	3.0
0.34	**2850**	**2.0**	4090	"	"	16100	47700	0.4	2350	2.4
0.3	**3300**	**1.75**	4542	"	"	16100	47700	0.36	2650	2.2
0.27	**3750**	**1.5**	5124	"	"	16100	47700	0.32	3050	1.85
0.24	**4250**	**1.35**	5691	"	"	16100	47700	0.29	3450	1.65
0.21	**4950**	**1.15**	6530	"	"	16100	47700	0.25	4050	1.4
0.19	**5500**	**1.05**	7248	"	"	16100	47700	0.23	4450	1.3

P = 0.18 kW

50 Hz			i	Type	m	F_{RN}	F_{RV}	60 Hz		
n_2	M_2	f_B						n_2	M_2	f_B
1/min	Nm				kg	N	N	1/min	Nm	
177	**9.7**	**7.0**	7.66	**BF06-../D05LA4**	10	1800	-	215	7.9	8.6
147	**11.6**	**6.0**	9.21	"	"	1900	-	176	9.7	7.2
112	**15.3**	**4.9**	12.07	"	"	2000	-	135	12.7	5.9
96	**17.9**	**4.7**	14.21	"	"	2100	-	115	14.9	5.7
80	**21**	**4.5**	16.99	"	"	2500	-	96	17.9	5.3
67	**25.5**	**3.7**	20.42	"	"	2700	-	80	21	4.5
51	**33.5**	**2.8**	26.76	"	"	3000	-	61	28	3.4
43	**39.5**	**2.4**	31.50	"	"	3200	-	52	33	2.9
36	**47.5**	**2.0**	37.69	"	"	3500	-	43	39.5	2.4
29.5	**58**	**1.65**	46.14	"	"	3800	-	35.5	48	2.0
23.5	**73**	**1.3**	58.33	"	"	4000	-	28	61	1.55
20.5	**83**	**1.15**	66.82	"	"	4000	-	24.5	70	1.35
16.5	**104**	**0.91**	83.61	"	"	4000	-	19.5	88	1.1
14.5	**118**	**0.81**	95.16	"	"	4000	-	17.5	98	0.97
22	**78**	**3.1**	61.55	**BF10-../D06LA4**	23	4700	-	26.5	64	3.8
20	**85**	**2.8**	67.69	"	"	4900	-	24	71	3.4
17.5	**98**	**2.4**	77.55	"	"	5100	-	21	81	3.0
16	**107**	**2.2**	85.27	"	"	5300	-	19	90	2.7
15	**114**	**2.1**	90.91	"	"	5400	-	18	95	2.5
14	**122**	**1.95**	99.97	"	"	5600	-	16.5	104	2.3
12.5	**137**	**1.75**	112.3	"	"	5900	-	14.5	118	2.0

P = 0.18 kW

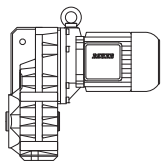

50 Hz			i	Type	m	F_{RN}	F_{RV}	60 Hz		
n_2	M_2	f_B						n_2	M_2	f_B
1/min	Nm				kg	N	N	1/min	Nm	
11	**156**	**1.55**	123.5	**BF10-../D06LA4**	"	6100	-	13.5	127	1.9
10.5	**163**	**1.45**	128.9	"	"	6200	-	13	132	1.8
9.6	**179**	**1.35**	141.8	"	"	6400	-	11.5	149	1.6
9.0	**191**	**1.25**	151.2	**BF10Z-../D06LA4**	24	6400	-	11	156	1.55
8.2	**205**	**1.15**	166.2	"	"	6400	-	9.8	175	1.35
7.5	**225**	**1.05**	180.1	"	"	6400	-	9.0	191	1.25
6.9	**245**	**0.98**	198.0	"	"	6400	-	8.2	205	1.15
6.3	**270**	**0.89**	214.5	"	"	6400	-	7.6	225	1.05
5.8	**295**	**0.81**	235.8	"	"	6400	-	6.9	245	0.98
13.5	**127**	**3.3**	100.2	**BF20-../D06LA4**	30	7000	-	16.5	104	4.0
12.5	**137**	**3.1**	110.2	"	"	7300	-	15	114	3.7
11	**156**	**2.7**	123.5	"	"	7600	-	13.5	127	3.3
10	**171**	**2.5**	135.9	"	"	7900	-	12	143	2.9
9.6	**179**	**2.3**	141.2	**BF20Z-../D06LA4**	31	7900	-	11.5	149	2.8
8.7	**197**	**2.1**	155.4	"	"	7900	-	10.5	163	2.6
8.3	**205**	**2.0**	164.3	"	"	7900	-	9.9	173	2.4
7.5	**225**	**1.85**	180.8	"	"	7900	-	9.0	191	2.2
6.9	**245**	**1.7**	197.1	"	"	7900	-	8.3	205	2.0
6.3	**270**	**1.55**	216.9	"	"	7900	-	7.5	225	1.85
5.8	**295**	**1.4**	235.9	"	"	7900	-	6.9	245	1.7
5.3	**320**	**1.3**	259.6	"	"	7900	-	6.3	270	1.55
4.6	**370**	**1.15**	295.5	"	"	7900	-	5.5	310	1.35
4.2	**405**	**1.05**	325.2	"	"	7900	-	5.0	340	1.25
4.0	**425**	**0.99**	339.1	"	"	7900	-	4.8	355	1.2
3.7	**460**	**0.91**	373.1	"	"	7900	-	4.4	390	1.1
3.3	**520**	**0.81**	418.1	"	"	7900	-	3.9	440	0.95
9.9	**173**	**3.3**	137.1	**BF30-../D06LA4**	40	7400	-	12	143	4.0
9.0	**191**	**3.0**	150.7	**BF30Z-../D06LA4**	42	7400	-	11	156	3.7
8.2	**205**	**2.8**	165.8	"	"	7400	-	9.8	175	3.3
7.7	**220**	**2.6**	176.6	"	"	7400	-	9.2	186	3.1
7.0	**245**	**2.3**	194.3	"	"	7400	-	8.4	200	2.9
6.1	**280**	**2.1**	224.8	"	"	7400	-	7.3	235	2.4
5.5	**310**	**1.85**	247.3	"	"	7400	-	6.6	260	2.2
5.2	**330**	**1.75**	263.5	"	"	7400	-	6.2	275	2.1
4.7	**365**	**1.6**	289.8	"	"	7400	-	5.6	305	1.9
4.4	**390**	**1.45**	310.7	"	"	7400	-	5.3	320	1.8
4.0	**425**	**1.35**	341.8	"	"	7400	-	4.8	355	1.6
3.6	**475**	**1.2**	375.1	"	"	7400	-	4.4	390	1.45
3.3	**520**	**1.1**	412.6	"	"	7400	-	4.0	425	1.35
3.0	**570**	**1.0**	463.3	"	"	7400	-	3.5	490	1.15
2.6	**660**	**0.87**	537.0	"	"	7400	-	3.1	550	1.05
2.2	**720**	**0.88**	622.4	**BF30G06-../D06LA4**	45	7400	-	2.7	570	1.1
6.1	**280**	**3.2**	222.4	**BF40Z-../D06LA4**	53	10600	-	7.3	235	3.8
5.4	**315**	**2.9**	253.2	"	"	10600	-	6.4	265	3.4
4.9	**350**	**2.6**	278.5	"	"	10600	-	5.9	290	3.1
4.6	**370**	**2.4**	295.1	"	"	10600	-	5.5	310	2.9
4.2	**405**	**2.2**	324.7	"	"	10600	-	5.0	340	2.6
3.9	**440**	**2.0**	346.8	"	"	10600	-	4.7	365	2.5
3.6	**475**	**1.9**	381.5	"	"	10600	-	4.3	395	2.3
3.3	**520**	**1.75**	417.3	"	"	10600	-	3.9	440	2.0
3.0	**570**	**1.6**	459.1	"	"	10600	-	3.6	475	1.9
2.7	**630**	**1.45**	514.6	"	"	10600	-	3.2	530	1.7
2.4	**710**	**1.25**	566.1	"	"	10600	-	2.9	590	1.55
2.3	**560**	**1.8**	597.3	**BF40G10-../D06LA4**	58	10600	-	2.8	425	2.4
1.9	**690**	**1.45**	731.6	"	"	10600	-	2.3	540	1.85
1.5	**920**	**1.1**	928.9	"	"	10600	-	1.8	730	1.35
1.3	**1080**	**0.93**	1106	"	"	10600	-	1.5	900	1.1
4.3	**395**	**3.3**	316.6	**BF50Z-../D06LA4**	82	13600	-	5.2	330	3.9
3.9	**440**	**3.0**	354.0	"	"	13600	-	4.6	370	3.5
3.5	**490**	**2.7**	392.8	"	"	13600	-	4.2	405	3.2
3.1	**550**	**2.4**	439.3	"	"	13600	-	3.7	460	2.8
2.8	**610**	**2.1**	496.4	"	"	13600	-	3.3	520	2.5
2.5	**680**	**1.9**	555.2	"	"	13600	-	3.0	570	2.3

P = 0.18 kW

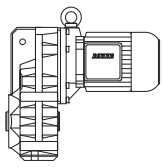

50 Hz			i	Type	m	F_{RN}	F_{RV}	60 Hz		
n_2	M_2	f_B						n_2	M_2	f_B
1/min	Nm				kg	N	N	1/min	Nm	
2.0	**660**	**2.1**	680.9	**BF50G10-../D06LA4**	86	13600	-	2.4	520	2.7
1.6	**860**	**1.65**	864.5	"	"	13600	-	1.9	690	2.0
1.4	**1000**	**1.4**	1029	"	"	13600	-	1.6	840	1.65
1.2	**1220**	**1.15**	1203	"	"	13600	-	1.4	1010	1.4
1.0	**1470**	**0.95**	1359	"	"	13600	-	1.2	1190	1.2
1.5	**870**	**2.9**	937.6	**BF60G20-../D06LA4**	134	15300	43300	1.8	670	3.7
1.2	**1120**	**2.2**	1211	"	"	15300	43300	1.4	920	2.7
0.95	**1430**	**1.75**	1494	"	"	15300	43300	1.1	1180	2.1
0.85	**1600**	**1.55**	1658	"	"	15300	43300	1.0	1290	1.95
0.7	**2000**	**1.25**	1955	"	"	15300	43300	0.85	1570	1.6
0.65	**2150**	**1.15**	2172	"	"	15300	43300	0.75	1830	1.35
0.75	**1850**	**3.1**	1912	**BF70G20-../D06LA4**	212	16100	47700	0.85	1580	3.6
0.6	**2350**	**2.4**	2448	"	"	16100	47700	0.7	1970	2.9
0.48	**3050**	**1.85**	2849	"	"	16100	47700	0.6	2350	2.4
0.4	**3800**	**1.5**	3417	"	"	16100	47700	0.48	3050	1.85
0.34	**4550**	**1.25**	4090	"	"	16100	47700	0.4	3800	1.5
0.3	**5200**	**1.1**	4542	"	"	16100	47700	0.36	4250	1.35

P = 0.25kW

50 Hz			i	Type	m	F_{RN}	F_{RV}	60 Hz		
n_2	M_2	f_B						n_2	M_2	f_B
1/min	Nm				kg	N	N	1/min	Nm	
177	**13.4**	**5.1**	7.66	**BF06-../D05LA4**	10	1800	-	215	11.1	6.1
147	**16.2**	**4.3**	9.21	"	"	1900	-	176	13.5	5.2
112	**21**	**3.6**	12.07	"	"	2000	-	135	17.6	4.3
96	**24.5**	**3.5**	14.21	"	"	2100	-	115	20.5	4.1
80	**29.5**	**3.2**	16.99	"	"	2500	-	96	24.5	3.9
67	**35.5**	**2.7**	20.42	"	"	2700	-	80	29.5	3.2
51	**46.5**	**2.0**	26.76	"	"	3000	-	61	39	2.4
43	**55**	**1.75**	31.50	"	"	3200	-	52	45.5	2.1
36	**66**	**1.45**	37.69	"	"	3500	-	43	55	1.75
29.5	**80**	**1.2**	46.14	"	"	3800	-	35.5	67	1.4
23.5	**101**	**0.94**	58.33	"	"	4000	-	28	85	1.1
20.5	**116**	**0.82**	66.82	"	"	4000	-	24.5	97	0.98
31.5	**75**	**3.2**	43.06	**BF10-../D06LA4**	23	4100	-	38	62	3.9
29	**82**	**2.9**	47.35	"	"	4250	-	34.5	69	3.5
26.5	**90**	**2.7**	51.28	"	"	4400	-	32	74	3.2
24	**99**	**2.4**	56.39	"	"	4550	-	29	82	2.9
22	**108**	**2.2**	61.55	"	"	4700	-	26.5	90	2.7
20	**119**	**2.0**	67.69	"	"	4900	-	24	99	2.4
17.5	**136**	**1.75**	77.55	"	"	5100	-	21	113	2.1
16	**149**	**1.6**	85.27	"	"	5300	-	19	125	1.9
15	**159**	**1.5**	90.91	"	"	5400	-	18	132	1.8
14	**170**	**1.4**	99.97	"	"	5600	-	16.5	144	1.65
12.5	**191**	**1.25**	112.3	"	"	5900	-	14.5	164	1.45
11	**215**	**1.1**	123.5	"	"	6100	-	13.5	176	1.35
10.5	**225**	**1.05**	128.9	"	"	6200	-	13	183	1.3
9.6	**245**	**0.98**	141.8	"	"	6400	-	11.5	205	1.15
9.0	**265**	**0.91**	151.2	**BF10Z-../D06LA4**	24	6400	-	11	215	1.1
8.2	**290**	**0.83**	166.2	"	"	6400	-	9.8	240	1.0
18	**132**	**3.2**	76.69	**BF20-../D06LA4**	30	6300	-	21.5	111	3.8
15.5	**154**	**2.7**	87.31	"	"	6600	-	19	125	3.4
14.5	**164**	**2.6**	96.08	"	"	6900	-	17	140	3.0
13.5	**176**	**2.4**	100.2	"	"	7000	-	16.5	144	2.9
12.5	**191**	**2.2**	110.2	"	"	7300	-	15	159	2.6
11	**215**	**1.95**	123.5	"	"	7600	-	13.5	176	2.4
10	**235**	**1.8**	135.9	"	"	7900	-	12	198	2.1
9.6	**245**	**1.7**	141.2	**BF20Z-../D06LA4**	31	7900	-	11.5	205	2.0
8.7	**270**	**1.55**	155.4	"	"	7900	-	10.5	225	1.85
8.3	**285**	**1.45**	164.3	"	"	7900	-	9.9	240	1.75

P = 0.25 kW

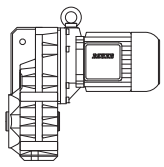

50 Hz			i	Type	m	F_{RN}	F_{RV}	60 Hz		
n_2	M_2	f_B						n_2	M_2	f_B
1/min	Nm				kg	N	N	1/min	m	
7.5	**315**	**1.35**	180.8	**BF20Z-../D06LA4**	"	7900	-	9.0	265	1.6
6.9	**345**	**1.2**	197.1	"	"	7900	-	8.3	285	1.45
6.3	**375**	**1.1**	216.9	"	"	7900	-	7.5	315	1.35
5.8	**410**	**1.0**	235.9	"	"	7900	-	6.9	345	1.2
5.3	**450**	**0.93**	259.6	"	"	7900	-	6.3	375	1.1
4.6	**510**	**0.82**	295.5	"	"	7900	-	5.5	430	0.98
13	**183**	**3.1**	107.6	**BF30-../D06LA4**	40	6700	-	15.5	154	3.7
11.5	**205**	**2.8**	118.3	"	"	7000	-	14	170	3.4
11	**215**	**2.7**	124.7	"	"	7100	-	13	183	3.1
9.9	**240**	**2.4**	137.1	"	"	7400	-	12	198	2.9
9.0	**265**	**2.2**	150.7	**BF30Z-../D06LA4**	42	7400	-	11	215	2.7
8.2	**290**	**2.0**	165.8	"	"	7400	-	9.8	240	2.4
7.7	**310**	**1.85**	176.6	"	"	7400	-	9.2	255	2.3
7.0	**340**	**1.7**	194.3	"	"	7400	-	8.4	280	2.1
6.1	**390**	**1.45**	224.8	"	"	7400	-	7.3	325	1.75
5.5	**430**	**1.35**	247.3	"	"	7400	-	6.6	360	1.6
5.2	**455**	**1.25**	263.5	"	"	7400	-	6.2	385	1.5
4.7	**500**	**1.15**	289.8	"	"	7400	-	5.6	425	1.35
4.4	**540**	**1.05**	310.7	"	"	7400	-	5.3	450	1.3
4.0	**590**	**0.97**	341.8	"	"	7400	-	4.8	495	1.15
3.6	**660**	**0.87**	375.1	"	"	7400	-	4.4	540	1.05
3.3	**720**	**0.8**	412.6	"	"	7400	-	4.0	590	0.97
8.7	**270**	**3.3**	155.6	**BF40Z-../D06LA4**	53	10600	-	10.5	225	4.0
7.9	**300**	**3.0**	171.2	"	"	10600	-	9.5	250	3.6
7.2	**330**	**2.7**	188.3	"	"	10600	-	8.7	270	3.3
6.7	**355**	**2.5**	202.2	"	"	10600	-	8.1	290	3.1
6.1	**390**	**2.3**	222.4	"	"	10600	-	7.3	325	2.8
5.4	**440**	**2.0**	253.2	"	"	10600	-	6.4	370	2.4
4.9	**485**	**1.85**	278.5	"	"	10600	-	5.9	400	2.3
4.6	**510**	**1.75**	295.1	"	"	10600	-	5.5	430	2.1
4.2	**560**	**1.6**	324.7	"	"	10600	-	5.0	475	1.9
3.9	**610**	**1.5**	346.8	"	"	10600	-	4.7	500	1.8
3.6	**660**	**1.35**	381.5	"	"	10600	-	4.3	550	1.65
3.3	**720**	**1.25**	417.3	"	"	10600	-	3.9	610	1.5
3.0	**790**	**1.15**	459.1	"	"	10600	-	3.6	660	1.35
2.7	**880**	**1.0**	514.6	"	"	10600	-	3.2	740	1.2
2.4	**990**	**0.91**	566.1	"	"	10600	-	2.9	820	1.1
2.3	**850**	**1.2**	597.3	**BF40G10-../D06LA4**	58	10600	-	2.8	660	1.5
1.9	**1050**	**0.95**	731.6	"	"	10600	-	2.3	830	1.2
5.5	**430**	**3.0**	247.5	**BF50Z-../D06LA4**	82	13600	-	6.6	360	3.6
4.9	**485**	**2.7**	276.8	"	"	13600	-	5.9	400	3.3
4.3	**550**	**2.4**	316.6	"	"	13600	-	5.2	455	2.9
3.9	**610**	**2.1**	354.0	"	"	13600	-	4.6	510	2.5
3.5	**680**	**1.9**	392.8	"	"	13600	-	4.2	560	2.3
3.1	**770**	**1.7**	439.3	"	"	13600	-	3.7	640	2.0
2.8	**850**	**1.55**	496.4	"	"	13600	-	3.3	720	1.8
2.5	**950**	**1.35**	555.2	"	"	13600	-	3.0	790	1.65
2.0	**1000**	**1.4**	680.9	**BF50G10-../D06LA4**	86	13600	-	2.4	800	1.75
1.6	**1280**	**1.1**	864.5	"	"	13600	-	1.9	1050	1.35
1.4	**1480**	**0.95**	1029	"	"	13600	-	1.6	1260	1.1
2.4	**750**	**3.3**	569.3	**BF60G20-../D06LA4**	134	15300	43300	2.9	580	4.3
2.0	**900**	**2.8**	689.0	"	"	15300	43300	2.4	700	3.6
1.7	**1090**	**2.3**	813.2	"	"	15300	43300	2.0	880	2.8
1.5	**1310**	**1.9**	937.6	"	"	15300	43300	1.8	1050	2.4
1.2	**1680**	**1.5**	1211	"	"	15300	43300	1.4	1390	1.8
0.95	**2100**	**1.2**	1494	"	"	15300	43300	1.1	1790	1.4
0.85	**2350**	**1.05**	1658	"	"	15300	43300	1.0	1960	1.3
1.0	**2000**	**2.9**	1390	**BF70G20-../D06LA4**	212	16100	47700	1.2	1630	3.5
0.85	**2350**	**2.4**	1621	"	"	16100	47700	1.0	1970	2.9
0.75	**2700**	**2.1**	1912	"	"	16100	47700	0.85	2350	2.4
0.6	**3500**	**1.65**	2448	"	"	16100	47700	0.7	2900	1.95
0.48	**4450**	**1.3**	2849	"	"	16100	47700	0.6	3450	1.65
0.4	**5400**	**1.05**	3417	"	"	16100	47700	0.48	4450	1.3

P = 0.3 kW

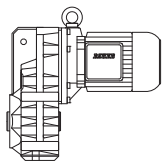

50 Hz			i	Type	m	F_{RN}	F_{RV}	60 Hz		
n_2	M_2	f_B						n_2	M_2	f_B
1/min	Nm				kg	N	N	1/min	Nm	
177	**16.1**	**4.2**	7.66	**BF06-../D07LA4**	14	1800	-	215	13.3	5.1
147	**19.4**	**3.6**	9.21	"	"	1900	-	176	16.2	4.3
112	**25.5**	**2.9**	12.07	"	"	2000	-	135	21	3.6
96	**29.5**	**2.9**	14.21	"	"	2100	-	115	24.5	3.5
80	**35.5**	**2.7**	16.99	"	"	2500	-	96	29.5	3.2
67	**42.5**	**2.2**	20.42	"	"	2700	-	80	35.5	2.7
51	**56**	**1.7**	26.76	"	"	3000	-	61	46.5	2.0
43	**66**	**1.45**	31.50	"	"	3200	-	52	55	1.75
36	**79**	**1.2**	37.69	"	"	3500	-	43	66	1.45
29.5	**97**	**0.98**	46.14	"	"	3800	-	35.5	80	1.2
37.5	**76**	**3.2**	36.15	**BF10-../D07LA4**	26	3800	-	45	63	3.8
34	**84**	**2.9**	39.75	"	"	3950	-	41	69	3.5
31.5	**90**	**2.7**	43.06	"	"	4100	-	38	75	3.2
29	**98**	**2.4**	47.35	"	"	4250	-	34.5	83	2.9
26.5	**108**	**2.2**	51.28	"	"	4400	-	32	89	2.7
24	**119**	**2.0**	56.39	"	"	4550	-	29	98	2.4
22	**130**	**1.85**	61.55	"	"	4700	-	26.5	108	2.2
20	**143**	**1.7**	67.69	"	"	4900	-	24	119	2.0
17.5	**163**	**1.45**	77.55	"	"	5100	-	21	136	1.75
16	**179**	**1.35**	85.27	"	"	5300	-	19	150	1.6
15	**191**	**1.25**	90.91	"	"	5400	-	18	159	1.5
14	**200**	**1.2**	99.97	"	"	5600	-	16.5	173	1.4
12.5	**225**	**1.05**	112.3	"	"	5900	-	14.5	197	1.2
11	**260**	**0.92**	123.5	"	"	6100	-	13.5	210	1.15
10.5	**270**	**0.89**	128.9	"	"	6200	-	13	220	1.1
9.6	**295**	**0.81**	141.8	"	"	6400	-	11.5	245	0.98
21.5	**133**	**3.2**	64.08	**BF20-../D07LA4**	32	5900	-	25.5	112	3.8
19.5	**146**	**2.9**	69.70	"	"	6100	-	23.5	121	3.5
18	**159**	**2.6**	76.69	"	"	6300	-	21.5	133	3.2
15.5	**184**	**2.3**	87.31	"	"	6600	-	19	150	2.8
14.5	**197**	**2.1**	96.08	"	"	6900	-	17	168	2.5
13.5	**210**	**2.0**	100.2	"	"	7000	-	16.5	173	2.4
12.5	**225**	**1.85**	110.2	"	"	7300	-	15	191	2.2
11	**260**	**1.6**	123.5	"	"	7600	-	13.5	210	2.0
10	**285**	**1.45**	135.9	"	"	7900	-	12	235	1.8
9.6	**295**	**1.4**	141.2	**BF20Z-../D07LA4**	34	7900	-	11.5	245	1.7
8.7	**325**	**1.3**	155.4	"	"	7900	-	10.5	270	1.55
8.3	**345**	**1.2**	164.3	"	"	7900	-	9.9	285	1.45
7.5	**380**	**1.1**	180.8	"	"	7900	-	9.0	315	1.35
6.9	**415**	**1.0**	197.1	"	"	7900	-	8.3	345	1.2
6.3	**450**	**0.93**	216.9	"	"	7900	-	7.5	380	1.1
5.8	**490**	**0.86**	235.9	"	"	7900	-	6.9	415	1.0
16	**179**	**3.2**	87.08	**BF30-../D07LA4**	42	6200	-	19	150	3.8
14.5	**197**	**2.9**	95.79	"	"	6400	-	17	168	3.4
13	**220**	**2.6**	107.6	"	"	6700	-	15.5	184	3.1
11.5	**245**	**2.3**	118.3	"	"	7000	-	14	200	2.9
11	**260**	**2.2**	124.7	"	"	7100	-	13	220	2.6
9.9	**285**	**2.0**	137.1	"	"	7400	-	12	235	2.4
9.0	**315**	**1.85**	150.7	**BF30Z-../D07LA4**	45	7400	-	11	260	2.2
8.2	**345**	**1.65**	165.8	"	"	7400	-	9.8	290	2.0
7.7	**370**	**1.55**	176.6	"	"	7400	-	9.2	310	1.85
7.0	**405**	**1.4**	194.3	"	"	7400	-	8.4	340	1.7
6.1	**465**	**1.25**	224.8	"	"	7400	-	7.3	390	1.45
5.5	**520**	**1.1**	247.3	"	"	7400	-	6.6	430	1.35
5.2	**550**	**1.05**	263.5	"	"	7400	-	6.2	460	1.25
4.7	**600**	**0.96**	289.8	"	"	7400	-	5.6	510	1.15
4.4	**650**	**0.88**	310.7	"	"	7400	-	5.3	540	1.05
4.0	**710**	**0.81**	341.8	"	"	7400	-	4.8	590	0.97

P = 0.3 kW

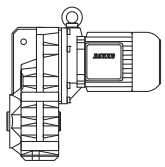

50 Hz			i	Type	m	F_{RN}	F_{RV}	60 Hz		
n_2	M_2	f_B						n_2	M_2	f_B
1/min	Nm				kg	N	N	1/min	Nm	
9.6	**295**	**3.1**	141.4	**BF40Z-../D07LA4**	55	10600	-	11.5	245	3.7
8.7	**325**	**2.8**	155.6	"	"	10600	-	10.5	270	3.3
7.9	**360**	**2.5**	171.2	"	"	10600	-	9.5	300	3.0
7.2	**395**	**2.3**	188.3	"	"	10600	-	8.7	325	2.8
6.7	**425**	**2.1**	202.2	"	"	10600	-	8.1	350	2.6
6.1	**465**	**1.95**	222.4	"	"	10600	-	7.3	390	2.3
5.4	**530**	**1.7**	253.2	"	"	10600	-	6.4	445	2.0
4.9	**580**	**1.55**	278.5	"	"	10600	-	5.9	485	1.85
4.6	**620**	**1.45**	295.1	"	"	10600	-	5.5	520	1.75
4.2	**680**	**1.3**	324.7	"	"	10600	-	5.0	570	1.6
3.9	**730**	**1.25**	346.8	"	"	10600	-	4.7	600	1.5
3.6	**790**	**1.15**	381.5	"	"	10600	-	4.3	660	1.35
3.3	**860**	**1.05**	417.3	"	"	10600	-	3.9	730	1.25
3.0	**950**	**0.95**	459.1	"	"	10600	-	3.6	790	1.15
2.7	**1060**	**0.85**	514.6	"	"	10600	-	3.2	890	1.0
2.3	**1050**	**0.95**	597.3	**BF40G10-../D07LA4**	61	10600	-	2.8	830	1.2
6.6	**430**	**3.0**	205.2	**BF50Z-../D07LA4**	85	13600	-	7.9	360	3.6
5.5	**520**	**2.5**	247.5	"	"	13600	-	6.6	430	3.0
4.9	**580**	**2.2**	276.8	"	"	13600	-	5.9	485	2.7
4.3	**660**	**1.95**	316.6	"	"	13600	-	5.2	550	2.4
3.9	**730**	**1.8**	354.0	"	"	13600	-	4.6	620	2.1
3.5	**810**	**1.6**	392.8	"	"	13600	-	4.2	680	1.9
3.1	**920**	**1.4**	439.3	"	"	13600	-	3.7	770	1.7
2.8	**1020**	**1.25**	496.4	"	"	13600	-	3.3	860	1.5
2.5	**1140**	**1.15**	555.2	"	"	13600	-	3.0	950	1.35
2.0	**1240**	**1.15**	680.9	**BF50G10-../D07LA4**	89	13600	-	2.4	1000	1.4
1.6	**1580**	**0.89**	864.5	"	"	13600	-	1.9	1300	1.1
2.4	**950**	**2.6**	569.3	**BF60G20-../D07LA4**	136	15300	43300	2.9	740	3.4
2.0	**1140**	**2.2**	689.0	"	"	15300	43300	2.4	900	2.8
1.7	**1370**	**1.8**	813.2	"	"	15300	43300	2.0	1120	2.2
1.5	**1630**	**1.55**	937.6	"	"	15300	43300	1.8	1310	1.9
1.2	**2050**	**1.2**	1211	"	"	15300	43300	1.4	1740	1.45
1.4	**1740**	**3.3**	1017	**BF70G20-../D07LA4**	215	16100	47700	1.6	1490	3.8
1.0	**2500**	**2.3**	1390	"	"	16100	47700	1.2	2000	2.9
0.85	**2950**	**1.95**	1621	"	"	16100	47700	1.0	2450	2.3
0.75	**3350**	**1.7**	1912	"	"	16100	47700	0.85	2900	1.95
0.6	**4250**	**1.35**	2448	"	"	16100	47700	0.7	3600	1.6
0.48	**5400**	**1.05**	2849	"	"	16100	47700	0.6	4250	1.35

P = 0.37 kW

50 Hz			i	Type	m	F_{RN}	F_{RV}	60 Hz		
n_2	M_2	f_B						n_2	M_2	f_B
1/min	Nm				kg	N	N	1/min	Nm	
177	**19.9**	**3.4**	7.66	**BF06-../D07LA4**	14	1800	-	215	16.4	4.1
147	**24**	**2.9**	9.21	"	"	1900	-	176	20	3.5
112	**31.5**	**2.4**	12.07	"	"	2000	-	135	26	2.9
96	**36.5**	**2.3**	14.21	"	"	2100	-	115	30.5	2.8
80	**44**	**2.2**	16.99	"	"	2500	-	96	36.5	2.6
67	**52**	**1.85**	20.42	"	"	2700	-	80	44	2.2
51	**69**	**1.4**	26.76	"	"	3000	-	61	57	1.65
43	**82**	**1.15**	31.50	"	"	3200	-	52	67	1.4
36	**98**	**0.97**	37.69	"	"	3500	-	43	82	1.15
29.5	**119**	**0.8**	46.14	"	"	3800	-	35.5	99	0.96
47.5	**74**	**3.2**	28.47	**BF10-../D07LA4**	26	3450	-	57	61	3.9
43.5	**81**	**3.0**	31.31	"	"	3600	-	52	67	3.6
37.5	**94**	**2.6**	36.15	"	"	3800	-	45	78	3.1

BF-series paralle shaft geared motors

Selection - parallel shaft geared motors DHE - IE2

P = 0.37 kW

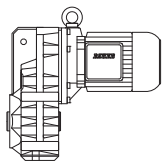

50 Hz			i	Type	m	F_{RN}	F_{RV}	60 Hz		
n_2	M_2	f_B						n_2	M_2	f_B
1/min	Nm				kg	N	N	1/min	Nm	
34	**103**	**2.3**	39.75	**BF10-../D07LA4**	"	3950	-	41	86	2.8
31.5	**112**	**2.1**	43.06	"	"	4100	-	38	92	2.6
29	**121**	**2.0**	47.35	"	"	4250	-	34.5	102	2.4
26.5	**133**	**1.8**	51.28	"	"	4400	-	32	110	2.2
24	**147**	**1.65**	56.39	"	"	4550	-	29	121	2.0
22	**160**	**1.5**	61.55	"	"	4700	-	26.5	133	1.8
20	**176**	**1.35**	67.69	"	"	4900	-	24	147	1.65
17.5	**200**	**1.2**	77.55	"	"	5100	-	21	168	1.45
16	**220**	**1.1**	85.27	"	"	5300	-	19	185	1.3
15	**235**	**1.0**	90.91	"	"	5400	-	18	196	1.2
14	**250**	**0.96**	99.97	"	"	5600	-	16.5	210	1.15
12.5	**280**	**0.86**	112.3	"	"	5900	-	14.5	240	1.0
28	**126**	**3.3**	48.56	**BF20-../D07LA4**	32	5200	-	33.5	105	4.0
25.5	**138**	**3.0**	53.43	"	"	5500	-	30.5	115	3.7
23.5	**150**	**2.8**	58.24	"	"	5600	-	28	126	3.3
21.5	**164**	**2.6**	64.08	"	"	5900	-	25.5	138	3.0
19.5	**181**	**2.3**	69.70	"	"	6100	-	23.5	150	2.8
18	**196**	**2.1**	76.69	"	"	6300	-	21.5	164	2.6
15.5	**225**	**1.85**	87.31	"	"	6600	-	19	185	2.3
14.5	**240**	**1.75**	96.08	"	"	6900	-	17	205	2.0
13.5	**260**	**1.6**	100.2	"	"	7000	-	16.5	210	2.0
12.5	**280**	**1.5**	110.2	"	"	7300	-	15	235	1.8
11	**320**	**1.3**	123.5	"	"	7600	-	13.5	260	1.6
10	**350**	**1.2**	135.9	"	"	7900	-	12	290	1.45
9.6	**365**	**1.15**	141.2	**BF20Z-../D07LA4**	34	7900	-	11.5	305	1.4
8.7	**405**	**1.05**	155.4	"	"	7900	-	10.5	335	1.25
8.3	**425**	**0.99**	164.3	"	"	7900	-	9.9	355	1.2
7.5	**470**	**0.89**	180.8	"	"	7900	-	9.0	390	1.1
6.9	**510**	**0.82**	197.1	"	"	7900	-	8.3	425	0.99
20.5	**172**	**3.3**	67.28	**BF30-../D07LA4**	42	5500	-	24.5	144	4.0
19	**185**	**3.1**	72.13	"	"	5700	-	22.5	157	3.7
17.5	**200**	**2.9**	79.34	"	"	5900	-	20.5	172	3.3
16	**220**	**2.6**	87.08	"	"	6200	-	19	185	3.1
14.5	**240**	**2.4**	95.79	"	"	6400	-	17	205	2.8
13	**270**	**2.1**	107.6	"	"	6700	-	15.5	225	2.6
11.5	**305**	**1.9**	118.3	"	"	7000	-	14	250	2.3
11	**320**	**1.8**	124.7	"	"	7100	-	13	270	2.1
9.9	**355**	**1.6**	137.1	"	"	7400	-	12	290	2.0
9.0	**390**	**1.45**	150.7	**BF30Z-../D07LA4**	45	7400	-	11	320	1.8
8.2	**430**	**1.35**	165.8	"	"	7400	-	9.8	360	1.6
7.7	**455**	**1.25**	176.6	"	"	7400	-	9.2	380	1.5
7.0	**500**	**1.15**	194.3	"	"	7400	-	8.4	420	1.35
6.1	**570**	**1.0**	224.8	"	"	7400	-	7.3	480	1.2
5.5	**640**	**0.9**	247.3	"	"	7400	-	6.6	530	1.1
5.2	**670**	**0.86**	263.5	"	"	7400	-	6.2	560	1.05
9.6	**365**	**2.5**	141.4	**BF40Z-../D07LA4**	55	10600	-	11.5	305	3.0
8.7	**405**	**2.2**	155.6	"	"	10600	-	10.5	335	2.7
7.9	**445**	**2.0**	171.2	"	"	10600	-	9.5	370	2.4
7.2	**490**	**1.85**	188.3	"	"	10600	-	8.7	405	2.2
6.7	**520**	**1.75**	202.2	"	"	10600	-	8.1	435	2.1
6.1	**570**	**1.6**	222.4	"	"	10600	-	7.3	480	1.9
5.4	**650**	**1.4**	253.2	"	"	10600	-	6.4	550	1.65
4.9	**720**	**1.25**	278.5	"	"	10600	-	5.9	590	1.55
4.6	**760**	**1.2**	295.1	"	"	10600	-	5.5	640	1.4
4.2	**840**	**1.05**	324.7	"	"	10600	-	5.0	700	1.3
3.9	**900**	**1.0**	346.8	"	"	10600	-	4.7	750	1.2
3.6	**980**	**0.92**	381.5	"	"	10600	-	4.3	820	1.1
3.3	**1070**	**0.84**	417.3	"	"	10600	-	3.9	900	1.0

P = 0.37 kW

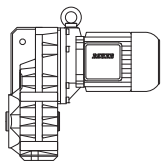

50 Hz			i	Type	m	F_{RN}	F_{RV}	60 Hz		
n_2	M_2	f_B						n_2	M_2	f_B
1/min	Nm				kg	N	N	1/min	Nm	
8.8	**400**	**3.3**	154.5	**BF50Z-../D07LA4**	85	13600	-	10.5	335	3.9
7.4	**475**	**2.7**	183.5	"	"	13600	-	8.9	395	3.3
6.6	**530**	**2.5**	205.2	"	"	13600	-	7.9	445	2.9
5.5	**640**	**2.0**	247.5	"	"	13600	-	6.6	530	2.5
4.9	**720**	**1.8**	276.8	"	"	13600	-	5.9	590	2.2
4.3	**820**	**1.6**	316.6	"	"	13600	-	5.2	670	1.95
3.9	**900**	**1.45**	354.0	"	"	13600	-	4.6	760	1.7
3.5	**1000**	**1.3**	392.8	"	"	13600	-	4.2	840	1.55
3.1	**1130**	**1.15**	439.3	"	"	13600	-	3.7	950	1.35
2.8	**1260**	**1.05**	496.4	"	"	13600	-	3.3	1070	1.2
2.5	**1410**	**0.92**	555.2	"	"	13600	-	3.0	1170	1.1
2.0	**1570**	**0.89**	680.9	**BF50G10-../D07LA4**	89	13600	-	2.4	1280	1.1
2.4	**1230**	**2.0**	569.3	**BF60G20-../D07LA4**	136	15300	43300	2.9	970	2.6
2.0	**1470**	**1.7**	689.0	"	"	15300	43300	2.4	1180	2.1
1.7	**1770**	**1.4**	813.2	"	"	15300	43300	2.0	1460	1.7
1.5	**2050**	**1.2**	937.6	"	"	15300	43300	1.8	1680	1.5
1.2	**2600**	**0.96**	1211	"	"	15300	43300	1.4	2200	1.15
1.6	**1950**	**2.9**	872.1	**BF70G20-../D07LA4**	215	16100	47700	1.9	1600	3.6
1.4	**2200**	**2.6**	1017	"	"	16100	47700	1.6	1900	3.0
1.0	**3150**	**1.8**	1390	"	"	16100	47700	1.2	2550	2.2
0.85	**3700**	**1.55**	1621	"	"	16100	47700	1.0	3100	1.85
0.75	**4250**	**1.35**	1912	"	"	16100	47700	0.85	3700	1.55
0.6	**5400**	**1.05**	2448	"	"	16100	47700	0.7	4550	1.25

P = 0.55 kW

50 Hz			i	Type	m	F_{RN}	F_{RV}	60 Hz		
n_2	M_2	f_B						n_2	M_2	f_B
1/min	Nm				kg	N	N	1/min	Nm	
245	**21**	**3.0**	5.72	**BF06-../D08MA4**	16	1630	-	295	17.8	3.5
183	**28.5**	**2.4**	7.66	"	"	1800	-	220	23.5	2.9
153	**34**	**2.1**	9.21	"	"	1900	-	183	28.5	2.5
116	**45**	**1.65**	12.07	"	"	2000	-	140	37.5	2.0
99	**53**	**1.6**	14.21	"	"	2100	-	119	44	1.95
83	**63**	**1.5**	16.99	"	"	2500	-	99	53	1.8
69	**76**	**1.25**	20.42	"	"	2700	-	83	63	1.5
53	**99**	**0.96**	26.76	"	"	3000	-	63	83	1.15
44.5	**118**	**0.81**	31.50	"	"	3200	-	54	97	0.98
94	**55**	**3.3**	15.04	**BF10-../D08MA4**	27	2800	-	112	46.5	3.9
70	**75**	**3.2**	20.05	"	"	3000	-	84	62	3.9
61	**86**	**2.8**	23.28	"	"	3200	-	73	71	3.4
55	**95**	**2.5**	25.60	"	"	3350	-	66	79	3.0
49.5	**106**	**2.3**	28.47	"	"	3450	-	60	87	2.8
45	**116**	**2.1**	31.31	"	"	3600	-	54	97	2.5
39	**134**	**1.8**	36.15	"	"	3800	-	46.5	112	2.1
35.5	**147**	**1.65**	39.75	"	"	3950	-	42.5	123	1.95
33	**159**	**1.5**	43.06	"	"	4100	-	39.5	132	1.8
30	**175**	**1.35**	47.35	"	"	4250	-	35.5	147	1.65
27.5	**191**	**1.25**	51.28	"	"	4400	-	33	159	1.5
25	**210**	**1.15**	56.39	"	"	4550	-	30	175	1.35
23	**225**	**1.05**	61.55	"	"	4700	-	27.5	191	1.25
21	**250**	**0.96**	67.69	"	"	4900	-	25	210	1.15
18.5	**280**	**0.86**	77.55	"	"	5100	-	22	235	1.0
39.5	**132**	**3.2**	35.85	**BF20-../D08MA4**	33	4650	-	47	111	3.8
34	**154**	**2.7**	41.72	"	"	4950	-	40.5	129	3.3
31	**169**	**2.5**	45.90	"	"	5100	-	37	141	3.0
29	**181**	**2.3**	48.56	"	"	5200	-	35	150	2.8

P = 0.55 kW

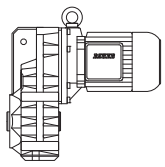

50 Hz			i	Type	m	F_{RN}	F_{RV}	60 Hz		
n_2	M_2	f_B						n_2	M_2	f_B
1/min	Nm				kg	N	N	1/min	Nm	
26.5	**198**	**2.1**	53.43	**BF20-../D08MA4**	"	5500	-	31.5	166	2.5
24.5	**210**	**2.0**	58.24	"	"	5600	-	29	181	2.3
22	**235**	**1.8**	64.08	"	"	5900	-	26.5	198	2.1
20.5	**255**	**1.65**	69.70	"	"	6100	-	24.5	210	2.0
18.5	**280**	**1.5**	76.69	"	"	6300	-	22	235	1.8
16.5	**315**	**1.35**	87.31	"	"	6600	-	19.5	265	1.6
15	**350**	**1.2**	96.08	"	"	6900	-	17.5	300	1.4
14	**375**	**1.1**	100.2	"	"	7000	-	17	305	1.4
13	**400**	**1.05**	110.2	"	"	7300	-	15.5	335	1.25
11.5	**455**	**0.92**	123.5	"	"	7600	-	14	375	1.1
10.5	**500**	**0.84**	135.9	"	"	7900	-	12.5	420	1.0
10	**520**	**0.81**	141.2	**BF20Z-../D08MA4**	35	7900	-	12	435	0.97
27	**194**	**3.0**	52.20	**BF30-../D08MA4**	43	5000	-	32.5	161	3.6
24.5	**210**	**2.7**	57.41	"	"	5200	-	29.5	178	3.2
23	**225**	**2.6**	61.17	"	"	5300	-	27.5	191	3.0
21	**250**	**2.3**	67.28	"	"	5500	-	25	210	2.7
19.5	**265**	**2.2**	72.13	"	"	5700	-	23.5	220	2.6
18	**290**	**2.0**	79.34	"	"	5900	-	21.5	240	2.4
16.5	**315**	**1.85**	87.08	"	"	6200	-	19.5	265	2.2
15	**350**	**1.65**	95.79	"	"	6400	-	18	290	2.0
13.5	**385**	**1.5**	107.6	"	"	6700	-	16	325	1.75
12	**435**	**1.3**	118.3	"	"	7000	-	14.5	360	1.6
11.5	**455**	**1.25**	124.7	"	"	7100	-	13.5	385	1.5
10.5	**500**	**1.15**	137.1	"	"	7400	-	12.5	420	1.35
9.3	**560**	**1.05**	150.7	**BF30Z-../D08MA4**	46	7400	-	11.5	455	1.25
8.5	**610**	**0.94**	165.8	"	"	7400	-	10.5	500	1.15
8.0	**650**	**0.88**	176.6	"	"	7400	-	9.6	540	1.05
7.3	**710**	**0.81**	194.3	"	"	7400	-	8.7	600	0.96
18	**290**	**3.1**	78.55	**BF40-../D08MA4**	53	8500	-	21.5	240	3.8
17	**305**	**3.0**	83.91	"	"	8700	-	20.5	255	3.5
15.5	**335**	**2.7**	92.31	"	"	9100	-	18.5	280	3.2
14	**375**	**2.4**	101.0	"	"	9400	-	17	305	3.0
13	**400**	**2.3**	111.1	"	"	9800	-	15.5	335	2.7
11.5	**455**	**2.0**	124.5	"	"	10200	-	13.5	385	2.3
10.5	**500**	**1.8**	137.0	"	"	10600	-	12.5	420	2.1
10	**520**	**1.75**	141.4	**BF40Z-../D08MA4**	56	10600	-	12	435	2.1
9.0	**580**	**1.55**	155.6	"	"	10600	-	11	475	1.9
8.2	**640**	**1.4**	171.2	"	"	10600	-	9.9	530	1.7
7.5	**700**	**1.3**	188.3	"	"	10600	-	9.0	580	1.55
7.0	**750**	**1.2**	202.2	"	"	10600	-	8.4	620	1.45
6.3	**830**	**1.1**	222.4	"	"	10600	-	7.6	690	1.3
5.6	**930**	**0.97**	253.2	"	"	10600	-	6.7	780	1.15
5.1	**1020**	**0.88**	278.5	"	"	10600	-	6.1	860	1.05
4.8	**1090**	**0.83**	295.1	"	"	10600	-	5.7	920	0.98
12.5	**420**	**3.1**	114.0	**BF50-../D08MA4**	81	12900	-	15	350	3.7
11	**475**	**2.7**	127.5	"	"	13600	-	13.5	385	3.4
10.5	**500**	**2.6**	138.1	**BF50Z-../D08MA4**	86	13600	-	12.5	420	3.1
9.1	**570**	**2.3**	154.5	"	"	13600	-	11	475	2.7
7.7	**680**	**1.9**	183.5	"	"	13600	-	9.2	570	2.3
6.9	**760**	**1.7**	205.2	"	"	13600	-	8.2	640	2.0
5.7	**920**	**1.4**	247.5	"	"	13600	-	6.8	770	1.7
5.1	**1020**	**1.25**	276.8	"	"	13600	-	6.1	860	1.5
4.5	**1160**	**1.1**	316.6	"	"	13600	-	5.4	970	1.35
4.0	**1310**	**0.99**	354.0	"	"	13600	-	4.8	1090	1.2
3.6	**1450**	**0.9**	392.8	"	"	13600	-	4.3	1220	1.05
7.5	**700**	**3.3**	187.7	**BF60Z-../D08MA4**	130	15300	43300	9.0	580	4.0
6.4	**820**	**2.8**	221.4	"	"	15300	43300	7.6	690	3.3
5.8	**900**	**2.6**	245.6	"	"	15300	43300	6.9	760	3.0
4.8	**1090**	**2.1**	293.4	"	"	15300	43300	5.8	900	2.6

P = 0.55 kW

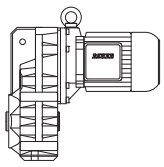

50 Hz			i	Type	m	F_{RN}	F_{RV}	60 Hz		
n_2	M_2	f_B						n_2	M_2	f_B
1/min	Nm				kg	N	N	1/min	Nm	
4.3	**1220**	**1.9**	325.6	**BF60Z-../D08MA4**	"	15300	43300	5.2	1010	2.3
3.7	**1410**	**1.65**	380.0	"	"	15300	43300	4.5	1160	2.0
3.4	**1540**	**1.5**	421.6	"	"	15300	43300	4.0	1310	1.75
3.1	**1690**	**1.35**	459.9	"	"	15300	43300	3.7	1410	1.65
2.8	**1870**	**1.25**	510.3	"	"	15300	43300	3.3	1590	1.45
2.5	**1860**	**1.35**	569.3	**BF60G20-../D08MA4**	137	15300	43300	3.0	1510	1.65
2.1	**2200**	**1.15**	689.0	"	"	15300	43300	2.5	1810	1.4
1.8	**2600**	**0.96**	813.2	"	"	15300	43300	2.1	2150	1.15
3.2	**1640**	**3.2**	439.2	**BF70Z-../D08MA4**	218	16100	47700	3.9	1340	3.9
2.8	**1870**	**2.8**	512.4	"	"	16100	47700	3.3	1590	3.3
2.7	**1720**	**3.3**	524.1	**BF70G20-../D08MA4**	216	16100	47700	3.3	1370	4.2
2.5	**1850**	**3.1**	577.5	"	"	16100	47700	3.0	1500	3.8
2.1	**2200**	**2.6**	673.6	"	"	16100	47700	2.5	1810	3.1
1.7	**2800**	**2.0**	872.1	"	"	16100	47700	2.0	2350	2.4
1.4	**3450**	**1.65**	1017	"	"	16100	47700	1.7	2750	2.1
1.1	**4400**	**1.3**	1390	"	"	16100	47700	1.3	3650	1.55
0.9	**5400**	**1.05**	1621	"	"	16100	47700	1.1	4350	1.3
1.5	**3500**	**3.0**	990.4	**BF80Z-../D08MA4**	334	39600	75000	1.7	3050	3.4
1.3	**4000**	**2.6**	1124	"	"	39600	75000	1.5	3500	3.0
1.1	**3300**	**3.2**	1329	**BF80G40-../D08MA4**	340	39600	75000	1.3	2550	4.1
0.95	**4100**	**2.6**	1491	"	"	39600	75000	1.2	2950	3.6
0.85	**4550**	**2.3**	1693	"	"	39600	75000	1.0	3650	2.9
0.7	**5900**	**1.8**	2051	"	"	39600	75000	0.85	4550	2.3
0.6	**7100**	**1.5**	2422	"	"	39600	75000	0.7	5900	1.8
0.55	**7500**	**1.4**	2785	"	"	39600	75000	0.65	6000	1.75
0.46	**9300**	**1.15**	3092	"	"	39600	75000	0.55	7400	1.4
0.65	**6000**	**3.1**	2154	**BF90G50-../D08MA4**	610	42800	120000	0.8	4500	4.1
0.55	**7100**	**2.6**	2656	"	"	42800	120000	0.65	5700	3.2
0.48	**8600**	**2.2**	2952	"	"	42800	120000	0.6	6500	2.8
0.43	**9700**	**1.9**	3286	"	"	42800	120000	0.55	7000	2.6
0.39	**10900**	**1.7**	3644	"	"	42800	120000	0.47	8600	2.2
0.33	**13400**	**1.4**	4366	"	"	42800	120000	0.39	10900	1.7
0.29	**15600**	**1.2**	4839	"	"	42800	120000	0.35	12500	1.5

P = 0.75 kW

50 Hz			i	Type	m	F_{RN}	F_{RV}	60 Hz		
n_2	M_2	f_B						n_2	M_2	f_B
1/min	Nm				kg	N	N	1/min	Nm	
250	**28.5**	**2.2**	5.72	**BF06-../DHE08XA4**	18	1630	-	300	23.5	2.6
186	**38.5**	**1.75**	7.66	"	"	1800	-	225	31.5	2.2
155	**46**	**1.5**	9.21	"	"	1900	-	186	38.5	1.8
118	**60**	**1.25**	12.07	"	"	2000	-	142	50	1.5
100	**71**	**1.2**	14.21	"	"	2100	-	121	59	1.45
84	**85**	**1.1**	16.99	"	"	2500	-	101	70	1.35
70	**102**	**0.93**	20.42	"	"	2700	-	84	85	1.1
120	**59**	**3.1**	11.84	**BF10-../DHE08XA4**	30	2500	-	145	49	3.7
95	**75**	**2.4**	15.04	"	"	2800	-	114	62	3.0
78	**91**	**2.6**	18.23	"	"	2900	-	94	76	3.2
71	**100**	**2.4**	20.05	"	"	3000	-	86	83	2.9
61	**117**	**2.1**	23.28	"	"	3200	-	74	96	2.5
56	**127**	**1.9**	25.60	"	"	3350	-	67	106	2.3
50	**143**	**1.7**	28.47	"	"	3450	-	61	117	2.1
45.5	**157**	**1.55**	31.31	"	"	3600	-	55	130	1.85
39.5	**181**	**1.35**	36.15	"	"	3800	-	47.5	150	1.6
36	**198**	**1.2**	39.75	"	"	3950	-	43.5	164	1.45
33	**215**	**1.1**	43.06	"	"	4100	-	40	179	1.35

P = 0.75 kW

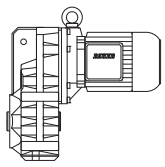

50 Hz			i	Type	m	F_{RN}	F_{RV}	60 Hz		
n_2	M_2	f_B						n_2	M_2	f_B
1/min	Nm				kg	N	N	1/min	Nm	
30	**235**	**1.0**	47.35	**BF10-../DHE08XA4**	"	4250	-	36.5	196	1.2
28	**255**	**0.94**	51.28	"	"	4400	-	33.5	210	1.15
25.5	**280**	**0.86**	56.39	"	"	4550	-	30.5	230	1.05
23.5	**300**	**0.8**	61.55	"	"	4700	-	28	255	0.94
59	**121**	**3.3**	24.25	**BF20-../DHE08XA4**	36	3950	-	71	100	4.0
52	**137**	**3.1**	27.62	"	"	4150	-	62	115	3.7
47	**152**	**2.8**	30.40	"	"	4400	-	57	125	3.4
44	**162**	**2.6**	32.58	"	"	4450	-	53	135	3.1
40	**179**	**2.3**	35.85	"	"	4650	-	48	149	2.8
34.5	**205**	**2.0**	41.72	"	"	4950	-	41	174	2.4
31	**230**	**1.85**	45.90	"	"	5100	-	37.5	191	2.2
29.5	**240**	**1.75**	48.56	"	"	5200	-	35.5	200	2.1
27	**265**	**1.6**	53.43	"	"	5500	-	32.5	220	1.9
24.5	**290**	**1.45**	58.24	"	"	5600	-	29.5	240	1.75
22.5	**315**	**1.35**	64.08	"	"	5900	-	27	265	1.6
20.5	**345**	**1.2**	69.70	"	"	6100	-	25	285	1.45
19	**375**	**1.1**	76.69	"	"	6300	-	22.5	315	1.35
16.5	**430**	**0.98**	87.31	"	"	6600	-	20	355	1.2
14.5	**490**	**0.86**	100.2	"	"	7000	-	17.5	405	1.05
41	**174**	**3.3**	35.00	**BF30-../DHE08XA4**	46	4200	-	49	146	3.9
37	**193**	**3.0**	38.49	"	"	4400	-	44.5	160	3.6
35	**200**	**2.9**	41.01	"	"	4500	-	42	170	3.4
31.5	**225**	**2.6**	45.10	"	"	4700	-	38	188	3.1
27.5	**260**	**2.2**	52.20	"	"	5000	-	33	215	2.7
25	**285**	**2.0**	57.41	"	"	5200	-	30	235	2.4
23.5	**300**	**1.9**	61.17	"	"	5300	-	28	255	2.3
21.5	**330**	**1.75**	67.28	"	"	5500	-	25.5	280	2.1
20	**355**	**1.6**	72.13	"	"	5700	-	24	295	1.95
18	**395**	**1.45**	79.34	"	"	5900	-	22	325	1.75
16.5	**430**	**1.35**	87.08	"	"	6200	-	20	355	1.6
15	**475**	**1.2**	95.79	"	"	6400	-	18	395	1.45
13.5	**530**	**1.1**	107.6	"	"	6700	-	16	445	1.3
12.5	**570**	**1.0**	118.3	"	"	7000	-	14.5	490	1.15
11.5	**620**	**0.93**	124.7	"	"	7100	-	14	510	1.15
10.5	**680**	**0.85**	137.1	"	"	7400	-	12.5	570	1.0
26.5	**270**	**3.3**	53.82	**BF40-../DHE08XA4**	55	7200	-	32	220	4.1
23.5	**300**	**3.0**	61.25	"	"	7600	-	28	255	3.5
21.5	**330**	**2.7**	67.38	"	"	8000	-	25.5	280	3.2
20	**355**	**2.5**	71.40	"	"	8100	-	24	295	3.1
18.5	**385**	**2.3**	78.55	"	"	8500	-	22	325	2.8
17	**420**	**2.1**	83.91	"	"	8700	-	20.5	345	2.6
15.5	**460**	**1.95**	92.31	"	"	9100	-	19	375	2.4
14.5	**490**	**1.85**	101.0	"	"	9400	-	17	420	2.1
13	**550**	**1.65**	111.1	"	"	9800	-	15.5	460	1.95
11.5	**620**	**1.45**	124.5	"	"	10200	-	14	510	1.75
10.5	**680**	**1.3**	137.0	"	"	10600	-	12.5	570	1.6
9.2	**770**	**1.15**	155.6	**BF40Z-../DHE08XA4**	59	10600	-	11	650	1.4
8.3	**860**	**1.05**	171.2	"	"	10600	-	10	710	1.25
7.6	**940**	**0.96**	188.3	"	"	10600	-	9.1	780	1.15
7.1	**1000**	**0.9**	202.2	"	"	10600	-	8.5	840	1.05
6.4	**1110**	**0.81**	222.4	"	"	10600	-	7.7	930	0.97
17.5	**405**	**3.2**	81.33	**BF50-../DHE08XA4**	84	11300	-	21.5	330	3.9
16	**445**	**2.9**	90.24	"	"	11800	-	19	375	3.5
14.5	**490**	**2.7**	100.9	"	"	12300	-	17	420	3.1
12.5	**570**	**2.3**	114.0	"	"	12900	-	15	475	2.7
11.5	**620**	**2.1**	127.5	"	"	13600	-	13.5	530	2.5

P = 0.75 kW

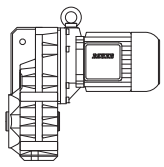

50 Hz			i	Type	m	F_{RN}	F_{RV}	60 Hz		
n_2	M_2	f_B						n_2	M_2	f_B
1/min	Nm				kg	N	N	1/min	Nm	
10.5	**680**	**1.9**	138.1	**BF50Z-../DHE08XA4**	88	13600	-	12.5	570	2.3
9.2	**770**	**1.7**	154.5	"	"	13600	-	11.5	620	2.1
7.8	**910**	**1.45**	183.5	"	"	13600	-	9.4	760	1.7
7.0	**1020**	**1.25**	205.2	"	"	13600	-	8.4	850	1.55
5.8	**1230**	**1.05**	247.5	"	"	13600	-	7.0	1020	1.25
5.2	**1370**	**0.95**	276.8	"	"	13600	-	6.2	1150	1.15
4.5	**1590**	**0.82**	316.6	"	"	13600	-	5.5	1300	1.0
8.4	**850**	**2.7**	169.2	**BF60Z-../DHE08XA4**	132	15300	43300	10.5	680	3.4
7.6	**940**	**2.4**	187.7	"	"	15300	43300	9.2	770	3.0
6.5	**1100**	**2.1**	221.4	"	"	15300	43300	7.8	910	2.5
5.8	**1230**	**1.85**	245.6	"	"	15300	43300	7.0	1020	2.3
4.9	**1460**	**1.6**	293.4	"	"	15300	43300	5.9	1210	1.9
4.4	**1620**	**1.4**	325.6	"	"	15300	43300	5.3	1350	1.7
3.8	**1880**	**1.2**	380.0	"	"	15300	43300	4.5	1590	1.45
3.4	**2100**	**1.1**	421.6	"	"	15300	43300	4.1	1740	1.3
3.1	**2300**	**1.0**	459.9	"	"	15300	43300	3.8	1880	1.2
2.8	**2550**	**0.9**	510.3	"	"	15300	43300	3.4	2100	1.1
2.5	**2600**	**0.96**	569.3	**BF60G20-../DHE08XA4**	140	15300	43300	3.1	2050	1.2
2.1	**3100**	**0.81**	689.0	"	"	15300	43300	2.5	2550	0.98
4.2	**1700**	**3.1**	341.7	**BF70Z-../DHE08XA4**	220	16100	47700	5.1	1400	3.7
3.6	**1980**	**2.6**	398.7	"	"	16100	47700	4.3	1660	3.1
3.3	**2150**	**2.4**	439.2	"	"	16100	47700	3.9	1830	2.8
2.8	**2550**	**2.0**	512.4	"	"	16100	47700	3.4	2100	2.5
2.5	**2600**	**2.2**	577.5	**BF70G20-../DHE08XA4**	218	16100	47700	3.0	2100	2.7
2.2	**2950**	**1.95**	673.6	"	"	16100	47700	2.6	2450	2.3
1.7	**3950**	**1.45**	872.1	"	"	16100	47700	2.0	3300	1.75
1.4	**4800**	**1.2**	1017	"	"	16100	47700	1.7	3900	1.45
1.1	**6100**	**0.93**	1390	"	"	16100	47700	1.3	5100	1.1
2.2	**3250**	**3.2**	662.1	**BF80Z-../DHE08XA4**	337	39600	75000	2.6	2750	3.8
1.9	**3750**	**2.8**	770.6	"	"	39600	75000	2.3	3100	3.4
1.7	**4200**	**2.5**	874.6	"	"	39600	75000	2.0	3550	3.0
1.5	**4750**	**2.2**	990.4	"	"	39600	75000	1.8	3950	2.7
1.3	**5500**	**1.9**	1124	"	"	39600	75000	1.6	4450	2.4
1.1	**5000**	**2.1**	1329	**BF80G40-../DHE08XA4**	342	39600	75000	1.3	4050	2.6
1.0	**5700**	**1.85**	1491	"	"	39600	75000	1.2	4550	2.3
0.85	**6800**	**1.55**	1693	"	"	39600	75000	1.1	4900	2.1
0.7	**8600**	**1.2**	2051	"	"	39600	75000	0.85	6800	1.55
0.6	**10300**	**1.0**	2422	"	"	39600	75000	0.75	7900	1.35
1.0	**5700**	**3.2**	1444	**BF90G50-../DHE08XA4**	613	42800	120000	1.2	4550	4.1
0.85	**6800**	**2.7**	1678	"	"	42800	120000	1.1	4900	3.8
0.8	**7100**	**2.6**	1867	"	"	42800	120000	0.95	5700	3.2
0.7	**8100**	**2.3**	2154	"	"	42800	120000	0.8	6800	2.7
0.55	**10600**	**1.75**	2656	"	"	42800	120000	0.65	8600	2.2
0.49	**12300**	**1.5**	2952	"	"	42800	120000	0.6	9600	1.95
0.44	**13700**	**1.35**	3286	"	"	42800	120000	0.55	10500	1.75
0.39	**15800**	**1.15**	3644	"	"	42800	120000	0.47	12700	1.45

BF-series paralle shaft geared motors

Selection - parallel shaft geared motors DHE - IE2

P = 1.1 kW

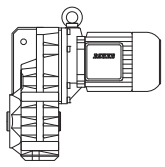

50 Hz			i	Type	m	F_{RN}	F_{RV}	60 Hz		
n_2	M_2	f_B						n_2	M_2	f_B
1/min	Nm				kg	N	N	1/min	Nm	
260	**40**	**3.5**	5.60	**BF10-../DHE09LA4**	36	1980	-	315	33	4.2
190	**55**	**2.8**	7.58	"	"	2200	-	230	45.5	3.4
149	**70**	**2.5**	9.69	"	"	2350	-	180	58	3.1
122	**86**	**2.1**	11.84	"	"	2500	-	147	71	2.6
96	**109**	**1.7**	15.04	"	"	2800	-	116	90	2.0
79	**132**	**1.8**	18.23	"	"	2900	-	96	109	2.2
72	**145**	**1.65**	20.05	"	"	3000	-	87	120	2.0
62	**169**	**1.4**	23.28	"	"	3200	-	75	140	1.7
57	**184**	**1.3**	25.60	"	"	3350	-	68	154	1.55
51	**205**	**1.15**	28.47	"	"	3450	-	62	169	1.4
46	**225**	**1.05**	31.31	"	"	3600	-	56	187	1.3
40	**260**	**0.92**	36.15	"	"	3800	-	48.5	215	1.1
36.5	**285**	**0.84**	39.75	"	"	3950	-	44	235	1.0
110	**95**	**3.0**	13.18	**BF20-../DHE09LA4**	42	3300	-	133	78	3.7
93	**112**	**2.8**	15.54	"	"	3450	-	112	93	3.3
86	**122**	**3.0**	16.77	"	"	3500	-	104	101	3.6
79	**132**	**2.8**	18.45	"	"	3600	-	95	110	3.4
66	**159**	**2.5**	22.04	"	"	3800	-	79	132	3.0
60	**175**	**2.3**	24.25	"	"	3950	-	72	145	2.8
53	**198**	**2.1**	27.62	"	"	4150	-	63	166	2.5
47.5	**220**	**1.9**	30.40	"	"	4400	-	58	181	2.3
44.5	**235**	**1.8**	32.58	"	"	4450	-	54	194	2.2
40.5	**255**	**1.65**	35.85	"	"	4650	-	49	210	2.0
35	**300**	**1.4**	41.72	"	"	4950	-	42	250	1.7
31.5	**330**	**1.25**	45.90	"	"	5100	-	38	275	1.55
30	**350**	**1.2**	48.56	"	"	5200	-	36	290	1.45
27	**385**	**1.1**	53.43	"	"	5500	-	33	315	1.35
25	**420**	**1.0**	58.24	"	"	5600	-	30	350	1.2
22.5	**465**	**0.9**	64.08	"	"	5900	-	27.5	380	1.1
21	**500**	**0.84**	69.70	"	"	6100	-	25	420	1.0
66	**159**	**3.3**	21.85	**BF30-../DHE09LA4**	53	3500	-	80	131	4.0
60	**175**	**3.2**	24.03	"	"	3600	-	73	143	3.9
52	**200**	**2.9**	28.23	"	"	3800	-	62	169	3.4
46.5	**225**	**2.6**	31.05	"	"	4000	-	57	184	3.1
41.5	**250**	**2.3**	35.00	"	"	4200	-	50	210	2.7
37.5	**280**	**2.1**	38.49	"	"	4400	-	45.5	230	2.5
35.5	**295**	**1.95**	41.01	"	"	4500	-	42.5	245	2.3
32	**325**	**1.75**	45.10	"	"	4700	-	39	265	2.2
28	**375**	**1.55**	52.20	"	"	5000	-	33.5	310	1.85
25.5	**410**	**1.4**	57.41	"	"	5200	-	30.5	340	1.7
24	**435**	**1.3**	61.17	"	"	5300	-	28.5	365	1.6
21.5	**485**	**1.2**	67.28	"	"	5500	-	26	400	1.45
20	**520**	**1.1**	72.13	"	"	5700	-	24.5	425	1.35
18.5	**560**	**1.05**	79.34	"	"	5900	-	22	475	1.2
17	**610**	**0.94**	87.08	"	"	6200	-	20	520	1.1
15.5	**670**	**0.86**	95.79	"	"	6400	-	18.5	560	1.05
38.5	**270**	**3.3**	37.64	**BF40-../DHE09LA4**	62	6200	-	46.5	225	4.0
35	**300**	**3.0**	41.42	"	"	6500	-	42.5	245	3.7
32	**325**	**2.8**	45.56	"	"	6800	-	38.5	270	3.3
29.5	**355**	**2.5**	48.92	"	"	7000	-	36	290	3.1
27	**385**	**2.3**	53.82	"	"	7200	-	32.5	320	2.8
24	**435**	**2.1**	61.25	"	"	7600	-	28.5	365	2.5
21.5	**485**	**1.85**	67.38	"	"	8000	-	26	400	2.3
20.5	**510**	**1.75**	71.40	"	"	8100	-	24.5	425	2.1
18.5	**560**	**1.6**	78.55	"	"	8500	-	22.5	465	1.95
17.5	**600**	**1.5**	83.91	"	"	8700	-	21	500	1.8
16	**650**	**1.4**	92.31	"	"	9100	-	19	550	1.65
14.5	**720**	**1.25**	101.0	"	"	9400	-	17.5	600	1.5
13	**800**	**1.15**	111.1	"	"	9800	-	16	650	1.4
12	**870**	**1.05**	124.5	"	"	10200	-	14	750	1.2
11	**950**	**0.95**	137.0	"	"	10600	-	13	800	1.15

P = 1.1 kW

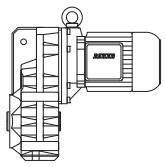

50 Hz			i	Type	m	F_{RN}	F_{RV}	60 Hz		
n_2	M_2	f_B						n_2	M_2	f_B
1/min	Nm				kg	N	N	1/min	Nm	
10.5	**1000**	**0.9**	141.4	**BF40Z-../DHE09LA4**	66	10600	-	12.5	840	1.05
9.3	**1120**	**0.8**	155.6	"	"	10600	-	11.5	910	0.99
25.5	**410**	**3.2**	56.86	**BF50-../DHE09LA4**	90	9300	-	31	335	3.9
23	**455**	**2.9**	63.59	"	"	9800	-	27.5	380	3.4
20	**520**	**2.5**	72.72	"	"	10700	-	24	435	3.0
18	**580**	**2.2**	81.33	"	"	11300	-	21.5	485	2.7
16	**650**	**2.0**	90.24	"	"	11800	-	19.5	530	2.5
14.5	**720**	**1.8**	100.9	"	"	12300	-	17.5	600	2.2
13	**800**	**1.65**	114.0	"	"	12900	-	15.5	670	1.95
11.5	**910**	**1.45**	127.5	"	"	13600	-	14	750	1.75
10.5	**1000**	**1.3**	138.1	**BF50Z-../DHE09LA4**	95	13600	-	13	800	1.65
9.4	**1110**	**1.15**	154.5	"	"	13600	-	11.5	910	1.45
7.9	**1320**	**0.98**	183.5	"	"	13600	-	9.5	1100	1.2
7.1	**1470**	**0.88**	205.2	"	"	13600	-	8.5	1230	1.05
14	**750**	**3.1**	103.7	**BF60-../DHE09LA4**	120	14100	39900	17	610	3.8
13	**800**	**2.9**	113.1	"	"	14600	41300	15.5	670	3.4
11.5	**910**	**2.5**	125.5	"	"	15300	43300	14	750	3.1
10.5	**1000**	**2.3**	140.8	**BF60Z-../DHE09LA4**	139	15300	43300	12.5	840	2.7
8.6	**1220**	**1.9**	169.2	"	"	15300	43300	10.5	1000	2.3
7.7	**1360**	**1.7**	187.7	"	"	15300	43300	9.3	1120	2.1
6.6	**1590**	**1.45**	221.4	"	"	15300	43300	7.9	1320	1.75
5.9	**1780**	**1.3**	245.6	"	"	15300	43300	7.1	1470	1.55
5.0	**2100**	**1.1**	293.4	"	"	15300	43300	6.0	1750	1.3
4.5	**2300**	**1.0**	325.6	"	"	15300	43300	5.4	1940	1.2
3.8	**2750**	**0.84**	380.0	"	"	15300	43300	4.6	2250	1.0
6.2	**1690**	**3.1**	233.0	**BF70Z-../DHE09LA4**	227	16100	47700	7.5	1400	3.7
5.6	**1870**	**2.8**	258.7	"	"	16100	47700	6.8	1540	3.4
4.8	**2150**	**2.4**	301.8	"	"	16100	47700	5.8	1810	2.9
4.3	**2400**	**2.2**	341.7	"	"	16100	47700	5.1	2050	2.5
3.7	**2800**	**1.85**	398.7	"	"	16100	47700	4.4	2350	2.2
3.3	**3150**	**1.65**	439.2	"	"	16100	47700	4.0	2600	2.0
2.9	**3600**	**1.45**	512.4	"	"	16100	47700	3.4	3050	1.7
2.8	**3500**	**1.65**	524.1	**BF70G20-../DHE09LA4**	225	16100	47700	3.4	2850	2.0
2.5	**3950**	**1.45**	577.5	"	"	16100	47700	3.1	3100	1.85
2.2	**4450**	**1.3**	673.6	"	"	16100	47700	2.6	3750	1.5
1.7	**5900**	**0.97**	872.1	"	"	16100	47700	2.0	4950	1.15
1.5	**6700**	**0.85**	1017	"	"	16100	47700	1.8	5500	1.05
3.2	**3250**	**3.2**	450.4	**BF80Z-../DHE09LA4**	344	39600	75000	3.9	2650	4.0
2.9	**3600**	**2.9**	511.2	"	"	39600	75000	3.5	3000	3.5
2.5	**4200**	**2.5**	583.4	"	"	39600	75000	3.0	3500	3.0
2.2	**4750**	**2.2**	662.1	"	"	39600	75000	2.7	3850	2.7
1.9	**5500**	**1.9**	770.6	"	"	39600	75000	2.3	4550	2.3
1.7	**6100**	**1.7**	874.6	"	"	39600	75000	2.0	5200	2.0
1.5	**7000**	**1.5**	990.4	"	"	39600	75000	1.8	5800	1.8
1.3	**8000**	**1.3**	1124	"	"	39600	75000	1.6	6500	1.6
1.1	**8100**	**1.3**	1329	**BF80G40-../DHE09LA4**	349	39600	75000	1.4	6000	1.75
1.0	**9100**	**1.15**	1491	"	"	39600	75000	1.2	7300	1.45
0.9	**10000**	**1.05**	1693	"	"	39600	75000	1.1	7900	1.35
1.8	**5800**	**3.2**	845.1	**BF90Z-../DHE09LA4**	608	42800	120000	2.1	5000	3.7
1.4	**6100**	**3.0**	1043	**BF90G50-../DHE09LA4**	620	42800	120000	1.7	4750	3.9
1.2	**7100**	**2.6**	1204	"	"	42800	120000	1.5	5300	3.5
1.0	**9100**	**2.0**	1444	"	"	42800	120000	1.3	6700	2.8
0.9	**10000**	**1.85**	1678	"	"	42800	120000	1.1	7900	2.3
0.8	**11300**	**1.65**	1867	"	"	42800	120000	0.95	9200	2.0
0.7	**12900**	**1.45**	2154	"	"	42800	120000	0.85	10300	1.8
0.55	**16700**	**1.1**	2656	"	"	42800	120000	0.7	12600	1.45

P = 1.5 kW

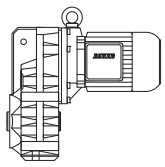

50 Hz			i	Type	m	F_{RN}	F_{RV}	60 Hz		
n_2	M_2	f_B						n_2	M_2	f_B
1/min	Nm				kg	N	N	1/min	Nm	
260	**55**	**2.5**	5.60	**BF10-../DHE09XA4**	40	1980	-	315	45	3.1
190	**75**	**2.0**	7.58	"	"	2200	-	230	62	2.5
149	**96**	**1.85**	9.69	"	"	2350	-	180	79	2.2
122	**117**	**1.55**	11.84	"	"	2500	-	147	97	1.9
96	**149**	**1.25**	15.04	"	"	2800	-	116	123	1.5
79	**181**	**1.35**	18.23	"	"	2900	-	96	149	1.6
72	**198**	**1.2**	20.05	"	"	3000	-	87	164	1.45
62	**230**	**1.05**	23.28	"	"	3200	-	75	191	1.25
57	**250**	**0.96**	25.60	"	"	3350	-	68	210	1.15
51	**280**	**0.86**	28.47	"	"	3450	-	62	230	1.05
180	**79**	**2.8**	8.00	**BF20-../DHE09XA4**	46	2850	-	220	65	3.4
138	**103**	**2.5**	10.51	"	"	3100	-	166	86	3.0
110	**130**	**2.2**	13.18	"	"	3300	-	133	107	2.7
93	**154**	**2.0**	15.54	"	"	3450	-	112	127	2.4
86	**166**	**2.2**	16.77	"	"	3500	-	104	137	2.6
79	**181**	**2.0**	18.45	"	"	3600	-	95	150	2.5
66	**215**	**1.85**	22.04	"	"	3800	-	79	181	2.2
60	**235**	**1.7**	24.25	"	"	3950	-	72	198	2.0
53	**270**	**1.55**	27.62	"	"	4150	-	63	225	1.85
47.5	**300**	**1.4**	30.40	"	"	4400	-	58	245	1.7
44.5	**320**	**1.3**	32.58	"	"	4450	-	54	265	1.6
40.5	**350**	**1.2**	35.85	"	"	4650	-	49	290	1.45
35	**405**	**1.05**	41.72	"	"	4950	-	42	340	1.25
31.5	**450**	**0.93**	45.90	"	"	5100	-	38	375	1.1
30	**475**	**0.88**	48.56	"	"	5200	-	36	395	1.05
145	**98**	**3.3**	9.99	**BF30-../DHE09XA4**	57	2850	-	175	81	4.0
112	**127**	**2.9**	12.91	"	"	3050	-	135	106	3.5
90	**159**	**2.6**	16.00	"	"	3250	-	109	131	3.1
82	**174**	**2.8**	17.65	"	"	3300	-	99	144	3.3
75	**191**	**2.6**	19.41	"	"	3400	-	90	159	3.2
66	**215**	**2.5**	21.85	"	"	3500	-	80	179	3.0
60	**235**	**2.4**	24.03	"	"	3600	-	73	196	2.8
52	**275**	**2.1**	28.23	"	"	3800	-	62	230	2.5
46.5	**305**	**1.9**	31.05	"	"	4000	-	57	250	2.3
41.5	**345**	**1.65**	35.00	"	"	4200	-	50	285	2.0
37.5	**380**	**1.5**	38.49	"	"	4400	-	45.5	310	1.85
35.5	**400**	**1.45**	41.01	"	"	4500	-	42.5	335	1.7
32	**445**	**1.3**	45.10	"	"	4700	-	39	365	1.6
28	**510**	**1.15**	52.20	"	"	5000	-	33.5	425	1.35
25.5	**560**	**1.05**	57.41	"	"	5200	-	30.5	465	1.25
24	**590**	**0.97**	61.17	"	"	5300	-	28.5	500	1.15
21.5	**660**	**0.87**	67.28	"	"	5500	-	26	550	1.05
20	**710**	**0.81**	72.13	"	"	5700	-	24.5	580	0.99
67	**210**	**3.3**	21.60	**BF40-../DHE09XA4**	66	5200	-	81	176	4.0
61	**230**	**3.2**	23.77	"	"	5400	-	74	193	3.8
54	**265**	**2.9**	26.86	"	"	5600	-	65	220	3.5
49	**290**	**2.8**	29.55	"	"	5800	-	59	240	3.4
42.5	**335**	**2.6**	34.21	"	"	6000	-	51	280	3.1
38.5	**370**	**2.4**	37.64	"	"	6200	-	46.5	305	2.9
35	**405**	**2.2**	41.42	"	"	6500	-	42.5	335	2.7
32	**445**	**2.0**	45.56	"	"	6800	-	38.5	370	2.4
29.5	**485**	**1.85**	48.92	"	"	7000	-	36	395	2.3
27	**530**	**1.7**	53.82	"	"	7200	-	32.5	440	2.0
24	**590**	**1.55**	61.25	"	"	7600	-	28.5	500	1.8
21.5	**660**	**1.35**	67.38	"	"	8000	-	26	550	1.65
20.5	**690**	**1.3**	71.40	"	"	8100	-	24.5	580	1.55
18.5	**770**	**1.15**	78.55	"	"	8500	-	22.5	630	1.45
17.5	**810**	**1.1**	83.91	"	"	8700	-	21	680	1.3
16	**890**	**1.0**	92.31	"	"	9100	-	19	750	1.2
14.5	**980**	**0.92**	101.0	"	"	9400	-	17.5	810	1.1
13	**1100**	**0.82**	111.1	"	"	9800	-	16	890	1.0

P = 1.5 kW

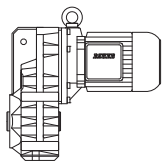

50 Hz			i	Type	m	F_{RN}	F_{RV}	60 Hz		
n_2	M_2	f_B						n_2	M_2	f_B
1/min	Nm				kg	N	N	1/min	Nm	
34.5	**415**	**3.1**	42.15	**BF50-../DHE09XA4**	94	8500	-	41.5	345	3.8
31	**460**	**2.8**	47.14	"	"	8900	-	37	385	3.4
25.5	**560**	**2.3**	56.86	"	"	9300	-	31	460	2.8
23	**620**	**2.1**	63.59	"	"	9800	-	27.5	520	2.5
20	**710**	**1.85**	72.72	"	"	10700	-	24	590	2.2
18	**790**	**1.65**	81.33	"	"	11300	-	21.5	660	1.95
16	**890**	**1.45**	90.24	"	"	11800	-	19.5	730	1.8
14.5	**980**	**1.35**	100.9	"	"	12300	-	17.5	810	1.6
13	**1100**	**1.2**	114.0	"	"	12900	-	15.5	920	1.4
11.5	**1240**	**1.05**	127.5	"	"	13600	-	14	1020	1.25
10.5	**1360**	**0.96**	138.1	**BF50Z-../DHE09XA4**	99	13600	-	13	1100	1.2
9.4	**1520**	**0.86**	154.5	"	"	13600	-	11.5	1240	1.05
20	**710**	**3.2**	72.15	**BF60-../DHE09XA4**	124	12000	34000	24.5	580	4.0
18	**790**	**2.9**	80.05	"	"	12600	35600	22	650	3.5
15.5	**920**	**2.5**	93.44	"	"	13500	38200	19	750	3.1
14	**1020**	**2.3**	103.7	"	"	14100	39900	17	840	2.7
13	**1100**	**2.1**	113.1	"	"	14600	41300	15.5	920	2.5
11.5	**1240**	**1.85**	125.5	"	"	15300	43300	14	1020	2.3
10.5	**1360**	**1.7**	140.8	**BF60Z-../DHE09XA4**	143	15300	43300	12.5	1140	2.0
8.6	**1660**	**1.4**	169.2	"	"	15300	43300	10.5	1360	1.7
7.7	**1860**	**1.25**	187.7	"	"	15300	43300	9.3	1540	1.5
6.6	**2150**	**1.05**	221.4	"	"	15300	43300	7.9	1810	1.25
5.9	**2400**	**0.96**	245.6	"	"	15300	43300	7.1	2000	1.15
5.0	**2850**	**0.81**	293.4	"	"	15300	43300	6.0	2350	0.98
8.1	**1760**	**3.0**	179.7	**BF70Z-../DHE09XA4**	231	16100	47700	9.7	1470	3.5
7.3	**1960**	**2.7**	199.7	"	"	16100	47700	8.8	1620	3.2
6.2	**2300**	**2.3**	233.0	"	"	16100	47700	7.5	1910	2.7
5.6	**2550**	**2.0**	258.7	"	"	16100	47700	6.8	2100	2.5
4.8	**2950**	**1.75**	301.8	"	"	16100	47700	5.8	2450	2.1
4.3	**3300**	**1.6**	341.7	"	"	16100	47700	5.1	2800	1.85
3.7	**3850**	**1.35**	398.7	"	"	16100	47700	4.4	3250	1.6
3.3	**4300**	**1.2**	439.2	"	"	16100	47700	4.0	3550	1.45
2.9	**4900**	**1.05**	512.4	"	"	16100	47700	3.4	4200	1.25
2.8	**4850**	**1.2**	524.1	**BF70G20-../DHE09XA4**	229	16100	47700	3.4	3950	1.45
2.5	**5400**	**1.05**	577.5	"	"	16100	47700	3.1	4350	1.3
2.2	**6200**	**0.92**	673.6	"	"	16100	47700	2.6	5200	1.1
4.2	**3400**	**3.1**	347.3	**BF80Z-../DHE09XA4**	348	39600	75000	5.1	2800	3.8
3.7	**3850**	**2.7**	394.2	"	"	39600	75000	4.5	3150	3.3
3.2	**4450**	**2.4**	450.4	"	"	39600	75000	3.9	3650	2.9
2.9	**4900**	**2.1**	511.2	"	"	39600	75000	3.5	4050	2.6
2.5	**5700**	**1.85**	583.4	"	"	39600	75000	3.0	4750	2.2
2.2	**6500**	**1.6**	662.1	"	"	39600	75000	2.7	5300	2.0
1.9	**7500**	**1.4**	770.6	"	"	39600	75000	2.3	6200	1.7
1.7	**8400**	**1.25**	874.6	"	"	39600	75000	2.0	7100	1.5
1.5	**9500**	**1.1**	990.4	"	"	39600	75000	1.8	7900	1.35
1.3	**11000**	**0.95**	1124	"	"	39600	75000	1.6	8900	1.2
1.1	**11500**	**0.91**	1329	**BF80G40-../DHE09XA4**	353	39600	75000	1.4	8700	1.2
1.0	**12900**	**0.81**	1491	"	"	39600	75000	1.2	10500	1.0
2.5	**5700**	**3.2**	591.1	**BF90Z-../DHE09XA4**	612	42800	120000	3.0	4750	3.9
2.2	**6500**	**2.8**	658.1	"	"	42800	120000	2.7	5300	3.5
1.9	**7500**	**2.5**	759.0	"	"	42800	120000	2.3	6200	3.0
1.8	**7900**	**2.3**	845.1	"	"	42800	120000	2.1	6800	2.7
1.5	**7900**	**2.3**	976.1	**BF90G50-../DHE09XA4**	624	42800	120000	1.8	6300	2.9
1.4	**8800**	**2.1**	1043	"	"	42800	120000	1.7	7000	2.6
1.2	**10300**	**1.8**	1204	"	"	42800	120000	1.5	7900	2.3
1.0	**12900**	**1.45**	1444	"	"	42800	120000	1.3	9600	1.95
0.9	**14300**	**1.3**	1678	"	"	42800	120000	1.1	11400	1.6
0.8	**16100**	**1.15**	1867	"	"	42800	120000	0.95	13200	1.4
0.7	**18400**	**1.0**	2154	"	"	42800	120000	0.85	14700	1.25

P = 2.2 kW

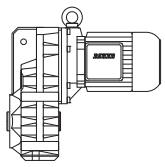

50 Hz			i	Type	m	F_{RN}	F_{RV}	60 Hz		
n_2	M_2	f_B						n_2	M_2	f_B
1/min	Nm				kg	N	N	1/min	Nm	
260	**80**	**1.75**	5.60	**BF10-../DHE09XA4C**	43	1980	-	315	66	2.1
190	**110**	**1.4**	7.58	"	"	2200	-	230	91	1.7
149	**141**	**1.25**	9.69	"	"	2350	-	180	116	1.55
122	**172**	**1.05**	11.84	"	"	2500	-	147	142	1.3
96	**215**	**0.85**	15.04	"	"	2800	-	116	181	1.0
79	**265**	**0.91**	18.23	"	"	2900	-	96	215	1.1
72	**290**	**0.83**	20.05	"	"	3000	-	87	240	1.0
240	**87**	**2.3**	6.04	**BF20-../DHE09XA4C**	49	2550	-	290	72	2.8
180	**116**	**1.9**	8.00	"	"	2850	-	220	95	2.3
138	**152**	**1.7**	10.51	"	"	3100	-	166	126	2.0
110	**191**	**1.5**	13.18	"	"	3300	-	133	157	1.8
93	**225**	**1.35**	15.54	"	"	3450	-	112	187	1.65
86	**240**	**1.5**	16.77	"	"	3500	-	104	200	1.8
79	**265**	**1.4**	18.45	"	"	3600	-	95	220	1.7
66	**315**	**1.25**	22.04	"	"	3800	-	79	265	1.5
60	**350**	**1.15**	24.25	"	"	3950	-	72	290	1.4
53	**395**	**1.05**	27.62	"	"	4150	-	63	330	1.25
47.5	**440**	**0.95**	30.40	"	"	4400	-	58	360	1.15
44.5	**470**	**0.89**	32.58	"	"	4450	-	54	385	1.1
40.5	**510**	**0.82**	35.85	"	"	4650	-	49	425	0.99
230	**91**	**2.9**	6.34	**BF30-../DHE09XA4C**	59	2400	-	275	76	3.5
179	**117**	**2.4**	8.07	"	"	2650	-	220	95	3.0
145	**144**	**2.2**	9.99	"	"	2850	-	175	120	2.7
112	**187**	**1.95**	12.91	"	"	3050	-	135	155	2.4
90	**230**	**1.75**	16.00	"	"	3250	-	109	192	2.1
82	**255**	**1.9**	17.65	"	"	3300	-	99	210	2.3
75	**280**	**1.8**	19.41	"	"	3400	-	90	230	2.2
66	**315**	**1.7**	21.85	"	"	3500	-	80	260	2.0
60	**350**	**1.6**	24.03	"	"	3600	-	73	285	1.95
52	**400**	**1.45**	28.23	"	"	3800	-	62	335	1.7
46.5	**450**	**1.3**	31.05	"	"	4000	-	57	365	1.6
41.5	**500**	**1.15**	35.00	"	"	4200	-	50	420	1.35
37.5	**560**	**1.05**	38.49	"	"	4400	-	45.5	460	1.25
35.5	**590**	**0.97**	41.01	"	"	4500	-	42.5	490	1.15
32	**650**	**0.88**	45.10	"	"	4700	-	39	530	1.1
189	**111**	**3.3**	7.62	**BF40-../DHE09XA4C**	69	3900	-	230	91	4.0
152	**138**	**3.0**	9.48	"	"	4150	-	184	114	3.6
123	**170**	**2.7**	11.79	"	"	4450	-	148	141	3.3
96	**215**	**2.4**	15.02	"	"	4800	-	116	181	2.9
83	**250**	**2.5**	17.35	"	"	4950	-	101	205	3.1
76	**275**	**2.4**	19.09	"	"	5100	-	92	225	3.0
67	**310**	**2.3**	21.60	"	"	5200	-	81	255	2.8
61	**340**	**2.2**	23.77	"	"	5400	-	74	280	2.6
54	**385**	**2.0**	26.86	"	"	5600	-	65	320	2.4
49	**425**	**1.9**	29.55	"	"	5800	-	59	355	2.3
42.5	**490**	**1.75**	34.21	"	"	6000	-	51	410	2.1
38.5	**540**	**1.65**	37.64	"	"	6200	-	46.5	450	2.0
35	**600**	**1.5**	41.42	"	"	6500	-	42.5	490	1.85
32	**650**	**1.4**	45.56	"	"	6800	-	38.5	540	1.65
29.5	**710**	**1.25**	48.92	"	"	7000	-	36	580	1.55
27	**770**	**1.15**	53.82	"	"	7200	-	32.5	640	1.4
24	**870**	**1.05**	61.25	"	"	7600	-	28.5	730	1.25
21.5	**970**	**0.93**	67.38	"	"	8000	-	26	800	1.15
20.5	**1020**	**0.88**	71.40	"	"	8100	-	24.5	850	1.05
18.5	**1130**	**0.8**	78.55	"	"	8500	-	22.5	930	0.97
56	**375**	**3.1**	25.88	**BF50-../DHE09XA4C**	97	7100	-	68	305	3.8
45.5	**460**	**2.8**	31.73	"	"	7500	-	55	380	3.3
41	**510**	**2.5**	35.49	"	"	7800	-	49.5	420	3.1
34.5	**600**	**2.2**	42.15	"	"	8500	-	41.5	500	2.6
31	**670**	**1.95**	47.14	"	"	8900	-	37	560	2.3

P = 2.2 kW

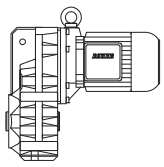

50 Hz			i	Type	m	F_{RN}	F_{RV}	60 Hz		
n_2	M_2	f_B						n_2	M_2	f_B
1/min	Nm				kg	N	N	1/min	Nm	
25.5	**820**	**1.6**	56.86	**BF50-../DHE09XA4C**	"	9300	-	31	670	1.95
23	**910**	**1.45**	63.59	"	"	9800	-	27.5	760	1.7
20	**1050**	**1.25**	72.72	"	"	10700	-	24	870	1.5
18	**1160**	**1.1**	81.33	"	"	11300	-	21.5	970	1.35
16	**1310**	**0.99**	90.24	"	"	11800	-	19.5	1070	1.2
14.5	**1440**	**0.9**	100.9	"	"	12300	-	17.5	1200	1.1
13	**1610**	**0.81**	114.0	"	"	12900	-	15.5	1350	0.96
26.5	**790**	**2.9**	54.44	**BF60-../DHE09XA4C**	126	10500	29700	32	650	3.5
24	**870**	**2.6**	60.40	"	"	11100	31400	29	720	3.2
20	**1050**	**2.2**	72.15	"	"	12000	34000	24.5	850	2.7
18	**1160**	**2.0**	80.05	"	"	12600	35600	22	950	2.4
15.5	**1350**	**1.7**	93.44	"	"	13500	38200	19	1100	2.1
14	**1500**	**1.55**	103.7	"	"	14100	39900	17	1230	1.85
13	**1610**	**1.45**	113.1	"	"	14600	41300	15.5	1350	1.7
11.5	**1820**	**1.25**	125.5	"	"	15300	43300	14	1500	1.55
10.5	**2000**	**1.15**	140.8	**BF60Z-../DHE09XA4C**	146	15300	43300	12.5	1680	1.35
8.6	**2400**	**0.96**	169.2	"	"	15300	43300	10.5	2000	1.15
7.7	**2700**	**0.85**	187.7	"	"	15300	43300	9.3	2250	1.0
12	**1750**	**3.0**	122.7	**BF70-../DHE09XA4C**	213	16100	47700	14.5	1440	3.6
11	**1910**	**2.7**	133.0	**BF70Z-../DHE09XA4C**	234	16100	47700	13.5	1550	3.4
9.4	**2200**	**2.4**	154.0	"	"	16100	47700	11.5	1820	2.9
8.1	**2550**	**2.0**	179.7	"	"	16100	47700	9.7	2150	2.4
7.3	**2850**	**1.8**	199.7	"	"	16100	47700	8.8	2350	2.2
6.2	**3350**	**1.55**	233.0	"	"	16100	47700	7.5	2800	1.85
5.6	**3750**	**1.4**	258.7	"	"	16100	47700	6.8	3050	1.7
4.8	**4350**	**1.2**	301.8	"	"	16100	47700	5.8	3600	1.45
4.3	**4850**	**1.05**	341.7	"	"	16100	47700	5.1	4100	1.25
3.7	**5600**	**0.93**	398.7	"	"	16100	47700	4.4	4750	1.1
3.3	**6300**	**0.83**	439.2	"	"	16100	47700	4.0	5200	1.0
6.9	**3000**	**3.2**	209.4	**BF80-../DHE09XA4C**	309	34300	75000	8.4	2500	3.8
6.1	**3400**	**2.8**	237.1	"	"	36900	75000	7.4	2800	3.4
5.4	**3850**	**2.5**	269.1	"	"	39600	75000	6.5	3200	3.0
5.0	**4200**	**2.5**	291.7	**BF80Z-../DHE09XA4C**	350	39600	75000	6.0	3500	3.0
4.2	**5000**	**2.1**	347.3	"	"	39600	75000	5.1	4100	2.6
3.7	**5600**	**1.9**	394.2	"	"	39600	75000	4.5	4650	2.3
3.2	**6500**	**1.6**	450.4	"	"	39600	75000	3.9	5300	2.0
2.9	**7200**	**1.45**	511.2	"	"	39600	75000	3.5	6000	1.75
2.5	**8400**	**1.25**	583.4	"	"	39600	75000	3.0	7000	1.5
2.2	**9500**	**1.1**	662.1	"	"	39600	75000	2.7	7700	1.35
1.9	**11000**	**0.95**	770.6	"	"	39600	75000	2.3	9100	1.15
1.7	**12300**	**0.85**	874.6	"	"	39600	75000	2.0	10500	1.0
3.2	**6500**	**2.8**	456.7	**BF90Z-../DHE09XA4C**	614	42800	120000	3.9	5300	3.5
2.9	**7200**	**2.6**	508.5	"	"	42800	120000	3.5	6000	3.1
2.5	**8400**	**2.2**	591.1	"	"	42800	120000	3.0	7000	2.6
2.2	**9500**	**1.95**	658.1	"	"	42800	120000	2.7	7700	2.4
1.9	**11000**	**1.7**	759.0	"	"	42800	120000	2.3	9100	2.0
1.8	**11600**	**1.6**	845.1	"	"	42800	120000	2.1	10000	1.85
1.5	**12400**	**1.5**	976.1	**BF90G50-../DHE09XA4C**	626	42800	120000	1.8	10000	1.85
1.4	**13600**	**1.35**	1043	"	"	42800	120000	1.7	10900	1.7
1.2	**15800**	**1.15**	1204	"	"	42800	120000	1.5	12300	1.5
1.0	**19600**	**0.94**	1444	"	"	42800	120000	1.3	14700	1.25

P = 3 kW

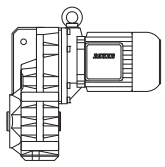

50 Hz			i	Type	m	F_{RN}	F_{RV}	60 Hz		
n_2	M_2	f_B						n_2	M_2	f_B
1/min	Nm				kg	N	N	1/min	Nm	
230	**124**	**2.1**	6.34	**BF30-../DHE11MA4**	66	2400	-	275	104	2.5
179	**160**	**1.8**	8.07	"	"	2650	-	220	130	2.2
145	**197**	**1.6**	9.99	"	"	2850	-	175	163	1.95
112	**255**	**1.45**	12.91	"	"	3050	-	135	210	1.75
90	**315**	**1.3**	16.00	"	"	3250	-	109	260	1.55
82	**345**	**1.4**	17.65	"	"	3300	-	99	285	1.7
75	**380**	**1.3**	19.41	"	"	3400	-	90	315	1.6
66	**430**	**1.25**	21.85	"	"	3500	-	80	355	1.5
60	**475**	**1.15**	24.03	"	"	3600	-	73	390	1.4
52	**550**	**1.05**	28.23	"	"	3800	-	62	460	1.25
46.5	**610**	**0.94**	31.05	"	"	4000	-	57	500	1.15
41.5	**690**	**0.83**	35.00	"	"	4200	-	50	570	1.0
250	**114**	**2.9**	5.87	**BF40-../DHE11MA4**	80	3550	-	300	95	3.5
189	**151**	**2.4**	7.62	"	"	3900	-	230	124	3.0
152	**188**	**2.2**	9.48	"	"	4150	-	184	155	2.7
123	**230**	**2.0**	11.79	"	"	4450	-	148	193	2.4
96	**295**	**1.75**	15.02	"	"	4800	-	116	245	2.1
83	**345**	**1.85**	17.35	"	"	4950	-	101	280	2.3
76	**375**	**1.75**	19.09	"	"	5100	-	92	310	2.1
67	**425**	**1.65**	21.60	"	"	5200	-	81	350	2.0
61	**465**	**1.6**	23.77	"	"	5400	-	74	385	1.9
54	**530**	**1.45**	26.86	"	"	5600	-	65	440	1.75
49	**580**	**1.4**	29.55	"	"	5800	-	59	485	1.65
42.5	**670**	**1.3**	34.21	"	"	6000	-	51	560	1.55
38.5	**740**	**1.2**	37.64	"	"	6200	-	46.5	610	1.45
35	**810**	**1.1**	41.42	"	"	6500	-	42.5	670	1.35
32	**890**	**1.0**	45.56	"	"	6800	-	38.5	740	1.2
29.5	**970**	**0.93**	48.92	"	"	7000	-	36	790	1.15
27	**1060**	**0.85**	53.82	"	"	7200	-	32.5	880	1.0
135	**210**	**3.2**	10.68	**BF50-../DHE11MA4**	110	5600	-	163	175	3.9
99	**285**	**2.8**	14.65	"	"	6100	-	119	240	3.3
87	**325**	**2.9**	16.70	"	"	6200	-	105	270	3.5
78	**365**	**2.7**	18.68	"	"	6400	-	94	300	3.3
63	**450**	**2.5**	23.14	"	"	6800	-	76	375	3.0
56	**510**	**2.3**	25.88	"	"	7100	-	68	420	2.8
45.5	**620**	**2.0**	31.73	"	"	7500	-	55	520	2.4
41	**690**	**1.9**	35.49	"	"	7800	-	49.5	570	2.3
34.5	**830**	**1.55**	42.15	"	"	8500	-	41.5	690	1.9
31	**920**	**1.4**	47.14	"	"	8900	-	37	770	1.7
25.5	**1120**	**1.15**	56.86	"	"	9300	-	31	920	1.4
23	**1240**	**1.05**	63.59	"	"	9800	-	27.5	1040	1.25
20	**1430**	**0.91**	72.72	"	"	10700	-	24	1190	1.1
18	**1590**	**0.82**	81.33	"	"	11300	-	21.5	1330	0.98
46.5	**610**	**3.1**	31.20	**BF60-../DHE11MA4**	141	8800	24900	56	510	3.7
42	**680**	**2.9**	34.62	"	"	9100	25700	51	560	3.5
35	**810**	**2.6**	41.60	"	"	9600	27100	42	680	3.1
31.5	**900**	**2.5**	46.16	"	"	9900	28000	38	750	3.0
26.5	**1080**	**2.1**	54.44	"	"	10500	29700	32	890	2.6
24	**1190**	**1.95**	60.40	"	"	11100	31400	29	980	2.3
20	**1430**	**1.6**	72.15	"	"	12000	34000	24.5	1160	2.0
18	**1590**	**1.45**	80.05	"	"	12600	35600	22	1300	1.75
15.5	**1840**	**1.25**	93.44	"	"	13500	38200	19	1500	1.55
14	**2000**	**1.15**	103.7	"	"	14100	39900	17	1680	1.35
13	**2200**	**1.05**	113.1	"	"	14600	41300	15.5	1840	1.25
11.5	**2450**	**0.94**	125.5	"	"	15300	43300	14	2000	1.15
10.5	**2700**	**0.85**	140.8	**BF60Z-../DHE11MA4**	157	15300	43300	12.5	2250	1.0
18	**1590**	**3.3**	81.82	**BF70-../DHE11MA4**	220	12800	41300	21.5	1330	3.9
15.5	**1840**	**2.8**	95.46	"	"	14000	43700	18.5	1540	3.4
14	**2000**	**2.6**	105.2	"	"	14700	45100	17	1680	3.1
12	**2350**	**2.2**	122.7	"	"	16100	47700	14.5	1970	2.6

P = 3 kW

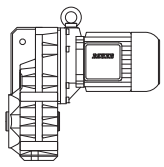

50 Hz			i	Type	m	F_{RN}	F_{RV}	60 Hz		
n_2	M_2	f_B						n_2	M_2	f_B
1/min	Nm				kg	N	N	1/min	Nm	
11	**2600**	**2.0**	133.0	**BF70Z-../DHE11MA4**	247	16100	47700	13.5	2100	2.5
9.4	**3000**	**1.75**	154.0	"	"	16100	47700	11.5	2450	2.1
8.1	**3500**	**1.5**	179.7	"	"	16100	47700	9.7	2950	1.75
7.3	**3900**	**1.35**	199.7	"	"	16100	47700	8.8	3250	1.6
6.2	**4600**	**1.15**	233.0	"	"	16100	47700	7.5	3800	1.35
5.6	**5100**	**1.0**	258.7	"	"	16100	47700	6.8	4200	1.25
4.8	**5900**	**0.88**	301.8	"	"	16100	47700	5.8	4900	1.05
9.1	**3100**	**3.1**	158.5	**BF80-../DHE11MA4**	316	29000	75000	11	2600	3.7
7.9	**3600**	**2.6**	184.5	"	"	31800	75000	9.5	3000	3.2
6.9	**4150**	**2.3**	209.4	"	"	34300	75000	8.4	3400	2.8
6.1	**4650**	**2.0**	237.1	"	"	36900	75000	7.4	3850	2.5
5.4	**5300**	**1.8**	269.1	"	"	39600	75000	6.5	4400	2.2
5.0	**5700**	**1.85**	291.7	**BF80Z-../DHE11MA4**	363	39600	75000	6.0	4750	2.2
4.2	**6800**	**1.55**	347.3	"	"	39600	75000	5.1	5600	1.9
3.7	**7700**	**1.35**	394.2	"	"	39600	75000	4.5	6300	1.65
3.2	**8900**	**1.2**	450.4	"	"	39600	75000	3.9	7300	1.45
2.9	**9800**	**1.05**	511.2	"	"	39600	75000	3.5	8100	1.3
2.5	**11400**	**0.92**	583.4	"	"	39600	75000	3.0	9500	1.1
2.2	**13000**	**0.81**	662.1	"	"	39600	75000	2.7	10600	0.99
5.6	**5100**	**3.3**	259.0	**BF90-../DHE11MA4**	569	42800	120000	6.8	4200	4.0
4.8	**5900**	**3.1**	300.4	**BF90Z-../DHE11MA4**	629	42800	120000	5.8	4900	3.8
4.2	**6800**	**2.7**	343.6	"	"	42800	120000	5.1	5600	3.3
3.8	**7500**	**2.5**	382.6	"	"	42800	120000	4.6	6200	3.0
3.2	**8900**	**2.1**	456.7	"	"	42800	120000	3.9	7300	2.5
2.9	**9800**	**1.9**	508.5	"	"	42800	120000	3.5	8100	2.3
2.5	**11400**	**1.6**	591.1	"	"	42800	120000	3.0	9500	1.95
2.2	**13000**	**1.4**	658.1	"	"	42800	120000	2.7	10600	1.75
1.9	**15000**	**1.25**	759.0	"	"	42800	120000	2.3	12400	1.5
1.8	**15900**	**1.15**	845.1	"	"	42800	120000	2.1	13600	1.35
1.5	**17500**	**1.05**	976.1	**BF90G50-../DHE11MA4**	639	42800	120000	1.8	14300	1.3
1.4	**19000**	**0.97**	1043	"	"	42800	120000	1.7	15400	1.2
1.2	**22200**	**0.83**	1204	"	"	42800	120000	1.5	17400	1.05

P = 4 kW

50 Hz			i	Type	m	F_{RN}	F_{RV}	60 Hz		
n_2	M_2	f_B						n_2	M_2	f_B
1/min	Nm				kg	N	N	1/min	Nm	
230	**166**	**1.6**	6.34	**BF30-../DHE11LA4**	78	2400	-	275	138	1.9
179	**210**	**1.35**	8.07	"	"	2650	-	220	173	1.65
145	**260**	**1.25**	9.99	"	"	2850	-	175	215	1.5
112	**340**	**1.1**	12.91	"	"	3050	-	135	280	1.3
90	**420**	**0.97**	16.00	"	"	3250	-	109	350	1.15
82	**465**	**1.05**	17.65	"	"	3300	-	99	385	1.25
75	**500**	**1.0**	19.41	"	"	3400	-	90	420	1.2
66	**570**	**0.93**	21.85	"	"	3500	-	80	475	1.1
60	**630**	**0.88**	24.03	"	"	3600	-	73	520	1.05
250	**152**	**2.2**	5.87	**BF40-../DHE11LA4**	92	3550	-	300	127	2.6
189	**200**	**1.85**	7.62	"	"	3900	-	230	166	2.2
152	**250**	**1.65**	9.48	"	"	4150	-	184	205	2.0
123	**310**	**1.5**	11.79	"	"	4450	-	148	255	1.8
96	**395**	**1.3**	15.02	"	"	4800	-	116	325	1.6
83	**460**	**1.4**	17.35	"	"	4950	-	101	375	1.7
76	**500**	**1.35**	19.09	"	"	5100	-	92	415	1.6
67	**570**	**1.25**	21.60	"	"	5200	-	81	470	1.5
61	**620**	**1.2**	23.77	"	"	5400	-	74	510	1.45
54	**700**	**1.1**	26.86	"	"	5600	-	65	580	1.35
49	**770**	**1.05**	29.55	"	"	5800	-	59	640	1.25

BF-series paralle shaft geared motors

Selection - parallel shaft geared motors DHE - IE2

P = 4 kW

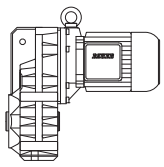

50 Hz			i	Type	m	F_{RN}	F_{RV}	60 Hz		
n_2	M_2	f_B						n_2	M_2	f_B
1/min	Nm				kg	N	N	1/min	Nm	
42.5	**890**	**0.96**	34.21	**BF40-../DHE11LA4**	"	6000	-	51	740	1.15
38.5	**990**	**0.9**	37.64	"	"	6200	-	46.5	820	1.1
35	**1090**	**0.83**	41.42	"	"	6500	-	42.5	890	1.0
187	**200**	**2.8**	7.71	**BF50-../DHE11LA4**	122	5100	-	230	166	3.4
135	**280**	**2.4**	10.68	"	"	5600	-	163	230	2.9
99	**385**	**2.1**	14.65	"	"	6100	-	119	320	2.5
87	**435**	**2.2**	16.70	"	"	6200	-	105	360	2.6
78	**485**	**2.1**	18.68	"	"	6400	-	94	405	2.5
63	**600**	**1.85**	23.14	"	"	6800	-	76	500	2.2
56	**680**	**1.7**	25.88	"	"	7100	-	68	560	2.1
45.5	**830**	**1.55**	31.73	"	"	7500	-	55	690	1.85
41	**930**	**1.4**	35.49	"	"	7800	-	49.5	770	1.7
34.5	**1100**	**1.2**	42.15	"	"	8500	-	41.5	920	1.4
31	**1230**	**1.05**	47.14	"	"	8900	-	37	1030	1.25
25.5	**1490**	**0.87**	56.86	"	"	9300	-	31	1230	1.05
102	**370**	**3.2**	14.24	**BF60-../DHE11LA4**	153	7100	20000	123	310	3.8
85	**445**	**3.3**	16.96	"	"	7300	20600	103	370	3.9
77	**495**	**3.1**	18.81	"	"	7600	21500	93	410	3.7
64	**590**	**2.8**	22.58	"	"	8000	22600	78	485	3.4
58	**650**	**2.7**	25.05	"	"	8200	23200	70	540	3.2
46.5	**820**	**2.3**	31.20	"	"	8800	24900	56	680	2.8
42	**900**	**2.2**	34.62	"	"	9100	25700	51	740	2.7
35	**1090**	**1.95**	41.60	"	"	9600	27100	42	900	2.4
31.5	**1210**	**1.85**	46.16	"	"	9900	28000	38	1000	2.2
26.5	**1440**	**1.6**	54.44	"	"	10500	29700	32	1190	1.95
24	**1590**	**1.45**	60.40	"	"	11100	31400	29	1310	1.75
20	**1910**	**1.2**	72.15	"	"	12000	34000	24.5	1550	1.5
18	**2100**	**1.1**	80.05	"	"	12600	35600	22	1730	1.35
15.5	**2450**	**0.94**	93.44	"	"	13500	38200	19	2000	1.15
14	**2700**	**0.85**	103.7	"	"	14100	39900	17	2200	1.05
23.5	**1620**	**3.2**	61.94	**BF70-../DHE11LA4**	232	10800	37400	28.5	1340	3.9
20	**1910**	**2.7**	72.26	"	"	12000	39600	24.5	1550	3.4
18	**2100**	**2.5**	81.82	"	"	12800	41300	21.5	1770	2.9
15.5	**2450**	**2.1**	95.46	"	"	14000	43700	18.5	2050	2.5
14	**2700**	**1.95**	105.2	"	"	14700	45100	17	2200	2.4
12	**3150**	**1.65**	122.7	"	"	16100	47700	14.5	2600	2.0
11	**3450**	**1.5**	133.0	**BF70Z-../DHE11LA4**	258	16100	47700	13.5	2800	1.85
9.4	**4050**	**1.3**	154.0	"	"	16100	47700	11.5	3300	1.6
8.1	**4700**	**1.1**	179.7	"	"	16100	47700	9.7	3900	1.35
7.3	**5200**	**1.0**	199.7	"	"	16100	47700	8.8	4300	1.2
6.2	**6100**	**0.85**	233.0	"	"	16100	47700	7.5	5000	1.05
12	**3150**	**3.0**	122.4	**BF80-../DHE11LA4**	328	24500	75000	14.5	2600	3.7
10.5	**3600**	**2.6**	139.7	"	"	26700	75000	12.5	3050	3.1
9.1	**4150**	**2.3**	158.5	"	"	29000	75000	11	3450	2.8
7.9	**4800**	**2.0**	184.5	"	"	31800	75000	9.5	4000	2.4
6.9	**5500**	**1.75**	209.4	"	"	34300	75000	8.4	4500	2.1
6.1	**6200**	**1.55**	237.1	"	"	36900	75000	7.4	5100	1.85
5.4	**7000**	**1.35**	269.1	"	"	39600	75000	6.5	5800	1.65
5.0	**7600**	**1.4**	291.7	**BF80Z-../DHE11LA4**	375	39600	75000	6.0	6300	1.65
4.2	**9000**	**1.15**	347.3	"	"	39600	75000	5.1	7400	1.4
3.7	**10300**	**1.0**	394.2	"	"	39600	75000	4.5	8400	1.25
3.2	**11900**	**0.88**	450.4	"	"	39600	75000	3.9	9700	1.1
2.9	**13100**	**0.8**	511.2	"	"	39600	75000	3.5	10900	0.96
7.3	**5200**	**3.2**	198.8	**BF90-../DHE11LA4**	581	36000	111300	8.8	4300	3.9
6.2	**6100**	**2.8**	232.6	"	"	39900	118300	7.5	5000	3.4
5.6	**6800**	**2.5**	259.0	"	"	42800	120000	6.8	5600	3.0

P = 4 kW

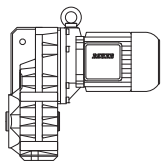

50 Hz			i	Type	m	F_{RN}	F_{RV}	60 Hz		
n_2	M_2	f_B						n_2	M_2	f_B
1/min	Nm				kg	N	N	1/min	Nm	
5.4	**7000**	**2.6**	269.8	**BF90Z-../DHE11LA4**	641	42800	120000	6.5	5800	3.2
4.8	**7900**	**2.3**	300.4	"	"	42800	120000	5.8	6500	2.8
4.2	**9000**	**2.1**	343.6	"	"	42800	120000	5.1	7400	2.5
3.8	**10000**	**1.85**	382.6	"	"	42800	120000	4.6	8300	2.2
3.2	**11900**	**1.55**	456.7	"	"	42800	120000	3.9	9700	1.9
2.9	**13100**	**1.4**	508.5	"	"	42800	120000	3.5	10900	1.7
2.5	**15200**	**1.2**	591.1	"	"	42800	120000	3.0	12700	1.45
2.2	**17300**	**1.05**	658.1	"	"	42800	120000	2.7	14100	1.3
1.9	**20100**	**0.92**	759.0	"	"	42800	120000	2.3	16600	1.1
1.8	**21200**	**0.87**	845.1	"	"	42800	120000	2.1	18100	1.0

P = 5.5 kW

50 Hz			i	Type	m	F_{RN}	F_{RV}	60 Hz		
n_2	M_2	f_B						n_2	M_2	f_B
1/min	Nm				kg	N	N	1/min	Nm	
235	**220**	**1.2**	6.34	**BF30-../DHE11LA4C**	82	2400	-	280	187	1.4
181	**290**	**0.99**	8.07	"	"	2650	-	220	235	1.2
147	**355**	**0.9**	9.99	"	"	2850	-	177	295	1.1
114	**460**	**0.8**	12.91	"	"	3050	-	137	380	0.96
250	**210**	**1.6**	5.87	**BF40-../DHE11LA4C**	96	3550	-	300	175	1.9
192	**270**	**1.35**	7.62	"	"	3900	-	235	220	1.65
155	**335**	**1.25**	9.48	"	"	4150	-	186	280	1.5
124	**420**	**1.1**	11.79	"	"	4450	-	150	350	1.35
98	**530**	**0.98**	15.02	"	"	4800	-	118	445	1.15
85	**610**	**1.05**	17.35	"	"	4950	-	102	510	1.25
77	**680**	**0.98**	19.09	"	"	5100	-	93	560	1.2
68	**770**	**0.91**	21.60	"	"	5200	-	82	640	1.1
62	**840**	**0.88**	23.77	"	"	5400	-	75	700	1.05
55	**950**	**0.82**	26.86	"	"	5600	-	66	790	0.98
275	**191**	**2.6**	5.38	**BF50-../DHE11LA4C**	126	4500	-	330	159	3.1
190	**275**	**2.1**	7.71	"	"	5100	-	230	225	2.5
137	**380**	**1.8**	10.68	"	"	5600	-	165	315	2.1
100	**520**	**1.5**	14.65	"	"	6100	-	121	430	1.85
88	**590**	**1.6**	16.70	"	"	6200	-	106	495	1.9
79	**660**	**1.5**	18.68	"	"	6400	-	95	550	1.8
64	**820**	**1.35**	23.14	"	"	6800	-	77	680	1.65
57	**920**	**1.25**	25.88	"	"	7100	-	69	760	1.55
46.5	**1120**	**1.15**	31.73	"	"	7500	-	56	930	1.35
41.5	**1260**	**1.05**	35.49	"	"	7800	-	50	1050	1.25
35	**1500**	**0.87**	42.15	"	"	8500	-	42	1250	1.05
189	**275**	**3.2**	7.74	**BF60-../DHE11LA4C**	157	6000	16900	230	225	3.9
142	**365**	**2.8**	10.31	"	"	6500	18400	171	305	3.3
103	**500**	**2.4**	14.24	"	"	7100	20000	124	420	2.8
87	**600**	**2.4**	16.96	"	"	7300	20600	104	500	2.9
78	**670**	**2.3**	18.81	"	"	7600	21500	94	550	2.8
65	**800**	**2.1**	22.58	"	"	8000	22600	78	670	2.5
59	**890**	**1.95**	25.05	"	"	8200	23200	71	730	2.4
47	**1110**	**1.7**	31.20	"	"	8800	24900	57	920	2.1
42.5	**1230**	**1.6**	34.62	"	"	9100	25700	51	1020	1.95
35.5	**1470**	**1.45**	41.60	"	"	9600	27100	42.5	1230	1.75
32	**1640**	**1.35**	46.16	"	"	9900	28000	38.5	1360	1.65
27	**1940**	**1.2**	54.44	"	"	10500	29700	32.5	1610	1.45
24.5	**2100**	**1.1**	60.40	"	"	11100	31400	29.5	1780	1.3
20.5	**2550**	**0.9**	72.15	"	"	12000	34000	24.5	2100	1.1
18.5	**2800**	**0.82**	80.05	"	"	12600	35600	22	2350	0.98

P = 5.5 kW

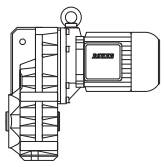

50 Hz			i	Type	m	F_{RN}	F_{RV}	60 Hz		
n_2	M_2	f_B						n_2	M_2	f_B
1/min	Nm				kg	N	N	1/min	Nm	
31	**1690**	**3.1**	47.82	**BF70-../DHE11LA4C**	236	9100	34000	37	1410	3.7
26.5	**1980**	**2.6**	55.79	"	"	10200	36000	32	1640	3.2
24	**2150**	**2.4**	61.94	"	"	10800	37400	28.5	1840	2.8
20.5	**2550**	**2.0**	72.26	"	"	12000	39600	24.5	2100	2.5
18	**2900**	**1.8**	81.82	"	"	12800	41300	22	2350	2.2
15.5	**3350**	**1.55**	95.46	"	"	14000	43700	18.5	2800	1.85
14	**3750**	**1.4**	105.2	"	"	14700	45100	17	3050	1.7
12	**4350**	**1.2**	122.7	"	"	16100	47700	14.5	3600	1.45
11	**4750**	**1.1**	133.0	**BF70Z-../DHE11LA4C**	262	16100	47700	13.5	3850	1.35
9.5	**5500**	**0.95**	154.0	"	"	16100	47700	11.5	4550	1.15
8.2	**6400**	**0.81**	179.7	"	"	16100	47700	9.8	5300	0.98
18	**2900**	**3.3**	83.16	**BF80-../DHE11LA4C**	332	18400	65100	21.5	2400	4.0
15.5	**3350**	**2.8**	94.38	"	"	20300	68500	19	2750	3.5
14	**3750**	**2.5**	107.9	"	"	22400	72300	16.5	3150	3.0
12	**4350**	**2.2**	122.4	"	"	24500	75000	14.5	3600	2.6
10.5	**5000**	**1.9**	139.7	"	"	26700	75000	13	4000	2.4
9.3	**5600**	**1.7**	158.5	"	"	29000	75000	11.5	4550	2.1
8.0	**6500**	**1.45**	184.5	"	"	31800	75000	9.6	5400	1.75
7.0	**7500**	**1.25**	209.4	"	"	34300	75000	8.5	6100	1.55
6.2	**8400**	**1.15**	237.1	"	"	36900	75000	7.5	7000	1.35
5.5	**9500**	**1.0**	269.1	"	"	39600	75000	6.6	7900	1.2
5.1	**10200**	**1.05**	291.7	**BF80Z-../DHE11LA4C**	379	39600	75000	6.1	8600	1.2
4.3	**12200**	**0.86**	347.3	"	"	39600	75000	5.1	10200	1.05
9.5	**5500**	**3.1**	154.8	**BF90-../DHE11LA4C**	585	30100	100800	11.5	4550	3.7
8.2	**6400**	**2.6**	178.6	"	"	33400	106700	9.9	5300	3.2
7.4	**7000**	**2.4**	198.8	"	"	36000	111300	8.9	5900	2.8
6.3	**8300**	**2.0**	232.6	"	"	39900	118300	7.6	6900	2.4
5.7	**9200**	**1.85**	259.0	"	"	42800	120000	6.8	7700	2.2
5.5	**9500**	**1.95**	269.8	**BF90Z-../DHE11LA4C**	645	42800	120000	6.6	7900	2.3
4.9	**10700**	**1.75**	300.4	"	"	42800	120000	5.9	8900	2.1
4.3	**12200**	**1.5**	343.6	"	"	42800	120000	5.2	10100	1.85
3.9	**13400**	**1.4**	382.6	"	"	42800	120000	4.7	11100	1.65
3.2	**16400**	**1.15**	456.7	"	"	42800	120000	3.9	13400	1.4
2.9	**18100**	**1.0**	508.5	"	"	42800	120000	3.5	15000	1.25
2.5	**21000**	**0.88**	591.1	"	"	42800	120000	3.0	17500	1.05
2.3	**22800**	**0.81**	658.1	"	"	42800	120000	2.7	19400	0.95

P = 7.5 kW

50 Hz			i	Type	m	F_{RN}	F_{RV}	60 Hz		
n_2	M_2	f_B						n_2	M_2	f_B
1/min	Nm				kg	N	N	1/min	Nm	
275	**260**	**1.9**	5.38	**BF50-../DHE13LA4**	136	4500	-	330	215	2.3
190	**375**	**1.5**	7.71	"	"	5100	-	230	310	1.8
137	**520**	**1.3**	10.68	"	"	5600	-	165	430	1.55
100	**710**	**1.1**	14.65	"	"	6100	-	121	590	1.35
88	**810**	**1.15**	16.70	"	"	6200	-	106	670	1.4
79	**900**	**1.1**	18.68	"	"	6400	-	95	750	1.35
64	**1110**	**1.0**	23.14	"	"	6800	-	77	930	1.2
57	**1250**	**0.93**	25.88	"	"	7100	-	69	1030	1.15
46.5	**1540**	**0.82**	31.73	"	"	7500	-	56	1270	1.0
280	**255**	**3.0**	5.22	**BF60-../DHE13LA4**	169	5200	14800	340	210	3.6
189	**375**	**2.3**	7.74	"	"	6000	16900	230	310	2.8
142	**500**	**2.0**	10.31	"	"	6500	18400	171	415	2.4
103	**690**	**1.75**	14.24	"	"	7100	20000	124	570	2.1
87	**820**	**1.75**	16.96	"	"	7300	20600	104	680	2.1
78	**910**	**1.65**	18.81	"	"	7600	21500	94	760	2.0
65	**1100**	**1.5**	22.58	"	"	8000	22600	78	910	1.8

P = 7.5 kW

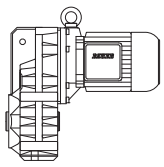

50 Hz			i	Type	m	F_{RN}	F_{RV}	60 Hz		
n_2	M_2	f_B						n_2	M_2	f_B
1/min	Nm				kg	N	N	1/min	Nm	
59	**1210**	**1.45**	25.05	**BF60-../DHE13LA4**	"	8200	23200	71	1000	1.75
47	**1520**	**1.25**	31.20	"	"	8800	24900	57	1250	1.5
42.5	**1680**	**1.2**	34.62	"	"	9100	25700	51	1400	1.4
35.5	**2000**	**1.05**	41.60	"	"	9600	27100	42.5	1680	1.25
32	**2200**	**1.0**	46.16	"	"	9900	28000	38.5	1860	1.2
27	**2650**	**0.87**	54.44	"	"	10500	29700	32.5	2200	1.05
40	**1790**	**2.9**	36.88	**BF70-../DHE13LA4**	248	7900	31100	48	1490	3.5
34	**2100**	**2.5**	43.02	"	"	8700	32800	41	1740	3.0
31	**2300**	**2.3**	47.82	"	"	9100	34000	37	1930	2.7
26.5	**2700**	**1.95**	55.79	"	"	10200	36000	32	2200	2.4
24	**2950**	**1.75**	61.94	"	"	10800	37400	28.5	2500	2.1
20.5	**3450**	**1.5**	72.26	"	"	12000	39600	24.5	2900	1.8
18	**3950**	**1.3**	81.82	"	"	12800	41300	22	3250	1.6
15.5	**4600**	**1.15**	95.46	"	"	14000	43700	18.5	3850	1.35
14	**5100**	**1.0**	105.2	"	"	14700	45100	17	4200	1.25
12	**5900**	**0.88**	122.7	"	"	16100	47700	14.5	4900	1.05
11	**6500**	**0.8**	133.0	**BF70Z-../DHE13LA4**	273	16100	47700	13.5	5300	0.98
24	**2950**	**3.2**	61.55	**BF80-../DHE13LA4**	344	14800	58100	29	2450	3.8
21	**3400**	**2.8**	69.86	"	"	15900	60600	25.5	2800	3.4
18	**3950**	**2.4**	83.16	"	"	18400	65100	21.5	3300	2.9
15.5	**4600**	**2.1**	94.38	"	"	20300	68500	19	3750	2.5
14	**5100**	**1.85**	107.9	"	"	22400	72300	16.5	4300	2.2
12	**5900**	**1.6**	122.4	"	"	24500	75000	14.5	4900	1.95
10.5	**6800**	**1.4**	139.7	"	"	26700	75000	13	5500	1.75
9.3	**7700**	**1.25**	158.5	"	"	29000	75000	11.5	6200	1.55
8.0	**8900**	**1.05**	184.5	"	"	31800	75000	9.6	7400	1.3
7.0	**10200**	**0.93**	209.4	"	"	34300	75000	8.5	8400	1.15
6.2	**11500**	**0.83**	237.1	"	"	36900	75000	7.5	9500	1.0
14	**5100**	**3.3**	107.5	**BF90-../DHE13LA4**	596	22300	86900	16.5	4300	3.9
12.5	**5700**	**2.9**	119.7	"	"	24500	90800	15	4750	3.5
10.5	**6800**	**2.5**	139.1	"	"	27700	96300	13	5500	3.1
9.5	**7500**	**2.2**	154.8	"	"	30100	100800	11.5	6200	2.7
8.2	**8700**	**1.95**	178.6	"	"	33400	106700	9.9	7200	2.3
7.4	**9600**	**1.75**	198.8	"	"	36000	111300	8.9	8000	2.1
6.3	**11300**	**1.5**	232.6	"	"	39900	118300	7.6	9400	1.8
5.7	**12500**	**1.35**	259.0	"	"	42800	120000	6.8	10500	1.6
5.5	**13000**	**1.4**	269.8	**BF90Z-../DHE13LA4**	657	42800	120000	6.6	10800	1.7
4.9	**14600**	**1.25**	300.4	"	"	42800	120000	5.9	12100	1.55
4.3	**16600**	**1.1**	343.6	"	"	42800	120000	5.2	13700	1.35
3.9	**18300**	**1.0**	382.6	"	"	42800	120000	4.7	15200	1.2
3.2	**22300**	**0.83**	456.7	"	"	42800	120000	3.9	18300	1.0

P = 9.5 kW

50 Hz			i	Type	m	F_{RN}	F_{RV}	60 Hz		
n_2	M_2	f_B						n_2	M_2	f_B
1/min	Nm				kg	N	N	1/min	Nm	
275	**325**	**1.55**	5.38	**BF50-../DHE16MA4**	181	4500	-	330	270	1.85
191	**475**	**1.2**	7.71	"	"	5100	-	230	390	1.45
138	**650**	**1.05**	10.68	"	"	5600	-	166	540	1.25
101	**890**	**0.89**	14.65	"	"	6100	-	121	740	1.05
89	**1010**	**0.94**	16.70	"	"	6200	-	106	850	1.1
79	**1140**	**0.88**	18.68	"	"	6400	-	95	950	1.05
285	**315**	**2.4**	5.22	**BF60-../DHE16MA4**	214	5200	14800	340	265	2.8
190	**475**	**1.85**	7.74	"	"	6000	16900	230	390	2.2
143	**630**	**1.6**	10.31	"	"	6500	18400	172	520	1.95
104	**870**	**1.35**	14.24	"	"	7100	20000	125	720	1.65

P = 9.5 kW

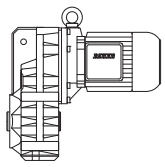

50 Hz			i	Type	m	F_{RN}	F_{RV}	60 Hz		
n_2	M_2	f_B						n_2	M_2	f_B
1/min	Nm				kg	N	N	1/min	Nm	
87	**1040**	**1.4**	16.96	**BF60-../DHE16MA4**	"	7300	20600	105	860	1.7
79	**1140**	**1.35**	18.81	"	"	7600	21500	95	950	1.6
66	**1370**	**1.2**	22.58	"	"	8000	22600	79	1140	1.45
59	**1530**	**1.15**	25.05	"	"	8200	23200	71	1270	1.35
47.5	**1910**	**0.99**	31.20	"	"	8800	24900	57	1590	1.2
42.5	**2100**	**0.95**	34.62	"	"	9100	25700	52	1740	1.15
35.5	**2550**	**0.84**	41.60	"	"	9600	27100	43	2100	1.0
32	**2800**	**0.8**	46.16	"	"	9900	28000	38.5	2350	0.95
60	**1510**	**3.3**	24.55	**BF70-../DHE16MA4**	297	7000	27700	73	1240	4.1
54	**1680**	**3.1**	27.29	"	"	7000	28400	65	1390	3.7
46.5	**1950**	**2.7**	31.84	"	"	7700	30000	56	1620	3.2
40	**2250**	**2.3**	36.88	"	"	7900	31100	48	1890	2.8
34.5	**2600**	**2.0**	43.02	"	"	8700	32800	41.5	2150	2.4
31	**2900**	**1.8**	47.82	"	"	9100	34000	37.5	2400	2.2
26.5	**3400**	**1.55**	55.79	"	"	10200	36000	32	2800	1.85
24	**3750**	**1.4**	61.94	"	"	10800	37400	29	3100	1.7
20.5	**4400**	**1.2**	72.26	"	"	12000	39600	24.5	3700	1.4
18	**5000**	**1.05**	81.82	"	"	12800	41300	22	4100	1.25
15.5	**5800**	**0.9**	95.46	"	"	14000	43700	19	4750	1.1
14	**6400**	**0.81**	105.2	"	"	14700	45100	17	5300	0.98
31	**2900**	**3.0**	47.46	**BF80-../DHE16MA4**	393	13400	53700	37.5	2400	3.6
27.5	**3250**	**2.8**	53.86	"	"	14000	55800	33	2700	3.3
24	**3750**	**2.5**	61.55	"	"	14800	58100	29	3100	3.0
21.5	**4200**	**2.3**	69.86	"	"	15900	60600	25.5	3550	2.7
18	**5000**	**1.9**	83.16	"	"	18400	65100	21.5	4200	2.3
16	**5600**	**1.7**	94.38	"	"	20300	68500	19	4750	2.0
14	**6400**	**1.5**	107.9	"	"	22400	72300	16.5	5400	1.75
12.5	**7200**	**1.3**	122.4	"	"	24500	75000	14.5	6200	1.55
11	**8200**	**1.15**	139.7	"	"	26700	75000	13	6900	1.4
9.3	**9700**	**0.98**	158.5	"	"	29000	75000	11.5	7800	1.2
8.0	**11300**	**0.84**	184.5	"	"	31800	75000	9.6	9400	1.0
16.5	**5400**	**3.1**	90.02	**BF90-../DHE16MA4**	640	18900	80600	20	4500	3.7
14	**6400**	**2.6**	107.5	"	"	22300	86900	16.5	5400	3.1
12.5	**7200**	**2.3**	119.7	"	"	24500	90800	15	6000	2.8
11	**8200**	**2.0**	139.1	"	"	27700	96300	13	6900	2.4
9.5	**9500**	**1.75**	154.8	"	"	30100	100800	11.5	7800	2.2
8.3	**10900**	**1.55**	178.6	"	"	33400	106700	10	9000	1.85
7.4	**12200**	**1.4**	198.8	"	"	36000	111300	9.0	10000	1.7
6.4	**14100**	**1.2**	232.6	"	"	39900	118300	7.7	11700	1.45
5.7	**15900**	**1.05**	259.0	"	"	42800	120000	6.9	13100	1.3
5.5	**16400**	**1.15**	269.8	**BF90Z-../DHE16MA4**	702	42800	120000	6.6	13700	1.35
4.9	**18500**	**1.0**	300.4	"	"	42800	120000	5.9	15300	1.2
4.3	**21000**	**0.88**	343.6	"	"	42800	120000	5.2	17400	1.05
3.9	**23200**	**0.8**	382.6	"	"	42800	120000	4.7	19300	0.96

P = 11 kW

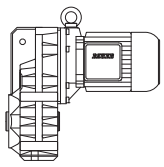

50 Hz			i	Type	m	F_{RN}	F_{RV}	60 Hz		
n_2	M_2	f_B						n_2	M_2	f_B
1/min	Nm				kg	N	N	1/min	Nm	
275	**380**	**1.3**	5.38	**BF50-../DHE16LA4**	194	4500	-	330	315	1.6
191	**550**	**1.05**	7.71	"	"	5100	-	230	455	1.25
138	**760**	**0.89**	10.68	"	"	5600	-	166	630	1.05
89	**1180**	**0.81**	16.70	"	"	6200	-	106	990	0.96
285	**365**	**2.1**	5.22	**BF60-../DHE16LA4**	227	5200	14800	340	305	2.5
190	**550**	**1.6**	7.74	"	"	6000	16900	230	455	1.9
143	**730**	**1.4**	10.31	"	"	6500	18400	172	610	1.65
104	**1010**	**1.2**	14.24	"	"	7100	20000	125	840	1.4
87	**1200**	**1.2**	16.96	"	"	7300	20600	105	1000	1.45
79	**1320**	**1.15**	18.81	"	"	7600	21500	95	1100	1.4
66	**1590**	**1.05**	22.58	"	"	8000	22600	79	1320	1.25
59	**1780**	**0.97**	25.05	"	"	8200	23200	71	1470	1.2
47.5	**2200**	**0.86**	31.20	"	"	8800	24900	57	1840	1.05
42.5	**2450**	**0.81**	34.62	"	"	9100	25700	52	2000	0.99
70	**1500**	**3.1**	21.04	**BF70-../DHE16LA4**	310	6400	26300	85	1230	3.7
60	**1750**	**2.9**	24.55	"	"	7000	27700	73	1430	3.5
54	**1940**	**2.7**	27.29	"	"	7000	28400	65	1610	3.2
46.5	**2250**	**2.3**	31.84	"	"	7700	30000	56	1870	2.8
40	**2600**	**2.0**	36.88	"	"	7900	31100	48	2150	2.4
34.5	**3000**	**1.75**	43.02	"	"	8700	32800	41.5	2500	2.1
31	**3350**	**1.55**	47.82	"	"	9100	34000	37.5	2800	1.85
26.5	**3950**	**1.3**	55.79	"	"	10200	36000	32	3250	1.6
24	**4350**	**1.2**	61.94	"	"	10800	37400	29	3600	1.45
20.5	**5100**	**1.0**	72.26	"	"	12000	39600	24.5	4250	1.2
18	**5800**	**0.9**	81.82	"	"	12800	41300	22	4750	1.1
44	**2350**	**3.3**	33.61	**BF80-../DHE16LA4**	406	11700	48400	53	1980	3.9
39	**2650**	**3.0**	38.14	"	"	12200	50300	46.5	2250	3.6
31	**3350**	**2.6**	47.46	"	"	13400	53700	37.5	2800	3.1
27.5	**3800**	**2.4**	53.86	"	"	14000	55800	33	3150	2.8
24	**4350**	**2.1**	61.55	"	"	14800	58100	29	3600	2.6
21.5	**4850**	**1.95**	69.86	"	"	15900	60600	25.5	4100	2.3
18	**5800**	**1.65**	83.16	"	"	18400	65100	21.5	4850	1.95
16	**6500**	**1.45**	94.38	"	"	20300	68500	19	5500	1.75
14	**7500**	**1.25**	107.9	"	"	22400	72300	16.5	6300	1.5
12.5	**8400**	**1.15**	122.4	"	"	24500	75000	14.5	7200	1.3
11	**9500**	**1.0**	139.7	"	"	26700	75000	13	8000	1.2
9.3	**11200**	**0.85**	158.5	"	"	29000	75000	11.5	9100	1.05
21	**5000**	**3.2**	70.69	**BF90-../DHE16LA4**	654	16800	74700	25.5	4100	3.9
18.5	**5600**	**3.0**	80.85	"	"	17500	77500	22	4750	3.5
16.5	**6300**	**2.7**	90.02	"	"	18900	80600	20	5200	3.2
14	**7500**	**2.2**	107.5	"	"	22300	86900	16.5	6300	2.7
12.5	**8400**	**2.0**	119.7	"	"	24500	90800	15	7000	2.4
11	**9500**	**1.75**	139.1	"	"	27700	96300	13	8000	2.1
9.5	**11000**	**1.55**	154.8	"	"	30100	100800	11.5	9100	1.85
8.3	**12600**	**1.35**	178.6	"	"	33400	106700	10	10500	1.6
7.4	**14100**	**1.2**	198.8	"	"	36000	111300	9.0	11600	1.45
6.4	**16400**	**1.0**	232.6	"	"	39900	118300	7.7	13600	1.25
5.7	**18400**	**0.91**	259.0	"	"	42800	120000	6.9	15200	1.1
5.5	**19100**	**0.97**	269.8	**BF90Z-../DHE16LA4**	715	42800	120000	6.6	15900	1.15
4.9	**21400**	**0.86**	300.4	"	"	42800	120000	5.9	17800	1.05

BF-series paralle shaft geared motors

Selection - parallel shaft geared motors DHE - IE2

P = 15 kW

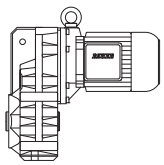

50 Hz			i	Type	m	F_{RN}	F_{RV}	60 Hz		
n_2	M_2	f_B						n_2	M_2	f_B
1/min	Nm				kg	N	N	1/min	Nm	
275	**520**	**0.96**	5.38	**BF50-../DHE16XA4**	204	4500	-	330	430	1.15
285	**500**	**1.5**	5.22	**BF60-../DHE16XA4**	237	5200	14800	340	420	1.8
190	**750**	**1.15**	7.74	"	"	6000	16900	230	620	1.4
143	**1000**	**1.0**	10.31	"	"	6500	18400	172	830	1.2
104	**1370**	**0.87**	14.24	"	"	7100	20000	125	1140	1.05
87	**1640**	**0.88**	16.96	"	"	7300	20600	105	1360	1.05
79	**1810**	**0.84**	18.81	"	"	7600	21500	95	1500	1.0
99	**1440**	**2.5**	14.90	**BF70-../DHE16XA4**	320	5900	24000	119	1200	3.0
85	**1680**	**2.5**	17.39	"	"	6200	25000	102	1400	3.0
70	**2000**	**2.3**	21.04	"	"	6400	26300	85	1680	2.7
60	**2350**	**2.1**	24.55	"	"	7000	27700	73	1960	2.6
54	**2650**	**1.95**	27.29	"	"	7000	28400	65	2200	2.4
46.5	**3050**	**1.7**	31.84	"	"	7700	30000	56	2550	2.0
40	**3550**	**1.45**	36.88	"	"	7900	31100	48	2950	1.75
34.5	**4150**	**1.25**	43.02	"	"	8700	32800	41.5	3450	1.5
31	**4600**	**1.15**	47.82	"	"	9100	34000	37.5	3800	1.35
26.5	**5400**	**0.96**	55.79	"	"	10200	36000	32	4450	1.15
24	**5900**	**0.88**	61.94	"	"	10800	37400	29	4900	1.05
90	**1590**	**3.3**	16.49	**BF80-../DHE16XA4**	416	11400	41400	108	1320	4.0
64	**2200**	**2.9**	23.29	"	"	11800	44900	76	1880	3.4
49	**2900**	**2.5**	30.21	"	"	12300	47900	59	2400	3.0
44	**3250**	**2.4**	33.61	"	"	11700	48400	53	2700	2.9
39	**3650**	**2.2**	38.14	"	"	12200	50300	46.5	3050	2.6
31	**4600**	**1.85**	47.46	"	"	13400	53700	37.5	3800	2.3
27.5	**5200**	**1.7**	53.86	"	"	14000	55800	33	4300	2.1
24	**5900**	**1.6**	61.55	"	"	14800	58100	29	4900	1.9
21.5	**6600**	**1.45**	69.86	"	"	15900	60600	25.5	5600	1.7
18	**7900**	**1.2**	83.16	"	"	18400	65100	21.5	6600	1.45
16	**8900**	**1.05**	94.38	"	"	20300	68500	19	7500	1.25
14	**10200**	**0.93**	107.9	"	"	22400	72300	16.5	8600	1.1
12.5	**11400**	**0.83**	122.4	"	"	24500	75000	14.5	9800	0.97
32	**4450**	**3.2**	46.43	**BF90-../DHE16XA4**	664	13800	65500	38.5	3700	3.8
28.5	**5000**	**2.9**	51.70	"	"	14600	67800	34.5	4150	3.5
23.5	**6000**	**2.6**	63.49	"	"	15800	72000	28	5100	3.0
21	**6800**	**2.3**	70.69	"	"	16800	74700	25.5	5600	2.8
18.5	**7700**	**2.1**	80.85	"	"	17500	77500	22	6500	2.5
16.5	**8600**	**1.95**	90.02	"	"	18900	80600	20	7100	2.4
14	**10200**	**1.65**	107.5	"	"	22300	86900	16.5	8600	1.95
12.5	**11400**	**1.45**	119.7	"	"	24500	90800	15	9500	1.75
11	**13000**	**1.3**	139.1	"	"	27700	96300	13	11000	1.55
9.5	**15000**	**1.1**	154.8	"	"	30100	100800	11.5	12400	1.35
8.3	**17200**	**0.98**	178.6	"	"	33400	106700	10	14300	1.15
7.4	**19300**	**0.87**	198.8	"	"	36000	111300	9.0	15900	1.05

P = 18.5 kW

50 Hz			i	Type	m	F_{RN}	F_{RV}	60 Hz		
n_2	M_2	f_B						n_2	M_2	f_B
1/min	Nm				kg	N	N	1/min	Nm	
285	**610**	**1.25**	5.22	**BF60-../DHE18LA4**	300	5200	14800	340	510	1.5
190	**920**	**0.94**	7.74	"	"	6000	16900	230	760	1.15
143	**1230**	**0.82**	10.31	"	"	6500	18400	172	1020	0.99
143	**1230**	**2.0**	10.32	**BF70-../DHE18LA4**	377	4600	18700	172	1020	2.5
123	**1430**	**2.1**	12.04	"	"	4900	19700	148	1190	2.5

P = 18.5 kW

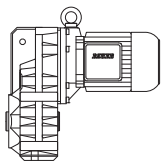

50 Hz			i	Type	m	F_{RN}	F_{RV}	60 Hz		
n_2	M_2	f_B						n_2	M_2	f_B
1/min	Nm				kg	N	N	1/min	Nm	
99	**1780**	**2.1**	14.90	**BF70-../DHE18LA4**	"	5900	24000	119	1480	2.5
85	**2050**	**2.1**	17.39	"	"	6200	25000	102	1730	2.5
70	**2500**	**1.85**	21.04	"	"	6400	26300	85	2050	2.2
60	**2900**	**1.75**	24.55	"	"	7000	27700	73	2400	2.1
54	**3250**	**1.6**	27.29	"	"	7000	28400	65	2700	1.95
46.5	**3750**	**1.4**	31.84	"	"	7700	30000	56	3150	1.65
40	**4400**	**1.2**	36.88	"	"	7900	31100	48	3650	1.4
34.5	**5100**	**1.0**	43.02	"	"	8700	32800	41.5	4250	1.2
31	**5600**	**0.93**	47.82	"	"	9100	34000	37.5	4700	1.1
129	**1360**	**2.7**	11.42	**BF80-../DHE18LA4**	473	8900	32200	155	1130	3.2
90	**1960**	**2.7**	16.49	"	"	11400	41400	108	1630	3.3
64	**2750**	**2.3**	23.29	"	"	11800	44900	76	2300	2.7
49	**3600**	**2.0**	30.21	"	"	12300	47900	59	2950	2.4
44	**4000**	**1.95**	33.61	"	"	11700	48400	53	3300	2.4
39	**4500**	**1.8**	38.14	"	"	12200	50300	46.5	3750	2.2
31	**5600**	**1.55**	47.46	"	"	13400	53700	37.5	4700	1.85
27.5	**6400**	**1.4**	53.86	"	"	14000	55800	33	5300	1.7
24	**7300**	**1.25**	61.55	"	"	14800	58100	29	6000	1.55
21.5	**8200**	**1.15**	69.86	"	"	15900	60600	25.5	6900	1.4
18	**9800**	**0.97**	83.16	"	"	18400	65100	21.5	8200	1.15
16	**11000**	**0.86**	94.38	"	"	20300	68500	19	9200	1.05
44	**4000**	**3.2**	33.71	**BF90-../DHE18LA4**	725	11900	59300	53	3300	3.9
39.5	**4450**	**3.0**	37.54	"	"	12700	61500	47.5	3700	3.6
32	**5500**	**2.6**	46.43	"	"	13800	65500	38.5	4550	3.1
28.5	**6100**	**2.4**	51.70	"	"	14600	67800	34.5	5100	2.8
23.5	**7500**	**2.1**	63.49	"	"	15800	72000	28	6300	2.4
21	**8400**	**1.9**	70.69	"	"	16800	74700	25.5	6900	2.3
18.5	**9500**	**1.75**	80.85	"	"	17500	77500	22	8000	2.1
16.5	**10700**	**1.55**	90.02	"	"	18900	80600	20	8800	1.9
14	**12600**	**1.35**	107.5	"	"	22300	86900	16.5	10700	1.55
12.5	**14100**	**1.2**	119.7	"	"	24500	90800	15	11700	1.45
11	**16000**	**1.05**	139.1	"	"	27700	96300	13	13500	1.25
9.5	**18500**	**0.91**	154.8	"	"	30100	100800	11.5	15300	1.1

P = 22 kW

50 Hz			i	Type	m	F_{RN}	F_{RV}	60 Hz		
n_2	M_2	f_B						n_2	M_2	f_B
1/min	Nm				kg	N	N	1/min	Nm	
285	**730**	**1.05**	5.22	**BF60-../DHE18XA4**	318	5200	14800	340	610	1.25
143	**1460**	**1.7**	10.32	**BF70-../DHE18XA4**	395	4600	18700	172	1220	2.1
123	**1700**	**1.75**	12.04	"	"	4900	19700	148	1410	2.1
99	**2100**	**1.75**	14.90	"	"	5900	24000	119	1760	2.1
85	**2450**	**1.75**	17.39	"	"	6200	25000	102	2050	2.1
70	**3000**	**1.55**	21.04	"	"	6400	26300	85	2450	1.9
60	**3500**	**1.45**	24.55	"	"	7000	27700	73	2850	1.75
54	**3850**	**1.35**	27.29	"	"	7000	28400	65	3200	1.65
46.5	**4500**	**1.15**	31.84	"	"	7700	30000	56	3750	1.4
40	**5200**	**1.0**	36.88	"	"	7900	31100	48	4350	1.2
34.5	**6000**	**0.87**	43.02	"	"	8700	32800	41.5	5000	1.05
129	**1620**	**2.3**	11.42	**BF80-../DHE18XA4**	491	8900	32200	155	1350	2.7
90	**2300**	**2.3**	16.49	"	"	11400	41400	108	1940	2.7
64	**3250**	**1.95**	23.29	"	"	11800	44900	76	2750	2.3
49	**4250**	**1.65**	30.21	"	"	12300	47900	59	3550	2.0
44	**4750**	**1.65**	33.61	"	"	11700	48400	53	3950	1.95
39	**5300**	**1.5**	38.14	"	"	12200	50300	46.5	4500	1.8
31	**6700**	**1.3**	47.46	"	"	13400	53700	37.5	5600	1.55

P = 22 kW

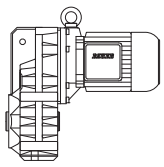

50 Hz			i	Type	m	F_{RN}	F_{RV}	60 Hz		
n_2	M_2	f_B						n_2	M_2	f_B
1/min	Nm				kg	N	N	1/min	Nm	
27.5	**7600**	**1.2**	53.86	**BF80-../DHE18XA4**	"	14000	55800	33	6300	1.4
24	**8700**	**1.05**	61.55	"	"	14800	58100	29	7200	1.3
21.5	**9700**	**0.98**	69.86	"	"	15900	60600	25.5	8200	1.15
18	**11600**	**0.82**	83.16	"	"	18400	65100	21.5	9700	0.98
44	**4750**	**2.7**	33.71	**BF90-../DHE18XA4**	743	11900	59300	53	3950	3.3
39.5	**5300**	**2.5**	37.54	"	"	12700	61500	47.5	4400	3.0
32	**6500**	**2.2**	46.43	"	"	13800	65500	38.5	5400	2.6
28.5	**7300**	**2.0**	51.70	"	"	14600	67800	34.5	6000	2.4
23.5	**8900**	**1.75**	63.49	"	"	15800	72000	28	7500	2.1
21	**10000**	**1.6**	70.69	"	"	16800	74700	25.5	8200	1.95
18.5	**11300**	**1.45**	80.85	"	"	17500	77500	22	9500	1.75
16.5	**12700**	**1.3**	90.02	"	"	18900	80600	20	10500	1.6
14	**15000**	**1.1**	107.5	"	"	22300	86900	16.5	12700	1.3
12.5	**16800**	**1.0**	119.7	"	"	24500	90800	15	14000	1.2
11	**19100**	**0.88**	139.1	"	"	27700	96300	13	16100	1.05

P = 30 kW

50 Hz			i	Type	m	F_{RN}	F_{RV}	60 Hz		
n_2	M_2	f_B						n_2	M_2	f_B
1/min	Nm				kg	N	N	1/min	Nm	
144	**1980**	**1.25**	10.32	**BF70-../DHENF20LG4**	579	4600	18700	174	1640	1.55
123	**2300**	**1.3**	12.04	"	"	4900	19700	149	1920	1.55
100	**2850**	**1.3**	14.90	"	"	5900	24000	121	2350	1.55
86	**3300**	**1.3**	17.39	"	"	6200	25000	103	2750	1.55
71	**4000**	**1.15**	21.04	"	"	6400	26300	86	3300	1.4
61	**4650**	**1.1**	24.55	"	"	7000	27700	73	3900	1.3
55	**5200**	**1.0**	27.29	"	"	7000	28400	66	4300	1.2
46.5	**6100**	**0.85**	31.84	"	"	7700	30000	57	5000	1.05
130	**2200**	**1.65**	11.42	**BF80-../DHENF20LG4**	675	8900	32200	157	1820	2.0
90	**3150**	**1.7**	16.49	"	"	11400	41400	109	2600	2.0
64	**4450**	**1.4**	23.29	"	"	11800	44900	77	3700	1.7
49	**5800**	**1.25**	30.21	"	"	12300	47900	60	4750	1.5
44.5	**6400**	**1.2**	33.61	"	"	11700	48400	54	5300	1.45
39	**7300**	**1.1**	38.14	"	"	12200	50300	47	6000	1.35
31.5	**9000**	**0.96**	47.46	"	"	13400	53700	38	7500	1.15
27.5	**10400**	**0.86**	53.86	"	"	14000	55800	33.5	8500	1.05
24.5	**11600**	**0.8**	61.55	"	"	14800	58100	29.5	9700	0.96
119	**2400**	**3.0**	12.45	**BF90-../DHENF20LG4**	930	8000	39700	144	1980	3.6
86	**3300**	**3.1**	17.39	"	"	10000	49500	103	2750	3.7
62	**4600**	**2.4**	23.95	"	"	11100	54300	75	3800	3.0
44	**6500**	**2.0**	33.71	"	"	11900	59300	54	5300	2.4
39.5	**7200**	**1.85**	37.54	"	"	12700	61500	48	5900	2.2
32	**8900**	**1.6**	46.43	"	"	13800	65500	39	7300	1.95
29	**9800**	**1.45**	51.70	"	"	14600	67800	35	8100	1.8
23.5	**12100**	**1.25**	63.49	"	"	15800	72000	28.5	10000	1.55
21	**13600**	**1.15**	70.69	"	"	16800	74700	25.5	11200	1.4
18.5	**15400**	**1.05**	80.85	"	"	17500	77500	22.5	12700	1.3
16.5	**17300**	**0.97**	90.02	"	"	18900	80600	20	14300	1.15
14	**20400**	**0.82**	107.5	"	"	22300	86900	17	16800	1.0

P = 37 kW

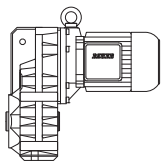

50 Hz			i	Type	m	F_{RN}	F_{RV}	60 Hz		
n_2	M_2	f_B						n_2	M_2	f_B
1/min	Nm				kg	N	N	1/min	Nm	
144	**2450**	**1.05**	10.32	**BF70-..-C/DHENF22SG4**	694	4600	18700	174	2000	1.25
123	**2850**	**1.05**	12.04	"	"	4900	19700	149	2350	1.25
100	**3500**	**1.05**	14.90	"	"	5900	24000	121	2900	1.25
86	**4100**	**1.05**	17.39	"	"	6200	25000	103	3400	1.25
130	**2700**	**1.35**	11.42	**BF80-..-C/DHENF22SG4**	790	8900	32200	157	2250	1.65
90	**3900**	**1.35**	16.49	"	"	11400	41400	109	3200	1.65
64	**5500**	**1.15**	23.29	"	"	11800	44900	77	4550	1.4
119	**2950**	**2.4**	12.45	**BF90-..-C/DHENF22SG4**	1048	8000	39700	144	2450	2.9
86	**4100**	**2.5**	17.39	"	"	10000	49500	103	3400	3.0
62	**5600**	**2.0**	23.95	"	"	11100	54300	75	4700	2.4
44	**8000**	**1.6**	33.71	"	"	11900	59300	54	6500	2.0
39.5	**8900**	**1.5**	37.54	"	"	12700	61500	48	7300	1.8
32	**11000**	**1.3**	46.43	"	"	13800	65500	39	9000	1.55
29	**12100**	**1.2**	51.70	"	"	14600	67800	35	10000	1.45
23.5	**15000**	**1.05**	63.49	"	"	15800	72000	28.5	12300	1.25

P = 45 kW

50 Hz			i	Type	m	F_{RN}	F_{RV}	60 Hz		
n_2	M_2	f_B						n_2	M_2	f_B
1/min	Nm				kg	N	N	1/min	Nm	
130	**3300**	**1.1**	11.42	**BF80-..-C/DHENF22MG4**	830	8900	32200	157	2700	1.35
90	**4750**	**1.1**	16.49	"	"	11400	41400	109	3900	1.35
119	**3600**	**2.0**	12.45	**BF90-..-C/DHENF22MG4**	1088	8000	39700	144	2950	2.4
86	**4950**	**2.0**	17.39	"	"	10000	49500	103	4150	2.4
62	**6900**	**1.65**	23.95	"	"	11100	54300	75	5700	1.95
44	**9700**	**1.35**	33.71	"	"	11900	59300	54	7900	1.65
39.5	**10800**	**1.2**	37.54	"	"	12700	61500	48	8900	1.5
32	**13400**	**1.05**	46.43	"	"	13800	65500	39	11000	1.3

P = 55 kW

50 Hz			i	Type	m	F_{RN}	F_{RV}	60 Hz		
n_2	M_2	f_B						n_2	M_2	f_B
1/min	Nm				kg	N	N	1/min	Nm	
119	**4400**	**1.65**	12.45	**BF90-..-C/DHENF25SG4**	1144	8000	39700	144	3600	2.0
86	**6100**	**1.65**	17.39	"	"	10000	49500	103	5000	2.0
62	**8400**	**1.35**	23.95	"	"	11100	54300	75	7000	1.6
44	**11900**	**1.1**	33.71	"	"	11900	59300	54	9700	1.35
39.5	**13200**	**1.0**	37.54	"	"	12700	61500	48	10900	1.2

P = 75 kW

50 Hz			i	Type	m	F_{RN}	F_{RV}	60 Hz		
n_2	M_2	f_B						n_2	M_2	f_B
1/min	Nm				kg	N	N	1/min	Nm	
119	**6000**	**1.2**	12.45	**BF90-..-C/DHENF25MG4**	1144	8000	39700	144	4950	1.45
86	**8300**	**1.2**	17.39	"	"	10000	49500	103	6900	1.45

BF-series paralle shaft geared motors

Selection - parallel shaft geared motors with SN input

M = 68 .. 95 Nm

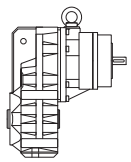

50 Hz			i	Type	F_{RN}	F_{RV}	permissible input speed [1/min]	
n_2	M_2	M_1					for mounting position	
(4 pole)	f_B=1,0						H1,H2,H3,H4,H5,B5,V1	H6,V3,V6
1/min	Nm	Nm			N	N	B3,B6,B7,B8,V5	
13	81	0,7	110,8	**BF06-..-SN**	5000		3600	1800
15	95	1	95,16	"	5000		"	"
17	95	1,1	83,61	"	4600		"	"
21	95	1,4	66,82	"	4300		"	"
24	95	1,6	58,33	"	4000		"	"
30	95	2,1	46,14	"	3800		"	"
37	95	2,5	37,69	"	3500		"	"
44	95	3	31,5	"	3200		"	"
52	95	3,6	26,76	"	3000		"	"
69	95	4,7	20,42	"	2700		"	"
82	95	5,6	16,99	"	2500		"	"
99	85	6	14,21	"	2100		"	"
116	75	6,2	12,07	"	2000		"	"
152	70	7,6	9,21	"	1900		"	"
183	68	8,9	7,66	"	1800		"	"

7

M = 138 .. 240 Nm

50 Hz			i	Type	F_{RN}	F_{RV}	permissible input speed [1/min]	
n_2	M_2	M_1					for mounting position	
(4 pole)	f_B=1,0						H1,H2,H3,H4,H5,B5,V1	H6,V3,V6
1/min	Nm	Nm			N	N	B3,B6,B7,B8,V5	
10	240	1,7	141,8	**BF10-..-SN**	6400		3600	1800
11	240	1,9	128,9	"	6200		"	"
11	240	1,9	123,5	"	6100		"	"
12	240	2,1	112,3	"	5900		"	"
14	240	2,4	99,97	"	5600		"	"
15	240	2,6	90,91	"	5400		"	"
16	240	2,8	85,27	"	5300		"	"
18	240	3,1	77,55	"	5100		"	"
21	240	3,5	67,69	"	4900		"	"
23	240	3,9	61,55	"	4700		"	"
25	240	4,3	56,39	"	4550		"	"
27	240	4,7	51,28	"	4400		"	"
30	240	5,1	47,35	"	4250		"	"
33	240	5,6	43,06	"	4100		"	"
35	240	6	39,75	"	3950		"	"
39	240	6,6	36,15	"	3800		"	"
45	240	7,7	31,31	"	3600		"	"
49	240	8,4	28,47	"	3450		"	"
55	240	9,4	25,6	"	3350		"	"
60	240	10	23,28	"	3200		"	"
70	240	12	20,05	"	3000		"	"
77	240	13	18,23	"	2900		"	"
93	183	12	15,04	"	2800		"	"
118	183	15	11,84	"	2500		"	"
144	177	18	9,69	"	2350		"	"
185	153	20	7,58	"	2200		"	"
250	138	25	5,6	"	1950		"	"

M = 200 .. 420 Nm

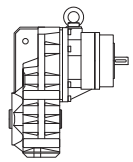

50 Hz			i	Type	F_{RN}	F_{RV}	permissible input speed [1/min]	
n_2	M_2	M_1					for mounting position	
(4 pole)	f_B=1,0						H1,H2,H3,H4,H5,B5,V1	H6,V3,V6
1/min	Nm	Nm			N	N	B3,B6,B7,B8,V5	
10	420	3,1	135,9	**BF20-..-SN**	7900		3600	1800
11	420	3,4	123,5	"	7600		"	"
13	420	3,8	110,2	"	7300		"	"
14	420	4,2	100,2	"	7000		"	"
15	420	4,4	96,08	"	6900		"	"
16	420	4,8	87,31	"	6600		"	"
18	420	5,5	76,69	"	6300		"	"
20	420	6	69,7	"	6100		"	"
22	420	6,6	64,08	"	5900		"	"
24	420	7,2	58,24	"	5600		"	"
26	420	7,9	53,43	"	5500		"	"
29	420	8,6	48,56	"	5200		"	"
31	420	9,2	45,9	"	5100		"	"
34	420	10	41,72	"	4950		"	"
39	420	12	35,85	"	4650		"	"
43	420	13	32,58	"	4450		"	"
46	420	14	30,4	"	4400		"	"
51	420	15	27,62	"	4150		"	"
58	400	16	24,25	"	3950		"	"
64	395	18	22,04	"	3800		"	"
76	370	20	18,45	"	3600		"	"
83	360	21	16,77	"	3500		"	"
90	305	20	15,54	"	3450		"	"
106	285	22	13,18	"	3300		"	"
133	255	24	10,51	"	3100		"	"
175	220	28	8	"	2850		"	"
232	200	33	6,04	"	2550		"	"

M = 263 .. 570 Nm

50 Hz			i	Type	F_{RN}	F_{RV}	permissible input speed [1/min]	
n_2	M_2	M_1					for mounting position	
(4 pole)	f_B=1,0						H1,H2,H3,H4,H5,B5,V1	H6,V3,V6
1/min	Nm	Nm			N	N	B3,B6,B7,B8,V5	
10	570	4,2	137,1	**BF30-..-SN**	7400		3600	1800
11	570	4,6	124,7	"	7100		"	"
12	570	4,8	118,3	"	7000		"	"
13	570	5,3	107,6	"	6700		"	"
15	570	6	95,79	"	6400		"	"
16	570	6,5	87,08	"	6200		"	"
18	570	7,2	79,34	"	5900		"	"
19	570	7,9	72,13	"	5700		"	"
21	570	8,5	67,28	"	5500		"	"
23	570	9,3	61,17	"	5300		"	"
24	570	10	57,41	"	5200		"	"
27	570	11	52,2	"	5000		"	"
31	570	13	45,1	"	4700		"	"
34	570	14	41,01	"	4500		"	"
36	570	15	38,49	"	4400		"	"
40	570	16	35	"	4200		"	"
45	570	18	31,05	"	4000		"	"
50	570	20	28,23	"	3800		"	"
58	550	23	24,03	"	3600		"	"
64	520	24	21,85	"	3500		"	"
72	500	26	19,41	"	3400		"	"
79	475	27	17,65	"	3300		"	"
88	405	25	16	"	3250		"	"
108	365	28	12,91	"	3050		"	"
140	320	32	9,99	"	2850		"	"
173	285	35	8,07	"	2650		"	"
221	263	41	6,34	"	2400		"	"

BF-series paralle shaft geared motors

Selection - parallel shaft geared motors with SN input

M = 335 .. 900 Nm

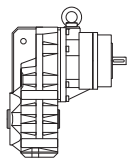

50 Hz			i	Type	F_{RN}	F_{RV}	permissible input speed [1/min]	
n_2	M_2	M_1					for mounting position	
(4 pole)	f_B=1,0						H1,H2,H3,H4,H5,B5,V1	H6,V3,V6
1/min	Nm	Nm			N	N	B3,B6,B7,B8,V5	
10	900	6,6	137	**BF40-..-SN**	10600		3600	1800
11	900	7,2	124,5	"	10200		"	"
13	900	8,1	111,1	"	9800		"	"
14	900	8,9	101	"	9400		"	"
15	900	10	92,31	"	9100		"	"
17	900	11	83,91	"	8700		"	"
18	900	11	78,55	"	8500		"	"
20	900	13	71,4	"	8100		"	"
21	900	13	67,38	"	8000		"	"
23	900	15	61,25	"	7600		"	"
26	900	17	53,82	"	7200		"	"
29	900	18	48,92	"	7000		"	"
31	900	20	45,56	"	6800		"	"
34	900	22	41,42	"	6500		"	"
37	890	24	37,64	"	6200		"	"
41	850	25	34,21	"	6000		"	"
47	800	27	29,55	"	5800		"	"
52	770	29	26,86	"	5600		"	"
59	730	31	23,77	"	5400		"	"
65	700	32	21,6	"	5200		"	"
73	660	35	19,09	"	5100		"	"
81	630	36	17,35	"	4950		"	"
93	520	35	15,02	"	4800		"	"
119	465	39	11,79	"	4450		"	"
148	415	44	9,48	"	4150		"	"
184	365	48	7,62	"	3900		"	"
239	335	57	5,87	"	3550		"	"

M = 497 .. 1300 Nm

50 Hz			i	Type	F_{RN}	F_{RV}	permissible input speed [1/min]	
n_2	M_2	M_1					for mounting position	
(4 pole)	f_B=1,0						H1,H2,H3,H4,H5,B5,V1	H6,V3,V6
1/min	Nm	Nm			N	N	B3,B6,B7,B8,V5	
11	1300	10	127,5	**BF50-..-SN**	13600		3600	1800
12	1300	11	114	"	12900		"	"
14	1300	13	100,9	"	12300		"	"
16	1300	14	90,24	"	11800		"	"
17	1300	16	81,33	"	11300		"	"
19	1300	18	72,72	"	10700		"	"
22	1300	20	63,59	"	9800		"	"
25	1300	23	56,86	"	9300		"	"
30	1300	28	47,14	"	8900		"	"
33	1300	31	42,15	"	8500		"	"
39	1300	37	35,49	"	7800		"	"
44	1260	40	31,73	"	7500		"	"
54	1160	45	25,88	"	7100		"	"
61	1100	48	23,14	"	6800		"	"
75	1000	54	18,68	"	6400		"	"
84	950	57	16,7	"	6200		"	"
96	790	54	14,65	"	6100		"	"
131	670	63	10,68	"	5600		"	"
182	560	73	7,71	"	5100		"	"
260	497	92	5,38	"	4500		"	"

M = 754 .. 2300 Nm

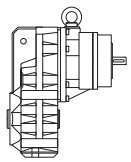

50 Hz			i	Type	F_{RN}	F_{RV}	permissible input speed [1/min]	
n_2	M_2	M_1					for mounting position	
(4 pole)	f_B=1,0						H1,H2,H3,H4,H5,B5,V1 B3,B6,B7,B8,V5	H6,V3,V6
1/min	Nm	Nm			N	N		
11	2300	18	125,5	**BF60-..-SN**	15300	43300	3600	1800
12	2300	20	113,1	"	14600	41300	"	"
14	2300	22	103,7	"	14100	39900	"	"
15	2300	25	93,44	"	13500	38200	"	"
17	2300	29	80,05	"	12600	35600	"	"
19	2300	32	72,15	"	12000	34000	"	"
23	2300	38	60,4	"	11100	31400	"	"
26	2300	42	54,44	"	10500	29700	"	"
30	2200	48	46,16	"	9900	28000	"	"
34	2100	50	41,6	"	9600	27100	"	"
40	1980	57	34,62	"	9100	25700	"	"
45	1890	61	31,2	"	8800	24900	"	"
56	1730	69	25,05	"	8200	23200	"	"
62	1650	73	22,58	"	8000	22600	"	"
74	1520	81	18,81	"	7600	21500	"	"
83	1440	85	16,96	"	7300	20600	"	"
98	1190	84	14,24	"	7100	20000	"	"
136	1010	98	10,31	"	6500	18400	"	"
181	860	111	7,74	"	6000	16900	"	"
268	754	144	5,22	"	5250	14800	"	"

M = 2500 .. 5200 Nm

50 Hz			i	Type	F_{RN}	F_{RV}	permissible input speed [1/min]	
n_2	M_2	M_1					for mounting position	
(4 pole)	f_B=1,0						H1,H2,H3,H4,H5,B5,V1 B3,B6,B7,B8,V5	H6,V3,V6
1/min	Nm	Nm			N	N		
11	5200	42	122,7	**BF70-..-SN**	16100	47700	1800	1800
13	5200	49	105,2	"	14700	45100	"	"
15	5200	54	95,46	"	14000	43700	"	"
17	5200	64	81,82	"	12800	41300	"	"
19	5200	72	72,26	"	12000	39600	"	"
23	5200	84	61,94	"	10800	37400	"	"
25	5200	93	55,79	"	10200	36000	"	"
29	5200	109	47,82	"	9100	34000	"	"
33	5200	121	43,02	"	8700	32800	"	"
38	5200	141	36,88	"	7900	31100	"	"
44	5200	163	31,84	"	7700	30000	"	"
51	5200	191	27,29	"	7000	28400	"	"
57	5000	204	24,55	"	7000	27700	"	"
67	4600	219	21,04	"	6400	26300	"	"
81	4250	244	17,39	"	6200	25000	"	"
94	3650	245	14,9	"	5900	24000	"	"
116	2900	241	12,04	"	4900	19700	"	"
136	2500	242	10,32	"	4600	18700	"	"

BF-series paralle shaft geared motors

Selection - parallel shaft geared motors with SN input

M = 3650 .. 9500 Nm

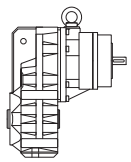

50 Hz			i	Type	F_{RN}	F_{RV}	permissible input speed [1/min]	
n_2	M_2	M_1					for mounting position	
(4 pole)	f_B=1,0						H1,H2,H3,H4,H5,B5,V1	H6,V3,V6
1/min	Nm	Nm			N	N	B3,B6,B7,B8,V5	
5,2	9500	35	269,1	**BF80-..-SN**	39600	75000	1800	1800
5,9	9500	40	237,1	"	36900	75000	"	"
6,7	9500	45	209,4	"	34300	75000	"	"
7,6	9500	51	184,5	"	31800	75000	"	"
8,8	9500	60	158,5	"	29000	75000	"	"
10	9500	68	139,7	"	26700	75000	"	"
11	9500	78	122,4	"	24500	75000	"	"
13	9500	88	107,9	"	22400	72300	"	"
15	9500	101	94,38	"	20300	68500	"	"
17	9500	114	83,16	"	18400	65100	"	"
20	9500	136	69,86	"	15900	60600	"	"
23	9300	151	61,55	"	14800	58100	"	"
26	8900	165	53,86	"	14000	55800	"	"
29	8600	181	47,46	"	13400	53700	"	"
37	8000	210	38,14	"	12200	50300	"	"
42	7700	229	33,61	"	11700	48400	"	"
46	7100	235	30,21	"	12300	47900	"	"
60	6300	271	23,29	"	11800	44900	"	"
85	5300	321	16,49	"	11400	41400	"	"
123	3650	320	11,42	"	8900	32200	"	"

M = 7200.. 16800 Nm

50 Hz			i	Type	F_{RN}	F_{RV}	permissible input speed [1/min]	
n_2	M_2	M_1					for mounting position	
(4 pole)	f_B=1,0						H1,H2,H3,H4,H5,B5,V1	H6,V3,V6
1/min	Nm	Nm			N	N	B3,B6,B7,B8,V5	
5,4	16800	65	259	**BF90-..-SN**	42800	120000	1800	1800
6	16800	72	232,6	"	39900	118300	"	"
7	16800	85	198,8	"	36000	111300	"	"
7,8	16800	94	178,6	"	33400	106700	"	"
9	16800	109	154,8	"	30100	100800	"	"
10	16800	121	139,1	"	27700	96300	"	"
12	16800	140	119,7	"	24500	90800	"	"
13	16800	156	107,5	"	22300	86900	"	"
16	16800	187	90,02	"	18900	80600	"	"
17	16500	204	80,85	"	17500	77500	"	"
20	15700	222	70,69	"	16800	74700	"	"
22	15400	243	63,49	"	15800	72000	"	"
27	14400	279	51,7	"	14600	67800	"	"
30	14000	302	46,43	"	13800	65500	"	"
37	13100	349	37,54	"	12700	61500	"	"
42	12800	380	33,71	"	11900	59300	"	"
58	11200	468	23,95	"	11100	54300	"	"
81	10100	581	17,39	"	10000	49500	"	"
112	7200	578	12,45	"	8000	39700	"	"

M = 62 .. 95 Nm

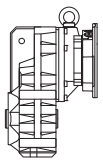

50 Hz		i	Type	F_{RN}	F_{RV}	max. permissible input torque M1 [Nm] *													
n_2	M_2					1	3	3	5	10	20	26	55	105	145	210	290	385	575
(4 pole)	f_B=1,0					IEC Motor Size *													
1/min	Nm			N	N	56	63	71	80	90	100	112	132	160	180	200	225	250	280
13	81	110,8	**BF06-..-C/IEC**	5000		■	■	■	■										
15	95	95,16	"	5000		■	■	■	■										
17	95	83,61	"	4600		■	■	■	■										
21	95	66,82	"	4300		■	■	■	■										
24	95	58,33	"	4000		■	■	■	■										
30	95	46,14	"	3800		■	■	■	■										
37	95	37,69	"	3500		■	■	■	■										
44	95	31,5	"	3200		■	■	■	■										
52	95	26,76	"	3000		■	■	■	■										
69	95	20,42	"	2700		■	■	■	■										
82	95	16,99	"	2500		■	■	■	■										
99	85	14,21	"	2100		■	■	■	■										
116	75	12,07	"	2000		■	■	■	■										
152	70	9,21	"	1900		■	■	■	■										
183	68	7,66	"	1800		■	■	■	■										
245	62	5,72	"	1600					■										

7

M = 138 .. 260 Nm

50 Hz		i	Type	F_{RN}	F_{RV}	max. permissible input torque M1 [Nm] *													
n_2	M_2					1	3	3	5	10	20	26	55	105	145	210	290	385	575
(4 pole)	f_B=1,0					IEC Motor Size *													
1/min	Nm			N	N	56	63	71	80	90	100	112	132	160	180	200	225	250	280
10	240	141,8	**BF10-..-C/IEC**	6400		■	■	■											
11	240	128,9	"	6200		■	■	■											
11	240	123,5	"	6100		■	■	■	■	■	■								
12	240	112,3	"	5900		■	■	■	■	■	■								
14	240	99,97	"	5600		■	■	■	■	■	■								
15	240	90,91	"	5400		■	■	■	■	■	■								
16	240	85,27	"	5300		■	■	■	■	■	■								
18	240	77,55	"	5100		■	■	■	■	■	■								
21	240	67,69	"	4900		■	■	■	■	■	■								
23	240	61,55	"	4700		■	■	■	■	■	■								
25	240	56,39	"	4550		■	■	■	■	■	■								
27	240	51,28	"	4400		■	■	■	■	■	■								
30	240	47,35	"	4250		■	■	■	■	■	■								
33	240	43,06	"	4100		■	■	■	■	■	■								
35	240	39,75	"	3950		■	■	■	■	■	■								
39	240	36,15	"	3800		■	■	■	■	■	■								
45	240	31,31	"	3600		■	■	■	■	■	■								
49	240	28,47	"	3450		■	■	■	■	■	■								
55	240	25,6	"	3350		■	■	■	■	■	■								
60	240	23,28	"	3200		■	■	■	■	■	■								
70	240	20,05	"	3000					■	■	■								
77	240	18,23	"	2900					■	■	■								
93	183	15,04	"	2800		■	■	■	■	■	■								
118	183	11,84	"	2500		■	■	■	■	■	■								
144	177	9,69	"	2350		■	■	■	■	■	■								
185	153	7,58	"	2200					■	■	■								
250	138	5,6	"	1950					■	■	■								
2,4	240	592,8	**BF10Z-..-C/IEC**	6400		■	■	■	■										
2,6	240	539,1	"	6400		■	■	■	■										
2,7	240	516,3	"	6400		■	■	■	■										
3	240	469,5	"	6400		■	■	■	■										
3,3	240	418	"	6400		■	■	■	■										
3,7	240	380,2	"	6400		■	■	■	■										
3,9	240	356,6	"	6400		■	■	■	■										
4,3	240	324,3	"	6400		■	■	■	■										
4,9	240	283,1	"	6400		■	■	■	■										

* acc. to DIN/EN 50347:2001
For speeds above 1500 1/min, refer to manufacturer

BF-series paralle shaft geared motors

Selection parallel shaft geared box with C-coupling

M = 138 .. 260 Nm

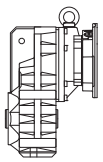

50 Hz		i	Type	F_{RN}	F_{RV}	max. permissible input torque M1 [Nm] *												
n_2	M_2					1	3	3	5	10	20	26	55	105	145	210	290	385	575
(4 pole)	f_B=1,0					IEC Motor Size *													
1/min	Nm			N	N	56	63	71	80	90	100	112	132	160	180	200	225	250	280
5,4	240	257,4	**BF10-..-C/IEC**	6400		■	■	■	■										
5,9	240	235,8	"	6400		■	■	■	■										
6,5	240	214,5	"	6400		■	■	■	■										
7,1	240	198	"	6400		■	■	■	■										
7,8	240	180,1	"	6400		■	■	■	■										
8,4	240	166,2	"	6400		■	■	■	■										
9,3	240	151,2	"	6400		■	■	■	■										
0,15	260	9471	**BF10G06-..-C/IEC**	6400		■	■	■											
0,16	260	8681	"	6400		■	■	■											
0,2	260	7144	"	6400		■	■	■	■										
0,21	260	6550	"	6400		■	■	■	■										
0,25	260	5709	"	6400		■	■	■	■										
0,31	260	4569	"	6400		■	■	■	■										
0,36	260	3942	"	6400		■	■	■	■										
0,43	260	3220	"	6400		■	■	■	■										
0,47	260	2952	"	6400		■	■	■	■										
0,6	260	2467	"	6400		■	■	■	■										
0,7	260	2096	"	6400		■	■	■	■										
0,8	260	1744	"	6400		■	■	■	■										
1	260	1452	"	6400		■	■	■	■										
1,2	260	1190	"	6400		■	■	■	■										
1,4	260	994	"	6400		■	■	■	■										
1,7	260	845,1	"	6400		■	■	■	■										
1,8	260	768,2	"	6400		■	■	■	■										
2,2	260	643,8	"	6400		■	■	■	■										
2,6	260	536	"	6400		■	■	■	■										
3,3	260	424,5	"	6400		■	■	■	■										
3,7	260	377,9	"	6400		■	■	■	■										
4,3	260	322,3	"	6400		■	■	■	■										

M = 200 .. 460 Nm

50 Hz		i	Type	F_{RN}	F_{RV}	max. permissible input torque M1 [Nm] *												
n_2	M_2					1	3	3	5	10	20	26	55	105	145	210	290	385	575
(4 pole)	f_B=1,0					IEC Motor Size *													
1/min	Nm			N	N	56	63	71	80	90	100	112	132	160	180	200	225	250	280
10	420	135,9	**BF20-..-C/IEC**	7900		■	■	■	■	■	■								
11	420	123,5	"	7600		■	■	■	■	■	■								
13	420	110,2	"	7300		■	■	■	■	■	■								
14	420	100,2	"	7000		■	■	■	■	■	■								
15	420	96,08	"	6900		■	■	■	■	■	■								
16	420	87,31	"	6600		■	■	■	■	■	■								
18	420	76,69	"	6300		■	■	■	■	■	■								
20	420	69,7	"	6100		■	■	■	■	■	■								
22	420	64,08	"	5900		■	■	■	■	■	■								
24	420	58,24	"	5600		■	■	■	■	■	■								
26	420	53,43	"	5500		■	■	■	■	■	■								
29	420	48,56	"	5200		■	■	■	■	■	■								
31	420	45,9	"	5100		■	■	■	■	■	■								
34	420	41,72	"	4950		■	■	■	■	■	■								
39	420	35,85	"	4650		■	■	■	■	■	■								
43	420	32,58	"	4450		■	■	■	■	■	■								
46	420	30,4	"	4400		■	■	■	■	■	■								
51	420	27,62	"	4150		■	■	■	■	■	■								
58	400	24,25	"	3950					■	■	■								
64	395	22,04	"	3800					■	■	■								
76	370	18,45	"	3600					■	■	■								
83	360	16,77	"	3500					■	■	■								
90	305	15,54	"	3450		■	■	■	■	■	■								
106	285	13,18	"	3300		■	■	■	■	■	■								

* acc. to DIN/EN 50347:2001
For speeds above 1500 1/min, refer to manufacturer

M = 200 .. 460 Nm

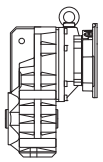

50 Hz		i	Type	F_{RN}	F_{RV}	max. permissible input torque M1 [Nm] *												
n_2	M_2					1	3	3	5	10	20	26	55	105	145	210	290	385	575
(4 pole)	f_B=1,0					IEC Motor Size *													
1/min	Nm			N	N	56	63	71	80	90	100	112	132	160	180	200	225	250	280
133	255	10,51	**BF20-..-C/IEC**	3100					■	■	■								
175	220	8	"	2850					■	■	■								
232	200	6,04	"	2550					■	■	■								
3	420	460	**BF20Z-..-C/IEC**	7900		■	■	■	■										
3,3	420	418,1	"	7900		■	■	■	■										
3,8	420	373,1	"	7900		■	■	■	■										
4,1	420	339,1	"	7900		■	■	■	■										
4,3	420	325,2	"	7900		■	■	■	■										
4,7	420	295,5	"	7900		■	■	■	■										
5,4	420	259,6	"	7900		■	■	■	■										
5,9	420	235,9	"	7900		■	■	■	■										
6,5	420	216,9	"	7900		■	■	■	■										
7,1	420	197,1	"	7900		■	■	■	■										
7,7	420	180,8	"	7900		■	■	■	■										
8,5	420	164,3	"	7900		■	■	■	■										
9	420	155,4	"	7900		■	■	■	■										
10	420	141,2	"	7900		■	■	■	■										
0,15	460	9077	**BF20G06-..-C/IEC**	7900		■	■	■											
0,17	460	8320	"	7900		■	■	■											
0,2	460	6847	"	7900		■	■	■	■										
0,26	460	5471	"	7900		■	■	■	■										
0,32	460	4379	"	7900		■	■	■	■										
0,37	460	3778	"	7900		■	■	■	■										
0,45	460	3086	"	7900		■	■	■	■										
0,49	460	2829	"	7900		■	■	■	■										
0,5	460	2579	"	7900		■	■	■	■										
0,6	460	2192	"	7900		■	■	■	■										
0,8	460	1764	"	7900		■	■	■	■										
0,9	460	1533	"	7900		■	■	■	■										
1	460	1392	"	7900		■	■	■	■										
1,2	460	1140	"	7900		■	■	■	■										
1,5	460	952,7	"	7900		■	■	■	■										
1,7	460	810	"	7900		■	■	■	■										
1,9	460	736,1	"	7900		■	■	■	■										
2,3	460	617	"	7900		■	■	■	■										
2,7	460	513,7	"	7900		■	■	■	■										

M = 570.. 630 Nm

50 Hz		i	Type	F_{RN}	F_{RV}	max. permissible input torque M1 [Nm] *												
n_2	M_2					1	3	3	5	10	20	26	55	105	145	210	290	385	575
(4 pole)	f_B=1,0					IEC Motor Size *													
1/min	Nm			N	N	56	63	71	80	90	100	112	132	160	180	200	225	250	280
10	570	137,1	**BF30-..-C/IEC**	7400		■	■	■	■	■	■								
11	570	124,7	"	7100		■	■	■	■	■	■								
12	570	118,3	"	7000		■	■	■	■	■	■								
13	570	107,6	"	6700		■	■	■	■	■	■								
15	570	95,79	"	6400		■	■	■	■	■	■								
16	570	87,08	"	6200		■	■	■	■	■	■								
18	570	79,34	"	5900		■	■	■	■	■	■								
19	570	72,13	"	5700		■	■	■	■	■	■								
21	570	67,28	"	5500		■	■	■	■	■	■								
23	570	61,17	"	5300		■	■	■	■	■	■								
24	570	57,41	"	5200		■	■	■	■	■	■								
27	570	52,2	"	5000		■	■	■	■	■	■								
31	570	45,1	"	4700		■	■	■	■	■	■	■							
34	570	41,01	"	4500		■	■	■	■	■	■	■							
36	570	38,49	"	4400		■	■	■	■	■	■	■							
40	570	35	"	4200		■	■	■	■	■	■	■							
45	570	31,05	"	4000					■	■	■	■							
50	570	28,23	"	3800					■	■	■	■							
58	550	24,03	"	3600					■	■	■	■							

* acc. to DIN/EN 50347:2001
For speeds above 1500 1/min, refer to manufacturer

BF-series paralle shaft geared motors

Selection parallel shaft geared box with C-coupling

M = 570 .. 630 Nm

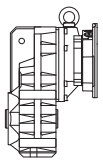

50 Hz		i	Type	F_{RN}	F_{RV}	max. permissible input torque M1 [Nm] *													
n_2	M_2					1	3	3	5	10	20	26	55	105	145	210	290	385	575
(4 pole)	f_B=1,0					IEC Motor Size *													
1/min	Nm			N	N	56	63	71	80	90	100	112	132	160	180	200	225	250	280
64	520	21,85	**BF30-..-C/IEC**	3500					■	■	■	■							
72	500	19,41	"	3400					■	■	■	■							
79	475	17,65	"	3300					■	■	■	■							
88	405	16	"	3250		■	■	■	■	■	■	■							
108	365	12,91	"	3050					■	■	■	■							
140	320	9,99	"	2850					■	■	■	■							
173	285	8,07	"	2650					■	■	■	■							
221	263	6,34	"	2400					■	■	■	■							
2,4	570	590,7	**BF30Z-..-C/IEC**	7400		■	■	■	■	■	■								
2,6	570	537	"	7400		■	■	■	■	■	■								
2,7	570	509,6	"	7400		■	■	■	■	■	■								
3	570	463,3	"	7400		■	■	■	■	■	■								
3,4	570	412,6	"	7400		■	■	■	■	■	■								
3,7	570	375,1	"	7400		■	■	■	■	■	■								
4,1	570	341,8	"	7400		■	■	■	■	■	■								
4,5	570	310,7	"	7400		■	■	■	■	■	■								
4,8	570	289,8	"	7400		■	■	■	■	■	■								
5,3	570	263,5	"	7400		■	■	■	■	■	■								
5,7	570	247,3	"	7400		■	■	■	■	■	■								
6,2	570	224,8	"	7400		■	■	■	■	■	■								
7,2	570	194,3	"	7400		■	■	■	■	■	■								
7,9	570	176,6	"	7400		■	■	■	■	■	■								
8,4	570	165,8	"	7400		■	■	■	■	■	■								
9,3	570	150,7	"	7400		■	■	■	■	■	■								
0,15	630	9157	**BF30G06-..-C/IEC**	7400		■	■	■											
0,18	630	7861	"	7400		■	■	■											
0,19	630	7206	"	7400		■	■	■											
0,22	630	6333	"	7400		■	■	■	■										
0,28	630	5060	"	7400		■	■	■	■										
0,32	630	4417	"	7400		■	■	■	■										
0,37	630	3811	"	7400		■	■	■	■										
0,4	630	3493	"	7400		■	■	■	■										
0,49	630	2854	"	7400		■	■	■	■										
0,6	630	2386	"	7400		■	■	■	■										
0,7	630	2026	"	7400		■	■	■	■										
0,8	630	1686	"	7400		■	■	■	■										
1	630	1404	"	7400		■	■	■	■										
1,1	630	1286	"	7400		■	■	■	■										
1,2	630	1150	"	7400		■	■	■	■										
1,5	630	961,1	"	7400		■	■	■	■										
1,7	630	817,1	"	7400		■	■	■	■										
2	630	705,1	"	7400		■	■	■	■										
2,2	630	622,4	"	7400		■	■	■	■										

M = 335 .. 1000 Nm

50 Hz		i	Type	F_{RN}	F_{RV}	max. permissible input torque M1 [Nm] *													
n_2	M_2					1	3	3	5	10	20	26	55	105	145	210	290	385	575
(4 pole)	f_B=1,0					IEC Motor Size *													
1/min	Nm			N	N	56	63	71	80	90	100	112	132	160	180	200	225	250	280
10	900	137	**BF40-..-C/IEC**	10600					■	■	■								
11	900	124,5	"	10200					■	■	■								
13	900	111,1	"	9800					■	■	■								
14	900	101	"	9400					■	■	■								
15	900	92,31	"	9100					■	■	■								
17	900	83,91	"	8700					■	■	■								
18	900	78,55	"	8500					■	■	■								
20	900	71,4	"	8100					■	■	■								
21	900	67,38	"	8000					■	■	■								
23	900	61,25	"	7600					■	■	■								

* acc. to DIN/EN 50347:2001
For speeds above 1500 1/min, refer to manufacturer

M = 335 .. 1000 Nm

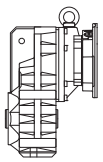

50 Hz		i	Type	F_{RN}	F_{RV}	max. permissible input torque M1 [Nm] *												
n_2	M_2					1	3	3	5	10	20	26	55	105	145	210	290	385	575
(4 pole)	f_B=1,0					IEC Motor Size *													
1/min	Nm			N	N	56	63	71	80	90	100	112	132	160	180	200	225	250	280
26	900	53,82	**BF40-..-C/IEC**	7200					■	■	■	■							
29	900	48,92	"	7000					■	■	■	■							
31	900	45,56	"	6800					■	■	■	■							
34	900	41,42	"	6500					■	■	■	■							
37	890	37,64	"	6200					■	■	■	■							
41	850	34,21	"	6000					■	■	■	■							
47	800	29,55	"	5800					■	■	■	■							
52	770	26,86	"	5600					■	■	■	■							
59	730	23,77	"	5400					■	■	■	■							
65	700	21,6	"	5200					■	■	■	■							
73	660	19,09	"	5100					■	■	■	■							
81	630	17,35	"	4950					■	■	■	■							
93	520	15,02	"	4800					■	■	■	■							
119	465	11,79	"	4450					■	■	■	■							
148	415	9,48	"	4150					■	■	■	■							
184	365	7,62	"	3900					■	■	■	■							
239	335	5,87	"	3550					■	■	■	■							
2,5	900	566,1	**BF40Z-..-C/IEC**	10600		■	■	■	■	■	■								
2,7	900	514,6	"	10600		■	■	■	■	■	■								
3	900	459,1	"	10600		■	■	■	■	■	■								
3,4	900	417,3	"	10600		■	■	■	■	■	■								
3,7	900	381,5	"	10600		■	■	■	■	■	■								
4	900	346,8	"	10600		■	■	■	■	■	■								
4,3	900	324,7	"	10600		■	■	■	■	■	■								
4,7	900	295,1	"	10600		■	■	■	■	■	■								
5	900	278,5	"	10600		■	■	■	■	■	■								
5,5	900	253,2	"	10600		■	■	■	■	■	■								
6,3	900	222,4	"	10600		■	■	■	■	■	■								
6,9	900	202,2	"	10600		■	■	■	■	■	■								
7,4	900	188,3	"	10600		■	■	■	■	■	■								
8,2	900	171,2	"	10600		■	■	■	■	■	■								
9	900	155,6	"	10600		■	■	■	■	■	■								
10	900	141,4	"	10600		■	■	■	■	■	■								
0,14	1000	10019	**BF40G10-..-C/IEC**	10600		■	■	■											
0,15	1000	9042	"	10600		■	■	■											
0,18	1000	7875	"	10600		■	■	■	■	■	■								
0,22	1000	6377	"	10600		■	■	■	■	■	■								
0,26	1000	5439	"	10600		■	■	■	■	■	■								
0,29	1000	4784	"	10600		■	■	■	■	■	■								
0,35	1000	3985	"	10600		■	■	■	■	■	■								
0,42	1000	3346	"	10600		■	■	■	■	■	■								
0,5	1000	2810	"	10600		■	■	■	■	■	■								
0,6	1000	2536	"	10600		■	■	■	■	■	■								
0,7	1000	1997	"	10600		■	■	■	■	■	■								
0,8	1000	1810	"	10600		■	■	■	■	■	■								
0,9	1000	1484	"	10600		■	■	■	■	■	■								
1,1	1000	1324	"	10600		■	■	■	■	■	■								
1,3	1000	1106	"	10600		■	■	■	■	■	■								
1,5	1000	928,9	"	10600		■	■	■	■	■	■								
1,9	1000	731,6	"	10600		■	■	■	■	■	■								
2,3	1000	597,3	"	10600		■	■	■	■	■	■								

* acc. to DIN/EN 50347:2001
For speeds above 1500 1/min, refer to manufacturer

BF-series paralle shaft geared motors

Selection parallel shaft geared box with C-coupling

M = 497 .. 1400 Nm

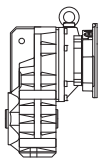

50 Hz		i	Type	F_{RN}	F_{RV}	max. permissible input torque M1 [Nm] *												
n_2	M_2					1	3	3	5	10	20	26	55	105	145	210	290	385	575
(4 pole)	f_B=1,0					IEC Motor Size *													
1/min	Nm			N	N	56	63	71	80	90	100	112	132	160	180	200	225	250	280
11	1300	127,5	**BF50-..-C/IEC**	13600					■	■	■								
12	1300	114	"	12900					■	■	■								
14	1300	100,9	"	12300					■	■	■	■	■	■					
16	1300	90,24	"	11800					■	■	■	■	■	■					
17	1300	81,33	"	11300					■	■	■	■	■	■					
19	1300	72,72	"	10700					■	■	■	■	■	■					
22	1300	63,59	"	9800					■	■	■	■	■	■					
25	1300	56,86	"	9300					■	■	■	■	■	■					
30	1300	47,14	"	8900					■	■	■	■	■	■					
33	1300	42,15	"	8500					■	■	■	■	■	■					
39	1300	35,49	"	7800					■	■	■	■	■	■					
44	1260	31,73	"	7500					■	■	■	■	■	■					
54	1160	25,88	"	7100					■	■	■	■	■	■					
61	1100	23,14	"	6800					■	■	■	■	■	■					
75	1000	18,68	"	6400								■	■	■					
84	950	16,7	"	6200								■	■	■					
96	790	14,65	"	6100					■	■	■	■	■	■					
131	670	10,68	"	5600					■	■	■	■	■	■					
182	560	7,71	"	5100								■	■	■					
260	497	5,38	"	4500								■	■	■					
2,5	1300	555,2	**BF50Z-..-C/IEC**	13600		■	■	■	■	■	■								
2,8	1300	496,4	"	13600		■	■	■	■	■	■								
3,2	1300	439,3	"	13600		■	■	■	■	■	■								
3,6	1300	392,8	"	13600		■	■	■	■	■	■								
4	1300	354	"	13600		■	■	■	■	■	■								
4,4	1300	316,6	"	13600		■	■	■	■	■	■								
5,1	1300	276,8	"	13600		■	■	■	■	■	■								
5,7	1300	247,5	"	13600		■	■	■	■	■	■								
6,8	1300	205,2	"	13600		■	■	■	■	■	■								
7,6	1300	183,5	"	13600		■	■	■	■	■	■								
9,1	1300	154,5	"	13600		■	■	■	■	■	■								
10	1300	138,1	"	13600		■	■	■	■	■	■								
0,15	1400	9324	**BF50G10-..-C/IEC**	13600		■	■	■											
0,17	1400	8120	"	13600		■	■	■	■	■	■								
0,19	1400	7329	"	13600		■	■	■	■	■	■								
0,24	1400	5935	"	13600		■	■	■	■	■	■								
0,28	1400	5062	"	13600		■	■	■	■	■	■								
0,35	1400	4019	"	13600		■	■	■	■	■	■								
0,42	1400	3348	"	13600		■	■	■	■	■	■								
0,5	1400	2810	"	13600		■	■	■	■	■	■								
0,6	1400	2360	"	13600		■	■	■	■	■	■								
0,7	1400	2059	"	13600		■	■	■	■	■	■								
0,8	1400	1684	"	13600		■	■	■	■	■	■								
0,9	1400	1520	"	13600		■	■	■	■	■	■								
1	1400	1359	"	13600		■	■	■	■	■	■								
1,2	1400	1203	"	13600		■	■	■	■	■	■								
1,4	1400	1029	"	13600		■	■	■	■	■	■								
1,6	1400	864,5	"	13600		■	■	■	■	■	■								
2,1	1400	680,9	"	13600		■	■	■	■	■	■								
2,5	1400	555,9	"	13600		■	■	■	■	■	■								

7

* acc. to DIN/EN 50347:2001
For speeds above 1500 1/min, refer to manufacturer

M = 754 .. 2500 Nm

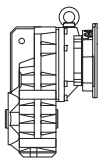

50 Hz		i	Type	F_{RN}	F_{RV}	max. permissible input torque M1 [Nm] *													
n_2	M_2					1	3	3	5	10	20	26	55	105	145	210	290	385	575
(4 pole)	f_B=1,0					IEC Motor Size *													
1/min	Nm			N	N	56	63	71	80	90	100	112	132	160	180	200	225	250	280
11	2300	125,5	**BF60-..-C/IEC**	15300	43300					■	■	■	■	■					
12	2300	113,1	"	14600	41300					■	■	■	■	■					
14	2300	103,7	"	14100	39900					■	■	■	■	■					
15	2300	93,44	"	13500	38200					■	■	■	■	■					
17	2300	80,05	"	12600	35600					■	■	■	■	■					
19	2300	72,15	"	12000	34000					■	■	■	■	■					
23	2300	60,4	"	11100	31400					■	■	■	■	■					
26	2300	54,44	"	10500	29700					■	■	■	■	■					
30	2200	46,16	"	9900	28000					■	■	■	■	■					
34	2100	41,6	"	9600	27100					■	■	■	■	■					
40	1980	34,62	"	9100	25700					■	■	■	■	■					
45	1890	31,2	"	8800	24900					■	■	■	■	■					
56	1730	25,05	"	8200	23200							■	■	■					
62	1650	22,58	"	8000	22600							■	■	■					
74	1520	18,81	"	7600	21500							■	■	■					
83	1440	16,96	"	7300	20600							■	■	■					
98	1190	14,24	"	7100	20000					■	■	■	■	■					
136	1010	10,31	"	6500	18400							■	■	■					
181	860	7,74	"	6000	16900							■	■	■					
268	754	5,22	"	5250	14800							■	■	■					
2,7	2300	510,3	**BF60Z-..-C/IEC**	15300	43300				■	■	■	■							
3	2300	459,9	"	15300	43300				■	■	■	■							
3,3	2300	421,6	"	15300	43300				■	■	■	■							
3,7	2300	380	"	15300	43300				■	■	■	■							
4,3	2300	325,6	"	15300	43300				■	■	■	■							
4,8	2300	293,4	"	15300	43300				■	■	■	■							
5,7	2300	245,6	"	15300	43300				■	■	■	■							
6,3	2300	221,4	"	15300	43300				■	■	■	■							
7,5	2300	187,7	"	15300	43300				■	■	■	■							
8,3	2300	169,2	"	15300	43300				■	■	■	■							
10	2300	140,8	"	15300	43300				■	■	■	■							
0,17	2500	8235	**BF60G20-..-C/IEC**	15300	43300	■	■	■	■	■	■								
0,21	2500	6679	"	15300	43300	■	■	■	■	■	■								
0,23	2500	6014	"	15300	43300	■	■	■	■	■	■								
0,27	2500	5241	"	15300	43300	■	■	■	■	■	■								
0,3	2500	4646	"	15300	43300	■	■	■	■	■	■								
0,36	2500	3883	"	15300	43300	■	■	■	■	■	■								
0,43	2500	3237	"	15300	43300	■	■	■	■	■	■								
0,5	2500	2781	"	15300	43300	■	■	■	■	■	■								
0,6	2500	2172	"	15300	43300	■	■	■	■	■	■								
0,7	2500	1955	"	15300	43300	■	■	■	■	■	■								
0,8	2500	1658	"	15300	43300	■	■	■	■	■	■								
0,9	2500	1494	"	15300	43300	■	■	■	■	■	■								
1,2	2500	1211	"	15300	43300	■	■	■	■	■	■								
1,5	2500	937,6	"	15300	43300	■	■	■	■	■	■								
1,7	2500	813,2	"	15300	43300	■	■	■	■	■	■								
2	2500	689	"	15300	43300	■	■	■	■	■	■								
2,5	2500	569,3	"	15300	43300	■	■	■	■	■	■								

M = 2500 .. 5700 Nm

50 Hz		i	Type	F_{RN}	F_{RV}	max. permissible input torque M1 [Nm] *													
n_2	M_2					1	3	3	5	10	20	26	55	105	145	210	290	385	575
(4 pole)	f_B=1,0					IEC Motor Size *													
1/min	Nm			N	N	56	63	71	80	90	100	112	132	160	180	200	225	250	280
11	5200	122,7	**BF70-..-C/IEC**	16100	47700					■	■	■	■	■					
13	5200	105,2	"	14700	45100					■	■	■	■	■					
15	5200	95,46	"	14000	43700					■	■	■	■	■					
17	5200	81,82	"	12800	41300					■	■	■	■	■					
19	5200	72,26	"	12000	39600					■	■	■	■	■	■	■	■	■	■
23	5200	61,94	"	10800	37400					■	■	■	■	■	■	■	■	■	■
25	5200	55,79	"	10200	36000					■	■	■	■	■	■	■	■	■	■
29	5200	47,82	"	9100	34000					■	■	■	■	■	■	■	■	■	■

* acc. to DIN/EN 50347:2001
For speeds above 1500 1/min, refer to manufacturer

BF-series paralle shaft geared motors

Selection parallel shaft geared box with C-coupling

M = 2500 .. 5700 Nm

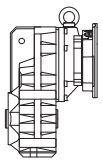

50 Hz		i	Type	F_{RN}	F_{RV}	max. permissible input torque M1 [Nm] *													
n_2	M_2					1	3	3	5	10	20	26	55	105	145	210	290	385	575
(4 pole)	f_B=1,0					IEC Motor Size *													
1/min	Nm			N	N	56	63	71	80	90	100	112	132	160	180	200	225	250	280
33	5200	43,02	**BF70-..-C/IEC**	8700	32800					■	■	■	■	■	■	■	■	■	■
38	5200	36,88	"	7900	31100					■	■	■	■	■	■	■	■	■	■
44	5200	31,84	"	7700	30000							■	■	■	■	■	■	■	■
51	5200	27,29	"	7000	28400							■	■	■	■	■	■	■	■
57	5000	24,55	"	7000	27700							■	■	■	■	■	■	■	■
67	4600	21,04	"	6400	26300							■	■	■	■	■	■	■	■
81	4250	17,39	"	6200	25000							■	■	■	■	■	■	■	■
94	3650	14,9	"	5900	24000							■	■	■	■	■	■	■	■
116	2900	12,04	"	4900	19700										■	■	■	■	■
136	2500	10,32	"	4600	18700										■	■	■	■	■
2,7	5200	512,4	**BF70Z-..-C/IEC**	16100	47700				■	■	■	■	■						
3,2	5200	439,2	"	16100	47700				■	■	■	■	■						
3,5	5200	398,7	"	16100	47700				■	■	■	■	■						
4,1	5200	341,7	"	16100	47700				■	■	■	■	■						
4,6	5200	301,8	"	16100	47700				■	■	■	■	■						
5,4	5200	258,7	"	16100	47700				■	■	■	■	■						
6	5200	233	"	16100	47700				■	■	■	■	■						
7	5200	199,7	"	16100	47700				■	■	■	■	■						
7,8	5200	179,7	"	16100	47700				■	■	■	■	■						
9,1	5200	154	"	16100	47700				■	■	■	■	■						
11	5200	133	"	16100	47700				■	■	■	■	■						
0,17	5700	8052	**BF70G20-..-C/IEC**	16100	47700	■	■	■	■	■	■								
0,19	5700	7248	"	16100	47700	■	■	■	■	■	■								
0,21	5700	6530	"	16100	47700	■	■	■	■	■	■								
0,25	5700	5691	"	16100	47700	■	■	■	■	■	■								
0,27	5700	5124	"	16100	47700	■	■	■	■	■	■								
0,31	5700	4542	"	16100	47700	■	■	■	■	■	■								
0,34	5700	4090	"	16100	47700	■	■	■	■	■	■								
0,41	5700	3417	"	16100	47700	■	■	■	■	■	■								
0,49	5700	2849	"	16100	47700	■	■	■	■	■	■								
0,6	5700	2448	"	16100	47700	■	■	■	■	■	■								
0,7	5700	1912	"	16100	47700	■	■	■	■	■	■								
0,9	5700	1621	"	16100	47700	■	■	■	■	■	■								
1	5700	1390	"	16100	47700	■	■	■	■	■	■								
1,4	5700	1017	"	16100	47700	■	■	■	■	■	■								
1,6	5700	872,1	"	16100	47700	■	■	■	■	■	■								
2,1	5700	673,6	"	16100	47700	■	■	■	■	■	■								
2,4	5700	577,5	"	16100	47700	■	■	■	■	■	■								
2,7	5700	524,1	"	16100	47700	■	■	■	■	■	■								

M = 3650 .. 10500 Nm

50 Hz		i	Type	F_{RN}	F_{RV}	max. permissible input torque M1 [Nm] *													
n_2	M_2					1	3	3	5	10	20	26	55	105	145	210	290	385	575
(4 pole)	f_B=1,0					IEC Motor Size *													
1/min	Nm			N	N	56	63	71	80	90	100	112	132	160	180	200	225	250	280
5,2	9500	269,1	**BF80-..-C/IEC**	39600	75000					■	■	■	■	■					
5,9	9500	237,1	"	36900	75000					■	■	■	■	■					
6,7	9500	209,4	"	34300	75000					■	■	■	■	■					
7,6	9500	184,5	"	31800	75000					■	■	■	■	■					
8,8	9500	158,5	"	29000	75000					■	■	■	■	■	■	■	■	■	■
10	9500	139,7	"	26700	75000					■	■	■	■	■	■	■	■	■	■
11	9500	122,4	"	24500	75000					■	■	■	■	■	■	■	■	■	■
13	9500	107,9	"	22400	72300					■	■	■	■	■	■	■	■	■	■
15	9500	94,38	"	20300	68500					■	■	■	■	■	■	■	■	■	■
17	9500	83,16	"	18400	65100					■	■	■	■	■	■	■	■	■	■
20	9500	69,86	"	15900	60600							■	■	■	■	■	■	■	■
23	9300	61,55	"	14800	58100							■	■	■	■	■	■	■	■
26	8900	53,86	"	14000	55800							■	■	■	■	■	■	■	■
29	8600	47,46	"	13400	53700							■	■	■	■	■	■	■	■
37	8000	38,14	"	12200	50300							■	■	■	■	■	■	■	■
42	7700	33,61	"	11700	48400							■	■	■	■	■	■	■	■

* acc. to DIN/EN 50347:2001
For speeds above 1500 1/min, refer to manufacturer

M = 3650 .. 10500 Nm

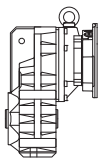

50 Hz		i	Type	F_{RN}	F_{RV}	max. permissible input torque M1 [Nm] *												
n_2	M_2					1	3	3	5	10	20	26	55	105	145	210	290	385	575
(4 pole)	f_B=1,0					IEC Motor Size *													
1/min	Nm			N	N	56	63	71	80	90	100	112	132	160	180	200	225	250	280
46	7100	30,21	**BF80-..-C/IEC**	12300	47900							■	■	■	■	■	■	■	■
60	6300	23,29	"	11800	44900							■	■	■	■	■	■	■	■
85	5300	16,49	"	11400	41400							■	■	■	■	■	■	■	■
123	3650	11,42	"	8900	32200										■	■	■	■	■
1,2	10500	1124	**BF80Z-..-C/IEC**	39600	75000				■	■	■	■	■						
1,4	10500	990,4	"	39600	75000				■	■	■	■	■						
1,6	10500	874,6	"	39600	75000				■	■	■	■	■						
1,8	10500	770,6	"	39600	75000				■	■	■	■	■						
2,1	10500	662,1	"	39600	75000				■	■	■	■	■						
2,4	10500	583,4	"	39600	75000				■	■	■	■	■						
2,7	10500	511,2	"	39600	75000				■	■	■	■	■						
3,1	10500	450,4	"	39600	75000				■	■	■	■	■						
3,6	10500	394,2	"	39600	75000				■	■	■	■	■						
4	10500	347,3	"	39600	75000				■	■	■	■	■						
4,8	10500	291,7	"	39600	75000				■	■	■	■	■						
0,08	10500	17814	**BF80G40-..-C/IEC**	39600	75000				■	■	■								
0,09	10500	16049	"	39600	75000				■	■	■								
0,1	10500	14448	"	39600	75000				■	■	■								
0,12	10500	12007	"	39600	75000				■	■	■								
0,14	10500	10215	"	39600	75000				■	■	■								
0,16	10500	8765	"	39600	75000				■	■	■								
0,18	10500	7895	"	39600	75000				■	■	■								
0,2	10500	6999	"	39600	75000				■	■	■	■							
0,24	10500	5926	"	39600	75000				■	■	■	■							
0,29	10500	4895	"	39600	75000				■	■	■	■							
0,32	10500	4411	"	39600	75000				■	■	■	■							
0,36	10500	3843	"	39600	75000				■	■	■	■							
0,4	10500	3461	"	39600	75000				■	■	■	■							
0,45	10500	3092	"	39600	75000				■	■	■	■							
0,5	10500	2785	"	39600	75000				■	■	■	■							
0,6	10500	2422	"	39600	75000				■	■	■	■							
0,7	10500	2051	"	39600	75000				■	■	■	■							
0,8	10500	1693	"	39600	75000				■	■	■	■							
0,9	10500	1491	"	39600	75000				■	■	■	■							
1,1	10500	1329	"	39600	75000				■	■	■	■							

M = 7200 .. 18500 Nm

50 Hz		i	Type	F_{RN}	F_{RV}	max. permissible input torque M1 [Nm] *												
n_2	M_2					1	3	3	5	10	20	26	55	105	145	210	290	385	575
(4 pole)	f_B=1,0					IEC Motor Size *													
1/min	Nm			N	N	56	63	71	80	90	100	112	132	160	180	200	225	250	280
5,4	16800	259	**BF90-..-C/IEC**	42800	120000							■	■	■					
6	16800	232,6	"	39900	118300							■	■	■					
7	16800	198,8	"	36000	111300							■	■	■	■	■	■	■	■
7,8	16800	178,6	"	33400	106700							■	■	■	■	■	■	■	■
9	16800	154,8	"	30100	100800							■	■	■	■	■	■	■	■
10	16800	139,1	"	27700	96300							■	■	■	■	■	■	■	■
12	16800	119,7	"	24500	90800							■	■	■	■	■	■	■	■
13	16800	107,5	"	22300	86900							■	■	■	■	■	■	■	■
16	16800	90,02	"	18900	80600							■	■	■	■	■	■	■	■
17	16500	80,85	"	17500	77500							■	■	■	■	■	■	■	■
20	15700	70,69	"	16800	74700							■	■	■	■	■	■	■	■
22	15400	63,49	"	15800	72000							■	■	■	■	■	■	■	■
27	14400	51,7	"	14600	67800							■	■	■	■	■	■	■	■
30	14000	46,43	"	13800	65500							■	■	■	■	■	■	■	■
37	13100	37,54	"	12700	61500										■	■	■	■	■
42	12800	33,71	"	11900	59300										■	■	■	■	■
58	11200	23,95	"	11100	54300							■	■	■	■	■	■	■	■
81	10100	17,39	"	10000	49500										■	■	■	■	■
112	7200	12,45	"	8000	39700										■	■	■	■	■

* acc. to DIN/EN 50347:2001
For speeds above 1500 1/min, refer to manufacturer

BF-series paralle shaft geared motors

Selection parallel shaft geared box with C-coupling

M = 7200 .. 18500 Nm

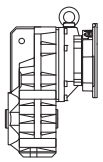

50 Hz		i	Type	F_{RN}	F_{RV}	max. permissible input torque M1 [Nm] *												
n_2	M_2					1	3	3	5	10	20	26	55	105	145	210	290	385	575
(4 pole)	f_B=1,0					IEC Motor Size *													
1/min	Nm			N	N	56	63	71	80	90	100	112	132	160	180	200	225	250	280
1,7	18500	845,1	**BF90Z-..-C/IEC**	42800	120000					■	■	■	■	■					
1,8	18500	759	"	42800	120000					■	■	■	■	■					
2,1	18500	658,1	"	42800	120000					■	■	■	■	■					
2,4	18500	591,1	"	42800	120000					■	■	■	■	■					
2,8	18500	508,5	"	42800	120000					■	■	■	■	■					
3,1	18500	456,7	"	42800	120000					■	■	■	■	■					
3,7	18500	382,6	"	42800	120000					■	■	■	■	■					
4,1	18500	343,6	"	42800	120000					■	■	■	■	■					
4,7	18500	300,4	"	42800	120000					■	■	■	■	■					
5,2	18500	269,8	"	42800	120000					■	■	■	■	■					
0,11	18500	13093	**BF90G50-..-C/IEC**	42800	120000				■	■	■								
0,12	18500	11813	"	42800	120000				■	■	■								
0,15	18500	9348	"	42800	120000				■	■	■	■	■	■					
0,17	18500	8350	"	42800	120000				■	■	■	■	■	■					
0,19	18500	7533	"	42800	120000				■	■	■	■	■	■					
0,21	18500	6529	"	42800	120000				■	■	■	■	■	■					
0,24	18500	5888	"	42800	120000				■	■	■	■	■	■					
0,29	18500	4839	"	42800	120000				■	■	■	■	■	■					
0,32	18500	4366	"	42800	120000				■	■	■	■	■	■					
0,38	18500	3644	"	42800	120000				■	■	■	■	■	■					
0,43	18500	3286	"	42800	120000				■	■	■	■	■	■					
0,47	18500	2952	"	42800	120000				■	■	■	■	■	■					
0,5	18500	2656	"	42800	120000				■	■	■	■	■	■					
0,6	18500	2154	"	42800	120000				■	■	■	■	■	■					
0,7	18500	1867	"	42800	120000				■	■	■	■	■	■					
0,8	18500	1678	"	42800	120000				■	■	■	■	■	■					
1	18500	1444	"	42800	120000				■	■	■	■	■	■					
1,2	18500	1204	"	42800	120000				■	■	■	■	■	■					
1,3	18500	1043	"	42800	120000				■	■	■	■	■	■					
1,4	18500	976,1	"	42800	120000				■	■	■	■	■	■					

* acc. to DIN/EN 50347:2001
For speeds above 1500 1/min, refer to manufacturer

8

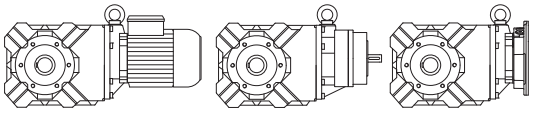

Page

BK-series bevel-geared motors 281-354
Selection

Description of bevel-geared units
- Sizes
- Bauer service factors (f_B) for bevel-geared motors
- Continuous operation without switching frequency Z ≤1/h
- Switching duty
- Bauer service factor
- Explanation of shock classification
- Key to abbreviations
- Selection tables, bevel-geared motors

Selection - bevel geared motors IE1
Selection - bevel geared motors IE2
Selection - bevel gearbox with SN input
Selection - bevel gearbox with C-coupling

Sizes

Bauer BK-series bevel-geared motors are normally supplied in ten frame sizes and with torques of 80 to 18,500 Nm. Higher torques are available on request. The gear unit is accommodated in a sturdy cast housing

Bauer service factors (f_B) for bevel-geared motors

Of the numerous factors influencing the total loading of a gear unit, the most important include:

- Mean torque (rated torque)
- Daily operating hours
- Severity of torque peaks (shock classification)
- Frequency of torque peaks (switching duty)

These factors can be represented in a simplified and practical manner by **service factors**. The tables and explanations below attempt to provide an objective description of the **shock classification**, rather than a classification of the driven machinery. Experience has shown that, in addition to the torque shocks caused by the driven machinery (M_x/M_N), above all the power transmission components (clutches, chains etc.) plus the mass ratios play a decisive role in this.

See Bauer special imprint SD32 for more information.

Continuous operation without switching frequency Z ≤1/h

Factor f_1 for shock classification and operating time

Shock classification	Operating hours per day t_d	>4 h	>8 h	>16 h
		≤8 h	≤16 h	≤24 h
I		0,8	1,0	1,2
II		1,05	1,25	1,45
III		1,45	1,55	1,7

Switching duty

Factor f_2 for shock classification and switching frequency

Switching frequency in single- shift operation t_d ≤8 h/d

Shock classification	1 <Z ≤100	100 <Z ≤1000	1000 <Z
I	0,95	1,1	1,15
II	1,2	1,35	1,4
III	1,55	1,6	1,6

Switching frequency in multiple- shift operation t_d >8 h/d

Shock classification	1 <Z ≤100	100 <Z ≤1000	1000 <Z
I	1,3	1,45	1,5
II	1,5	1,6	1,65
III	1,75	1,8	1,8

Bauer Service factor

Bauer service factor $f_B = f_1$ or $f_B = f_2$
For example: Shock classification II for Z = 100 switching operations per hour and multiple-shift operation yields a service factor $f_B = f_2 = 1,5$

Explanation of shock classification

Shock classification I:
Uniform without shock loads. All the following requirements must be satisfied:
- FI ≤1,3

- $M_x/M_N \leq 1,0$
- Shock-absorbing power transmission components (e.g. highly resilient, zero-play coupling, φ N ≥5°)

Shock classification II:
Moderate shock loads. At least one of the following conditions applies:
- 1,3 <FI ≤4
- 1 <M_x/M_N ≤1,6
- Shock-neutral power transmission components (e.g. gear wheels, zero- playrigid coupling or resilient coupling with φ N <5°)

Shock classification III:
Heavy shock loads. At least one of the following conditions applies:
- FI >4
- 1,6 <M_x/M_N ≤2,0
- Shock-amplifying power transmission components (e.g. coupling with play or chain drive)

Key to abbreviations

Z	Switching duty number of switching operations per hour
t_d	Daily operating time in hours (h/d)
FI	Factor of inertia FI = $(J_{ext} + J_{rot})/J_{rot}$
J_{ext}	Mass moment of inertia of the machine to be driven, in relation to the motor's rotor shaft (kgm²)
J_{rot}	Mass moment of inertia of the motor rotor (kgm²)
M_x	Highest impact torque above the static torque which can occur during normal operation or in emergency situations
M_N	Required static load torque for the application
M_x/M_N	Relative torque - Factor
φ_N	Torsional offset of the resilient coupling under rated torque

8

Selection tables, bevel-geared motors

Key to abbreviations

P	Rated output
n_2	Rated speed of the output shaft
i	Gear reduction ratio
M_2	Rated torque at the output shaft
f_B	Bauer service factor
F_{RN}	Maximum permissible radial force with normal bearings
F_{RV}	Maximum permissible radial force with reinforced bearings in each case with standard solid shaft (Code -.1 and -.2)

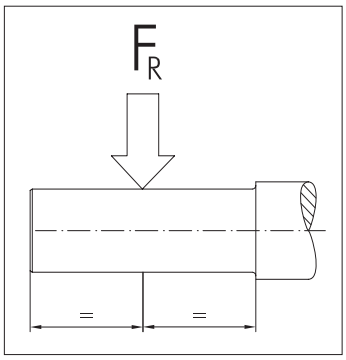

Use the selection tables to determine the size of geared motor required. The codes clearly define the Type of gear unit and output shaft (see chapter 12 "dimensional drawing bevel-geared motors").

The torques marked (*) are maximum permissible torques for service factor f_B = 1,0.

Motor power overload protection
Motor-power ratings, particularly in conjunction with four-stage and multi-stage gear units, are more than ample in some instances. Consequently, and in much the same way as with low-power motors, rated current is not a measure of gear loading and cannot be used to protect the gear unit against overloading. It is advisable to provide gears at risk from excessive load or blockage with a protective mechanism (e. g., slip clutch, slip hub, shear pin or an alternative)

P = 0.03 kW

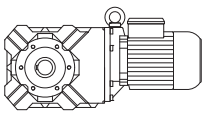

50 Hz			i	Type	m	F_{RN}	F_{RV}	60 Hz		
n_2	M_2	f_B						n_2	M_2	f_B
1/min	Nm				kg	N	N	1/min	Nm	
28.5	**8.9**	**9.0**	47.78	**BK06-../D04LA4**	7.6	1500	-	34	7.4	11
25	**10.1**	**6.7**	54.38	"	"	1600	-	30	8.4	8.1
21.5	**11.8**	**5.4**	63.33	"	"	1700	-	26	9.8	6.5
3.7	**62**	**2.7**	373.4	**BK10Z-../D04LA4**	21	7000	-	4.4	52	3.2
3.2	**71**	**2.1**	428.8	"	"	7000	-	3.8	60	2.5
2.5	**66**	**3.3**	552.3	**BK10G06-../D04LA4**	25	7000	-	3.0	51	4.3
2.2	**77**	**2.9**	635.5	"	"	7000	-	2.6	62	3.5
1.8	**98**	**2.2**	789.7	"	"	7000	-	2.1	80	2.8
1.5	**118**	**1.85**	929.3	"	"	7000	-	1.8	94	2.3
1.3	**139**	**1.6**	1112	"	"	7000	-	1.5	116	1.9
1.0	**184**	**1.2**	1361	"	"	7000	-	1.2	149	1.5
0.9	**205**	**1.05**	1577	"	"	7000	-	1.1	167	1.3
0.7	**220***	**1.0**	1971	"	"	7000	-	0.85	220	1.0
0.6	**220***	**1.0**	2261	"	"	7000	-	0.75	220	1.0
0.55	**220***	**1.0**	2467	"	"	7000	-	0.7	220	1.0
0.48	**220***	**1.0**	2849	"	"	7000	-	0.6	220	1.0
0.44	**220***	**1.0**	3107	"	"	7000	-	0.55	220	1.0
0.39	**220***	**1.0**	3537	"	"	7000	-	0.46	220	1.0
0.33	**220***	**1.0**	4120	"	"	7000	-	0.4	220	1.0
1.6	**110**	**3.3**	891.2	**BK20G06-../D04LA4**	34	8700	9000	1.9	88	4.1
1.3	**138**	**2.6**	1066	"	"	8700	9000	1.6	108	3.3
1.1	**165**	**2.2**	1305	"	"	8700	9000	1.3	135	2.7
0.95	**193**	**1.85**	1424	"	"	8700	9000	1.2	149	2.4
0.85	**220**	**1.65**	1650	"	"	8700	9000	1.0	183	1.95
0.7	**270**	**1.35**	2062	"	"	8700	9000	0.8	235	1.55
0.6	**320**	**1.15**	2366	"	"	8700	9000	0.7	270	1.35
0.55	**350**	**1.05**	2580	"	"	8700	9000	0.65	295	1.2
0.48	**360***	**1.0**	2831	"	"	8700	9000	0.6	360	1.0
0.44	**360***	**1.0**	3088	"	"	8700	9000	0.55	360	1.0
0.39	**360***	**1.0**	3515	"	"	8700	9000	0.47	360	1.0
0.33	**360***	**1.0**	4094	"	"	8700	9000	0.4	360	1.0
1.2	**150**	**3.3**	1142	**BK30G06-../D04LA4**	40	11200	12000	1.5	116	4.2
1.1	**165**	**3.0**	1281	"	"	11200	12000	1.3	135	3.6
0.85	**220**	**2.2**	1620	"	"	11200	12000	1.0	183	2.7
0.8	**235**	**2.1**	1767	"	"	11200	12000	0.95	195	2.5
0.7	**270**	**1.8**	2024	"	"	11200	12000	0.85	220	2.2
0.55	**350**	**1.4**	2533	"	"	11200	12000	0.65	295	1.65
0.5	**380**	**1.3**	2738	"	"	11200	12000	0.6	315	1.55
0.46	**415**	**1.2**	2986	"	"	11200	12000	0.55	345	1.4
0.4	**480**	**1.0**	3399	"	"	11200	12000	0.48	400	1.25
0.35	**490***	**1.0**	3959	"	"	11200	12000	0.41	490	1.0

P = 0.04 kW

50 Hz			i	Type	m	F_{RN}	F_{RV}	60 Hz		
n_2	M_2	f_B						n_2	M_2	f_B
1/min	Nm				kg	N	N	1/min	Nm	
41	**8.3**	**9.6**	33.33	**BK06-../D04LA4**	7.6	1320	-	49	7.0	11
35.5	**9.6**	**8.3**	38.18	"	"	1380	-	42.5	8.0	10
28.5	**11.9**	**6.7**	47.78	"	"	1500	-	34	9.9	8.1
25	**13.5**	**5.0**	54.38	"	"	1600	-	30	11.3	6.0
21.5	**15.8**	**4.0**	63.33	"	"	1700	-	26	13	4.9
4.5	**68**	**2.7**	302.4	**BK10Z-../D04LA4**	21	7000	-	5.4	57	3.2
3.7	**83**	**2.0**	373.4	"	"	7000	-	4.4	70	2.4
3.2	**95**	**1.55**	428.8	"	"	7000	-	3.8	80	1.85
3.0	**78**	**2.8**	459.2	**BK10G06-../D04LA4**	25	7000	-	3.6	62	3.5
2.7	**88**	**2.5**	501.4	"	"	7000	-	3.3	68	3.2
2.5	**96**	**2.3**	552.3	"	"	7000	-	3.0	77	2.9
2.2	**112**	**1.95**	635.5	"	"	7000	-	2.6	91	2.4
1.8	**140**	**1.55**	789.7	"	"	7000	-	2.1	116	1.9
1.5	**167**	**1.3**	929.3	"	"	7000	-	1.8	135	1.65

P = 0.04 kW

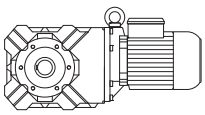

50 Hz			i	Type	m	F_{RN}	F_{RV}	60 Hz		
n_2	M_2	f_B						n_2	M_2	f_B
1/min	Nm				kg	N	N	1/min	Nm	
1.3	**195**	**1.15**	1112	**BK10G06-../D04LA4**	"	7000	-	1.5	165	1.35
1.0	**255**	**0.86**	1361	"	"	7000	-	1.2	210	1.05
2.2	**110**	**3.3**	630.0	**BK20G06-../D04LA4**	34	8700	9000	2.6	89	4.0
1.8	**138**	**2.6**	757.0	"	"	8700	9000	2.2	109	3.3
1.6	**156**	**2.3**	891.2	"	"	8700	9000	1.9	128	2.8
1.3	**195**	**1.85**	1066	"	"	8700	9000	1.6	155	2.3
1.1	**230**	**1.55**	1305	"	"	8700	9000	1.3	192	1.9
0.95	**270**	**1.35**	1424	"	"	8700	9000	1.2	210	1.7
0.85	**305**	**1.2**	1650	"	"	8700	9000	1.0	255	1.4
1.7	**147**	**3.3**	810.9	**BK30G06-../D04LA4**	40	11200	12000	2.0	122	4.0
1.5	**167**	**2.9**	954.1	"	"	11200	12000	1.7	143	3.4
1.2	**210**	**2.3**	1142	"	"	11200	12000	1.5	165	3.0
1.1	**230**	**2.1**	1281	"	"	11200	12000	1.3	192	2.6
0.85	**305**	**1.6**	1620	"	"	11200	12000	1.0	255	1.9
0.8	**325**	**1.5**	1767	"	"	11200	12000	0.95	270	1.8
0.7	**375**	**1.3**	2024	"	"	11200	12000	0.85	305	1.6
0.55	**480**	**1.0**	2533	"	"	11200	12000	0.65	405	1.2

P = 0.06 kW

50 Hz			i	Type	m	F_{RN}	F_{RV}	60 Hz		
n_2	M_2	f_B						n_2	M_2	f_B
1/min	Nm				kg	N	N	1/min	Nm	
63	**8.1**	**9.9**	21.54	**BK06-../D04LA4**	7.6	1150	-	76	6.7	12
52	**9.9**	**8.1**	26.36	"	"	1230	-	62	8.3	9.6
41	**12.5**	**6.4**	33.33	"	"	1320	-	49	10.5	7.6
35.5	**14.5**	**5.5**	38.18	"	"	1380	-	42.5	12.1	6.6
28.5	**17.8**	**4.5**	47.78	"	"	1500	-	34	14.9	5.4
25	**20**	**3.4**	54.38	"	"	1600	-	30	16.9	4.0
21.5	**23.5**	**2.7**	63.33	"	"	1700	-	26	19.6	3.2
11.5	**42**	**3.3**	120.3	**BK10Z-../D06LA4**	24	7000	-	13.5	36	3.8
9.5	**50**	**3.3**	143.2	"	"	7000	-	11.5	41.5	3.9
6.6	**71**	**2.8**	204.7	"	"	7000	-	8.0	58	3.4
5.3	**88**	**2.3**	257.9	"	"	7000	-	6.3	74	2.7
4.5	**103**	**1.8**	302.4	"	"	7000	-	5.4	85	2.2
3.7	**125**	**1.3**	373.4	"	"	7000	-	4.4	105	1.55
3.2	**143**	**1.05**	428.8	"	"	7000	-	3.8	120	1.25
3.0	**129**	**1.7**	459.2	**BK10G06-../D06LA4**	28	7000	-	3.6	104	2.1
2.7	**144**	**1.55**	501.4	"	"	7000	-	3.3	115	1.9
2.5	**157**	**1.4**	552.3	"	"	7000	-	3.0	127	1.75
2.2	**180**	**1.2**	635.5	"	"	7000	-	2.6	149	1.5
1.8	**220**	**1.0**	789.7	"	"	7000	-	2.1	187	1.2
1.5	**265**	**0.83**	929.3	"	"	7000	-	1.8	215	1.0
4.6	**100**	**3.1**	298.2	**BK20Z-../D06LA4**	34	8700	9000	5.5	84	3.7
3.7	**123**	**2.4**	367.7	"	"	8700	9000	4.5	101	2.9
3.2	**120**	**3.0**	429.7	**BK20G06-../D06LA4**	38	8700	9000	3.8	98	3.7
2.9	**133**	**2.7**	480.4	"	"	8700	9000	3.4	110	3.3
2.6	**149**	**2.4**	524.5	"	"	8700	9000	3.1	122	3.0
2.2	**178**	**2.0**	630.0	"	"	8700	9000	2.6	148	2.4
1.8	**220**	**1.65**	757.0	"	"	8700	9000	2.2	178	2.0
1.6	**245**	**1.45**	891.2	"	"	8700	9000	1.9	205	1.75
1.3	**305**	**1.2**	1066	"	"	8700	9000	1.6	245	1.45
1.1	**360**	**1.0**	1305	"	"	8700	9000	1.3	305	1.2
3.6	**128**	**3.1**	380.7	**BK30Z-../D06LA4**	41	11200	12000	4.3	107	3.8
3.1	**147**	**2.6**	441.3	"	"	11200	12000	3.7	123	3.1
2.4	**163**	**3.0**	567.0	**BK30G06-../D06LA4**	44	11200	12000	2.9	132	3.7
2.1	**188**	**2.6**	652.5	"	"	11200	12000	2.5	155	3.2
1.9	**210**	**2.3**	743.0	"	"	11200	12000	2.2	178	2.8

P = 0.06 kW

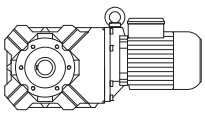

50 Hz			i	Type	m	F_{RN}	F_{RV}	60 Hz		
n_2	M_2	f_B						n_2	M_2	f_B
1/min	Nm				kg	N	N	1/min	Nm	
1.7	**235**	**2.1**	810.9	**BK30G06-../D06LA4**	"	11200	12000	2.0	196	2.5
1.5	**265**	**1.85**	954.1	"	"	11200	12000	1.7	230	2.1
1.2	**330**	**1.5**	1142	"	"	11200	12000	1.5	260	1.9
1.1	**360**	**1.35**	1281	"	"	11200	12000	1.3	305	1.6
0.85	**475**	**1.05**	1620	"	"	11200	12000	1.0	400	1.25
1.2	**290**	**2.9**	1189	**BK40G10-../D06LA4**	68	11700	17000	1.4	240	3.5
0.95	**380**	**2.2**	1428	"	"	11700	17000	1.2	290	2.9
0.8	**465**	**1.85**	1798	"	"	11700	17000	0.95	385	2.2
0.65	**580**	**1.45**	2108	"	"	11700	17000	0.8	465	1.85
0.6	**640**	**1.35**	2350	"	"	11700	17000	0.7	540	1.55
0.55	**700**	**1.2**	2604	"	"	11700	17000	0.65	580	1.45
1.0	**370**	**3.1**	1398	**BK50G10-../D06LA4**	96	14100	26000	1.2	300	3.8
0.9	**415**	**2.8**	1549	"	"	14100	26000	1.1	335	3.4
0.75	**510**	**2.3**	1816	"	"	14100	26000	0.9	415	2.8
0.7	**550**	**2.1**	2024	"	"	14100	26000	0.85	445	2.6
0.6	**630**	**1.85**	2450	"	"	14100	26000	0.7	530	2.2
0.5	**760**	**1.5**	2730	"	"	14100	26000	0.6	620	1.85
0.45	**850**	**1.35**	3025	"	"	14100	26000	0.55	680	1.7
0.39	**960**	**1.2**	3492	"	"	14100	26000	0.47	790	1.45
0.35	**1080**	**1.05**	3870	"	"	14100	26000	0.42	890	1.3
0.39	**920**	**2.7**	3533	**BK60G20-../D06LA4**	123	16600	34000	0.46	690	3.6
0.32	**1240**	**2.0**	4239	"	"	16600	34000	0.39	920	2.7
0.27	**1570**	**1.6**	5072	"	"	16600	34000	0.32	1240	2.0
0.24	**1830**	**1.35**	5721	"	"	16600	34000	0.29	1420	1.75
0.21	**2150**	**1.15**	6565	"	"	16600	34000	0.25	1740	1.45
0.19	**2450**	**1.0**	7291	"	"	16600	34000	0.23	1940	1.3
0.21	**2000**	**2.9**	6504	**BK70G20-../D06LA4**	201	24100	50000	0.25	1580	3.6
0.17	**2650**	**2.2**	8149	"	"	24100	50000	0.2	2150	2.7
0.15	**3100**	**1.85**	9351	"	"	24100	50000	0.18	2450	2.3

P = 0.09 kW

50 Hz			i	Type	m	F_{RN}	F_{RV}	60 Hz		
n_2	M_2	f_B						n_2	M_2	f_B
1/min	Nm				kg	N	N	1/min	Nm	
89	**8.7**	**9.2**	15.29	**BK06-../D04LA4**	7.6	1020	-	106	7.3	11
75	**10.3**	**7.8**	18.00	"	"	1080	-	90	8.5	9.4
63	**12.2**	**6.6**	21.54	"	"	1150	-	76	10.1	7.9
52	**14.8**	**5.4**	26.36	"	"	1230	-	62	12.4	6.5
41	**18.8**	**4.3**	33.33	"	"	1320	-	49	15.7	5.1
35.5	**21.5**	**3.7**	38.18	"	"	1380	-	42.5	18.2	4.4
28.5	**26.5**	**3.0**	47.78	"	"	1500	-	34	22	3.6
25	**30.5**	**2.2**	54.38	"	"	1600	-	30	25	2.7
21.5	**35.5**	**1.8**	63.33	"	"	1700	-	26	29	2.2
13.5	**54**	**2.9**	102.5	**BK10-../D06LA4**	23	7000	-	16	45.5	3.5
11.5	**63**	**2.2**	120.3	**BK10Z-../D06LA4**	24	7000	-	13.5	54	2.5
9.5	**75**	**2.2**	143.2	"	"	7000	-	11.5	62	2.6
8.0	**89**	**2.2**	170.6	"	"	7000	-	9.5	75	2.7
6.6	**106**	**1.9**	204.7	"	"	7000	-	8.0	88	2.3
5.3	**132**	**1.5**	257.9	"	"	7000	-	6.3	111	1.8
4.5	**154**	**1.2**	302.4	"	"	7000	-	5.4	128	1.45
3.7	**188**	**0.88**	373.4	"	"	7000	-	4.4	158	1.05
3.3	**186**	**1.2**	410.8	**BK10G06-../D06LA4**	28	7000	-	4.0	151	1.45
3.0	**205**	**1.05**	459.2	"	"	7000	-	3.6	168	1.3
2.7	**225**	**0.98**	501.4	"	"	7000	-	3.3	184	1.2
2.5	**245**	**0.9**	552.3	"	"	7000	-	3.0	200	1.1
6.6	**106**	**3.1**	207.5	**BK20Z-../D06LA4**	34	8700	9000	7.9	89	3.7
5.2	**135**	**2.4**	259.9	"	"	8700	9000	6.3	111	3.0
4.6	**151**	**2.1**	298.2	"	"	8700	9000	5.5	126	2.5
3.7	**185**	**1.6**	367.7	"	"	8700	9000	4.5	152	1.9

P = 0.09 kW

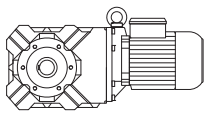

50 Hz			i	Type	m	F_{RN}	F_{RV}	60 Hz		
n_2	M_2	f_B						n_2	M_2	f_B
1/min	Nm				kg	N	N	1/min	Nm	
3.2	**192**	**1.9**	429.7	**BK20G06-../D06LA4**	38	8700	9000	3.8	159	2.3
2.9	**210**	**1.7**	480.4	"	"	8700	9000	3.4	178	2.0
2.6	**235**	**1.55**	524.5	"	"	8700	9000	3.1	196	1.85
2.2	**280**	**1.3**	630.0	"	"	8700	9000	2.6	235	1.55
1.8	**345**	**1.05**	757.0	"	"	8700	9000	2.2	280	1.3
1.6	**385**	**0.94**	891.2	"	"	8700	9000	1.9	320	1.15
4.4	**160**	**2.4**	308.3	**BK30Z-../D06LA4**	41	11200	12000	5.3	132	2.9
3.6	**193**	**2.1**	380.7	"	"	11200	12000	4.3	161	2.5
3.1	**220**	**1.75**	441.3	"	"	11200	12000	3.7	185	2.1
2.9	**210**	**2.3**	471.5	**BK30G06-../D06LA4**	44	11200	12000	3.5	173	2.8
2.4	**255**	**1.9**	567.0	"	"	11200	12000	2.9	210	2.3
2.1	**295**	**1.65**	652.5	"	"	11200	12000	2.5	245	2.0
1.9	**325**	**1.5**	743.0	"	"	11200	12000	2.2	280	1.75
1.7	**365**	**1.35**	810.9	"	"	11200	12000	2.0	305	1.6
1.5	**410**	**1.2**	954.1	"	"	11200	12000	1.7	360	1.35
1.2	**510**	**0.96**	1142	"	"	11200	12000	1.5	410	1.2
1.1	**560**	**0.88**	1281	"	"	11200	12000	1.3	470	1.05
3.9	**178**	**3.3**	348.7	**BK40Z-../D06LA4**	64	11700	17000	4.7	148	3.9
3.2	**210**	**2.7**	430.0	"	"	11700	17000	3.8	180	3.2
1.8	**295**	**2.9**	756.7	**BK40G10-../D06LA4**	68	11700	17000	2.2	230	3.7
1.7	**320**	**2.7**	838.4	"	"	11700	17000	2.0	260	3.3
1.4	**400**	**2.1**	998.3	"	"	11700	17000	1.7	320	2.7
1.2	**475**	**1.8**	1189	"	"	11700	17000	1.4	395	2.2
0.95	**610**	**1.4**	1428	"	"	11700	17000	1.2	475	1.8
0.8	**730**	**1.15**	1798	"	"	11700	17000	0.95	610	1.4
1.6	**350**	**3.3**	859.8	**BK50G10-../D06LA4**	96	14100	26000	1.9	285	4.0
1.4	**410**	**2.8**	1024	"	"	14100	26000	1.6	350	3.3
1.1	**530**	**2.2**	1230	"	"	14100	26000	1.4	410	2.8
1.0	**590**	**1.95**	1398	"	"	14100	26000	1.2	485	2.4
0.9	**660**	**1.75**	1549	"	"	14100	26000	1.1	530	2.2
0.75	**790**	**1.45**	1816	"	"	14100	26000	0.9	650	1.75
0.7	**850**	**1.35**	2024	"	"	14100	26000	0.85	700	1.65
0.6	**980**	**1.15**	2450	"	"	14100	26000	0.7	830	1.4
0.7	**750**	**3.3**	2010	**BK60G20-../D06LA4**	123	16600	34000	0.85	530	4.7
0.6	**930**	**2.7**	2371	"	"	16600	34000	0.7	720	3.5
0.5	**1180**	**2.1**	2733	"	"	16600	34000	0.6	890	2.8
0.45	**1360**	**1.85**	3036	"	"	16600	34000	0.55	1010	2.5
0.39	**1650**	**1.5**	3533	"	"	16600	34000	0.46	1320	1.9
0.32	**2100**	**1.2**	4239	"	"	16600	34000	0.39	1650	1.5
0.35	**1750**	**3.3**	3894	**BK70G20-../D06LA4**	201	24100	50000	0.42	1340	4.3
0.3	**2150**	**2.7**	4531	"	"	24100	50000	0.36	1680	3.4
0.25	**2700**	**2.1**	5436	"	"	24100	50000	0.3	2150	2.7
0.21	**3350**	**1.7**	6504	"	"	24100	50000	0.25	2700	2.1
0.17	**4350**	**1.3**	8149	"	"	24100	50000	0.2	3550	1.6
0.15	**5000**	**1.15**	9351	"	"	24100	50000	0.18	4050	1.4

P = 0.12 kW

50 Hz			i	Type	m	F_{RN}	F_{RV}	60 Hz		
n_2	M_2	f_B						n_2	M_2	f_B
1/min	Nm				kg	N	N	1/min	Nm	
116	**9.0**	**8.9**	11.67	**BK06-../D04LA4**	7.6	930	-	139	7.5	11
89	**11.7**	**6.8**	15.29	"	"	1020	-	106	9.8	8.2
75	**13.7**	**5.8**	18.00	"	"	1080	-	90	11.4	7.0
63	**16.3**	**4.9**	21.54	"	"	1150	-	76	13.5	5.9
52	**19.8**	**4.0**	26.36	"	"	1230	-	62	16.6	4.8
41	**25**	**3.2**	33.33	"	"	1320	-	49	21	3.8
35.5	**29**	**2.8**	38.18	"	"	1380	-	42.5	24	3.3
28.5	**35.5**	**2.3**	47.78	"	"	1500	-	34	29.5	2.7
25	**40.5**	**1.7**	54.38	"	"	1600	-	30	33.5	2.0
21.5	**47**	**1.35**	63.33	"	"	1700	-	26	39	1.65

P = 0.12 kW

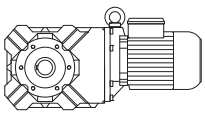

50 Hz			i	Type	m	F_{RN}	F_{RV}	60 Hz		
n_2	M_2	f_B						n_2	M_2	f_B
1/min	Nm				kg	N	N	1/min	Nm	
15.5	**64**	**2.8**	89.30	**BK10-../D06LA4**	23	7000	-	18.5	53	3.4
13.5	**72**	**2.2**	102.5	"	"	7000	-	16	60	2.6
11.5	**84**	**1.65**	120.3	**BK10Z-../D06LA4**	24	7000	-	13.5	72	1.9
9.5	**101**	**1.6**	143.2	"	"	7000	-	11.5	83	1.95
8.0	**118**	**1.7**	170.6	"	"	7000	-	9.5	100	2.0
6.6	**142**	**1.4**	204.7	"	"	7000	-	8.0	117	1.7
5.3	**177**	**1.15**	257.9	"	"	7000	-	6.3	149	1.35
4.5	**205**	**0.9**	302.4	"	"	7000	-	5.4	171	1.1
4.0	**210**	**1.05**	343.2	**BK10G06-../D06LA4**	28	7000	-	4.8	173	1.25
3.3	**255**	**0.86**	410.8	"	"	7000	-	4.0	205	1.05
14	**70**	**3.3**	96.99	**BK20Z-../D06LA4**	34	8700	9000	17	57	4.1
9.4	**102**	**3.2**	144.5	"	"	8700	9000	11.5	83	4.0
7.8	**121**	**2.7**	173.4	"	"	8700	9000	9.4	101	3.3
6.6	**142**	**2.3**	207.5	"	"	8700	9000	7.9	118	2.8
5.2	**180**	**1.85**	259.9	"	"	8700	9000	6.3	149	2.2
4.6	**200**	**1.55**	298.2	"	"	8700	9000	5.5	168	1.85
3.7	**245**	**1.2**	367.7	"	"	8700	9000	4.5	200	1.45
3.2	**260**	**1.4**	429.7	**BK20G06-../D06LA4**	38	8700	9000	3.8	215	1.65
2.9	**290**	**1.25**	480.4	"	"	8700	9000	3.4	245	1.45
2.6	**320**	**1.15**	524.5	"	"	8700	9000	3.1	265	1.35
2.2	**380**	**0.95**	630.0	"	"	8700	9000	2.6	320	1.15
6.3	**149**	**3.0**	216.5	**BK30Z-../D06LA4**	41	11200	12000	7.5	125	3.6
5.3	**177**	**2.5**	255.3	"	"	11200	12000	6.4	146	3.1
4.4	**210**	**1.85**	308.3	"	"	11200	12000	5.3	177	2.2
3.6	**255**	**1.6**	380.7	"	"	11200	12000	4.3	215	1.85
3.1	**295**	**1.3**	441.3	"	"	11200	12000	3.7	245	1.55
2.9	**290**	**1.7**	471.5	**BK30G06-../D06LA4**	44	11200	12000	3.5	235	2.1
2.4	**350**	**1.4**	567.0	"	"	11200	12000	2.9	285	1.7
2.1	**400**	**1.25**	652.5	"	"	11200	12000	2.5	335	1.45
1.9	**445**	**1.1**	743.0	"	"	11200	12000	2.2	380	1.3
1.7	**495**	**0.99**	810.9	"	"	11200	12000	2.0	420	1.15
1.5	**560**	**0.88**	954.1	"	"	11200	12000	1.7	490	1.0
3.9	**235**	**2.5**	348.7	**BK40Z-../D06LA4**	64	11700	17000	4.7	197	2.9
3.2	**285**	**2.0**	430.0	"	"	11700	17000	3.8	240	2.4
2.8	**255**	**3.3**	487.3	**BK40G10-../D06LA4**	68	11700	17000	3.4	200	4.3
2.5	**290**	**2.9**	540.0	"	"	11700	17000	3.0	230	3.7
2.1	**355**	**2.4**	660.2	"	"	11700	17000	2.5	285	3.0
1.8	**420**	**2.0**	756.7	"	"	11700	17000	2.2	330	2.6
1.7	**450**	**1.9**	838.4	"	"	11700	17000	2.0	370	2.3
1.4	**550**	**1.55**	998.3	"	"	11700	17000	1.7	450	1.9
1.2	**660**	**1.3**	1189	"	"	11700	17000	1.4	550	1.55
0.95	**840**	**1.0**	1428	"	"	11700	17000	1.2	660	1.3
3.3	**275**	**3.1**	414.8	**BK50Z-../D06LA4**	92	14100	26000	4.0	225	3.8
2.1	**360**	**3.2**	651.7	**BK50G10-../D06LA4**	96	14100	26000	2.5	295	3.9
1.9	**405**	**2.8**	722.2	"	"	14100	26000	2.3	325	3.5
1.6	**490**	**2.3**	859.8	"	"	14100	26000	1.9	405	2.8
1.4	**560**	**2.1**	1024	"	"	14100	26000	1.6	490	2.3
1.1	**730**	**1.6**	1230	"	"	14100	26000	1.4	570	2.0
1.0	**800**	**1.45**	1398	"	"	14100	26000	1.2	660	1.75
0.9	**900**	**1.3**	1549	"	"	14100	26000	1.1	730	1.6
0.75	**1080**	**1.05**	1816	"	"	14100	26000	0.9	900	1.3
0.85	**930**	**2.7**	1618	**BK60G20-../D06LA4**	123	16600	34000	1.1	630	4.0
0.75	**1070**	**2.3**	1810	"	"	16600	34000	0.9	810	3.1
0.7	**1160**	**2.2**	2010	"	"	16600	34000	0.85	870	2.9
0.6	**1400**	**1.8**	2371	"	"	16600	34000	0.7	1130	2.2
0.5	**1750**	**1.45**	2733	"	"	16600	34000	0.6	1370	1.8
0.45	**1990**	**1.25**	3036	"	"	16600	34000	0.55	1530	1.65
0.39	**2350**	**1.05**	3533	"	"	16600	34000	0.46	1940	1.3
0.45	**1900**	**3.0**	3041	**BK70G20-../D06LA4**	201	24100	50000	0.55	1440	4.0
0.39	**2250**	**2.5**	3505	"	"	24100	50000	0.47	1750	3.3

P = 0.12 kW

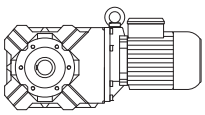

50 Hz			i	Type	m	F_{RN}	F_{RV}	60 Hz		
n_2	M_2	f_B						n_2	M_2	f_B
1/min	Nm				kg	N	N	1/min	Nm	
0.35	**2550**	**2.2**	3894	**BK70G20-../D06LA4**	"	24100	50000	0.42	2000	2.9
0.3	**3100**	**1.85**	4531	"	"	24100	50000	0.36	2450	2.3
0.25	**3850**	**1.5**	5436	"	"	24100	50000	0.3	3100	1.85
0.21	**4750**	**1.2**	6504	"	"	24100	50000	0.25	3850	1.5

P = 0.18 kW

50 Hz			i	Type	m	F_{RN}	F_{RV}	60 Hz		
n_2	M_2	f_B						n_2	M_2	f_B
1/min	Nm				kg	N	N	1/min	Nm	
140	**11.2**	**7.1**	9.71	**BK06-../D05LA4**	9.5	880	-	167	9.4	8.5
116	**13.6**	**5.9**	11.67	"	"	930	-	139	11.3	7.1
89	**17.5**	**4.6**	15.29	"	"	1020	-	106	14.7	5.4
75	**20.5**	**3.9**	18.00	"	"	1080	-	90	17.1	4.7
63	**24.5**	**3.3**	21.54	"	"	1150	-	76	20	4.0
52	**29.5**	**2.7**	26.36	"	"	1230	-	62	24.5	3.3
41	**37.5**	**2.1**	33.33	"	"	1320	-	49	31.5	2.5
35.5	**43.5**	**1.85**	38.18	"	"	1380	-	42.5	36	2.2
28.5	**53**	**1.5**	47.78	"	"	1500	-	34	44.5	1.8
25	**61**	**1.1**	54.38	"	"	1600	-	30	50	1.35
21.5	**71**	**0.89**	63.33	"	"	1700	-	26	58	1.1
22	**69**	**2.9**	61.68	**BK10-../D06LA4**	23	7000	-	26.5	57	3.5
19	**79**	**2.5**	72.31	"	"	7000	-	22.5	67	3.0
15.5	**96**	**1.85**	89.30	"	"	7000	-	18.5	80	2.2
13.5	**108**	**1.45**	102.5	"	"	7000	-	16	91	1.75
11.5	**127**	**1.1**	120.3	**BK10Z-../D06LA4**	24	7000	-	13.5	108	1.25
9.5	**151**	**1.1**	143.2	"	"	7000	-	11.5	125	1.3
8.0	**178**	**1.1**	170.6	"	"	7000	-	9.5	150	1.35
6.6	**210**	**0.95**	204.7	"	"	7000	-	8.0	176	1.15
12.5	**118**	**2.7**	108.6	**BK20-../D06LA4**	33	8700	9000	15	98	3.2
11	**132**	**2.5**	124.2	**BK20Z-../D06LA4**	34	8700	9000	13.5	108	3.1
9.4	**153**	**2.2**	144.5	"	"	8700	9000	11.5	125	2.6
7.8	**182**	**1.8**	173.4	"	"	8700	9000	9.4	151	2.2
6.6	**210**	**1.55**	207.5	"	"	8700	9000	7.9	178	1.85
5.2	**270**	**1.2**	259.9	"	"	8700	9000	6.3	220	1.5
4.6	**300**	**1.05**	298.2	"	"	8700	9000	5.5	250	1.25
3.8	**340**	**1.05**	359.1	**BK20G06-../D06LA4**	38	8700	9000	4.6	280	1.3
3.2	**405**	**0.89**	429.7	"	"	8700	9000	3.8	340	1.05
2.9	**445**	**0.81**	480.4	"	"	8700	9000	3.4	380	0.95
9.4	**153**	**2.9**	145.1	**BK30Z-../D06LA4**	41	11200	12000	11.5	125	3.6
7.4	**192**	**2.3**	184.8	"	"	11200	12000	8.8	162	2.8
6.3	**220**	**2.0**	216.5	"	"	11200	12000	7.5	187	2.4
5.3	**265**	**1.7**	255.3	"	"	11200	12000	6.4	220	2.0
4.4	**320**	**1.2**	308.3	"	"	11200	12000	5.3	265	1.45
3.6	**385**	**1.05**	380.7	"	"	11200	12000	4.3	320	1.25
3.1	**440**	**0.87**	441.3	"	"	11200	12000	3.7	370	1.05
2.9	**445**	**1.1**	471.5	**BK30G06-../D06LA4**	44	11200	12000	3.5	370	1.3
2.4	**540**	**0.91**	567.0	"	"	11200	12000	2.9	445	1.1
2.1	**610**	**0.8**	652.5	"	"	11200	12000	2.5	510	0.96
5.5	**250**	**3.1**	246.6	**BK40Z-../D06LA4**	64	11700	17000	6.6	210	3.7
4.7	**295**	**2.3**	289.8	"	"	11700	17000	5.6	245	2.8
3.9	**355**	**1.65**	348.7	"	"	11700	17000	4.7	295	1.95
3.2	**425**	**1.35**	430.0	"	"	11700	17000	3.8	360	1.6
2.8	**420**	**2.0**	487.3	**BK40G10-../D06LA4**	68	11700	17000	3.4	335	2.5
2.5	**470**	**1.8**	540.0	"	"	11700	17000	3.0	385	2.2
2.1	**560**	**1.5**	660.2	"	"	11700	17000	2.5	465	1.85
1.8	**660**	**1.3**	756.7	"	"	11700	17000	2.2	530	1.6
1.7	**710**	**1.2**	838.4	"	"	11700	17000	2.0	590	1.45
1.4	**870**	**0.98**	998.3	"	"	11700	17000	1.7	710	1.2
1.2	**1020**	**0.83**	1189	"	"	11700	17000	1.4	870	0.98

P = 0.18 kW

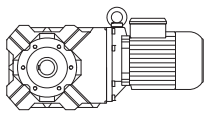

50 Hz			i	Type	m	F_{RN}	F_{RV}	60 Hz		
n_2	M_2	f_B						n_2	M_2	f_B
1/min	Nm				kg	N	N	1/min	Nm	
4.2	**330**	**3.1**	328.2	**BK50Z-../D06LA4**	92	14100	26000	5.0	275	3.7
3.3	**415**	**2.0**	414.8	"	"	14100	26000	4.0	340	2.5
3.0	**395**	**2.9**	465.1	**BK50G10-../D06LA4**	96	14100	26000	3.5	330	3.5
2.7	**440**	**2.6**	513.4	"	"	14100	26000	3.2	365	3.2
2.4	**500**	**2.3**	568.6	"	"	14100	26000	2.9	405	2.8
2.1	**570**	**2.0**	651.7	"	"	14100	26000	2.5	475	2.4
1.9	**640**	**1.8**	722.2	"	"	14100	26000	2.3	520	2.2
1.6	**760**	**1.5**	859.8	"	"	14100	26000	1.9	640	1.8
1.4	**880**	**1.3**	1024	"	"	14100	26000	1.6	760	1.5
1.1	**1120**	**1.05**	1230	"	"	14100	26000	1.4	880	1.3
1.0	**1240**	**0.93**	1398	"	"	14100	26000	1.2	1030	1.1
1.4	**920**	**2.7**	1016	**BK60G20-../D06LA4**	123	16600	34000	1.6	770	3.2
1.1	**1220**	**2.0**	1322	"	"	16600	34000	1.3	980	2.6
0.85	**1610**	**1.55**	1618	"	"	16600	34000	1.1	1150	2.2
0.75	**1830**	**1.35**	1810	"	"	16600	34000	0.9	1450	1.7
0.7	**1980**	**1.25**	2010	"	"	16600	34000	0.85	1550	1.6
0.6	**2350**	**1.05**	2371	"	"	16600	34000	0.7	1950	1.3
0.8	**1720**	**3.3**	1696	**BK70G20-../D06LA4**	201	24100	50000	1.0	1290	4.4
0.7	**1940**	**2.9**	2040	"	"	24100	50000	0.8	1630	3.5
0.55	**2500**	**2.3**	2578	"	"	24100	50000	0.65	2000	2.9
0.45	**3150**	**1.8**	3041	"	"	24100	50000	0.55	2450	2.3
0.39	**3700**	**1.55**	3505	"	"	24100	50000	0.47	2950	1.95
0.35	**4200**	**1.35**	3894	"	"	24100	50000	0.42	3350	1.7
0.3	**5000**	**1.15**	4531	"	"	24100	50000	0.36	4050	1.4

P = 0.25 kW

50 Hz			i	Type	m	F_{RN}	F_{RV}	60 Hz		
n_2	M_2	f_B						n_2	M_2	f_B
1/min	Nm				kg	N	N	1/min	Nm	
140	**15.6**	**5.1**	9.71	**BK06-../D05LA4**	9.5	880	-	167	13.1	6.1
116	**18.9**	**4.2**	11.67	"	"	930	-	139	15.8	5.1
89	**24**	**3.3**	15.29	"	"	1020	-	106	20	4.0
75	**28.5**	**2.8**	18.00	"	"	1080	-	90	23.5	3.4
63	**34**	**2.4**	21.54	"	"	1150	-	76	28	2.9
52	**41**	**1.95**	26.36	"	"	1230	-	62	34.5	2.3
41	**52**	**1.55**	33.33	"	"	1320	-	49	43.5	1.85
35.5	**60**	**1.35**	38.18	"	"	1380	-	42.5	50	1.6
28.5	**74**	**1.1**	47.78	"	"	1500	-	34	62	1.3
25	**84**	**0.81**	54.38	"	"	1600	-	30	70	0.97
33.5	**64**	**3.1**	40.79	**BK10-../D06LA4**	23	6000	-	40	53	3.8
28	**75**	**2.7**	48.96	"	"	6400	-	33.5	63	3.2
22	**96**	**2.1**	61.68	"	"	7000	-	26.5	80	2.5
19	**110**	**1.8**	72.31	"	"	7000	-	22.5	93	2.2
15.5	**134**	**1.35**	89.30	"	"	7000	-	18.5	112	1.6
13.5	**150**	**1.05**	102.5	"	"	7000	-	16	126	1.25
8.0	**245**	**0.82**	170.6	**BK10Z-../D06LA4**	24	7000	-	9.5	205	0.98
18	**116**	**2.8**	76.79	**BK20-../D06LA4**	33	7500	9000	21.5	97	3.4
15.5	**134**	**2.5**	88.12	"	"	8000	9000	18.5	112	2.9
12.5	**164**	**1.9**	108.6	"	"	8700	9000	15	136	2.3
11	**184**	**1.8**	124.2	**BK20Z-../D06LA4**	34	8700	9000	13.5	150	2.2
9.4	**210**	**1.55**	144.5	"	"	8700	9000	11.5	174	1.9
7.8	**250**	**1.3**	173.4	"	"	8700	9000	9.4	210	1.55
6.6	**295**	**1.1**	207.5	"	"	8700	9000	7.9	245	1.35
5.2	**375**	**0.88**	259.9	"	"	8700	9000	6.3	310	1.05
13.5	**150**	**3.0**	102.4	**BK30-../D06LA4**	39	11200	12000	16	126	3.6
11	**184**	**2.4**	123.9	**BK30Z-../D06LA4**	41	11200	12000	13.5	150	3.0
9.4	**210**	**2.1**	145.1	"	"	11200	12000	11.5	174	2.6
7.4	**265**	**1.7**	184.8	"	"	11200	12000	8.8	225	2.0
6.3	**310**	**1.45**	216.5	"	"	11200	12000	7.5	260	1.75

P = 0.25 kW

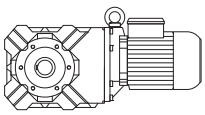

50 Hz			i	Type	m	F_{RN}	F_{RV}	60 Hz		
n_2	M_2	f_B						n_2	M_2	f_B
1/min	Nm				kg	N	N	1/min	Nm	
5.3	**365**	**1.25**	255.3	**BK30Z-../D06LA4**	"	11200	12000	6.4	305	1.5
4.4	**440**	**0.88**	308.3	"	"	11200	12000	5.3	365	1.05
8.0	**245**	**3.2**	169.0	**BK40Z-../D06LA4**	64	11700	17000	9.6	205	3.8
6.4	**305**	**2.6**	211.5	"	"	11700	17000	7.7	250	3.1
5.5	**350**	**2.2**	246.6	"	"	11700	17000	6.6	290	2.7
4.7	**410**	**1.65**	289.8	"	"	11700	17000	5.6	345	2.0
3.9	**495**	**1.15**	348.7	"	"	11700	17000	4.7	410	1.4
3.2	**590**	**0.97**	430.0	"	"	11700	17000	3.8	500	1.15
2.8	**610**	**1.4**	487.3	**BK40G10-../D06LA4**	68	11700	17000	3.4	495	1.7
2.5	**680**	**1.25**	540.0	"	"	11700	17000	3.0	560	1.5
2.1	**810**	**1.05**	660.2	"	"	11700	17000	2.5	680	1.25
1.8	**950**	**0.89**	756.7	"	"	11700	17000	2.2	770	1.1
1.7	**1020**	**0.83**	838.4	"	"	11700	17000	2.0	860	0.99
5.2	**370**	**2.8**	264.5	**BK50Z-../D06LA4**	92	14100	26000	6.2	310	3.4
4.2	**460**	**2.2**	328.2	"	"	14100	26000	5.0	385	2.6
3.3	**570**	**1.5**	414.8	"	"	14100	26000	4.0	475	1.8
3.0	**570**	**2.0**	465.1	**BK50G10-../D06LA4**	96	14100	26000	3.5	485	2.4
2.7	**630**	**1.85**	513.4	"	"	14100	26000	3.2	530	2.2
2.4	**720**	**1.6**	568.6	"	"	14100	26000	2.9	590	1.95
2.1	**820**	**1.4**	651.7	"	"	14100	26000	2.5	680	1.7
1.9	**910**	**1.25**	722.2	"	"	14100	26000	2.3	750	1.55
1.6	**1090**	**1.05**	859.8	"	"	14100	26000	1.9	910	1.25
1.4	**1250**	**0.92**	1024	"	"	14100	26000	1.6	1090	1.05
2.2	**820**	**3.0**	621.5	**BK60G20-../D06LA4**	123	16600	34000	2.7	620	4.0
1.8	**1010**	**2.5**	752.1	"	"	16600	34000	2.2	770	3.2
1.6	**1150**	**2.2**	887.8	"	"	16600	34000	1.9	920	2.7
1.4	**1400**	**1.8**	1016	"	"	16600	34000	1.6	1190	2.1
1.1	**1830**	**1.35**	1322	"	"	16600	34000	1.3	1500	1.65
0.85	**2350**	**1.05**	1618	"	"	16600	34000	1.1	1760	1.4
1.1	**1790**	**3.2**	1280	**BK70G20-../D06LA4**	201	24100	50000	1.3	1450	3.9
0.95	**2050**	**2.8**	1457	"	"	24100	50000	1.2	1560	3.7
0.8	**2550**	**2.2**	1696	"	"	24100	50000	1.0	1950	2.9
0.7	**2850**	**2.0**	2040	"	"	24100	50000	0.8	2450	2.3
0.55	**3700**	**1.55**	2578	"	"	24100	50000	0.65	3050	1.85
0.45	**4650**	**1.25**	3041	"	"	24100	50000	0.55	3650	1.55
0.39	**5400**	**1.05**	3505	"	"	24100	50000	0.47	4350	1.3

P = 0.3 kW

50 Hz			i	Type	m	F_{RN}	F_{RV}	60 Hz		
n_2	M_2	f_B						n_2	M_2	f_B
1/min	Nm				kg	N	N	1/min	Nm	
140	**18.8**	**4.3**	9.71	**BK06-../D07LA4**	14	880	-	167	15.7	5.1
116	**22.5**	**3.6**	11.67	"	"	930	-	139	18.9	4.2
89	**29**	**2.8**	15.29	"	"	1020	-	106	24.5	3.3
75	**34**	**2.4**	18.00	"	"	1080	-	90	28.5	2.8
63	**40.5**	**2.0**	21.54	"	"	1150	-	76	33.5	2.4
52	**49.5**	**1.6**	26.36	"	"	1230	-	62	41.5	1.95
41	**62**	**1.3**	33.33	"	"	1320	-	49	52	1.55
35.5	**72**	**1.1**	38.18	"	"	1380	-	42.5	60	1.35
28.5	**89**	**0.9**	47.78	"	"	1500	-	34	74	1.1
39.5	**65**	**3.1**	34.25	**BK10-../D07LA4**	26	5600	-	47.5	54	3.7
33.5	**76**	**2.6**	40.79	"	"	6000	-	40	64	3.1
28	**91**	**2.2**	48.96	"	"	6400	-	33.5	76	2.6
22	**115**	**1.75**	61.68	"	"	7000	-	26.5	96	2.1
19	**132**	**1.5**	72.31	"	"	7000	-	22.5	112	1.8
15.5	**160**	**1.1**	89.30	"	"	7000	-	18.5	134	1.35
13.5	**180**	**0.87**	102.5	"	"	7000	-	16	152	1.05
22.5	**113**	**2.9**	61.30	**BK20-../D07LA4**	35	6500	9000	26.5	96	3.4
18	**140**	**2.4**	76.79	"	"	7500	9000	21.5	117	2.8
15.5	**160**	**2.1**	88.12	"	"	8000	9000	18.5	134	2.5

P = 0.3 kW

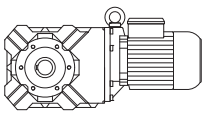

50 Hz			i	Type	m	F_{RN}	F_{RV}	60 Hz		
n_2	M_2	f_B						n_2	M_2	f_B
1/min	Nm				kg	N	N	1/min	Nm	
12.5	**197**	**1.6**	108.6	**BK20-../D07LA4**	"	8700	9000	15	164	1.9
11	**220**	**1.5**	124.2	**BK20Z-../D07LA4**	37	8700	9000	13.5	180	1.85
9.4	**255**	**1.3**	144.5	"	"	8700	9000	11.5	205	1.6
7.8	**300**	**1.1**	173.4	"	"	8700	9000	9.4	250	1.3
6.6	**355**	**0.93**	207.5	"	"	8700	9000	7.9	295	1.1
15.5	**158**	**2.8**	88.38	**BK30-../D07LA4**	41	10600	12000	18.5	133	3.4
13.5	**180**	**2.5**	102.4	"	"	11200	12000	16	152	3.0
11	**220**	**2.0**	123.9	**BK30Z-../D07LA4**	44	11200	12000	13.5	180	2.5
9.4	**255**	**1.75**	145.1	"	"	11200	12000	11.5	205	2.2
7.4	**320**	**1.4**	184.8	"	"	11200	12000	8.8	270	1.65
6.3	**370**	**1.2**	216.5	"	"	11200	12000	7.5	310	1.45
5.3	**440**	**1.0**	255.3	"	"	11200	12000	6.4	365	1.25
9.5	**250**	**3.1**	143.0	**BK40Z-../D07LA4**	66	11700	17000	11.5	205	3.8
8.0	**295**	**2.6**	169.0	"	"	11700	17000	9.6	245	3.2
6.4	**365**	**2.1**	211.5	"	"	11700	17000	7.7	305	2.6
5.5	**420**	**1.85**	246.6	"	"	11700	17000	6.6	350	2.2
4.7	**490**	**1.4**	289.8	"	"	11700	17000	5.6	410	1.65
3.9	**590**	**0.98**	348.7	"	"	11700	17000	4.7	490	1.2
3.2	**710**	**0.81**	430.0	"	"	11700	17000	3.8	600	0.96
2.8	**740**	**1.15**	487.3	**BK40G10-../D07LA4**	71	11700	17000	3.4	600	1.4
2.5	**830**	**1.0**	540.0	"	"	11700	17000	3.0	680	1.25
2.1	**990**	**0.86**	660.2	"	"	11700	17000	2.5	830	1.0
6.6	**355**	**3.0**	206.8	**BK50Z-../D07LA4**	95	14100	26000	7.9	295	3.6
5.2	**445**	**2.4**	264.5	"	"	14100	26000	6.2	370	2.8
4.2	**550**	**1.85**	328.2	"	"	14100	26000	5.0	460	2.2
3.3	**690**	**1.2**	414.8	"	"	14100	26000	4.0	570	1.5
3.0	**700**	**1.65**	465.1	**BK50G10-../D07LA4**	99	14100	26000	3.5	590	1.95
2.7	**780**	**1.45**	513.4	"	"	14100	26000	3.2	650	1.75
2.4	**870**	**1.3**	568.6	"	"	14100	26000	2.9	720	1.6
2.1	**1000**	**1.15**	651.7	"	"	14100	26000	2.5	830	1.4
1.9	**1110**	**1.05**	722.2	"	"	14100	26000	2.3	910	1.25
1.6	**1320**	**0.87**	859.8	"	"	14100	26000	1.9	1110	1.05
2.2	**1040**	**2.4**	621.5	**BK60G20-../D07LA4**	125	16600	34000	2.7	800	3.1
1.8	**1270**	**1.95**	752.1	"	"	16600	34000	2.2	980	2.6
1.6	**1450**	**1.7**	887.8	"	"	16600	34000	1.9	1170	2.1
1.4	**1740**	**1.45**	1016	"	"	16600	34000	1.6	1490	1.7
1.1	**2250**	**1.1**	1322	"	"	16600	34000	1.3	1860	1.35
1.2	**1950**	**2.9**	1139	**BK70G20-../D07LA4**	204	24100	50000	1.5	1480	3.9
1.1	**2200**	**2.6**	1280	"	"	24100	50000	1.3	1820	3.1
0.95	**2550**	**2.2**	1457	"	"	24100	50000	1.2	1950	2.9
0.8	**3150**	**1.8**	1696	"	"	24100	50000	1.0	2400	2.4
0.7	**3550**	**1.6**	2040	"	"	24100	50000	0.8	3050	1.85
0.55	**4600**	**1.25**	2578	"	"	24100	50000	0.65	3800	1.5

P = 0.37 kW

50 Hz			i	Type	m	F_{RN}	F_{RV}	60 Hz		
n_2	M_2	f_B						n_2	M_2	f_B
1/min	Nm				kg	N	N	1/min	Nm	
140	**23**	**3.5**	9.71	**BK06-../D07LA4**	14	880	-	167	19.4	4.1
116	**28**	**2.9**	11.67	"	"	930	-	139	23	3.5
89	**36**	**2.2**	15.29	"	"	1020	-	106	30	2.7
75	**42**	**1.9**	18.00	"	"	1080	-	90	35	2.3
63	**50**	**1.6**	21.54	"	"	1150	-	76	41.5	1.95
52	**61**	**1.3**	26.36	"	"	1230	-	62	51	1.55
41	**77**	**1.05**	33.33	"	"	1320	-	49	64	1.25
35.5	**89**	**0.9**	38.18	"	"	1380	-	42.5	74	1.1

P = 0.37 kW

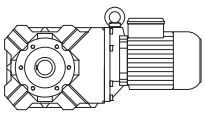

50 Hz			i	Type	m	F_{RN}	F_{RV}	60 Hz		
n_2	M_2	f_B						n_2	M_2	f_B
1/min	Nm				kg	N	N	1/min	Nm	
47	**67**	**3.0**	28.76	**BK10-../D07LA4**	26	5200	-	57	55	3.6
39.5	**80**	**2.5**	34.25	"	"	5600	-	47.5	66	3.0
33.5	**94**	**2.1**	40.79	"	"	6000	-	40	79	2.5
28	**112**	**1.8**	48.96	"	"	6400	-	33.5	93	2.2
22	**142**	**1.4**	61.68	"	"	7000	-	26.5	118	1.7
19	**163**	**1.25**	72.31	"	"	7000	-	22.5	138	1.45
15.5	**198**	**0.9**	89.30	"	"	7000	-	18.5	166	1.05
32	**99**	**3.3**	42.70	**BK20-../D07LA4**	35	5800	9000	38	83	4.0
26.5	**118**	**2.8**	51.22	"	"	6300	9000	32	98	3.4
22.5	**139**	**2.4**	61.30	"	"	6500	9000	26.5	118	2.8
18	**172**	**1.9**	76.79	"	"	7500	9000	21.5	144	2.3
15.5	**198**	**1.65**	88.12	"	"	8000	9000	18.5	166	2.0
12.5	**240**	**1.3**	108.6	"	"	8700	9000	15	200	1.6
11	**270**	**1.2**	124.2	**BK20Z-../D07LA4**	37	8700	9000	13.5	220	1.5
9.4	**315**	**1.05**	144.5	"	"	8700	9000	11.5	255	1.3
7.8	**375**	**0.88**	173.4	"	"	8700	9000	9.4	310	1.05
23	**135**	**3.3**	59.27	**BK30-../D07LA4**	41	8900	12000	27.5	113	4.0
19	**161**	**2.8**	71.56	"	"	9700	12000	23	133	3.4
15.5	**196**	**2.3**	88.38	"	"	10600	12000	18.5	164	2.7
13.5	**220**	**2.0**	102.4	"	"	11200	12000	16	187	2.4
11	**270**	**1.65**	123.9	**BK30Z-../D07LA4**	44	11200	12000	13.5	220	2.0
9.4	**315**	**1.45**	145.1	"	"	11200	12000	11.5	255	1.75
7.4	**395**	**1.15**	184.8	"	"	11200	12000	8.8	330	1.35
6.3	**455**	**0.99**	216.5	"	"	11200	12000	7.5	385	1.15
5.3	**540**	**0.83**	255.3	"	"	11200	12000	6.4	450	1.0
11.5	**260**	**3.0**	118.2	**BK40Z-../D07LA4**	66	11700	17000	14	210	3.7
9.5	**310**	**2.5**	143.0	"	"	11700	17000	11.5	255	3.1
8.0	**365**	**2.1**	169.0	"	"	11700	17000	9.6	305	2.6
6.4	**450**	**1.75**	211.5	"	"	11700	17000	7.7	375	2.1
5.5	**520**	**1.5**	246.6	"	"	11700	17000	6.6	430	1.8
4.7	**600**	**1.15**	289.8	"	"	11700	17000	5.6	510	1.35
3.9	**730**	**0.8**	348.7	"	"	11700	17000	4.7	600	0.97
2.8	**930**	**0.91**	487.3	**BK40G10-../D07LA4**	71	11700	17000	3.4	760	1.1
2.5	**1040**	**0.82**	540.0	"	"	11700	17000	3.0	860	0.99
8.9	**325**	**3.2**	153.3	**BK50Z-../D07LA4**	95	14100	26000	11	265	4.0
6.6	**435**	**2.4**	206.8	"	"	14100	26000	7.9	365	2.9
5.2	**550**	**1.9**	264.5	"	"	14100	26000	6.2	460	2.3
4.2	**680**	**1.5**	328.2	"	"	14100	26000	5.0	570	1.75
3.3	**850**	**0.99**	414.8	"	"	14100	26000	4.0	700	1.2
3.0	**870**	**1.3**	465.1	**BK50G10-../D07LA4**	99	14100	26000	3.5	740	1.55
2.7	**970**	**1.2**	513.4	"	"	14100	26000	3.2	810	1.4
2.4	**1090**	**1.05**	568.6	"	"	14100	26000	2.9	900	1.3
2.1	**1250**	**0.92**	651.7	"	"	14100	26000	2.5	1050	1.1
1.9	**1380**	**0.83**	722.2	"	"	14100	26000	2.3	1140	1.0
2.2	**1340**	**1.85**	621.5	**BK60G20-../D07LA4**	125	16600	34000	2.7	1040	2.4
1.8	**1640**	**1.5**	752.1	"	"	16600	34000	2.2	1290	1.95
1.6	**1870**	**1.35**	887.8	"	"	16600	34000	1.9	1520	1.65
1.4	**2200**	**1.15**	1016	"	"	16600	34000	1.6	1900	1.3
1.1	**2850**	**0.88**	1322	"	"	16600	34000	1.3	2350	1.05
1.6	**1850**	**3.1**	847.7	**BK70G20-../D07LA4**	204	24100	50000	2.0	1410	4.0
1.4	**2100**	**2.7**	964.6	"	"	24100	50000	1.7	1670	3.4
1.2	**2500**	**2.3**	1139	"	"	24100	50000	1.5	1920	3.0
1.1	**2800**	**2.0**	1280	"	"	24100	50000	1.3	2300	2.5
0.95	**3250**	**1.75**	1457	"	"	24100	50000	1.2	2500	2.3
0.8	**3950**	**1.45**	1696	"	"	24100	50000	1.0	3100	1.85
0.7	**4500**	**1.25**	2040	"	"	24100	50000	0.8	3900	1.45

P = 0.55 kW

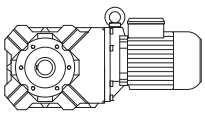

50 Hz			i	Type	m	F_{RN}	F_{RV}	60 Hz		
n_2	M_2	f_B						n_2	M_2	f_B
1/min	Nm				kg	N	N	1/min	Nm	
194	**24.5**	**3.0**	7.25	**BK06-../D08MA4**	15	790	-	235	20.5	3.6
145	**33**	**2.4**	9.71	"	"	880	-	174	27.5	2.9
120	**40**	**2.0**	11.67	"	"	930	-	144	33.5	2.4
92	**51**	**1.55**	15.29	"	"	1020	-	110	43	1.85
78	**60**	**1.35**	18.00	"	"	1080	-	94	50	1.6
65	**72**	**1.1**	21.54	"	"	1150	-	78	60	1.35
54	**87**	**0.92**	26.36	"	"	1230	-	64	73	1.1
118	**40.5**	**2.8**	11.93	**BK10-../D08MA4**	27	3100	-	141	34	3.4
83	**56**	**2.4**	16.92	"	"	3700	-	100	47	2.9
76	**62**	**3.2**	18.52	"	"	4300	-	91	51	3.9
62	**76**	**2.6**	22.65	"	"	4650	-	75	63	3.2
49	**96**	**2.1**	28.76	"	"	5200	-	59	80	2.5
41	**115**	**1.75**	34.25	"	"	5600	-	49.5	95	2.1
34.5	**137**	**1.45**	40.79	"	"	6000	-	41.5	113	1.75
29	**161**	**1.25**	48.96	"	"	6400	-	34.5	135	1.5
23	**200**	**1.0**	61.68	"	"	7000	-	27.5	169	1.2
19.5	**235**	**0.85**	72.31	"	"	7000	-	23.5	196	1.0
38.5	**122**	**2.7**	36.69	**BK20-../D08MA4**	36	5400	9000	46	102	3.2
33	**143**	**2.3**	42.70	"	"	5800	9000	39.5	119	2.8
27.5	**169**	**1.95**	51.22	"	"	6300	9000	33	141	2.3
23	**200**	**1.65**	61.30	"	"	6500	9000	27.5	169	1.95
18.5	**245**	**1.35**	76.79	"	"	7500	9000	22	210	1.55
16	**285**	**1.15**	88.12	"	"	8000	9000	19.5	230	1.45
13	**345**	**0.91**	108.6	"	"	8700	9000	15.5	290	1.1
11.5	**385**	**0.86**	124.2	**BK20Z-../D08MA4**	38	8700	9000	14	315	1.05
33	**141**	**3.2**	42.89	**BK30-../D08MA4**	42	7800	12000	39.5	118	3.8
28	**165**	**2.7**	50.27	"	"	8300	12000	33.5	137	3.3
24	**192**	**2.3**	59.27	"	"	8900	12000	28.5	162	2.8
20	**225**	**2.0**	71.56	"	"	9700	12000	23.5	194	2.3
16	**280**	**1.6**	88.38	"	"	10600	12000	19.5	230	1.95
14	**315**	**1.45**	102.4	"	"	11200	12000	16.5	270	1.65
11.5	**385**	**1.15**	123.9	**BK30Z-../D08MA4**	45	11200	12000	14	315	1.45
9.7	**450**	**1.0**	145.1	"	"	11200	12000	12	365	1.25
17	**265**	**2.9**	84.36	**BK40-../D08MA4**	63	10700	17000	20	225	3.5
13.5	**330**	**2.4**	104.0	"	"	11700	17000	16.5	270	2.9
12	**370**	**2.1**	118.2	**BK40Z-../D08MA4**	67	11700	17000	14.5	305	2.6
9.8	**450**	**1.75**	143.0	"	"	11700	17000	12	365	2.1
8.3	**520**	**1.5**	169.0	"	"	11700	17000	10	435	1.8
6.7	**640**	**1.2**	211.5	"	"	11700	17000	8.0	530	1.45
5.7	**740**	**1.05**	246.6	"	"	11700	17000	6.9	610	1.3
4.9	**860**	**0.8**	289.8	"	"	11700	17000	5.8	730	0.94
12.5	**355**	**3.0**	115.4	**BK50Z-../D08MA4**	96	14100	26000	15	295	3.6
9.2	**470**	**2.2**	153.3	"	"	14100	26000	11	395	2.7
6.8	**630**	**1.65**	206.8	"	"	14100	26000	8.2	520	2.0
5.3	**800**	**1.3**	264.5	"	"	14100	26000	6.4	660	1.6
4.3	**980**	**1.05**	328.2	"	"	14100	26000	5.2	810	1.25
3.1	**1290**	**0.89**	465.1	**BK50G10-../D08MA4**	100	14100	26000	3.7	1080	1.05
2.8	**1420**	**0.81**	513.4	"	"	14100	26000	3.3	1210	0.95
6.9	**760**	**3.0**	205.0	**BK60Z-../D08MA4**	119	16600	34000	8.2	640	3.6
5.9	**890**	**2.6**	239.7	"	"	16600	34000	7.1	730	3.2
5.3	**990**	**2.3**	268.2	"	"	16600	34000	6.3	830	2.8
4.5	**1160**	**2.0**	317.7	"	"	16600	34000	5.3	990	2.3
4.0	**1310**	**1.75**	355.5	"	"	16600	34000	4.8	1090	2.1
3.5	**1500**	**1.55**	411.5	"	"	16600	34000	4.1	1280	1.8
3.1	**1690**	**1.35**	460.4	"	"	16600	34000	3.7	1410	1.65
2.9	**1810**	**1.25**	498.0	"	"	16600	34000	3.4	1540	1.5
2.6	**2000**	**1.15**	557.2	"	"	16600	34000	3.1	1690	1.35
2.3	**2000**	**1.25**	621.5	**BK60G20-../D08MA4**	126	16600	34000	2.8	1610	1.55
1.9	**2400**	**1.05**	752.1	"	"	16600	34000	2.3	1960	1.3
1.6	**2900**	**0.86**	887.8	"	"	16600	34000	1.9	2400	1.05

P = 0.55 kW

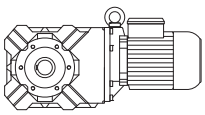

50 Hz			i	Type	m	F_{RN}	F_{RV}	60 Hz		
n_2	M_2	f_B						n_2	M_2	f_B
1/min	Nm				kg	N	N	1/min	Nm	
3.3	**1590**	**3.3**	432.1	**BK70Z-../D08MA4**	207	24100	50000	3.9	1340	3.9
2.8	**1870**	**2.8**	501.8	"	"	24100	50000	3.4	1540	3.4
2.5	**2100**	**2.5**	570.8	"	"	24100	50000	3.0	1750	3.0
2.2	**2350**	**2.2**	644.9	"	"	24100	50000	2.7	1940	2.7
2.0	**2600**	**2.0**	733.6	"	"	24100	50000	2.3	2250	2.3
1.7	**2700**	**2.1**	847.7	**BK70G20-../D08MA4**	205	24100	50000	2.0	2250	2.5
1.5	**3050**	**1.85**	964.6	"	"	24100	50000	1.8	2500	2.3
1.3	**3600**	**1.6**	1139	"	"	24100	50000	1.5	3050	1.85
1.1	**4350**	**1.3**	1280	"	"	24100	50000	1.4	3350	1.7
1.0	**4800**	**1.2**	1457	"	"	24100	50000	1.2	3900	1.45
1.1	**3750**	**3.1**	1307	**BK80G40-../D08MA4**	347	30000	75000	1.3	3000	3.8
1.0	**4050**	**2.8**	1425	"	"	30000	75000	1.2	3150	3.7
0.9	**4600**	**2.5**	1583	"	"	30000	75000	1.1	3550	3.2
0.8	**5200**	**2.2**	1775	"	"	30000	75000	0.95	4200	2.7
0.65	**6600**	**1.75**	2205	"	"	30000	75000	0.8	5100	2.3
0.6	**7300**	**1.6**	2449	"	"	30000	75000	0.7	6000	1.9
0.5	**9000**	**1.3**	2811	"	"	30000	75000	0.6	7200	1.6
0.45	**10200**	**1.15**	3120	"	"	30000	75000	0.55	8000	1.45
0.55	**7400**	**2.5**	2764	**BK90G50-../D08MA4**	620	49400	120000	0.65	5900	3.1
0.46	**9300**	**2.0**	3065	"	"	49400	120000	0.55	7400	2.5
0.39	**11300**	**1.65**	3672	"	"	49400	120000	0.46	9300	2.0
0.35	**12900**	**1.45**	4070	"	"	49400	120000	0.42	10300	1.8
0.29	**16000**	**1.15**	4952	"	"	49400	120000	0.34	13300	1.4
0.26	**18000**	**1.05**	5491	"	"	49400	120000	0.31	14800	1.25

P = 0.75 kW

50 Hz			i	Type	m	F_{RN}	F_{RV}	60 Hz		
n_2	M_2	f_B						n_2	M_2	f_B
1/min	Nm				kg	N	N	1/min	Nm	
194	**33.5**	**2.2**	7.25	**BK06-../DSE08LA4**	16	790	-	235	28	2.6
145	**45**	**1.8**	9.71	"	"	880	-	174	37.5	2.1
120	**54**	**1.5**	11.67	"	"	930	-	144	45.5	1.75
92	**70**	**1.15**	15.29	"	"	1020	-	110	59	1.35
78	**82**	**0.98**	18.00	"	"	1080	-	94	68	1.2
65	**99**	**0.81**	21.54	"	"	1150	-	78	82	0.98
183	**36**	**3.2**	7.68	**BK10-../DSE08LA4**	28	2400	-	220	29.5	3.9
149	**44**	**2.6**	9.40	"	"	2700	-	179	36.5	3.2
118	**55**	**2.1**	11.93	"	"	3100	-	141	46.5	2.5
97	**66**	**3.0**	14.50	"	"	3900	-	116	55	3.6
83	**77**	**1.75**	16.92	"	"	3700	-	100	64	2.1
76	**84**	**2.4**	18.52	"	"	4300	-	91	70	2.9
62	**103**	**1.95**	22.65	"	"	4650	-	75	85	2.4
49	**131**	**1.55**	28.76	"	"	5200	-	59	109	1.85
41	**157**	**1.25**	34.25	"	"	5600	-	49.5	130	1.55
34.5	**186**	**1.1**	40.79	"	"	6000	-	41.5	155	1.3
29	**215**	**0.93**	48.96	"	"	6400	-	34.5	184	1.1
81	**80**	**2.9**	17.42	**BK20-../DSE08LA4**	38	3250	9000	97	67	3.4
58	**111**	**3.0**	24.29	"	"	4500	9000	70	92	3.6
49	**131**	**2.5**	28.66	"	"	4850	9000	59	109	3.0
38.5	**167**	**2.0**	36.69	"	"	5400	9000	46	140	2.4
33	**195**	**1.7**	42.70	"	"	5800	9000	39.5	163	2.0
27.5	**230**	**1.45**	51.22	"	"	6300	9000	33	193	1.7
23	**275**	**1.2**	61.30	"	"	6500	9000	27.5	230	1.45
18.5	**340**	**0.97**	76.79	"	"	7500	9000	22	285	1.15
16	**385**	**0.86**	88.12	"	"	8000	9000	19.5	315	1.05
42	**153**	**2.9**	33.70	**BK30-../DSE08LA4**	44	7000	12000	50	128	3.5
33	**193**	**2.3**	42.89	"	"	7800	12000	39.5	161	2.8
28	**225**	**2.0**	50.27	"	"	8300	12000	33.5	188	2.4
24	**260**	**1.75**	59.27	"	"	8900	12000	28.5	220	2.0

P = 0.75 kW

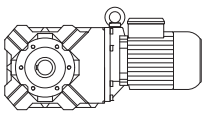

50 Hz			i	Type	m	F_{RN}	F_{RV}	60 Hz		
n_2	M_2	f_B						n_2	M_2	f_B
1/min	Nm				kg	N	N	1/min	Nm	
20	**310**	**1.45**	71.56	**BK30-../DSE08LA4**	"	9700	12000	23.5	265	1.7
16	**380**	**1.2**	88.38	"	"	10600	12000	19.5	315	1.45
14	**430**	**1.05**	102.4	"	"	11200	12000	16.5	365	1.25
11.5	**520**	**0.87**	123.9	**BK30Z-../DSE08LA4**	46	11200	12000	14	430	1.05
23.5	**265**	**2.9**	59.66	**BK40-../DSE08LA4**	64	9100	17000	28.5	220	3.5
20	**310**	**2.5**	70.11	"	"	9800	17000	24	255	3.1
17	**365**	**2.1**	84.36	"	"	10700	17000	20	310	2.5
13.5	**450**	**1.75**	104.0	"	"	11700	17000	16.5	365	2.1
12	**500**	**1.55**	118.2	**BK40Z-../DSE08LA4**	69	11700	17000	14.5	415	1.9
9.8	**610**	**1.3**	143.0	"	"	11700	17000	12	500	1.55
8.3	**710**	**1.1**	169.0	"	"	11700	17000	10	590	1.3
6.7	**870**	**0.9**	211.5	"	"	11700	17000	8.0	730	1.05
19	**325**	**3.2**	75.40	**BK50-../DSE08LA4**	93	12600	26000	22.5	275	3.8
15	**410**	**2.6**	95.29	"	"	14100	26000	18	340	3.1
12.5	**485**	**2.2**	115.4	**BK50Z-../DSE08LA4**	98	14100	26000	15	405	2.6
9.2	**640**	**1.65**	153.3	"	"	14100	26000	11	540	1.95
6.8	**860**	**1.2**	206.8	"	"	14100	26000	8.2	710	1.5
5.3	**1090**	**0.96**	264.5	"	"	14100	26000	6.4	900	1.15
9.2	**770**	**3.0**	153.7	**BK60Z-../DSE08LA4**	120	16600	34000	11	650	3.5
7.7	**930**	**2.5**	183.2	"	"	16600	34000	9.2	770	3.0
6.9	**1030**	**2.2**	205.0	"	"	16600	34000	8.2	870	2.6
5.9	**1210**	**1.9**	239.7	"	"	16600	34000	7.1	1000	2.3
5.3	**1350**	**1.7**	268.2	"	"	16600	34000	6.3	1130	2.0
4.5	**1590**	**1.45**	317.7	"	"	16600	34000	5.3	1350	1.7
4.0	**1790**	**1.3**	355.5	"	"	16600	34000	4.8	1490	1.55
3.5	**2000**	**1.15**	411.5	"	"	16600	34000	4.1	1740	1.3
3.1	**2300**	**1.0**	460.4	"	"	16600	34000	3.7	1930	1.2
2.9	**2450**	**0.94**	498.0	"	"	16600	34000	3.4	2100	1.1
2.6	**2750**	**0.84**	557.2	"	"	16600	34000	3.1	2300	1.0
2.3	**2850**	**0.88**	621.5	**BK60G20-../DSE08LA4**	128	16600	34000	2.8	2250	1.1
4.2	**1700**	**3.1**	333.6	**BK70Z-../DSE08LA4**	208	24100	50000	5.1	1400	3.7
3.7	**1930**	**2.7**	379.9	"	"	24100	50000	4.5	1590	3.3
3.3	**2150**	**2.4**	432.1	"	"	24100	50000	3.9	1830	2.8
2.8	**2550**	**2.0**	501.8	"	"	24100	50000	3.4	2100	2.5
2.5	**2850**	**1.8**	570.8	"	"	24100	50000	3.0	2350	2.2
2.2	**3250**	**1.6**	644.9	"	"	24100	50000	2.7	2650	1.95
2.0	**3550**	**1.45**	733.6	"	"	24100	50000	2.3	3100	1.7
1.7	**3850**	**1.5**	847.7	**BK70G20-../DSE08LA4**	206	24100	50000	2.0	3200	1.8
1.5	**4350**	**1.3**	964.6	"	"	24100	50000	1.8	3550	1.6
1.3	**5000**	**1.15**	1139	"	"	24100	50000	1.5	4300	1.35
1.1	**6100**	**0.93**	1280	"	"	24100	50000	1.4	4700	1.2
1.0	**6700**	**0.85**	1457	"	"	24100	50000	1.2	5500	1.05
1.5	**3850**	**3.0**	963.0	**BK80G40-../DSE08LA4**	348	30000	75000	1.8	3050	3.8
1.3	**4450**	**2.6**	1079	"	"	30000	75000	1.6	3450	3.3
1.1	**5400**	**2.1**	1307	"	"	30000	75000	1.3	4450	2.6
1.0	**5900**	**1.95**	1425	"	"	30000	75000	1.2	4750	2.4
0.9	**6700**	**1.7**	1583	"	"	30000	75000	1.1	5200	2.2
0.8	**7600**	**1.5**	1775	"	"	30000	75000	0.95	6200	1.85
0.65	**9600**	**1.2**	2205	"	"	30000	75000	0.8	7500	1.55
0.6	**10400**	**1.1**	2449	"	"	30000	75000	0.7	8700	1.3
0.9	**6400**	**2.9**	1579	**BK90G50-../DSE08LA4**	621	49400	120000	1.1	5000	3.7
0.8	**7200**	**2.6**	1803	"	"	49400	120000	0.95	5800	3.2
0.7	**8300**	**2.2**	2016	"	"	49400	120000	0.85	6500	2.8
0.55	**10900**	**1.7**	2764	"	"	49400	120000	0.65	8900	2.1
0.46	**13400**	**1.4**	3065	"	"	49400	120000	0.55	10900	1.7
0.39	**16200**	**1.15**	3672	"	"	49400	120000	0.46	13400	1.4
0.35	**18300**	**1.0**	4070	"	"	49400	120000	0.42	14900	1.25

P = 1.1 kW

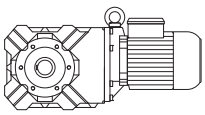

50 Hz			i	Type	m	F_{RN}	F_{RV}	60 Hz		
n_2	M_2	f_B						n_2	M_2	f_B
1/min	Nm				kg	N	N	1/min	Nm	
194	**49.5**	**1.45**	7.25	**BK06-../DSE08XA4**	18	790	-	235	41	1.8
145	**66**	**1.2**	9.71	"	"	880	-	174	55	1.45
120	**80**	**1.0**	11.67	"	"	930	-	144	67	1.2
320	**30**	**3.2**	4.44	**BK10-../DSE08XA4**	30	1890	-	380	25	3.8
235	**41**	**2.6**	6.02	"	"	2100	-	280	34.5	3.0
183	**52**	**2.2**	7.68	"	"	2400	-	220	43.5	2.6
149	**64**	**1.8**	9.40	"	"	2700	-	179	53	2.2
131	**72**	**2.5**	10.70	"	"	3500	-	158	59	3.1
118	**81**	**1.4**	11.93	"	"	3100	-	141	68	1.7
97	**97**	**2.1**	14.50	"	"	3900	-	116	81	2.5
83	**113**	**1.2**	16.92	"	"	3700	-	100	94	1.45
76	**124**	**1.6**	18.52	"	"	4300	-	91	103	1.95
62	**152**	**1.3**	22.65	"	"	4650	-	75	126	1.6
49	**192**	**1.05**	28.76	"	"	5200	-	59	160	1.25
41	**230**	**0.87**	34.25	"	"	5600	-	49.5	191	1.05
120	**80**	**2.9**	11.69	**BK20-../DSE08XA4**	39	2400	8800	144	67	3.4
95	**99**	**3.3**	14.75	"	"	3650	9000	114	82	4.0
81	**118**	**1.95**	17.42	"	"	3250	9000	97	98	2.4
73	**129**	**2.6**	19.39	"	"	4050	9000	87	108	3.1
58	**163**	**2.0**	24.29	"	"	4500	9000	70	135	2.4
49	**192**	**1.7**	28.66	"	"	4850	9000	59	160	2.1
38.5	**245**	**1.35**	36.69	"	"	5400	9000	46	205	1.6
33	**285**	**1.15**	42.70	"	"	5800	9000	39.5	235	1.4
27.5	**335**	**0.99**	51.22	"	"	6300	9000	33	280	1.2
23	**405**	**0.81**	61.30	"	"	6500	9000	27.5	335	0.99
68	**140**	**2.3**	20.85	**BK30-../DSE08XA4**	45	5000	12000	81	118	2.7
61	**154**	**2.9**	23.20	"	"	5900	12000	73	129	3.5
49	**192**	**2.3**	28.76	"	"	6500	12000	59	160	2.8
42	**225**	**2.0**	33.70	"	"	7000	12000	50	189	2.4
33	**280**	**1.6**	42.89	"	"	7800	12000	39.5	235	1.9
28	**330**	**1.35**	50.27	"	"	8300	12000	33.5	275	1.65
24	**385**	**1.15**	59.27	"	"	8900	12000	28.5	320	1.4
20	**455**	**0.99**	71.56	"	"	9700	12000	23.5	385	1.15
16	**560**	**0.8**	88.38	"	"	10600	12000	19.5	460	0.98
34.5	**270**	**2.9**	40.88	**BK40-../DSE08XA4**	65	7600	17000	41.5	225	3.5
27.5	**335**	**2.3**	51.18	"	"	8400	17000	33	280	2.8
23.5	**390**	**2.0**	59.66	"	"	9100	17000	28.5	320	2.4
20	**455**	**1.7**	70.11	"	"	9800	17000	24	380	2.1
17	**530**	**1.45**	84.36	"	"	10700	17000	20	455	1.7
13.5	**660**	**1.2**	104.0	"	"	11700	17000	16.5	540	1.45
12	**740**	**1.05**	118.2	**BK40Z-../DSE08XA4**	70	11700	17000	14.5	610	1.3
9.8	**900**	**0.87**	143.0	"	"	11700	17000	12	730	1.05
29.5	**315**	**3.3**	47.50	**BK50-../DSE08XA4**	94	10100	25700	35.5	260	4.0
23.5	**390**	**2.7**	60.76	"	"	11400	26000	28	330	3.2
19	**480**	**2.2**	75.40	"	"	12600	26000	22.5	405	2.6
15	**600**	**1.75**	95.29	"	"	14100	26000	18	500	2.1
12.5	**710**	**1.5**	115.4	**BK50Z-../DSE08XA4**	98	14100	26000	15	590	1.8
9.2	**940**	**1.1**	153.3	"	"	14100	26000	11	790	1.35
6.8	**1260**	**0.83**	206.8	"	"	14100	26000	8.2	1050	1.0
9.2	**1140**	**2.0**	153.7	**BK60Z-../DSE08XA4**	121	16600	34000	11	950	2.4
7.7	**1360**	**1.7**	183.2	"	"	16600	34000	9.2	1140	2.0
6.9	**1520**	**1.5**	205.0	"	"	16600	34000	8.2	1280	1.8
5.9	**1780**	**1.3**	239.7	"	"	16600	34000	7.1	1470	1.55
5.3	**1980**	**1.15**	268.2	"	"	16600	34000	6.3	1660	1.4
4.5	**2300**	**1.0**	317.7	"	"	16600	34000	5.3	1980	1.15
4.0	**2600**	**0.88**	355.5	"	"	16600	34000	4.8	2150	1.05
6.2	**1690**	**3.1**	226.2	**BK70Z-../DSE08XA4**	210	24100	50000	7.5	1400	3.7
5.5	**1910**	**2.7**	257.3	"	"	24100	50000	6.6	1590	3.3
4.8	**2150**	**2.4**	293.3	"	"	24100	50000	5.8	1810	2.9

P = 1.1 kW

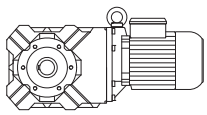

50 Hz			i	Type	m	F_{RN}	F_{RV}	60 Hz		
n_2	M_2	f_B						n_2	M_2	f_B
1/min	Nm				kg	N	N	1/min	Nm	
4.2	**2500**	**2.1**	333.6	**BK70Z-../DSE08XA4**	"	24100	50000	5.1	2050	2.5
3.7	**2800**	**1.85**	379.9	"	"	24100	50000	4.5	2300	2.3
3.3	**3150**	**1.65**	432.1	"	"	24100	50000	3.9	2650	1.95
2.8	**3750**	**1.4**	501.8	"	"	24100	50000	3.4	3050	1.7
2.5	**4200**	**1.25**	570.8	"	"	24100	50000	3.0	3500	1.5
2.2	**4750**	**1.1**	644.9	"	"	24100	50000	2.7	3850	1.35
2.0	**5200**	**1.0**	733.6	"	"	24100	50000	2.3	4550	1.15
1.7	**5800**	**0.98**	847.7	**BK70G20-../DSE08XA4**	207	24100	50000	2.0	4850	1.2
1.5	**6500**	**0.88**	964.6	"	"	24100	50000	1.8	5400	1.05
2.4	**3600**	**3.2**	607.8	**BK80G40-../DSE08XA4**	349	30000	75000	2.8	3000	3.8
2.1	**4150**	**2.8**	680.9	"	"	30000	75000	2.5	3350	3.4
1.9	**4700**	**2.4**	756.3	"	"	30000	75000	2.3	3700	3.1
1.7	**5200**	**2.2**	847.2	"	"	30000	75000	2.0	4300	2.7
1.5	**6100**	**1.9**	963.0	"	"	30000	75000	1.8	4900	2.3
1.3	**7000**	**1.65**	1079	"	"	30000	75000	1.6	5500	2.1
1.1	**8500**	**1.35**	1307	"	"	30000	75000	1.3	7000	1.65
1.0	**9300**	**1.25**	1425	"	"	30000	75000	1.2	7500	1.55
0.9	**10400**	**1.1**	1583	"	"	30000	75000	1.1	8300	1.4
1.4	**6100**	**3.0**	1008	**BK90G50-../DSE08XA4**	622	49400	120000	1.7	4800	3.9
1.3	**6500**	**2.8**	1127	"	"	49400	120000	1.5	5400	3.4
1.1	**8300**	**2.2**	1363	"	"	49400	120000	1.3	6800	2.7
0.9	**10100**	**1.85**	1579	"	"	49400	120000	1.1	8000	2.3
0.8	**11400**	**1.6**	1803	"	"	49400	120000	0.95	9300	2.0
0.7	**13000**	**1.4**	2016	"	"	49400	120000	0.85	10400	1.8
0.55	**16900**	**1.1**	2764	"	"	49400	120000	0.65	14000	1.3

P = 1.5 kW

50 Hz			i	Type	m	F_{RN}	F_{RV}	60 Hz		
n_2	M_2	f_B						n_2	M_2	f_B
1/min	Nm				kg	N	N	1/min	Nm	
320	**41**	**2.3**	4.44	**BK10-../DSE09LA4**	36	1890	-	390	33.5	2.8
240	**54**	**1.95**	6.02	"	"	2100	-	285	46	2.3
185	**71**	**1.6**	7.68	"	"	2400	-	225	58	2.0
152	**86**	**1.35**	9.40	"	"	2700	-	182	72	1.6
133	**96**	**1.9**	10.70	"	"	3500	-	160	80	2.3
120	**109**	**1.05**	11.93	"	"	3100	-	144	91	1.25
98	**131**	**1.55**	14.50	"	"	3900	-	118	109	1.85
84	**153**	**0.89**	16.92	"	"	3700	-	102	126	1.1
77	**167**	**1.2**	18.52	"	"	4300	-	93	138	1.45
63	**200**	**1.0**	22.65	"	"	4650	-	76	169	1.2
180	**73**	**3.2**	7.91	**BK20-../DSE09LA4**	46	1330	7600	220	59	3.9
144	**91**	**2.5**	9.91	"	"	1910	8300	173	76	3.0
128	**100**	**3.0**	11.14	"	"	3300	8100	154	83	3.6
122	**108**	**2.1**	11.69	"	"	2400	8800	147	89	2.6
97	**132**	**2.5**	14.75	"	"	3650	9000	116	111	3.0
82	**158**	**1.45**	17.42	"	"	3250	9000	99	131	1.75
74	**174**	**1.9**	19.39	"	"	4050	9000	89	144	2.3
59	**215**	**1.55**	24.29	"	"	4500	9000	71	181	1.8
50	**255**	**1.3**	28.66	"	"	4850	9000	60	210	1.55
39	**330**	**1.0**	36.69	"	"	5400	9000	47	270	1.2
33.5	**380**	**0.87**	42.70	"	"	5800	9000	40.5	315	1.05
120	**109**	**2.9**	11.93	**BK30-../DSE09LA4**	52	3650	12000	144	91	3.5
102	**127**	**2.5**	13.98	"	"	4050	12000	123	105	3.0
80	**161**	**2.8**	17.95	"	"	5300	12000	96	134	3.4
69	**188**	**1.7**	20.85	"	"	5000	12000	83	157	2.0
62	**205**	**2.2**	23.20	"	"	5900	12000	74	174	2.6
49.5	**260**	**1.75**	28.76	"	"	6500	12000	60	210	2.1
42.5	**300**	**1.5**	33.70	"	"	7000	12000	51	250	1.8
33.5	**380**	**1.2**	42.89	"	"	7800	12000	40	315	1.45
28.5	**440**	**1.0**	50.27	"	"	8300	12000	34.5	365	1.25
24	**520**	**0.87**	59.27	"	"	8900	12000	29	430	1.05

P = 1.5 kW

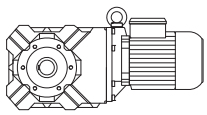

50 Hz			i	Type	m	F_{RN}	F_{RV}	60 Hz		
n_2	M_2	f_B						n_2	M_2	f_B
1/min	Nm				kg	N	N	1/min	Nm	
50	**255**	**3.1**	28.59	**BK40-../DSE09LA4**	72	6300	17000	60	210	3.7
41.5	**310**	**2.5**	34.61	"	"	6900	17000	49.5	260	3.0
35	**365**	**2.1**	40.88	"	"	7600	17000	42	305	2.6
28	**450**	**1.75**	51.18	"	"	8400	17000	33.5	375	2.1
24	**520**	**1.5**	59.66	"	"	9100	17000	29	430	1.8
20.5	**600**	**1.3**	70.11	"	"	9800	17000	24.5	500	1.55
17	**730**	**1.05**	84.36	"	"	10700	17000	20.5	600	1.3
14	**860**	**0.91**	104.0	"	"	11700	17000	16.5	730	1.05
12.5	**970**	**0.8**	118.2	**BK40Z-../DSE09LA4**	76	11700	17000	14.5	830	0.94
40.5	**315**	**3.3**	35.21	**BK50-../DSE09LA4**	100	8700	23100	49	260	4.0
30	**420**	**2.5**	47.50	"	"	10100	25700	36	350	3.0
23.5	**530**	**2.0**	60.76	"	"	11400	26000	28.5	440	2.4
19	**650**	**1.6**	75.40	"	"	12600	26000	23	540	1.95
15	**820**	**1.3**	95.29	"	"	14100	26000	18	680	1.55
12.5	**970**	**1.1**	115.4	**BK50Z-../DSE09LA4**	105	14100	26000	15	810	1.3
9.3	**1270**	**0.83**	153.3	"	"	14100	26000	11.5	1030	1.0
18.5	**770**	**3.0**	78.13	**BK60-../DSE09LA4**	109	11900	34000	22	650	3.5
16.5	**860**	**2.7**	87.41	"	"	12900	34000	20	710	3.2
14.5	**980**	**2.3**	101.2	"	"	13900	34000	17	840	2.7
13	**1100**	**2.1**	113.2	"	"	15000	34000	15.5	920	2.5
12	**1190**	**1.95**	122.5	"	"	15500	34000	14	1020	2.3
10.5	**1360**	**1.7**	137.0	"	"	16600	34000	12.5	1140	2.0
9.3	**1540**	**1.5**	153.7	**BK60Z-../DSE09LA4**	128	16600	34000	11.5	1240	1.85
7.8	**1830**	**1.25**	183.2	"	"	16600	34000	9.4	1520	1.5
7.0	**2000**	**1.15**	205.0	"	"	16600	34000	8.4	1700	1.35
6.0	**2350**	**0.98**	239.7	"	"	16600	34000	7.2	1980	1.15
5.3	**2700**	**0.85**	268.2	"	"	16600	34000	6.4	2200	1.05
8.1	**1760**	**3.0**	175.7	**BK70-../DSE09LA4**	195	24100	50000	9.8	1460	3.6
7.5	**1910**	**2.7**	190.4	**BK70Z-../DSE09LA4**	216	24100	50000	9.0	1590	3.3
6.3	**2250**	**2.3**	226.2	"	"	24100	50000	7.6	1880	2.8
5.6	**2550**	**2.0**	257.3	"	"	24100	50000	6.7	2100	2.5
4.9	**2900**	**1.8**	293.3	"	"	24100	50000	5.9	2400	2.2
4.3	**3300**	**1.6**	333.6	"	"	24100	50000	5.2	2750	1.9
3.8	**3750**	**1.4**	379.9	"	"	24100	50000	4.6	3100	1.7
3.3	**4300**	**1.2**	432.1	"	"	24100	50000	4.0	3550	1.45
2.9	**4900**	**1.05**	501.8	"	"	24100	50000	3.5	4050	1.3
2.5	**5700**	**0.91**	570.8	"	"	24100	50000	3.0	4750	1.1
2.3	**6200**	**0.84**	644.9	"	"	24100	50000	2.7	5300	0.98
3.7	**3850**	**3.0**	389.0	**BK80Z-../DSE09LA4**	345	30000	75000	4.4	3250	3.5
3.3	**4300**	**2.7**	435.7	"	"	30000	75000	4.0	3550	3.2
2.9	**4900**	**2.3**	499.5	"	"	30000	75000	3.5	4050	2.8
2.6	**5500**	**2.1**	559.5	"	"	30000	75000	3.1	4600	2.5
2.4	**5200**	**2.2**	607.8	**BK80G40-../DSE09LA4**	356	30000	75000	2.9	4150	2.8
2.1	**5900**	**1.95**	680.9	"	"	30000	75000	2.6	4650	2.5
1.9	**6700**	**1.7**	756.3	"	"	30000	75000	2.3	5400	2.1
1.7	**7500**	**1.55**	847.2	"	"	30000	75000	2.1	5900	1.95
1.5	**8600**	**1.35**	963.0	"	"	30000	75000	1.8	7000	1.65
1.4	**9200**	**1.25**	1079	"	"	30000	75000	1.6	7900	1.45
1.1	**12000**	**0.96**	1307	"	"	30000	75000	1.4	9200	1.25
1.0	**13100**	**0.88**	1425	"	"	30000	75000	1.2	10700	1.05
2.3	**6200**	**3.0**	637.7	**BK90Z-../DSE09LA4**	618	49400	120000	2.7	5300	3.5
2.0	**7100**	**2.6**	713.5	"	"	49400	120000	2.4	5900	3.1
1.8	**6600**	**2.8**	821.0	**BK90G50-../DSE09LA4**	629	49400	120000	2.1	5400	3.4
1.7	**7200**	**2.6**	882.3	"	"	49400	120000	2.0	5900	3.1
1.5	**8100**	**2.3**	1008	"	"	49400	120000	1.7	7000	2.6
1.3	**9500**	**1.95**	1127	"	"	49400	120000	1.6	7400	2.5
1.1	**11800**	**1.55**	1363	"	"	49400	120000	1.3	9800	1.9
0.9	**14400**	**1.3**	1579	"	"	49400	120000	1.1	11500	1.6
0.8	**16100**	**1.15**	1803	"	"	49400	120000	0.95	13300	1.4
0.75	**17100**	**1.1**	2016	"	"	49400	120000	0.85	14900	1.25

P = 2.2 kW

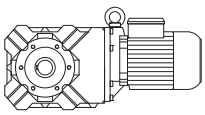

50 Hz			i	Type	m	F_{RN}	F_{RV}	60 Hz		
n_2	M_2	f_B						n_2	M_2	f_B
1/min	Nm				kg	N	N	1/min	Nm	
320	**60**	**1.6**	4.44	**BK10-../DSE09XA4**	40	1890	-	390	49.5	1.9
240	**80**	**1.3**	6.02	"	"	2100	-	285	67	1.55
185	**104**	**1.1**	7.68	"	"	2400	-	225	85	1.35
152	**127**	**0.91**	9.40	"	"	2700	-	182	106	1.1
133	**142**	**1.25**	10.70	"	"	3500	-	160	118	1.55
98	**192**	**1.05**	14.50	"	"	3900	-	118	160	1.25
77	**245**	**0.82**	18.52	"	"	4300	-	93	200	1.0
315	**61**	**3.2**	4.54	**BK20-../DSE09XA4**	50	520	6100	380	50	3.9
240	**80**	**2.7**	6.02	"	"	580	6800	285	67	3.3
180	**107**	**2.2**	7.91	"	"	1330	7600	220	87	2.7
144	**134**	**1.7**	9.91	"	"	1910	8300	173	111	2.1
128	**147**	**2.0**	11.14	"	"	3300	8100	154	122	2.5
122	**158**	**1.45**	11.69	"	"	2400	8800	147	131	1.75
97	**194**	**1.7**	14.75	"	"	3650	9000	116	163	2.0
82	**230**	**1.0**	17.42	"	"	3250	9000	99	193	1.2
74	**255**	**1.3**	19.39	"	"	4050	9000	89	210	1.55
59	**320**	**1.05**	24.29	"	"	4500	9000	71	265	1.25
50	**375**	**0.88**	28.66	"	"	4850	9000	60	315	1.05
305	**63**	**3.1**	4.73	**BK30-../DSE09XA4**	56	1550	8800	365	52	3.7
240	**80**	**2.7**	6.02	"	"	1690	9600	285	67	3.2
191	**101**	**2.7**	7.45	"	"	2200	10400	230	84	3.2
148	**130**	**2.5**	9.63	"	"	3150	11500	178	108	3.0
125	**151**	**2.7**	11.39	"	"	4150	11000	151	125	3.3
120	**161**	**2.0**	11.93	"	"	3650	12000	144	134	2.4
102	**187**	**1.7**	13.98	"	"	4050	12000	123	155	2.1
98	**192**	**2.3**	14.50	"	"	4900	12000	118	160	2.8
80	**235**	**1.9**	17.95	"	"	5300	12000	96	196	2.3
69	**275**	**1.15**	20.85	"	"	5000	12000	83	230	1.4
62	**300**	**1.5**	23.20	"	"	5900	12000	74	255	1.75
49.5	**380**	**1.2**	28.76	"	"	6500	12000	60	315	1.45
42.5	**440**	**1.0**	33.70	"	"	7000	12000	51	370	1.2
33.5	**550**	**0.82**	42.89	"	"	7800	12000	40	465	0.97
120	**161**	**3.1**	11.86	**BK40-../DSE09XA4**	76	1770	12200	145	133	3.7
79	**235**	**3.3**	18.05	"	"	4900	15300	95	199	3.9
64	**295**	**2.6**	22.44	"	"	5500	16500	77	245	3.2
50	**375**	**2.1**	28.59	"	"	6300	17000	60	315	2.5
41.5	**455**	**1.7**	34.61	"	"	6900	17000	49.5	380	2.1
35	**540**	**1.45**	40.88	"	"	7600	17000	42	450	1.75
28	**660**	**1.2**	51.18	"	"	8400	17000	33.5	550	1.4
24	**770**	**1.0**	59.66	"	"	9100	17000	29	630	1.25
20.5	**890**	**0.88**	70.11	"	"	9800	17000	24.5	740	1.05
80	**235**	**3.1**	17.92	**BK50-../DSE09XA4**	104	4600	16800	96	199	3.6
54	**350**	**3.0**	26.51	"	"	7800	21200	65	290	3.6
40.5	**465**	**2.3**	35.21	"	"	8700	23100	49	385	2.7
30	**620**	**1.7**	47.50	"	"	10100	25700	36	510	2.1
23.5	**780**	**1.35**	60.76	"	"	11400	26000	28.5	640	1.65
19	**960**	**1.1**	75.40	"	"	12600	26000	23	790	1.35
15	**1200**	**0.88**	95.29	"	"	14100	26000	18	1000	1.05
28.5	**730**	**3.2**	50.40	**BK60-../DSE09XA4**	113	9100	29800	34	610	3.8
24.5	**850**	**2.7**	58.95	"	"	9900	31500	29.5	710	3.2
22	**950**	**2.4**	65.95	"	"	10900	33000	26	800	2.9
18.5	**1130**	**2.0**	78.13	"	"	11900	34000	22	950	2.4
16.5	**1270**	**1.8**	87.41	"	"	12900	34000	20	1050	2.2
14.5	**1440**	**1.6**	101.2	"	"	13900	34000	17	1230	1.85
13	**1610**	**1.45**	113.2	"	"	15000	34000	15.5	1350	1.7
12	**1750**	**1.3**	122.5	"	"	15500	34000	14	1500	1.55
10.5	**2000**	**1.15**	137.0	"	"	16600	34000	12.5	1680	1.35
9.3	**2250**	**1.0**	153.7	**BK60Z-../DSE09XA4**	132	16600	34000	11.5	1820	1.25
7.8	**2650**	**0.87**	183.2	"	"	16600	34000	9.4	2200	1.05
12	**1750**	**3.0**	120.2	**BK70-../DSE09XA4**	199	18600	50000	14.5	1440	3.6
10.5	**2000**	**2.6**	136.7	"	"	20700	50000	13	1610	3.2

P = 2.2 kW

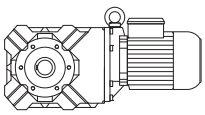

50 Hz			i	Type	m	F_{RN}	F_{RV}	60 Hz		
n_2	M_2	f_B						n_2	M_2	f_B
1/min	Nm				kg	N	N	1/min	Nm	
9.2	**2250**	**2.3**	154.4	**BK70-../DSE09XA4**	"	21900	50000	11.5	1820	2.9
8.1	**2550**	**2.0**	175.7	"	"	24100	50000	9.8	2100	2.5
7.5	**2800**	**1.85**	190.4	**BK70Z-../DSE09XA4**	220	24100	50000	9.0	2300	2.3
6.3	**3300**	**1.6**	226.2	"	"	24100	50000	7.6	2750	1.9
5.6	**3750**	**1.4**	257.3	"	"	24100	50000	6.7	3100	1.7
4.9	**4250**	**1.2**	293.3	"	"	24100	50000	5.9	3550	1.45
4.3	**4850**	**1.05**	333.6	"	"	24100	50000	5.2	4000	1.3
3.8	**5500**	**0.95**	379.9	"	"	24100	50000	4.6	4550	1.15
3.3	**6300**	**0.83**	432.1	"	"	24100	50000	4.0	5200	1.0
5.7	**3650**	**3.2**	253.3	**BK80Z-../DSE09XA4**	349	30000	75000	6.8	3050	3.8
4.8	**4350**	**2.6**	300.6	"	"	30000	75000	5.7	3650	3.2
4.3	**4850**	**2.4**	336.7	"	"	30000	75000	5.1	4100	2.8
3.7	**5600**	**2.1**	389.0	"	"	30000	75000	4.4	4750	2.4
3.3	**6300**	**1.85**	435.7	"	"	30000	75000	4.0	5200	2.2
2.9	**7200**	**1.6**	499.5	"	"	30000	75000	3.5	6000	1.9
2.6	**8000**	**1.45**	559.5	"	"	30000	75000	3.1	6700	1.7
2.4	**8000**	**1.45**	607.8	**BK80G40-../DSE09XA4**	360	30000	75000	2.9	6400	1.8
2.1	**9100**	**1.25**	680.9	"	"	30000	75000	2.6	7200	1.6
1.9	**10200**	**1.15**	756.3	"	"	30000	75000	2.3	8300	1.4
1.7	**11400**	**1.0**	847.2	"	"	30000	75000	2.1	9000	1.3
1.5	**13100**	**0.88**	963.0	"	"	30000	75000	1.8	10700	1.05
1.4	**13900**	**0.83**	1079	"	"	30000	75000	1.6	12100	0.95
3.7	**5600**	**3.3**	389.1	**BK90Z-../DSE09XA4**	622	49400	120000	4.4	4750	3.9
3.3	**6300**	**2.9**	435.3	"	"	49400	120000	4.0	5200	3.6
2.9	**7200**	**2.6**	499.2	"	"	49400	120000	3.5	6000	3.1
2.6	**8000**	**2.3**	558.5	"	"	49400	120000	3.1	6700	2.8
2.3	**9100**	**2.0**	637.7	"	"	49400	120000	2.7	7700	2.4
2.0	**10500**	**1.75**	713.5	"	"	49400	120000	2.4	8700	2.1
1.8	**10300**	**1.8**	821.0	**BK90G50-../DSE09XA4**	633	49400	120000	2.1	8600	2.2
1.7	**11100**	**1.65**	882.3	"	"	49400	120000	2.0	9300	2.0
1.5	**12600**	**1.45**	1008	"	"	49400	120000	1.7	11000	1.7
1.3	**14600**	**1.25**	1127	"	"	49400	120000	1.6	11600	1.6
1.1	**17800**	**1.05**	1363	"	"	49400	120000	1.3	14900	1.25

P = 3 kW

50 Hz			i	Type	m	F_{RN}	F_{RV}	60 Hz		
n_2	M_2	f_B						n_2	M_2	f_B
1/min	Nm				kg	N	N	1/min	Nm	
305	**86**	**2.3**	4.73	**BK30-../DSE11SA4**	59	1550	8800	365	72	2.7
240	**109**	**1.95**	6.02	"	"	1690	9600	285	92	2.3
191	**138**	**1.95**	7.45	"	"	2200	10400	230	114	2.4
148	**178**	**1.8**	9.63	"	"	3150	11500	178	148	2.2
125	**205**	**2.0**	11.39	"	"	4150	11000	151	170	2.4
120	**215**	**1.5**	11.93	"	"	3650	12000	144	183	1.75
102	**255**	**1.25**	13.98	"	"	4050	12000	123	210	1.5
98	**260**	**1.75**	14.50	"	"	4900	12000	118	215	2.1
80	**320**	**1.4**	17.95	"	"	5300	12000	96	265	1.7
62	**415**	**1.1**	23.20	"	"	5900	12000	74	345	1.3
49.5	**520**	**0.87**	28.76	"	"	6500	12000	60	425	1.05
153	**172**	**2.9**	9.31	**BK40-../DSE11SA4**	84	1040	11200	184	143	3.4
120	**215**	**2.3**	11.86	"	"	1770	12200	145	181	2.7
98	**260**	**3.0**	14.50	"	"	4500	14300	118	215	3.6
79	**325**	**2.4**	18.05	"	"	4900	15300	95	270	2.9
64	**400**	**1.95**	22.44	"	"	5500	16500	77	330	2.4
50	**510**	**1.55**	28.59	"	"	6300	17000	60	425	1.85
41.5	**620**	**1.25**	34.61	"	"	6900	17000	49.5	520	1.5
35	**730**	**1.05**	40.88	"	"	7600	17000	42	610	1.3
80	**325**	**2.2**	17.92	**BK50-../DSE11SA4**	114	4600	16800	96	270	2.7
74	**345**	**3.0**	19.33	"	"	6900	19200	89	285	3.7
54	**475**	**2.2**	26.51	"	"	7800	21200	65	395	2.7
40.5	**630**	**1.65**	35.21	"	"	8700	23100	49	520	2.0

BK-series bevel geared motors

Selection - bevel geared motors DSE -IE1

P = 3 kW

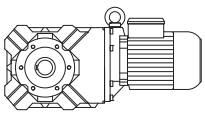

50 Hz			i	Type	m	F_{RN}	F_{RV}	60 Hz		
n_2	M_2	f_B						n_2	M_2	f_B
1/min	Nm				kg	N	N	1/min	Nm	
30	**840**	**1.25**	47.50	**BK50-../DSE11SA4**	"	10100	25700	36	700	1.5
23.5	**1070**	**0.98**	60.76	"	"	11400	26000	28.5	880	1.2
19	**1310**	**0.8**	75.40	"	"	12600	26000	23	1080	0.97
38	**750**	**3.1**	37.80	**BK60-../DSE11SA4**	124	7300	26500	45.5	620	3.7
32	**890**	**2.6**	45.05	"	"	8200	28300	38	750	3.1
28.5	**1000**	**2.3**	50.40	"	"	9100	29800	34	840	2.7
24.5	**1160**	**2.0**	58.95	"	"	9900	31500	29.5	970	2.4
22	**1300**	**1.75**	65.95	"	"	10900	33000	26	1100	2.1
18.5	**1540**	**1.5**	78.13	"	"	11900	34000	22	1300	1.75
16.5	**1730**	**1.35**	87.41	"	"	12900	34000	20	1430	1.6
14.5	**1970**	**1.15**	101.2	"	"	13900	34000	17	1680	1.35
13	**2200**	**1.05**	113.2	"	"	15000	34000	15.5	1840	1.25
12	**2350**	**0.98**	122.5	"	"	15500	34000	14	2000	1.15
10.5	**2700**	**0.85**	137.0	"	"	16600	34000	12.5	2250	1.0
18	**1590**	**3.3**	79.89	**BK70-../DSE11SA4**	203	14300	47600	21.5	1330	3.9
16	**1790**	**2.9**	90.96	"	"	15300	49900	19	1500	3.5
14	**2000**	**2.6**	103.5	"	"	17200	50000	17	1680	3.1
12	**2350**	**2.2**	120.2	"	"	18600	50000	14.5	1970	2.6
10.5	**2700**	**1.95**	136.7	"	"	20700	50000	13	2200	2.4
9.2	**3100**	**1.7**	154.4	"	"	21900	50000	11.5	2450	2.1
8.1	**3500**	**1.5**	175.7	"	"	24100	50000	9.8	2900	1.8
7.5	**3800**	**1.35**	190.4	**BK70Z-../DSE11SA4**	230	24100	50000	9.0	3150	1.65
6.3	**4500**	**1.15**	226.2	"	"	24100	50000	7.6	3750	1.4
5.6	**5100**	**1.0**	257.3	"	"	24100	50000	6.7	4250	1.2
4.9	**5800**	**0.9**	293.3	"	"	24100	50000	5.9	4850	1.05
8.3	**3450**	**3.0**	171.5	**BK80-../DSE11SA4**	318	30000	75000	10	2850	3.7
8.0	**3550**	**3.2**	177.6	**BK80Z-../DSE11SA4**	360	30000	75000	9.7	2950	3.9
7.2	**3950**	**2.9**	198.9	"	"	30000	75000	8.6	3300	3.5
6.3	**4500**	**2.6**	226.1	"	"	30000	75000	7.6	3750	3.1
5.7	**5000**	**2.3**	253.3	"	"	30000	75000	6.8	4200	2.7
4.8	**5900**	**1.95**	300.6	"	"	30000	75000	5.7	5000	2.3
4.3	**6600**	**1.75**	336.7	"	"	30000	75000	5.1	5600	2.1
3.7	**7700**	**1.5**	389.0	"	"	30000	75000	4.4	6500	1.75
3.3	**8600**	**1.35**	435.7	"	"	30000	75000	4.0	7100	1.6
2.9	**9800**	**1.15**	499.5	"	"	30000	75000	3.5	8100	1.4
2.6	**11000**	**1.05**	559.5	"	"	30000	75000	3.1	9200	1.25
2.4	**11100**	**1.05**	607.8	**BK80G40-../DSE11SA4**	368	30000	75000	2.9	9100	1.25
2.1	**12800**	**0.9**	680.9	"	"	30000	75000	2.6	10100	1.15
1.9	**14200**	**0.81**	756.3	"	"	30000	75000	2.3	11600	0.99
4.9	**5800**	**3.2**	295.6	**BK90Z-../DSE11SA4**	626	49400	120000	5.8	4900	3.8
4.3	**6600**	**2.8**	330.7	"	"	49400	120000	5.2	5500	3.4
3.7	**7700**	**2.4**	389.1	"	"	49400	120000	4.4	6500	2.8
3.3	**8600**	**2.2**	435.3	"	"	49400	120000	4.0	7100	2.6
2.9	**9800**	**1.9**	499.2	"	"	49400	120000	3.5	8100	2.3
2.6	**11000**	**1.7**	558.5	"	"	49400	120000	3.1	9200	2.0
2.3	**12400**	**1.5**	637.7	"	"	49400	120000	2.7	10600	1.75
2.0	**14300**	**1.3**	713.5	"	"	49400	120000	2.4	11900	1.55
1.8	**14500**	**1.3**	821.0	**BK90G50-../DSE11SA4**	642	49400	120000	2.1	12300	1.5
1.7	**15600**	**1.2**	882.3	"	"	49400	120000	2.0	13100	1.4
1.5	**17700**	**1.05**	1008	"	"	49400	120000	1.7	15500	1.2
1.3	**20500**	**0.9**	1127	"	"	49400	120000	1.6	16300	1.15

P = 4 kW

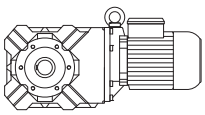

50 Hz			i	Type	m	F_{RN}	F_{RV}	60 Hz		
n_2	M_2	f_B						n_2	M_2	f_B
1/min	Nm				kg	N	N	1/min	Nm	
305	**115**	**1.7**	4.73	**BK30-../DSE11MA4**	65	1550	8800	365	96	2.0
240	**146**	**1.45**	6.02	"	"	1690	9600	285	123	1.7
191	**184**	**1.45**	7.45	"	"	2200	10400	230	152	1.75
148	**235**	**1.35**	9.63	"	"	3150	11500	178	197	1.6
125	**275**	**1.5**	11.39	"	"	4150	11000	151	225	1.85
120	**290**	**1.1**	11.93	"	"	3650	12000	144	240	1.35
102	**340**	**0.94**	13.98	"	"	4050	12000	123	280	1.15
98	**350**	**1.3**	14.50	"	"	4900	12000	118	290	1.55
80	**425**	**1.05**	17.95	"	"	5300	12000	96	355	1.25
62	**550**	**0.82**	23.20	"	"	5900	12000	74	460	0.98
240	**146**	**3.2**	6.02	**BK40-../DSE11MA4**	90	470	9800	285	123	3.9
190	**184**	**2.7**	7.49	"	"	750	10500	230	152	3.2
153	**225**	**2.2**	9.31	"	"	1040	11200	184	191	2.6
128	**265**	**2.7**	11.17	"	"	4100	13100	154	220	3.3
120	**290**	**1.7**	11.86	"	"	1770	12200	145	240	2.1
98	**350**	**2.2**	14.50	"	"	4500	14300	118	290	2.7
79	**435**	**1.8**	18.05	"	"	4900	15300	95	360	2.2
64	**530**	**1.45**	22.44	"	"	5500	16500	77	445	1.75
50	**680**	**1.15**	28.59	"	"	6300	17000	60	570	1.35
41.5	**820**	**0.95**	34.61	"	"	6900	17000	49.5	690	1.15
35	**980**	**0.8**	40.88	"	"	7600	17000	42	810	0.96
142	**245**	**3.3**	10.00	**BK50-../DSE11MA4**	120	1220	13200	171	205	4.0
102	**335**	**3.1**	13.95	"	"	6100	17400	123	275	3.8
80	**430**	**1.7**	17.92	"	"	4600	16800	96	360	2.0
74	**460**	**2.3**	19.33	"	"	6900	19200	89	385	2.7
54	**630**	**1.65**	26.51	"	"	7800	21200	65	520	2.0
40.5	**840**	**1.25**	35.21	"	"	8700	23100	49	700	1.5
30	**1130**	**0.93**	47.50	"	"	10100	25700	36	940	1.1
52	**730**	**3.2**	27.36	**BK60-../DSE11MA4**	130	5600	23200	63	600	3.8
42.5	**890**	**2.6**	33.78	"	"	6500	25200	51	740	3.1
38	**1000**	**2.3**	37.80	"	"	7300	26500	45.5	830	2.8
32	**1190**	**1.95**	45.05	"	"	8200	28300	38	1000	2.3
28.5	**1340**	**1.7**	50.40	"	"	9100	29800	34	1120	2.1
24.5	**1550**	**1.5**	58.95	"	"	9900	31500	29.5	1290	1.8
22	**1730**	**1.35**	65.95	"	"	10900	33000	26	1460	1.6
18.5	**2050**	**1.1**	78.13	"	"	11900	34000	22	1730	1.35
16.5	**2300**	**1.0**	87.41	"	"	12900	34000	20	1910	1.2
14.5	**2600**	**0.88**	101.2	"	"	13900	34000	17	2200	1.05
23.5	**1620**	**3.2**	61.60	**BK70-../DSE11MA4**	209	11500	42800	28	1360	3.8
20.5	**1860**	**2.8**	70.23	"	"	12500	44800	24.5	1550	3.4
18	**2100**	**2.5**	79.89	"	"	14300	47600	21.5	1770	2.9
16	**2350**	**2.2**	90.96	"	"	15300	49900	19	2000	2.6
14	**2700**	**1.95**	103.5	"	"	17200	50000	17	2200	2.4
12	**3150**	**1.65**	120.2	"	"	18600	50000	14.5	2600	2.0
10.5	**3600**	**1.45**	136.7	"	"	20700	50000	13	2900	1.8
9.2	**4150**	**1.25**	154.4	"	"	21900	50000	11.5	3300	1.6
8.1	**4700**	**1.1**	175.7	"	"	24100	50000	9.8	3850	1.35
7.5	**5000**	**1.05**	190.4	**BK70Z-../DSE11MA4**	236	24100	50000	9.0	4200	1.25
6.3	**6000**	**0.87**	226.2	"	"	24100	50000	7.6	5000	1.05
11	**3450**	**3.0**	131.6	**BK80-../DSE11MA4**	324	24900	75000	13	2900	3.6
9.3	**4100**	**2.6**	153.1	"	"	27200	75000	11.5	3300	3.2
8.3	**4600**	**2.3**	171.5	"	"	30000	75000	10	3800	2.8
8.0	**4750**	**2.4**	177.6	**BK80Z-../DSE11MA4**	366	30000	75000	9.7	3900	2.9
7.2	**5300**	**2.2**	198.9	"	"	30000	75000	8.6	4400	2.6
6.3	**6000**	**1.9**	226.1	"	"	30000	75000	7.6	5000	2.3
5.7	**6700**	**1.7**	253.3	"	"	30000	75000	6.8	5600	2.1
4.8	**7900**	**1.45**	300.6	"	"	30000	75000	5.7	6700	1.7
4.3	**8800**	**1.3**	336.7	"	"	30000	75000	5.1	7400	1.55
3.7	**10300**	**1.1**	389.0	"	"	30000	75000	4.4	8600	1.35
3.3	**11500**	**1.0**	435.7	"	"	30000	75000	4.0	9500	1.2
2.9	**13100**	**0.88**	499.5	"	"	30000	75000	3.5	10900	1.05

P = 4 kW

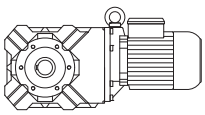

50 Hz			i	Type	m	F_{RN}	F_{RV}	60 Hz		
n_2	M_2	f_B						n_2	M_2	f_B
1/min	Nm				kg	N	N	1/min	Nm	
6.1	**6200**	**3.0**	234.6	**BK90Z-../DSE11MA4**	632	49400	120000	7.3	5200	3.6
5.5	**6900**	**2.7**	262.5	"	"	49400	120000	6.6	5700	3.2
4.9	**7700**	**2.4**	295.6	"	"	49400	120000	5.8	6500	2.8
4.3	**8800**	**2.1**	330.7	"	"	49400	120000	5.2	7300	2.5
3.7	**10300**	**1.8**	389.1	"	"	49400	120000	4.4	8600	2.2
3.3	**11500**	**1.6**	435.3	"	"	49400	120000	4.0	9500	1.95
2.9	**13100**	**1.4**	499.2	"	"	49400	120000	3.5	10900	1.7
2.6	**14600**	**1.25**	558.5	"	"	49400	120000	3.1	12300	1.5
2.3	**16600**	**1.1**	637.7	"	"	49400	120000	2.7	14100	1.3
2.0	**19100**	**0.97**	713.5	"	"	49400	120000	2.4	15900	1.15
1.8	**19800**	**0.93**	821.0	**BK90G50-../DSE11MA4**	648	49400	120000	2.1	16800	1.1
1.7	**21200**	**0.87**	882.3	"	"	49400	120000	2.0	17900	1.05

P = 5.5 kW

50 Hz			i	Type	m	F_{RN}	F_{RV}	60 Hz		
n_2	M_2	f_B						n_2	M_2	f_B
1/min	Nm				kg	N	N	1/min	Nm	
305	**158**	**1.25**	4.73	**BK30-../DSE11LA4**	76	1550	8800	365	132	1.45
240	**200**	**1.05**	6.02	"	"	1690	9600	285	169	1.25
191	**250**	**1.05**	7.45	"	"	2200	10400	230	210	1.3
148	**325**	**0.98**	9.63	"	"	3150	11500	178	270	1.2
125	**375**	**1.1**	11.39	"	"	4150	11000	151	310	1.35
120	**400**	**0.8**	11.93	"	"	3650	12000	144	335	0.96
98	**480**	**0.94**	14.50	"	"	4900	12000	118	400	1.15
310	**155**	**2.8**	4.63	**BK40-../DSE11LA4**	102	430	8900	370	130	3.3
240	**200**	**2.4**	6.02	"	"	470	9800	285	169	2.8
190	**250**	**1.95**	7.49	"	"	750	10500	230	210	2.3
153	**315**	**1.55**	9.31	"	"	1040	11200	184	260	1.9
128	**365**	**1.95**	11.17	"	"	4100	13100	154	305	2.3
120	**400**	**1.25**	11.86	"	"	1770	12200	145	330	1.5
98	**480**	**1.65**	14.50	"	"	4500	14300	118	400	1.95
79	**590**	**1.3**	18.05	"	"	4900	15300	95	495	1.6
64	**730**	**1.05**	22.44	"	"	5500	16500	77	610	1.3
50	**940**	**0.83**	28.59	"	"	6300	17000	60	780	1.0
195	**245**	**3.3**	7.29	**BK50-../DSE11LA4**	132	620	11900	235	205	4.0
146	**320**	**2.9**	9.73	"	"	5400	15400	176	265	3.5
142	**340**	**2.4**	10.00	"	"	1220	13200	171	280	2.9
102	**460**	**2.3**	13.95	"	"	6100	17400	123	380	2.8
80	**590**	**1.25**	17.92	"	"	4600	16800	96	495	1.45
74	**630**	**1.65**	19.33	"	"	6900	19200	89	530	2.0
54	**870**	**1.2**	26.51	"	"	7800	21200	65	720	1.45
40.5	**1160**	**0.91**	35.21	"	"	8700	23100	49	960	1.1
78	**670**	**3.3**	18.36	**BK60-../DSE11LA4**	142	4000	19900	94	550	4.0
70	**750**	**3.0**	20.54	"	"	4400	20600	84	620	3.6
59	**890**	**2.6**	24.45	"	"	4850	22000	70	750	3.1
52	**1010**	**2.3**	27.36	"	"	5600	23200	63	830	2.8
42.5	**1230**	**1.85**	33.78	"	"	6500	25200	51	1020	2.3
38	**1380**	**1.65**	37.80	"	"	7300	26500	45.5	1150	2.0
32	**1640**	**1.4**	45.05	"	"	8200	28300	38	1380	1.65
28.5	**1840**	**1.25**	50.40	"	"	9100	29800	34	1540	1.5
24.5	**2100**	**1.1**	58.95	"	"	9900	31500	29.5	1780	1.3
22	**2350**	**0.98**	65.95	"	"	10900	33000	26	2000	1.15
18.5	**2800**	**0.82**	78.13	"	"	11900	34000	22	2350	0.98
35.5	**1470**	**3.3**	40.08	**BK70-../DSE11LA4**	221	8300	36300	43	1220	4.0
31.5	**1660**	**3.1**	45.59	"	"	9000	37900	38	1380	3.7
26.5	**1980**	**2.6**	54.15	"	"	9900	40200	32	1640	3.2
23.5	**2200**	**2.4**	61.60	"	"	11500	42800	28	1870	2.8
20.5	**2550**	**2.0**	70.23	"	"	12500	44800	24.5	2100	2.5
18	**2900**	**1.8**	79.89	"	"	14300	47600	21.5	2400	2.2

P = 5.5 kW

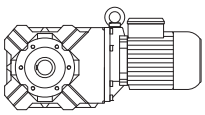

50 Hz			i	Type	m	F_{RN}	F_{RV}	60 Hz		
n_2	M_2	f_B						n_2	M_2	f_B
1/min	Nm				kg	N	N	1/min	Nm	
16	**3250**	**1.6**	90.96	**BK70-../DSE11LA4**	"	15300	49900	19	2750	1.9
14	**3750**	**1.4**	103.5	"	"	17200	50000	17	3050	1.7
12	**4350**	**1.2**	120.2	"	"	18600	50000	14.5	3600	1.45
10.5	**5000**	**1.05**	136.7	"	"	20700	50000	13	4000	1.3
9.2	**5700**	**0.91**	154.4	"	"	21900	50000	11.5	4550	1.15
8.1	**6400**	**0.81**	175.7	"	"	24100	50000	9.8	5300	0.98
16	**3250**	**3.2**	91.53	**BK80-../DSE11LA4**	336	18300	74200	19	2750	3.8
14	**3750**	**2.8**	102.5	"	"	20500	75000	17	3050	3.4
12.5	**4200**	**2.5**	117.5	"	"	22300	75000	15	3500	3.0
11	**4750**	**2.2**	131.6	"	"	24900	75000	13	4000	2.6
9.3	**5600**	**1.9**	153.1	"	"	27200	75000	11.5	4550	2.3
8.3	**6300**	**1.65**	171.5	"	"	30000	75000	10	5200	2.0
8.0	**6500**	**1.75**	177.6	**BK80Z-../DSE11LA4**	378	30000	75000	9.7	5400	2.1
7.2	**7200**	**1.6**	198.9	"	"	30000	75000	8.6	6100	1.9
6.3	**8300**	**1.4**	226.1	"	"	30000	75000	7.6	6900	1.65
5.7	**9200**	**1.25**	253.3	"	"	30000	75000	6.8	7700	1.5
4.8	**10900**	**1.05**	300.6	"	"	30000	75000	5.7	9200	1.25
4.3	**12200**	**0.94**	336.7	"	"	30000	75000	5.1	10200	1.15
3.7	**14100**	**0.82**	389.0	"	"	30000	75000	4.4	11900	0.97
8.2	**6400**	**2.9**	174.7	**BK90Z-../DSE11LA4**	643	49400	120000	9.8	5300	3.5
7.3	**7100**	**2.6**	195.4	"	"	49400	120000	8.8	5900	3.1
6.1	**8600**	**2.2**	234.6	"	"	49400	120000	7.3	7100	2.6
5.5	**9500**	**1.95**	262.5	"	"	49400	120000	6.6	7900	2.3
4.9	**10700**	**1.75**	295.6	"	"	49400	120000	5.8	9000	2.1
4.3	**12200**	**1.5**	330.7	"	"	49400	120000	5.2	10100	1.85
3.7	**14100**	**1.3**	389.1	"	"	49400	120000	4.4	11900	1.55
3.3	**15900**	**1.15**	435.3	"	"	49400	120000	4.0	13100	1.4
2.9	**18100**	**1.0**	499.2	"	"	49400	120000	3.5	15000	1.25
2.6	**20200**	**0.92**	558.5	"	"	49400	120000	3.1	16900	1.1
2.3	**22800**	**0.81**	637.7	"	"	49400	120000	2.7	19400	0.95

P = 7.5 kW

50 Hz			i	Type	m	F_{RN}	F_{RV}	60 Hz		
n_2	M_2	f_B						n_2	M_2	f_B
1/min	Nm				kg	N	N	1/min	Nm	
395	**166**	**4.3**	3.67	**BK50-../DSE13MA4**	143	115	9400	475	138	5.2
275	**235**	**3.5**	5.26	"	"	130	10700	335	196	4.1
198	**330**	**2.5**	7.29	"	"	620	11900	240	270	3.0
148	**435**	**2.1**	9.73	"	"	5400	15400	179	360	2.6
144	**455**	**1.8**	10.00	"	"	1220	13200	174	375	2.2
104	**610**	**1.7**	13.95	"	"	6100	17400	125	510	2.1
81	**800**	**0.91**	17.92	"	"	4600	16800	98	660	1.1
75	**850**	**1.25**	19.33	"	"	6900	19200	91	700	1.5
55	**1170**	**0.9**	26.51	"	"	7800	21200	66	970	1.1
134	**530**	**3.2**	10.82	**BK60-../DSE13MA4**	155	3200	17000	161	440	3.8
104	**680**	**2.9**	13.85	"	"	3850	18000	126	560	3.5
100	**710**	**2.7**	14.41	"	"	3650	18600	121	590	3.3
79	**900**	**2.4**	18.36	"	"	4000	19900	95	750	2.9
71	**1000**	**2.3**	20.54	"	"	4400	20600	85	840	2.7
59	**1210**	**1.9**	24.45	"	"	4850	22000	72	990	2.3
53	**1350**	**1.7**	27.36	"	"	5600	23200	64	1110	2.1
43	**1660**	**1.4**	33.78	"	"	6500	25200	52	1370	1.7
38.5	**1860**	**1.25**	37.80	"	"	7300	26500	46.5	1540	1.5
32	**2200**	**1.05**	45.05	"	"	8200	28300	39	1830	1.25
29	**2450**	**0.94**	50.40	"	"	9100	29800	35	2000	1.15
47	**1520**	**3.0**	30.90	**BK70-../DSE13MA4**	234	7500	33600	57	1250	3.6
41	**1740**	**2.7**	35.15	"	"	8000	35000	50	1430	3.3
36	**1980**	**2.5**	40.08	"	"	8300	36300	43.5	1640	3.0
32	**2200**	**2.3**	45.59	"	"	9000	37900	38.5	1860	2.8
27	**2650**	**1.95**	54.15	"	"	9900	40200	32.5	2200	2.4

P = 7.5 kW

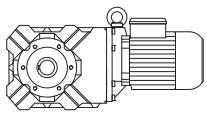

50 Hz			i	Type	m	F_{RN}	F_{RV}	60 Hz		
n_2	M_2	f_B						n_2	M_2	f_B
1/min	Nm				kg	N	N	1/min	Nm	
23.5	**3000**	**1.75**	61.60	**BK70-../DSE13MA4**	"	11500	42800	28.5	2500	2.1
21	**3400**	**1.55**	70.23	"	"	12500	44800	25	2850	1.8
18.5	**3850**	**1.35**	79.89	"	"	14300	47600	22	3250	1.6
16	**4450**	**1.15**	90.96	"	"	15300	49900	19.5	3650	1.4
14	**5100**	**1.0**	103.5	"	"	17200	50000	17	4200	1.25
12	**5900**	**0.88**	120.2	"	"	18600	50000	14.5	4900	1.05
11	**6500**	**0.8**	136.7	"	"	20700	50000	13	5500	0.95
24.5	**2900**	**3.2**	59.60	**BK80-../DSE13MA4**	348	15700	65500	29.5	2400	3.8
20.5	**3450**	**2.8**	70.72	"	"	16600	68700	25	2850	3.4
18.5	**3850**	**2.6**	79.22	"	"	17600	71300	22	3250	3.1
16	**4450**	**2.3**	91.53	"	"	18300	74200	19.5	3650	2.8
14.5	**4900**	**2.1**	102.5	"	"	20500	75000	17	4200	2.5
12.5	**5700**	**1.85**	117.5	"	"	22300	75000	15	4750	2.2
11	**6500**	**1.6**	131.6	"	"	24900	75000	13.5	5300	2.0
9.5	**7500**	**1.4**	153.1	"	"	27200	75000	11.5	6200	1.7
8.4	**8500**	**1.25**	171.5	"	"	30000	75000	10.5	6800	1.55
8.2	**8700**	**1.3**	177.6	**BK80Z-../DSE13MA4**	391	30000	75000	9.8	7300	1.6
7.3	**9800**	**1.15**	198.9	"	"	30000	75000	8.8	8100	1.4
6.4	**11100**	**1.05**	226.1	"	"	30000	75000	7.7	9300	1.25
5.7	**12500**	**0.92**	253.3	"	"	30000	75000	6.9	10300	1.1
12.5	**5700**	**2.9**	117.0	**BK90-../DSE13MA4**	600	39200	113000	15	4750	3.5
11.5	**6200**	**2.7**	130.9	"	"	42700	119400	13.5	5300	3.2
9.7	**7300**	**2.3**	149.5	"	"	45600	120000	12	5900	2.8
8.7	**8200**	**2.0**	167.2	"	"	49400	120000	10.5	6800	2.5
8.3	**8600**	**2.2**	174.7	**BK90Z-../DSE13MA4**	656	49400	120000	10	7100	2.6
7.4	**9600**	**1.95**	195.4	"	"	49400	120000	9.0	7900	2.3
6.2	**11500**	**1.6**	234.6	"	"	49400	120000	7.5	9500	1.95
5.5	**13000**	**1.4**	262.5	"	"	49400	120000	6.7	10600	1.75
4.9	**14600**	**1.25**	295.6	"	"	49400	120000	5.9	12100	1.55
4.4	**16200**	**1.15**	330.7	"	"	49400	120000	5.3	13500	1.35
3.8	**18800**	**0.98**	389.1	"	"	49400	120000	4.5	15900	1.15
3.4	**21000**	**0.88**	435.3	"	"	49400	120000	4.0	17900	1.05

P = 9.5 kW

50 Hz			i	Type	m	F_{RN}	F_{RV}	60 Hz		
n_2	M_2	f_B						n_2	M_2	f_B
1/min	Nm				kg	N	N	1/min	Nm	
395	**210**	**3.4**	3.67	**BK50-../DSE13LA4**	146	115	9400	475	175	4.1
275	**300**	**2.7**	5.26	"	"	130	10700	335	245	3.3
198	**420**	**1.95**	7.29	"	"	620	11900	240	345	2.4
148	**550**	**1.7**	9.73	"	"	5400	15400	179	455	2.0
144	**570**	**1.4**	10.00	"	"	1220	13200	174	475	1.7
104	**780**	**1.35**	13.95	"	"	6100	17400	125	650	1.6
75	**1080**	**0.97**	19.33	"	"	6900	19200	91	890	1.2
198	**455**	**3.2**	7.29	**BK60-../DSE13LA4**	158	2800	14900	240	375	3.9
134	**670**	**2.5**	10.82	"	"	3200	17000	161	560	3.0
104	**870**	**2.3**	13.85	"	"	3850	18000	126	720	2.7
100	**900**	**2.1**	14.41	"	"	3650	18600	121	740	2.6
79	**1140**	**1.9**	18.36	"	"	4000	19900	95	950	2.3
71	**1270**	**1.75**	20.54	"	"	4400	20600	85	1060	2.1
59	**1530**	**1.5**	24.45	"	"	4850	22000	72	1260	1.85
53	**1710**	**1.35**	27.36	"	"	5600	23200	64	1410	1.65
43	**2100**	**1.1**	33.78	"	"	6500	25200	52	1740	1.3
38.5	**2350**	**0.98**	37.80	"	"	7300	26500	46.5	1950	1.2
32	**2800**	**0.82**	45.05	"	"	8200	28300	39	2300	1.0
66	**1370**	**3.0**	21.88	**BK70-../DSE13LA4**	237	6500	30200	80	1130	3.6
58	**1560**	**2.7**	24.89	"	"	7000	31500	70	1290	3.3

P = 9.5 kW

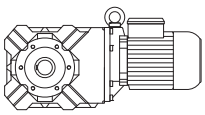

50 Hz			i	Type	m	F_{RN}	F_{RV}	60 Hz		
n_2	M_2	f_B						n_2	M_2	f_B
1/min	Nm				kg	N	N	1/min	Nm	
47	**1930**	**2.3**	30.90	**BK70-../DSE13LA4**	"	7500	33600	57	1590	2.8
41	**2200**	**2.2**	35.15	"	"	8000	35000	50	1810	2.6
36	**2500**	**1.95**	40.08	"	"	8300	36300	43.5	2050	2.4
32	**2800**	**1.85**	45.59	"	"	9000	37900	38.5	2350	2.2
27	**3350**	**1.55**	54.15	"	"	9900	40200	32.5	2750	1.9
23.5	**3850**	**1.35**	61.60	"	"	11500	42800	28.5	3150	1.65
21	**4300**	**1.2**	70.23	"	"	12500	44800	25	3600	1.45
18.5	**4900**	**1.05**	79.89	"	"	14300	47600	22	4100	1.25
16	**5600**	**0.93**	90.96	"	"	15300	49900	19.5	4650	1.1
14	**6400**	**0.81**	103.5	"	"	17200	50000	17	5300	0.98
34.5	**2600**	**3.2**	41.78	**BK80-../DSE13LA4**	351	13500	58700	42	2150	3.8
31	**2900**	**3.0**	46.80	"	"	14300	60900	37.5	2400	3.6
27.5	**3250**	**2.7**	53.21	"	"	14800	63100	33	2700	3.3
24.5	**3700**	**2.5**	59.60	"	"	15700	65500	29.5	3050	3.0
20.5	**4400**	**2.2**	70.72	"	"	16600	68700	25	3600	2.7
18.5	**4900**	**2.1**	79.22	"	"	17600	71300	22	4100	2.5
16	**5600**	**1.85**	91.53	"	"	18300	74200	19.5	4650	2.2
14.5	**6200**	**1.7**	102.5	"	"	20500	75000	17	5300	2.0
12.5	**7200**	**1.45**	117.5	"	"	22300	75000	15	6000	1.75
11	**8200**	**1.3**	131.6	"	"	24900	75000	13.5	6700	1.55
9.5	**9500**	**1.1**	153.1	"	"	27200	75000	11.5	7800	1.35
8.4	**10800**	**0.97**	171.5	"	"	30000	75000	10.5	8600	1.2
8.2	**11000**	**1.05**	177.6	**BK80Z-../DSE13LA4**	394	30000	75000	9.8	9200	1.25
7.3	**12400**	**0.93**	198.9	"	"	30000	75000	8.8	10300	1.1
6.4	**14100**	**0.82**	226.1	"	"	30000	75000	7.7	11700	0.98
16	**5600**	**3.0**	91.19	**BK90-../DSE13LA4**	603	33300	101000	19.5	4650	3.6
14.5	**6200**	**2.7**	102.0	"	"	36600	107000	17.5	5100	3.3
12.5	**7200**	**2.3**	117.0	"	"	39200	113000	15	6000	2.8
11.5	**7800**	**2.2**	130.9	"	"	42700	119400	13.5	6700	2.5
9.7	**9300**	**1.8**	149.5	"	"	45600	120000	12	7500	2.2
8.7	**10400**	**1.6**	167.2	"	"	49400	120000	10.5	8600	1.95
8.3	**10900**	**1.7**	174.7	**BK90Z-../DSE13LA4**	659	49400	120000	10	9000	2.1
7.4	**12200**	**1.5**	195.4	"	"	49400	120000	9.0	10000	1.85
6.2	**14600**	**1.25**	234.6	"	"	49400	120000	7.5	12000	1.55
5.5	**16400**	**1.15**	262.5	"	"	49400	120000	6.7	13500	1.35
4.9	**18500**	**1.0**	295.6	"	"	49400	120000	5.9	15300	1.2
4.4	**20600**	**0.9**	330.7	"	"	49400	120000	5.3	17100	1.1

P = 11 kW

50 Hz			i	Type	m	F_{RN}	F_{RV}	60 Hz		
n_2	M_2	f_B						n_2	M_2	f_B
1/min	Nm				kg	N	N	1/min	Nm	
400	**240**	**3.0**	3.67	**BK50-../DSE16MA4**	191	115	9400	480	200	3.6
280	**345**	**2.4**	5.26	"	"	130	10700	335	285	2.8
205	**470**	**1.75**	7.29	"	"	620	11900	245	390	2.1
151	**620**	**1.5**	9.73	"	"	5400	15400	181	520	1.8
146	**660**	**1.25**	10.00	"	"	1220	13200	176	540	1.5
105	**900**	**1.15**	13.95	"	"	6100	17400	127	740	1.4
76	**1240**	**0.85**	19.33	"	"	6900	19200	92	1020	1.05
205	**510**	**2.9**	7.29	**BK60-../DSE16MA4**	203	2800	14900	245	425	3.4
135	**770**	**2.2**	10.82	"	"	3200	17000	163	640	2.6
106	**990**	**2.0**	13.85	"	"	3850	18000	128	820	2.4
102	**1020**	**1.9**	14.41	"	"	3650	18600	123	850	2.3
80	**1310**	**1.65**	18.36	"	"	4000	19900	96	1090	2.0
72	**1450**	**1.55**	20.54	"	"	4400	20600	86	1220	1.85
60	**1750**	**1.3**	24.45	"	"	4850	22000	72	1450	1.6
54	**1940**	**1.2**	27.36	"	"	5600	23200	65	1610	1.45
43.5	**2400**	**0.96**	33.78	"	"	6500	25200	53	1980	1.15
39	**2650**	**0.87**	37.80	"	"	7300	26500	47	2200	1.05

P = 11 kW

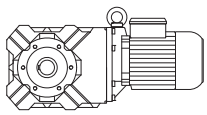

50 Hz			i	Type	m	F_{RN}	F_{RV}	60 Hz		
n_2	M_2	f_B						n_2	M_2	f_B
1/min	Nm				kg	N	N	1/min	Nm	
67	**1560**	**2.6**	21.88	**BK70-../DSE16MA4**	286	6500	30200	81	1290	3.2
59	**1780**	**2.4**	24.89	"	"	7000	31500	71	1470	2.9
47.5	**2200**	**2.1**	30.90	"	"	7500	33600	57	1840	2.5
42	**2500**	**1.9**	35.15	"	"	8000	35000	51	2050	2.3
36.5	**2850**	**1.7**	40.08	"	"	8300	36300	44	2350	2.1
32.5	**3200**	**1.6**	45.59	"	"	9000	37900	39	2650	1.95
27	**3850**	**1.35**	54.15	"	"	9900	40200	33	3150	1.65
24	**4350**	**1.2**	61.60	"	"	11500	42800	29	3600	1.45
21	**5000**	**1.05**	70.23	"	"	12500	44800	25.5	4100	1.25
18.5	**5600**	**0.93**	79.89	"	"	14300	47600	22.5	4650	1.1
16.5	**6300**	**0.83**	90.96	"	"	15300	49900	19.5	5300	0.98
43	**2400**	**3.3**	34.22	**BK80-../DSE16MA4**	396	12600	55400	52	2000	3.9
35	**3000**	**2.7**	41.78	"	"	13500	58700	42.5	2450	3.4
31.5	**3300**	**2.6**	46.80	"	"	14300	60900	38	2750	3.1
27.5	**3800**	**2.3**	53.21	"	"	14800	63100	33.5	3100	2.9
24.5	**4250**	**2.2**	59.60	"	"	15700	65500	30	3500	2.6
21	**5000**	**1.95**	70.72	"	"	16600	68700	25	4200	2.3
18.5	**5600**	**1.8**	79.22	"	"	17600	71300	22.5	4650	2.2
16	**6500**	**1.6**	91.53	"	"	18300	74200	19.5	5300	1.95
14.5	**7200**	**1.45**	102.5	"	"	20500	75000	17.5	6000	1.75
12.5	**8400**	**1.25**	117.5	"	"	22300	75000	15	7000	1.5
11.5	**9100**	**1.15**	131.6	"	"	24900	75000	13.5	7700	1.35
9.6	**10900**	**0.96**	153.1	"	"	27200	75000	11.5	9100	1.15
8.6	**12200**	**0.86**	171.5	"	"	30000	75000	10.5	10000	1.05
8.3	**12600**	**0.91**	177.6	**BK80Z-../DSE16MA4**	439	30000	75000	10	10500	1.1
7.4	**14100**	**0.82**	198.9	"	"	30000	75000	8.9	11800	0.97
19	**5500**	**3.1**	77.51	**BK90-../DSE16MA4**	649	30300	94400	23	4550	3.7
16.5	**6300**	**2.7**	91.19	"	"	33300	101000	19.5	5300	3.2
14.5	**7200**	**2.3**	102.0	"	"	36600	107000	17.5	6000	2.8
12.5	**8400**	**2.0**	117.0	"	"	39200	113000	15.5	6700	2.5
11.5	**9100**	**1.85**	130.9	"	"	42700	119400	13.5	7700	2.2
9.8	**10700**	**1.55**	149.5	"	"	45600	120000	12	8700	1.95
8.8	**11900**	**1.4**	167.2	"	"	49400	120000	11	9500	1.75
8.4	**12500**	**1.5**	174.7	**BK90Z-../DSE16MA4**	708	49400	120000	10.5	10000	1.85
7.5	**14000**	**1.3**	195.4	"	"	49400	120000	9.1	11500	1.6
6.3	**16600**	**1.1**	234.6	"	"	49400	120000	7.6	13800	1.35
5.6	**18700**	**0.99**	262.5	"	"	49400	120000	6.8	15400	1.2
5.0	**21000**	**0.88**	295.6	"	"	49400	120000	6.0	17500	1.05

P = 15 kW

50 Hz			i	Type	m	F_{RN}	F_{RV}	60 Hz		
n_2	M_2	f_B						n_2	M_2	f_B
1/min	Nm				kg	N	N	1/min	Nm	
400	**325**	**2.2**	3.67	**BK50-../DSE16LA4**	204	115	9400	480	270	2.7
280	**470**	**1.75**	5.26	"	"	130	10700	335	390	2.1
205	**640**	**1.25**	7.29	"	"	620	11900	245	530	1.55
151	**850**	**1.1**	9.73	"	"	5400	15400	181	710	1.3
146	**900**	**0.9**	10.00	"	"	1220	13200	176	740	1.1
105	**1220**	**0.86**	13.95	"	"	6100	17400	127	1010	1.05
205	**690**	**2.1**	7.29	**BK60-../DSE16LA4**	216	2800	14900	245	580	2.5
135	**1060**	**1.6**	10.82	"	"	3200	17000	163	870	1.95
106	**1350**	**1.45**	13.85	"	"	3850	18000	128	1110	1.8
102	**1400**	**1.4**	14.41	"	"	3650	18600	123	1160	1.65
80	**1790**	**1.2**	18.36	"	"	4000	19900	96	1490	1.45
72	**1980**	**1.15**	20.54	"	"	4400	20600	86	1660	1.35
60	**2350**	**0.98**	24.45	"	"	4850	22000	72	1980	1.15
54	**2650**	**0.87**	27.36	"	"	5600	23200	65	2200	1.05
67	**2100**	**1.95**	21.88	**BK70-../DSE16LA4**	299	6500	30200	81	1760	2.3
59	**2400**	**1.8**	24.89	"	"	7000	31500	71	2000	2.1
47.5	**3000**	**1.5**	30.90	"	"	7500	33600	57	2500	1.8
42	**3400**	**1.4**	35.15	"	"	8000	35000	51	2800	1.7

P = 15 kW

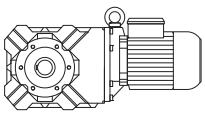

50 Hz			i	Type	m	F_{RN}	F_{RV}	60 Hz		
n_2	M_2	f_B						n_2	M_2	f_B
1/min	Nm				kg	N	N	1/min	Nm	
36.5	**3900**	**1.25**	40.08	**BK70-../DSE16LA4**	"	8300	36300	44	3250	1.5
32.5	**4400**	**1.15**	45.59	"	"	9000	37900	39	3650	1.4
27	**5300**	**0.98**	54.15	"	"	9900	40200	33	4300	1.2
24	**5900**	**0.88**	61.60	"	"	11500	42800	29	4900	1.05
48	**2950**	**2.5**	30.56	**BK80-../DSE16LA4**	408	11900	53400	58	2450	3.1
43	**3300**	**2.4**	34.22	"	"	12600	55400	52	2750	2.8
35	**4050**	**2.0**	41.78	"	"	13500	58700	42.5	3350	2.5
31.5	**4500**	**1.9**	46.80	"	"	14300	60900	38	3750	2.3
27.5	**5200**	**1.7**	53.21	"	"	14800	63100	33.5	4250	2.1
24.5	**5800**	**1.6**	59.60	"	"	15700	65500	30	4750	1.95
21	**6800**	**1.4**	70.72	"	"	16600	68700	25	5700	1.7
18.5	**7700**	**1.3**	79.22	"	"	17600	71300	22.5	6300	1.6
16	**8900**	**1.15**	91.53	"	"	18300	74200	19.5	7300	1.4
14.5	**9800**	**1.05**	102.5	"	"	20500	75000	17.5	8100	1.3
12.5	**11400**	**0.92**	117.5	"	"	22300	75000	15	9500	1.1
11.5	**12400**	**0.85**	131.6	"	"	24900	75000	13.5	10600	0.99
27	**5300**	**3.0**	54.98	**BK90-../DSE16LA4**	662	24000	81000	32.5	4400	3.7
24	**5900**	**2.8**	61.52	"	"	25500	84600	29	4900	3.4
21.5	**6600**	**2.5**	69.27	"	"	27200	88900	25.5	5600	3.0
19	**7500**	**2.2**	77.51	"	"	30300	94400	23	6200	2.7
16.5	**8600**	**1.95**	91.19	"	"	33300	101000	19.5	7300	2.3
14.5	**9800**	**1.7**	102.0	"	"	36600	107000	17.5	8100	2.1
12.5	**11400**	**1.45**	117.0	"	"	39200	113000	15.5	9200	1.85
11.5	**12400**	**1.35**	130.9	"	"	42700	119400	13.5	10600	1.6
9.8	**14600**	**1.15**	149.5	"	"	45600	120000	12	11900	1.4
8.8	**16200**	**1.05**	167.2	"	"	49400	120000	11	13000	1.3
8.4	**17000**	**1.1**	174.7	**BK90Z-../DSE16LA4**	721	49400	120000	10.5	13600	1.35
7.5	**19100**	**0.97**	195.4	"	"	49400	120000	9.1	15700	1.2
6.3	**22700**	**0.81**	234.6	"	"	49400	120000	7.6	18800	0.98

P = 18.5 kW

50 Hz			i	Type	m	F_{RN}	F_{RV}	60 Hz		
n_2	M_2	f_B						n_2	M_2	f_B
1/min	Nm				kg	N	N	1/min	Nm	
400	**405**	**1.75**	3.67	**BK50-../DSE16XA4**	214	115	9400	480	335	2.1
280	**580**	**1.4**	5.26	"	"	130	10700	335	485	1.65
205	**790**	**1.05**	7.29	"	"	620	11900	245	660	1.25
151	**1050**	**0.89**	9.73	"	"	5400	15400	181	870	1.05
205	**860**	**1.7**	7.29	**BK60-../DSE16XA4**	226	2800	14900	245	720	2.0
135	**1300**	**1.3**	10.82	"	"	3200	17000	163	1080	1.55
106	**1660**	**1.2**	13.85	"	"	3850	18000	128	1380	1.45
102	**1730**	**1.1**	14.41	"	"	3650	18600	123	1430	1.35
80	**2200**	**0.99**	18.36	"	"	4000	19900	96	1840	1.2
72	**2450**	**0.92**	20.54	"	"	4400	20600	86	2050	1.1
67	**2600**	**1.55**	21.88	**BK70-../DSE16XA4**	309	6500	30200	81	2150	1.9
59	**2950**	**1.45**	24.89	"	"	7000	31500	71	2450	1.75
47.5	**3700**	**1.2**	30.90	"	"	7500	33600	57	3050	1.5
42	**4200**	**1.15**	35.15	"	"	8000	35000	51	3450	1.35
36.5	**4800**	**1.0**	40.08	"	"	8300	36300	44	4000	1.2
32.5	**5400**	**0.95**	45.59	"	"	9000	37900	39	4500	1.15
27	**6500**	**0.8**	54.15	"	"	9900	40200	33	5300	0.98
48	**3650**	**2.1**	30.56	**BK80-../DSE16XA4**	418	11900	53400	58	3000	2.5
43	**4100**	**1.9**	34.22	"	"	12600	55400	52	3350	2.3
35	**5000**	**1.65**	41.78	"	"	13500	58700	42.5	4150	2.0
31.5	**5600**	**1.55**	46.80	"	"	14300	60900	38	4600	1.85
27.5	**6400**	**1.4**	53.21	"	"	14800	63100	33.5	5200	1.7
24.5	**7200**	**1.3**	59.60	"	"	15700	65500	30	5800	1.6
21	**8400**	**1.15**	70.72	"	"	16600	68700	25	7000	1.4
18.5	**9500**	**1.05**	79.22	"	"	17600	71300	22.5	7800	1.3

P = 18.5 kW

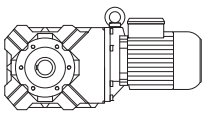

50 Hz			i	Type	m	F_{RN}	F_{RV}	60 Hz		
n_2	M_2	f_B						n_2	M_2	f_B
1/min	Nm				kg	N	N	1/min	Nm	
16	**11000**	**0.95**	91.53	**BK80-../DSE16XA**	"	18300	74200	19.5	9000	1.15
14.5	**12100**	**0.87**	102.5	"	"	20500	75000	17.5	10000	1.05
36	**4900**	**3.0**	40.94	**BK90-../DSE16XA4**	672	21400	73100	43	4100	3.6
32	**5500**	**2.8**	45.80	"	"	22700	76300	38.5	4550	3.4
27	**6500**	**2.5**	54.98	"	"	24000	81000	32.5	5400	3.0
24	**7300**	**2.3**	61.52	"	"	25500	84600	29	6000	2.8
21.5	**8200**	**2.0**	69.27	"	"	27200	88900	25.5	6900	2.4
19	**9200**	**1.85**	77.51	"	"	30300	94400	23	7600	2.2
16.5	**10700**	**1.55**	91.19	"	"	33300	101000	19.5	9000	1.85
14.5	**12100**	**1.4**	102.0	"	"	36600	107000	17.5	10000	1.7
12.5	**14100**	**1.2**	117.0	"	"	39200	113000	15.5	11300	1.5
11.5	**15300**	**1.1**	130.9	"	"	42700	119400	13.5	13000	1.3
9.8	**18000**	**0.93**	149.5	"	"	45600	120000	12	14700	1.15
8.8	**20000**	**0.84**	167.2	"	"	49400	120000	11	16000	1.05
8.4	**21000**	**0.88**	174.7	**BK90Z-../DSE16XA4**	731	49400	120000	10.5	16800	1.1

P = 22 kW

50 Hz			i	Type	m	F_{RN}	F_{RV}	60 Hz		
n_2	M_2	f_B						n_2	M_2	f_B
1/min	Nm				kg	N	N	1/min	Nm	
400	**480**	**1.5**	3.67	**BK50-../DSE18LA4**	282	115	9400	480	400	1.8
280	**690**	**1.2**	5.26	"	"	130	10700	335	570	1.4
205	**940**	**0.86**	7.29	"	"	620	11900	245	780	1.05
205	**1020**	**1.45**	7.29	**BK60-../DSE18LA4**	289	2800	14900	245	850	1.7
135	**1550**	**1.1**	10.82	"	"	3200	17000	163	1280	1.3
106	**1980**	**1.0**	13.85	"	"	3850	18000	128	1640	1.2
102	**2050**	**0.94**	14.41	"	"	3650	18600	123	1700	1.15
80	**2600**	**0.84**	18.36	"	"	4000	19900	96	2150	1.0
97	**2150**	**1.45**	15.16	**BK70-../DSE18LA4**	366	5600	25800	117	1790	1.7
85	**2450**	**1.45**	17.24	"	"	6500	29200	103	2000	1.75
67	**3100**	**1.3**	21.88	"	"	6500	30200	81	2550	1.6
59	**3550**	**1.2**	24.89	"	"	7000	31500	71	2950	1.45
47.5	**4400**	**1.05**	30.90	"	"	7500	33600	57	3650	1.25
42	**5000**	**0.95**	35.15	"	"	8000	35000	51	4100	1.15
36.5	**5700**	**0.86**	40.08	"	"	8300	36300	44	4750	1.05
32.5	**6400**	**0.8**	45.59	"	"	9000	37900	39	5300	0.97
92	**2250**	**2.1**	15.88	**BK80-../DSE18LA4**	480	8400	38600	111	1890	2.5
83	**2500**	**2.1**	17.79	"	"	9400	42100	99	2100	2.5
66	**3150**	**2.2**	22.19	"	"	10500	48500	80	2600	2.6
59	**3550**	**2.0**	24.85	"	"	11200	50400	71	2950	2.4
48	**4350**	**1.7**	30.56	"	"	11900	53400	58	3600	2.1
43	**4850**	**1.6**	34.22	"	"	12600	55400	52	4000	1.95
35	**6000**	**1.35**	41.78	"	"	13500	58700	42.5	4900	1.7
31.5	**6600**	**1.3**	46.80	"	"	14300	60900	38	5500	1.55
27.5	**7600**	**1.15**	53.21	"	"	14800	63100	33.5	6200	1.45
24.5	**8500**	**1.1**	59.60	"	"	15700	65500	30	7000	1.3
21	**10000**	**0.96**	70.72	"	"	16600	68700	25	8400	1.15
18.5	**11300**	**0.89**	79.22	"	"	17600	71300	22.5	9300	1.1
48	**4350**	**3.1**	30.47	**BK90-../DSE18LA4**	734	19100	65900	58	3600	3.8
43	**4850**	**2.9**	34.09	"	"	20300	68800	52	4000	3.5
36	**5800**	**2.5**	40.94	"	"	21400	73100	43	4850	3.0
32	**6500**	**2.4**	45.80	"	"	22700	76300	38.5	5400	2.9
27	**7700**	**2.1**	54.98	"	"	24000	81000	32.5	6400	2.5
24	**8700**	**1.95**	61.52	"	"	25500	84600	29	7200	2.3
21.5	**9700**	**1.75**	69.27	"	"	27200	88900	25.5	8200	2.0
19	**11000**	**1.55**	77.51	"	"	30300	94400	23	9100	1.85
16.5	**12700**	**1.3**	91.19	"	"	33300	101000	19.5	10700	1.55
14.5	**14400**	**1.15**	102.0	"	"	36600	107000	17.5	12000	1.4
12.5	**16800**	**1.0**	117.0	"	"	39200	113000	15.5	13500	1.25
11.5	**18200**	**0.92**	130.9	"	"	42700	119400	13.5	15500	1.1

P = 30 kW

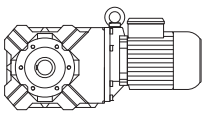

50 Hz			i	Type	m	F_{RN}	F_{RV}	60 Hz		
n_2	M_2	f_B						n_2	M_2	f_B
1/min	Nm				kg	N	N	1/min	Nm	
400	**650**	**1.1**	3.67	**BK50-../DSE18XA4**	300	115	9400	480	540	1.35
280	**940**	**0.86**	5.26	"	"	130	10700	335	780	1.05
205	**1390**	**1.05**	7.29	**BK60-../DSE18XA4**	307	2800	14900	245	1160	1.25
135	**2100**	**0.8**	10.82	"	"	3200	17000	163	1750	0.96
97	**2950**	**1.05**	15.16	**BK70-../DSE18XA4**	384	5600	25800	117	2400	1.3
85	**3350**	**1.05**	17.24	"	"	6500	29200	103	2750	1.25
67	**4250**	**0.96**	21.88	"	"	6500	30200	81	3500	1.15
59	**4850**	**0.88**	24.89	"	"	7000	31500	71	4000	1.05
92	**3100**	**1.55**	15.88	**BK80-../DSE18XA4**	498	8400	38600	111	2550	1.9
83	**3450**	**1.5**	17.79	"	"	9400	42100	99	2850	1.85
66	**4300**	**1.6**	22.19	"	"	10500	48500	80	3550	1.9
59	**4850**	**1.45**	24.85	"	"	11200	50400	71	4000	1.75
48	**5900**	**1.25**	30.56	"	"	11900	53400	58	4900	1.55
43	**6600**	**1.2**	34.22	"	"	12600	55400	52	5500	1.4
35	**8100**	**1.0**	41.78	"	"	13500	58700	42.5	6700	1.25
31.5	**9000**	**0.95**	46.80	"	"	14300	60900	38	7500	1.15
27.5	**10400**	**0.85**	53.21	"	"	14800	63100	33.5	8500	1.05
24.5	**11600**	**0.8**	59.60	"	"	15700	65500	30	9500	0.97
81	**3500**	**3.3**	18.07	**BK90-../DSE18XA4**	752	15600	54400	98	2900	4.0
73	**3900**	**3.1**	20.21	"	"	16600	56700	88	3250	3.7
66	**4300**	**2.9**	22.29	"	"	16900	59100	79	3600	3.4
59	**4850**	**2.6**	24.94	"	"	18000	61700	71	4000	3.2
48	**5900**	**2.3**	30.47	"	"	19100	65900	58	4900	2.8
43	**6600**	**2.1**	34.09	"	"	20300	68800	52	5500	2.6
36	**7900**	**1.85**	40.94	"	"	21400	73100	43	6600	2.2
32	**8900**	**1.75**	45.80	"	"	22700	76300	38.5	7400	2.1
27	**10600**	**1.5**	54.98	"	"	24000	81000	32.5	8800	1.85
24	**11900**	**1.4**	61.52	"	"	25500	84600	29	9800	1.7
21.5	**13300**	**1.25**	69.27	"	"	27200	88900	25.5	11200	1.5
19	**15000**	**1.1**	77.51	"	"	30300	94400	23	12400	1.35
16.5	**17300**	**0.97**	91.19	"	"	33300	101000	19.5	14600	1.15
14.5	**19700**	**0.85**	102.0	"	"	36600	107000	17.5	16300	1.05

P = 37 kW

50 Hz			i	Type	m	F_{RN}	F_{RV}	60 Hz		
n_2	M_2	f_B						n_2	M_2	f_B
1/min	Nm				kg	N	N	1/min	Nm	
94	**3750**	**1.3**	15.88	**BK80-..-C/DHENF22SG4**	802	8400	38600	113	3100	1.55
84	**4200**	**1.25**	17.79	"	"	9400	42100	101	3450	1.5
67	**5200**	**1.3**	22.19	"	"	10500	48500	81	4350	1.55
60	**5800**	**1.2**	24.85	"	"	11200	50400	73	4800	1.5
48.5	**7200**	**1.05**	30.56	"	"	11900	53400	59	5900	1.25
82	**4300**	**2.7**	18.07	**BK90-..-C/DHENF22SG4**	1056	15600	54400	100	3500	3.3
74	**4750**	**2.5**	20.21	"	"	16600	56700	89	3950	3.0
67	**5200**	**2.4**	22.29	"	"	16900	59100	81	4350	2.8
60	**5800**	**2.2**	24.94	"	"	18000	61700	72	4900	2.6
49	**7200**	**1.9**	30.47	"	"	19100	65900	59	5900	2.3
43.5	**8100**	**1.75**	34.09	"	"	20300	68800	53	6600	2.1
36.5	**9600**	**1.55**	40.94	"	"	21400	73100	44	8000	1.85
32.5	**10800**	**1.45**	45.80	"	"	22700	76300	39.5	8900	1.75
27	**13000**	**1.25**	54.98	"	"	24000	81000	33	10700	1.5
24.5	**14400**	**1.15**	61.52	"	"	25500	84600	29.5	11900	1.4
21.5	**16400**	**1.0**	69.27	"	"	27200	88900	26	13500	1.25

P = 45 kW

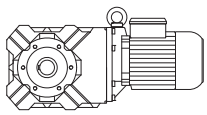

50 Hz			i	Type	m	F_{RN}	F_{RV}	60 Hz		
n_2	M_2	f_B						n_2	M_2	f_B
1/min	Nm				kg	N	N	1/min	Nm	
94	**4550**	**1.05**	15.88	**BK80-..-C/DHENF22MG4**	842	8400	38600	113	3800	1.25
84	**5100**	**1.05**	17.79	"	"	9400	42100	101	4250	1.25
67	**6400**	**1.05**	22.19	"	"	10500	48500	81	5300	1.3
60	**7100**	**1.0**	24.85	"	"	11200	50400	73	5800	1.2
82	**5200**	**2.2**	18.07	**BK90-..-C/DHENF22MG4**	1096	15600	54400	100	4250	2.7
74	**5800**	**2.1**	20.21	"	"	16600	56700	89	4800	2.5
67	**6400**	**1.9**	22.29	"	"	16900	59100	81	5300	2.3
60	**7100**	**1.8**	24.94	"	"	18000	61700	72	5900	2.2
49	**8700**	**1.55**	30.47	"	"	19100	65900	59	7200	1.9
43.5	**9800**	**1.45**	34.09	"	"	20300	68800	53	8100	1.75
36.5	**11700**	**1.25**	40.94	"	"	21400	73100	44	9700	1.5
32.5	**13200**	**1.15**	45.80	"	"	22700	76300	39.5	10800	1.45
27	**15900**	**1.0**	54.98	"	"	24000	81000	33	13000	1.25

P = 55 kW

50 Hz			i	Type	m	F_{RN}	F_{RV}	60 Hz		
n_2	M_2	f_B						n_2	M_2	f_B
1/min	Nm				kg	N	N	1/min	Nm	
82	**6400**	**1.8**	18.07	**BK90-..-C/DHENF25SG4**	1152	15600	54400	100	5200	2.2
74	**7000**	**1.7**	20.21	"	"	16600	56700	89	5900	2.0
67	**7800**	**1.6**	22.29	"	"	16900	59100	81	6400	1.9
60	**8700**	**1.5**	24.94	"	"	18000	61700	72	7200	1.8
49	**10700**	**1.25**	30.47	"	"	19100	65900	59	8900	1.5
43.5	**12000**	**1.2**	34.09	"	"	20300	68800	53	9900	1.4
36.5	**14300**	**1.05**	40.94	"	"	21400	73100	44	11900	1.25

P = 75 kW

50 Hz			i	Type	m	F_{RN}	F_{RV}	60 Hz		
n_2	M_2	f_B						n_2	M_2	f_B
1/min	Nm				kg	N	N	1/min	Nm	
82	**8700**	**1.3**	18.07	**BK90-..-C/DHENF25MG4**	1152	15600	54400	100	7100	1.6
74	**9600**	**1.25**	20.21	"	"	16600	56700	89	8000	1.5
67	**10600**	**1.15**	22.29	"	"	16900	59100	81	8800	1.4
60	**11900**	**1.1**	24.94	"	"	18000	61700	72	9900	1.3

P = 0.03 kW

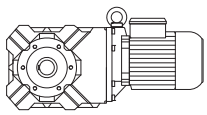

50 Hz			i	Type	m	F_{RN}	F_{RV}	60 Hz		
n_2	M_2	f_B						n_2	M_2	f_B
1/min	Nm				kg	N	N	1/min	Nm	
28.5	**8.9**	**9.0**	47.78	**BK06-../D04LA4**	7.6	1500	-	34	7.4	11
25	**10.1**	**6.7**	54.38	"	"	1600	-	30	8.4	8.1
21.5	**11.8**	**5.4**	63.33	"	"	1700	-	26	9.8	6.5
3.7	**62**	**2.7**	373.4	**BK10Z-../D04LA4**	21	7000	-	4.4	52	3.2
3.2	**71**	**2.1**	428.8	"	"	7000	-	3.8	60	2.5
2.5	**66**	**3.3**	552.3	**BK10G06-../D04LA4**	25	7000	-	3.0	51	4.3
2.2	**77**	**2.9**	635.5	"	"	7000	-	2.6	62	3.5
1.8	**98**	**2.2**	789.7	"	"	7000	-	2.1	80	2.8
1.5	**118**	**1.85**	929.3	"	"	7000	-	1.8	94	2.3
1.3	**139**	**1.6**	1112	"	"	7000	-	1.5	116	1.9
1.0	**184**	**1.2**	1361	"	"	7000	-	1.2	149	1.5
0.9	**205**	**1.05**	1577	"	"	7000	-	1.1	167	1.3
0.7	**220***	**1.0**	1971	"	"	7000	-	0.85	220	1.0
0.6	**220***	**1.0**	2261	"	"	7000	-	0.75	220	1.0
0.55	**220***	**1.0**	2467	"	"	7000	-	0.7	220	1.0
0.48	**220***	**1.0**	2849	"	"	7000	-	0.6	220	1.0
0.44	**220***	**1.0**	3107	"	"	7000	-	0.55	220	1.0
0.39	**220***	**1.0**	3537	"	"	7000	-	0.46	220	1.0
0.33	**220***	**1.0**	4120	"	"	7000	-	0.4	220	1.0
1.6	**110**	**3.3**	891.2	**BK20G06-../D04LA4**	34	8700	9000	1.9	88	4.1
1.3	**138**	**2.6**	1066	"	"	8700	9000	1.6	108	3.3
1.1	**165**	**2.2**	1305	"	"	8700	9000	1.3	135	2.7
0.95	**193**	**1.85**	1424	"	"	8700	9000	1.2	149	2.4
0.85	**220**	**1.65**	1650	"	"	8700	9000	1.0	183	1.95
0.7	**270**	**1.35**	2062	"	"	8700	9000	0.8	235	1.55
0.6	**320**	**1.15**	2366	"	"	8700	9000	0.7	270	1.35
0.55	**350**	**1.05**	2580	"	"	8700	9000	0.65	295	1.2
0.48	**360***	**1.0**	2831	"	"	8700	9000	0.6	360	1.0
0.44	**360***	**1.0**	3088	"	"	8700	9000	0.55	360	1.0
0.39	**360***	**1.0**	3515	"	"	8700	9000	0.47	360	1.0
0.33	**360***	**1.0**	4094	"	"	8700	9000	0.4	360	1.0
1.2	**150**	**3.3**	1142	**BK30G06-../D04LA4**	40	11200	12000	1.5	116	4.2
1.1	**165**	**3.0**	1281	"	"	11200	12000	1.3	135	3.6
0.85	**220**	**2.2**	1620	"	"	11200	12000	1.0	183	2.7
0.8	**235**	**2.1**	1767	"	"	11200	12000	0.95	195	2.5
0.7	**270**	**1.8**	2024	"	"	11200	12000	0.85	220	2.2
0.55	**350**	**1.4**	2533	"	"	11200	12000	0.65	295	1.65
0.5	**380**	**1.3**	2738	"	"	11200	12000	0.6	315	1.55
0.46	**415**	**1.2**	2986	"	"	11200	12000	0.55	345	1.4
0.4	**480**	**1.0**	3399	"	"	11200	12000	0.48	400	1.25
0.35	**490***	**1.0**	3959	"	"	11200	12000	0.41	490	1.0

P = 0.04 kW

50 Hz			i	Type	m	F_{RN}	F_{RV}	60 Hz		
n_2	M_2	f_B						n_2	M_2	f_B
1/min	Nm				kg	N	N	1/min	Nm	
41	**8.3**	**9.6**	33.33	**BK06-../D04LA4**	7.6	1320	-	49	7.0	11
35.5	**9.6**	**8.3**	38.18	"	"	1380	-	42.5	8.0	10
28.5	**11.9**	**6.7**	47.78	"	"	1500	-	34	9.9	8.1
25	**13.5**	**5.0**	54.38	"	"	1600	-	30	11.3	6.0
21.5	**15.8**	**4.0**	63.33	"	"	1700	-	26	13	4.9
4.5	**68**	**2.7**	302.4	**BK10Z-../D04LA4**	21	7000	-	5.4	57	3.2
3.7	**83**	**2.0**	373.4	"	"	7000	-	4.4	70	2.4
3.2	**95**	**1.55**	428.8	"	"	7000	-	3.8	80	1.85
3.0	**78**	**2.8**	459.2	**BK10G06-../D04LA4**	25	7000	-	3.6	62	3.5
2.7	**88**	**2.5**	501.4	"	"	7000	-	3.3	68	3.2
2.5	**96**	**2.3**	552.3	"	"	7000	-	3.0	77	2.9
2.2	**112**	**1.95**	635.5	"	"	7000	-	2.6	91	2.4
1.8	**140**	**1.55**	789.7	"	"	7000	-	2.1	116	1.9
1.5	**167**	**1.3**	929.3	"	"	7000	-	1.8	135	1.65

P = 0.04 kW

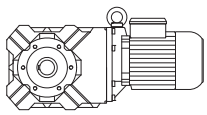

50 Hz			i	Type	m	F_{RN}	F_{RV}	60 Hz		
n_2	M_2	f_B						n_2	M_2	f_B
1/min	Nm				kg	N	N	1/min	Nm	
41	**8.3**	**9.6**	33.33	**BK06-../D04LA4**	7.6	1320	-	49	7.0	11
35.5	**9.6**	**8.3**	38.18	"	"	1380	-	42.5	8.0	10
28.5	**11.9**	**6.7**	47.78	"	"	1500	-	34	9.9	8.1
25	**13.5**	**5.0**	54.38	"	"	1600	-	30	11.3	6.0
21.5	**15.8**	**4.0**	63.33	"	"	1700	-	26	13	4.9
4.5	**68**	**2.7**	302.4	**BK10Z-../D04LA4**	21	7000	-	5.4	57	3.2
3.7	**83**	**2.0**	373.4	"	"	7000	-	4.4	70	2.4
3.2	**95**	**1.55**	428.8	"	"	7000	-	3.8	80	1.85
3.0	**78**	**2.8**	459.2	**BK10G06-../D04LA4**	25	7000	-	3.6	62	3.5
2.7	**88**	**2.5**	501.4	"	"	7000	-	3.3	68	3.2
2.5	**96**	**2.3**	552.3	"	"	7000	-	3.0	77	2.9
2.2	**112**	**1.95**	635.5	"	"	7000	-	2.6	91	2.4
1.8	**140**	**1.55**	789.7	"	"	7000	-	2.1	116	1.9
1.5	**167**	**1.3**	929.3	"	"	7000	-	1.8	135	1.65
0.85	**305**	**1.6**	1620	"	"	11200	12000	1.0	255	1.9
0.8	**325**	**1.5**	1767	"	"	11200	12000	0.95	270	1.8
0.7	**375**	**1.3**	2024	"	"	11200	12000	0.85	305	1.6
0.55	**480**	**1.0**	2533	"	"	11200	12000	0.65	405	1.2

P = 0.06 kW

50 Hz			i	Type	m	F_{RN}	F_{RV}	60 Hz		
n_2	M_2	f_B						n_2	M_2	f_B
1/min	Nm				kg	N	N	1/min	Nm	
63	**8.1**	**9.9**	21.54	**BK06-../D04LA4**	7.6	1150	-	76	6.7	12
52	**9.9**	**8.1**	26.36	"	"	1230	-	62	8.3	9.6
41	**12.5**	**6.4**	33.33	"	"	1320	-	49	10.5	7.6
35.5	**14.5**	**5.5**	38.18	"	"	1380	-	42.5	12.1	6.6
28.5	**17.8**	**4.5**	47.78	"	"	1500	-	34	14.9	5.4
25	**20**	**3.4**	54.38	"	"	1600	-	30	16.9	4.0
21.5	**23.5**	**2.7**	63.33	"	"	1700	-	26	19.6	3.2
11.5	**42**	**3.3**	120.3	**BK10Z-../D06LA4**	24	7000	-	13.5	36	3.8
9.5	**50**	**3.3**	143.2	"	"	7000	-	11.5	41.5	3.9
6.6	**71**	**2.8**	204.7	"	"	7000	-	8.0	58	3.4
5.3	**88**	**2.3**	257.9	"	"	7000	-	6.3	74	2.7
4.5	**103**	**1.8**	302.4	"	"	7000	-	5.4	85	2.2
3.7	**125**	**1.3**	373.4	"	"	7000	-	4.4	105	1.55
3.2	**143**	**1.05**	428.8	"	"	7000	-	3.8	120	1.25
3.0	**129**	**1.7**	459.2	**BK10G06-../D06LA4**	28	7000	-	3.6	104	2.1
2.7	**144**	**1.55**	501.4	"	"	7000	-	3.3	115	1.9
2.5	**157**	**1.4**	552.3	"	"	7000	-	3.0	127	1.75
2.2	**180**	**1.2**	635.5	"	"	7000	-	2.6	149	1.5
1.8	**220**	**1.0**	789.7	"	"	7000	-	2.1	187	1.2
1.5	**265**	**0.83**	929.3	"	"	7000	-	1.8	215	1.0
4.6	**100**	**3.1**	298.2	**BK20Z-../D06LA4**	34	8700	9000	5.5	84	3.7
3.7	**123**	**2.4**	367.7	"	"	8700	9000	4.5	101	2.9
3.2	**120**	**3.0**	429.7	**BK20G06-../D06LA4**	38	8700	9000	3.8	98	3.7
2.9	**133**	**2.7**	480.4	"	"	8700	9000	3.4	110	3.3
2.6	**149**	**2.4**	524.5	"	"	8700	9000	3.1	122	3.0
2.2	**178**	**2.0**	630.0	"	"	8700	9000	2.6	148	2.4
1.8	**220**	**1.65**	757.0	"	"	8700	9000	2.2	178	2.0
1.6	**245**	**1.45**	891.2	"	"	8700	9000	1.9	205	1.75
1.3	**305**	**1.2**	1066	"	"	8700	9000	1.6	245	1.45
1.1	**360**	**1.0**	1305	"	"	8700	9000	1.3	305	1.2
3.6	**128**	**3.1**	380.7	**BK30Z-../D06LA4**	41	11200	12000	4.3	107	3.8
3.1	**147**	**2.6**	441.3	"	"	11200	12000	3.7	123	3.1
2.4	**163**	**3.0**	567.0	**BK30G06-../D06LA4**	44	11200	12000	2.9	132	3.7
2.1	**188**	**2.6**	652.5	"	"	11200	12000	2.5	155	3.2
1.9	**210**	**2.3**	743.0	"	"	11200	12000	2.2	178	2.8
1.7	**235**	**2.1**	810.9	"	"	11200	12000	2.0	196	2.5

P = 0.06 kW

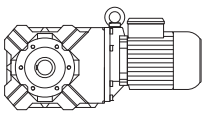

50 Hz			i	Type	m	F_{RN}	F_{RV}	60 Hz		
n_2	M_2	f_B						n_2	M_2	f_B
1/min	Nm				kg	N	N	1/min	Nm	
1.5	**265**	**1.85**	954.1	**BK30G06-../D06LA4**	"	11200	12000	1.7	230	2.1
1.2	**330**	**1.5**	1142	"	"	11200	12000	1.5	260	1.9
1.1	**360**	**1.35**	1281	"	"	11200	12000	1.3	305	1.6
0.85	**475**	**1.05**	1620	"	"	11200	12000	1.0	400	1.25
1.2	**290**	**2.9**	1189	**BK40G10-../D06LA4**	68	11700	17000	1.4	240	3.5
0.95	**380**	**2.2**	1428	"	"	11700	17000	1.2	290	2.9
0.8	**465**	**1.85**	1798	"	"	11700	17000	0.95	385	2.2
0.65	**580**	**1.45**	2108	"	"	11700	17000	0.8	465	1.85
0.6	**640**	**1.35**	2350	"	"	11700	17000	0.7	540	1.55
0.55	**700**	**1.2**	2604	"	"	11700	17000	0.65	580	1.45
1.0	**370**	**3.1**	1398	**BK50G10-../D06LA4**	96	14100	26000	1.2	300	3.8
0.9	**415**	**2.8**	1549	"	"	14100	26000	1.1	335	3.4
0.75	**510**	**2.3**	1816	"	"	14100	26000	0.9	415	2.8
0.7	**550**	**2.1**	2024	"	"	14100	26000	0.85	445	2.6
0.6	**630**	**1.85**	2450	"	"	14100	26000	0.7	530	2.2
0.5	**760**	**1.5**	2730	"	"	14100	26000	0.6	620	1.85
0.45	**850**	**1.35**	3025	"	"	14100	26000	0.55	680	1.7
0.39	**960**	**1.2**	3492	"	"	14100	26000	0.47	790	1.45
0.35	**1080**	**1.05**	3870	"	"	14100	26000	0.42	890	1.3
0.39	**920**	**2.7**	3533	**BK60G20-../D06LA4**	123	16600	34000	0.46	690	3.6
0.32	**1240**	**2.0**	4239	"	"	16600	34000	0.39	920	2.7
0.27	**1570**	**1.6**	5072	"	"	16600	34000	0.32	1240	2.0
0.24	**1830**	**1.35**	5721	"	"	16600	34000	0.29	1420	1.75
0.21	**2150**	**1.15**	6565	"	"	16600	34000	0.25	1740	1.45
0.19	**2450**	**1.0**	7291	"	"	16600	34000	0.23	1940	1.3
0.21	**2000**	**2.9**	6504	**BK70G20-../D06LA4**	201	24100	50000	0.25	1580	3.6
0.17	**2650**	**2.2**	8149	"	"	24100	50000	0.2	2150	2.7
0.15	**3100**	**1.85**	9351	"	"	24100	50000	0.18	2450	2.3

P = 0.09 kW

50 Hz			i	Type	m	F_{RN}	F_{RV}	60 Hz		
n_2	M_2	f_B						n_2	M_2	f_B
1/min	Nm				kg	N	N	1/min	Nm	
89	**8.7**	**9.2**	15.29	**BK06-../D04LA4**	7.6	1020	-	106	7.3	11
75	**10.3**	**7.8**	18.00	"	"	1080	-	90	8.5	9.4
63	**12.2**	**6.6**	21.54	"	"	1150	-	76	10.1	7.9
52	**14.8**	**5.4**	26.36	"	"	1230	-	62	12.4	6.5
41	**18.8**	**4.3**	33.33	"	"	1320	-	49	15.7	5.1
35.5	**21.5**	**3.7**	38.18	"	"	1380	-	42.5	18.2	4.4
28.5	**26.5**	**3.0**	47.78	"	"	1500	-	34	22	3.6
25	**30.5**	**2.2**	54.38	"	"	1600	-	30	25	2.7
21.5	**35.5**	**1.8**	63.33	"	"	1700	-	26	29	2.2
13.5	**54**	**2.9**	102.5	**BK10-../D06LA4**	23	7000	-	16	45.5	3.5
11.5	**63**	**2.2**	120.3	**BK10Z-../D06LA4**	24	7000	-	13.5	54	2.5
9.5	**75**	**2.2**	143.2	"	"	7000	-	11.5	62	2.6
8.0	**89**	**2.2**	170.6	"	"	7000	-	9.5	75	2.7
6.6	**106**	**1.9**	204.7	"	"	7000	-	8.0	88	2.3
5.3	**132**	**1.5**	257.9	"	"	7000	-	6.3	111	1.8
4.5	**154**	**1.2**	302.4	"	"	7000	-	5.4	128	1.45
3.7	**188**	**0.88**	373.4	"	"	7000	-	4.4	158	1.05
3.3	**186**	**1.2**	410.8	**BK10G06-../D06LA4**	28	7000	-	4.0	151	1.45
3.0	**205**	**1.05**	459.2	"	"	7000	-	3.6	168	1.3
2.7	**225**	**0.98**	501.4	"	"	7000	-	3.3	184	1.2
2.5	**245**	**0.9**	552.3	"	"	7000	-	3.0	200	1.1
6.6	**106**	**3.1**	207.5	**BK20Z-../D06LA4**	34	8700	9000	7.9	89	3.7
5.2	**135**	**2.4**	259.9	"	"	8700	9000	6.3	111	3.0
4.6	**151**	**2.1**	298.2	"	"	8700	9000	5.5	126	2.5
3.7	**185**	**1.6**	367.7	"	"	8700	9000	4.5	152	1.9

P = 0.09 kW

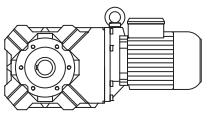

50 Hz			i	Type	m	F_{RN}	F_{RV}	60 Hz		
n_2	M_2	f_B						n_2	M_2	f_B
1/min	Nm				kg	N	N	1/min	Nm	
3.2	**192**	**1.9**	429.7	**BK20G06-../D06LA4**	38	8700	9000	3.8	159	2.3
2.9	**210**	**1.7**	480.4	"	"	8700	9000	3.4	178	2.0
2.6	**235**	**1.55**	524.5	"	"	8700	9000	3.1	196	1.85
2.2	**280**	**1.3**	630.0	"	"	8700	9000	2.6	235	1.55
1.8	**345**	**1.05**	757.0	"	"	8700	9000	2.2	280	1.3
1.6	**385**	**0.94**	891.2	"	"	8700	9000	1.9	320	1.15
4.4	**160**	**2.4**	308.3	**BK30Z-../D06LA4**	41	11200	12000	5.3	132	2.9
3.6	**193**	**2.1**	380.7	"	"	11200	12000	4.3	161	2.5
3.1	**220**	**1.75**	441.3	"	"	11200	12000	3.7	185	2.1
2.9	**210**	**2.3**	471.5	**BK30G06-../D06LA4**	44	11200	12000	3.5	173	2.8
2.4	**255**	**1.9**	567.0	"	"	11200	12000	2.9	210	2.3
2.1	**295**	**1.65**	652.5	"	"	11200	12000	2.5	245	2.0
1.9	**325**	**1.5**	743.0	"	"	11200	12000	2.2	280	1.75
1.7	**365**	**1.35**	810.9	"	"	11200	12000	2.0	305	1.6
1.5	**410**	**1.2**	954.1	"	"	11200	12000	1.7	360	1.35
1.2	**510**	**0.96**	1142	"	"	11200	12000	1.5	410	1.2
1.1	**560**	**0.88**	1281	"	"	11200	12000	1.3	470	1.05
3.9	**178**	**3.3**	348.7	**BK40Z-../D06LA4**	64	11700	17000	4.7	148	3.9
3.2	**210**	**2.7**	430.0	"	"	11700	17000	3.8	180	3.2
1.8	**295**	**2.9**	756.7	**BK40G10-../D06LA4**	68	11700	17000	2.2	230	3.7
1.7	**320**	**2.7**	838.4	"	"	11700	17000	2.0	260	3.3
1.4	**400**	**2.1**	998.3	"	"	11700	17000	1.7	320	2.7
1.2	**475**	**1.8**	1189	"	"	11700	17000	1.4	395	2.2
0.95	**610**	**1.4**	1428	"	"	11700	17000	1.2	475	1.8
0.8	**730**	**1.15**	1798	"	"	11700	17000	0.95	610	1.4
1.6	**350**	**3.3**	859.8	**BK50G10-../D06LA4**	96	14100	26000	1.9	285	4.0
1.4	**410**	**2.8**	1024	"	"	14100	26000	1.6	350	3.3
1.1	**530**	**2.2**	1230	"	"	14100	26000	1.4	410	2.8
1.0	**590**	**1.95**	1398	"	"	14100	26000	1.2	485	2.4
0.9	**660**	**1.75**	1549	"	"	14100	26000	1.1	530	2.2
0.75	**790**	**1.45**	1816	"	"	14100	26000	0.9	650	1.75
0.7	**850**	**1.35**	2024	"	"	14100	26000	0.85	700	1.65
0.6	**980**	**1.15**	2450	"	"	14100	26000	0.7	830	1.4
0.7	**750**	**3.3**	2010	**BK60G20-../D06LA4**	123	16600	34000	0.85	530	4.7
0.6	**930**	**2.7**	2371	"	"	16600	34000	0.7	720	3.5
0.5	**1180**	**2.1**	2733	"	"	16600	34000	0.6	890	2.8
0.45	**1360**	**1.85**	3036	"	"	16600	34000	0.55	1010	2.5
0.39	**1650**	**1.5**	3533	"	"	16600	34000	0.46	1320	1.9
0.32	**2100**	**1.2**	4239	"	"	16600	34000	0.39	1650	1.5
0.35	**1750**	**3.3**	3894	**BK70G20-../D06LA4**	201	24100	50000	0.42	1340	4.3
0.3	**2150**	**2.7**	4531	"	"	24100	50000	0.36	1680	3.4
0.25	**2700**	**2.1**	5436	"	"	24100	50000	0.3	2150	2.7
0.21	**3350**	**1.7**	6504	"	"	24100	50000	0.25	2700	2.1
0.17	**4350**	**1.3**	8149	"	"	24100	50000	0.2	3550	1.6
0.15	**5000**	**1.15**	9351	"	"	24100	50000	0.18	4050	1.4

P = 0.12 kW

50 Hz			i	Type	m	F_{RN}	F_{RV}	60 Hz		
n_2	M_2	f_B						n_2	M_2	f_B
1/min	Nm				kg	N	N	1/min	Nm	
116	**9.0**	**8.9**	11.67	**BK06-../D04LA4**	7.6	930	-	139	7.5	11
89	**11.7**	**6.8**	15.29	"	"	1020	-	106	9.8	8.2
75	**13.7**	**5.8**	18.00	"	"	1080	-	90	11.4	7.0
63	**16.3**	**4.9**	21.54	"	"	1150	-	76	13.5	5.9
52	**19.8**	**4.0**	26.36	"	"	1230	-	62	16.6	4.8
41	**25**	**3.2**	33.33	"	"	1320	-	49	21	3.8
35.5	**29**	**2.8**	38.18	"	"	1380	-	42.5	24	3.3
28.5	**35.5**	**2.3**	47.78	"	"	1500	-	34	29.5	2.7
25	**40.5**	**1.7**	54.38	"	"	1600	-	30	33.5	2.0
21.5	**47**	**1.35**	63.33	"	"	1700	-	26	39	1.65

P = 0.12 kW

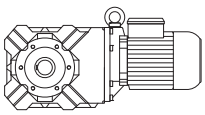

50 Hz			i	Type	m	F_{RN}	F_{RV}	60 Hz		
n_2	M_2	f_B						n_2	M_2	f_B
1/min	Nm				kg	N	N	1/min	Nm	
15.5	**64**	**2.8**	89.30	**BK10-../D06LA4**	23	7000	-	18.5	53	3.4
13.5	**72**	**2.2**	102.5	"	"	7000	-	16	60	2.6
11.5	**84**	**1.65**	120.3	**BK10Z-../D06LA4**	24	7000	-	13.5	72	1.9
9.5	**101**	**1.6**	143.2	"	"	7000	-	11.5	83	1.95
8.0	**118**	**1.7**	170.6	"	"	7000	-	9.5	100	2.0
6.6	**142**	**1.4**	204.7	"	"	7000	-	8.0	117	1.7
5.3	**177**	**1.15**	257.9	"	"	7000	-	6.3	149	1.35
4.5	**205**	**0.9**	302.4	"	"	7000	-	5.4	171	1.1
4.0	**210**	**1.05**	343.2	**BK10G06-../D06LA4**	28	7000	-	4.8	173	1.25
3.3	**255**	**0.86**	410.8	"	"	7000	-	4.0	205	1.05
14	**70**	**3.3**	96.99	**BK20Z-../D06LA4**	34	8700	9000	17	57	4.1
9.4	**102**	**3.2**	144.5	"	"	8700	9000	11.5	83	4.0
7.8	**121**	**2.7**	173.4	"	"	8700	9000	9.4	101	3.3
6.6	**142**	**2.3**	207.5	"	"	8700	9000	7.9	118	2.8
5.2	**180**	**1.85**	259.9	"	"	8700	9000	6.3	149	2.2
4.6	**200**	**1.55**	298.2	"	"	8700	9000	5.5	168	1.85
3.7	**245**	**1.2**	367.7	"	"	8700	9000	4.5	200	1.45
3.2	**260**	**1.4**	429.7	**BK20G06-../D06LA4**	38	8700	9000	3.8	215	1.65
2.9	**290**	**1.25**	480.4	"	"	8700	9000	3.4	245	1.45
2.6	**320**	**1.15**	524.5	"	"	8700	9000	3.1	265	1.35
2.2	**380**	**0.95**	630.0	"	"	8700	9000	2.6	320	1.15
6.3	**149**	**3.0**	216.5	**BK30Z-../D06LA4**	41	11200	12000	7.5	125	3.6
5.3	**177**	**2.5**	255.3	"	"	11200	12000	6.4	146	3.1
4.4	**210**	**1.85**	308.3	"	"	11200	12000	5.3	177	2.2
3.6	**255**	**1.6**	380.7	"	"	11200	12000	4.3	215	1.85
3.1	**295**	**1.3**	441.3	"	"	11200	12000	3.7	245	1.55
2.9	**290**	**1.7**	471.5	**BK30G06-../D06LA4**	44	11200	12000	3.5	235	2.1
2.4	**350**	**1.4**	567.0	"	"	11200	12000	2.9	285	1.7
2.1	**400**	**1.25**	652.5	"	"	11200	12000	2.5	335	1.45
1.9	**445**	**1.1**	743.0	"	"	11200	12000	2.2	380	1.3
1.7	**495**	**0.99**	810.9	"	"	11200	12000	2.0	420	1.15
1.5	**560**	**0.88**	954.1	"	"	11200	12000	1.7	490	1.0
3.9	**235**	**2.5**	348.7	**BK40Z-../D06LA4**	64	11700	17000	4.7	197	2.9
3.2	**285**	**2.0**	430.0	"	"	11700	17000	3.8	240	2.4
2.8	**255**	**3.3**	487.3	**BK40G10-../D06LA4**	68	11700	17000	3.4	200	4.3
2.5	**290**	**2.9**	540.0	"	"	11700	17000	3.0	230	3.7
2.1	**355**	**2.4**	660.2	"	"	11700	17000	2.5	285	3.0
1.8	**420**	**2.0**	756.7	"	"	11700	17000	2.2	330	2.6
1.7	**450**	**1.9**	838.4	"	"	11700	17000	2.0	370	2.3
1.4	**550**	**1.55**	998.3	"	"	11700	17000	1.7	450	1.9
1.2	**660**	**1.3**	1189	"	"	11700	17000	1.4	550	1.55
0.95	**840**	**1.0**	1428	"	"	11700	17000	1.2	660	1.3
3.3	**275**	**3.1**	414.8	**BK50Z-../D06LA4**	92	14100	26000	4.0	225	3.8
2.1	**360**	**3.2**	651.7	**BK50G10-../D06LA4**	96	14100	26000	2.5	295	3.9
1.9	**405**	**2.8**	722.2	"	"	14100	26000	2.3	325	3.5
1.6	**490**	**2.3**	859.8	"	"	14100	26000	1.9	405	2.8
1.4	**560**	**2.1**	1024	"	"	14100	26000	1.6	490	2.3
1.1	**730**	**1.6**	1230	"	"	14100	26000	1.4	570	2.0
1.0	**800**	**1.45**	1398	"	"	14100	26000	1.2	660	1.75
0.9	**900**	**1.3**	1549	"	"	14100	26000	1.1	730	1.6
0.75	**1080**	**1.05**	1816	"	"	14100	26000	0.9	900	1.3
0.85	**930**	**2.7**	1618	**BK60G20-../D06LA4**	123	16600	34000	1.1	630	4.0
0.75	**1070**	**2.3**	1810	"	"	16600	34000	0.9	810	3.1
0.7	**1160**	**2.2**	2010	"	"	16600	34000	0.85	870	2.9
0.6	**1400**	**1.8**	2371	"	"	16600	34000	0.7	1130	2.2
0.5	**1750**	**1.45**	2733	"	"	16600	34000	0.6	1370	1.8
0.45	**1990**	**1.25**	3036	"	"	16600	34000	0.55	1530	1.65
0.39	**2350**	**1.05**	3533	"	"	16600	34000	0.46	1940	1.3
0.45	**1900**	**3.0**	3041	**BK70G20-../D06LA4**	201	24100	50000	0.55	1440	4.0
0.39	**2250**	**2.5**	3505	"	"	24100	50000	0.47	1750	3.3

P = 0.12 kW

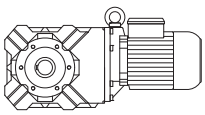

50 Hz			i	Type	m	F_{RN}	F_{RV}	60 Hz		
n_2	M_2	f_B						n_2	M_2	f_B
1/min	Nm				kg	N	N	1/min	Nm	
0.35	**2550**	**2.2**	3894	"	"	24100	50000	0.42	2000	2.9
0.3	**3100**	**1.85**	4531	"	"	24100	50000	0.36	2450	2.3
0.25	**3850**	**1.5**	5436	"	"	24100	50000	0.3	3100	1.85
0.21	**4750**	**1.2**	6504	"	"	24100	50000	0.25	3850	1.5

P = 0.18 kW

50 Hz			i	Type	m	F_{RN}	F_{RV}	60 Hz		
n_2	M_2	f_B						n_2	M_2	f_B
1/min	Nm				kg	N	N	1/min	Nm	
140	**11.2**	**7.1**	9.71	**BK06-../D05LA4**	9.5	880	-	167	9.4	8.5
116	**13.6**	**5.9**	11.67	"	"	930	-	139	11.3	7.1
89	**17.5**	**4.6**	15.29	"	"	1020	-	106	14.7	5.4
75	**20.5**	**3.9**	18.00	"	"	1080	-	90	17.1	4.7
63	**24.5**	**3.3**	21.54	"	"	1150	-	76	20	4.0
52	**29.5**	**2.7**	26.36	"	"	1230	-	62	24.5	3.3
41	**37.5**	**2.1**	33.33	"	"	1320	-	49	31.5	2.5
35.5	**43.5**	**1.85**	38.18	"	"	1380	-	42.5	36	2.2
28.5	**53**	**1.5**	47.78	"	"	1500	-	34	44.5	1.8
25	**61**	**1.1**	54.38	"	"	1600	-	30	50	1.35
21.5	**71**	**0.89**	63.33	"	"	1700	-	26	58	1.1
22	**69**	**2.9**	61.68	**BK10-../D06LA4**	23	7000	-	26.5	57	3.5
19	**79**	**2.5**	72.31	"	"	7000	-	22.5	67	3.0
15.5	**96**	**1.85**	89.30	"	"	7000	-	18.5	80	2.2
13.5	**108**	**1.45**	102.5	"	"	7000	-	16	91	1.75
11.5	**127**	**1.1**	120.3	**BK10Z-../D06LA4**	24	7000	-	13.5	108	1.25
9.5	**151**	**1.1**	143.2	"	"	7000	-	11.5	125	1.3
8.0	**178**	**1.1**	170.6	"	"	7000	-	9.5	150	1.35
6.6	**210**	**0.95**	204.7	"	"	7000	-	8.0	176	1.15
12.5	**118**	**2.7**	108.6	**BK20-../D06LA4**	33	8700	9000	15	98	3.2
11	**132**	**2.5**	124.2	**BK20Z-../D06LA4**	34	8700	9000	13.5	108	3.1
9.4	**153**	**2.2**	144.5	"	"	8700	9000	11.5	125	2.6
7.8	**182**	**1.8**	173.4	"	"	8700	9000	9.4	151	2.2
6.6	**210**	**1.55**	207.5	"	"	8700	9000	7.9	178	1.85
5.2	**270**	**1.2**	259.9	"	"	8700	9000	6.3	220	1.5
4.6	**300**	**1.05**	298.2	"	"	8700	9000	5.5	250	1.25
3.8	**340**	**1.05**	359.1	**BK20G06-../D06LA4**	38	8700	9000	4.6	280	1.3
3.2	**405**	**0.89**	429.7	"	"	8700	9000	3.8	340	1.05
2.9	**445**	**0.81**	480.4	"	"	8700	9000	3.4	380	0.95
9.4	**153**	**2.9**	145.1	**BK30Z-../D06LA4**	41	11200	12000	11.5	125	3.6
7.4	**192**	**2.3**	184.8	"	"	11200	12000	8.8	162	2.8
6.3	**220**	**2.0**	216.5	"	"	11200	12000	7.5	187	2.4
5.3	**265**	**1.7**	255.3	"	"	11200	12000	6.4	220	2.0
4.4	**320**	**1.2**	308.3	"	"	11200	12000	5.3	265	1.45
3.6	**385**	**1.05**	380.7	"	"	11200	12000	4.3	320	1.25
3.1	**440**	**0.87**	441.3	"	"	11200	12000	3.7	370	1.05
2.9	**445**	**1.1**	471.5	**BK30G06-../D06LA4**	44	11200	12000	3.5	370	1.3
2.4	**540**	**0.91**	567.0	"	"	11200	12000	2.9	445	1.1
2.1	**610**	**0.8**	652.5	"	"	11200	12000	2.5	510	0.96
5.5	**250**	**3.1**	246.6	**BK40Z-../D06LA4**	64	11700	17000	6.6	210	3.7
4.7	**295**	**2.3**	289.8	"	"	11700	17000	5.6	245	2.8
3.9	**355**	**1.65**	348.7	"	"	11700	17000	4.7	295	1.95
3.2	**425**	**1.35**	430.0	"	"	11700	17000	3.8	360	1.6
2.8	**420**	**2.0**	487.3	**BK40G10-../D06LA4**	68	11700	17000	3.4	335	2.5
2.5	**470**	**1.8**	540.0	"	"	11700	17000	3.0	385	2.2
2.1	**560**	**1.5**	660.2	"	"	11700	17000	2.5	465	1.85
1.8	**660**	**1.3**	756.7	"	"	11700	17000	2.2	530	1.6
1.7	**710**	**1.2**	838.4	"	"	11700	17000	2.0	590	1.45
1.4	**870**	**0.98**	998.3	"	"	11700	17000	1.7	710	1.2
1.2	**1020**	**0.83**	1189	"	"	11700	17000	1.4	870	0.98

P = 0.18 kW

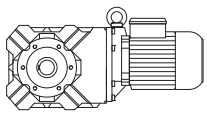

50 Hz			i	Type	m	F_{RN}	F_{RV}	60 Hz		
n_2	M_2	f_B						n_2	M_2	f_B
1/min	Nm				kg	N	N	1/min	Nm	
4.2	**330**	**3.1**	328.2	**BK50Z-../D06LA4**	92	14100	26000	5.0	275	3.7
3.3	**415**	**2.0**	414.8	"	"	14100	26000	4.0	340	2.5
3.0	**395**	**2.9**	465.1	**BK50G10-../D06LA4**	96	14100	26000	3.5	330	3.5
2.7	**440**	**2.6**	513.4	"	"	14100	26000	3.2	365	3.2
2.4	**500**	**2.3**	568.6	"	"	14100	26000	2.9	405	2.8
2.1	**570**	**2.0**	651.7	"	"	14100	26000	2.5	475	2.4
1.9	**640**	**1.8**	722.2	"	"	14100	26000	2.3	520	2.2
1.6	**760**	**1.5**	859.8	"	"	14100	26000	1.9	640	1.8
1.4	**880**	**1.3**	1024	"	"	14100	26000	1.6	760	1.5
1.1	**1120**	**1.05**	1230	"	"	14100	26000	1.4	880	1.3
1.0	**1240**	**0.93**	1398	"	"	14100	26000	1.2	1030	1.1
1.4	**920**	**2.7**	1016	**BK60G20-../D06LA4**	123	16600	34000	1.6	770	3.2
1.1	**1220**	**2.0**	1322	"	"	16600	34000	1.3	980	2.6
0.85	**1610**	**1.55**	1618	"	"	16600	34000	1.1	1150	2.2
0.75	**1830**	**1.35**	1810	"	"	16600	34000	0.9	1450	1.7
0.7	**1980**	**1.25**	2010	"	"	16600	34000	0.85	1550	1.6
0.6	**2350**	**1.05**	2371	"	"	16600	34000	0.7	1950	1.3
0.8	**1720**	**3.3**	1696	**BK70G20-../D06LA4**	201	24100	50000	1.0	1290	4.4
0.7	**1940**	**2.9**	2040	"	"	24100	50000	0.8	1630	3.5
0.55	**2500**	**2.3**	2578	"	"	24100	50000	0.65	2000	2.9
0.45	**3150**	**1.8**	3041	"	"	24100	50000	0.55	2450	2.3
0.39	**3700**	**1.55**	3505	"	"	24100	50000	0.47	2950	1.95
0.35	**4200**	**1.35**	3894	"	"	24100	50000	0.42	3350	1.7
0.3	**5000**	**1.15**	4531	"	"	24100	50000	0.36	4050	1.4

P = 0.25 kW

50 Hz			i	Type	m	F_{RN}	F_{RV}	60 Hz		
n_2	M_2	f_B						n_2	M_2	f_B
1/min	Nm				kg	N	N	1/min	Nm	
140	**15.6**	**5.1**	9.71	**BK06-../D05LA4**	9.5	880	-	167	13.1	6.1
116	**18.9**	**4.2**	11.67	"	"	930	-	139	15.8	5.1
89	**24**	**3.3**	15.29	"	"	1020	-	106	20	4.0
75	**28.5**	**2.8**	18.00	"	"	1080	-	90	23.5	3.4
63	**34**	**2.4**	21.54	"	"	1150	-	76	28	2.9
52	**41**	**1.95**	26.36	"	"	1230	-	62	34.5	2.3
41	**52**	**1.55**	33.33	"	"	1320	-	49	43.5	1.85
35.5	**60**	**1.35**	38.18	"	"	1380	-	42.5	50	1.6
28.5	**74**	**1.1**	47.78	"	"	1500	-	34	62	1.3
25	**84**	**0.81**	54.38	"	"	1600	-	30	70	0.97
33.5	**64**	**3.1**	40.79	**BK10-../D06LA4**	23	6000	-	40	53	3.8
28	**75**	**2.7**	48.96	"	"	6400	-	33.5	63	3.2
22	**96**	**2.1**	61.68	"	"	7000	-	26.5	80	2.5
19	**110**	**1.8**	72.31	"	"	7000	-	22.5	93	2.2
15.5	**134**	**1.35**	89.30	"	"	7000	-	18.5	112	1.6
13.5	**150**	**1.05**	102.5	"	"	7000	-	16	126	1.25
8.0	**245**	**0.82**	170.6	**BK10Z-../D06LA4**	24	7000	-	9.5	205	0.98
18	**116**	**2.8**	76.79	**BK20-../D06LA4**	33	7500	9000	21.5	97	3.4
15.5	**134**	**2.5**	88.12	"	"	8000	9000	18.5	112	2.9
12.5	**164**	**1.9**	108.6	"	"	8700	9000	15	136	2.3
11	**184**	**1.8**	124.2	**BK20Z-../D06LA4**	34	8700	9000	13.5	150	2.2
9.4	**210**	**1.55**	144.5	"	"	8700	9000	11.5	174	1.9
7.8	**250**	**1.3**	173.4	"	"	8700	9000	9.4	210	1.55
6.6	**295**	**1.1**	207.5	"	"	8700	9000	7.9	245	1.35
5.2	**375**	**0.88**	259.9	"	"	8700	9000	6.3	310	1.05
13.5	**150**	**3.0**	102.4	**BK30-../D06LA4**	39	11200	12000	16	126	3.6
11	**184**	**2.4**	123.9	**BK30Z-../D06LA4**	41	11200	12000	13.5	150	3.0
9.4	**210**	**2.1**	145.1	"	"	11200	12000	11.5	174	2.6
7.4	**265**	**1.7**	184.8	"	"	11200	12000	8.8	225	2.0
6.3	**310**	**1.45**	216.5	"	"	11200	12000	7.5	260	1.75

P = 0.25 kW

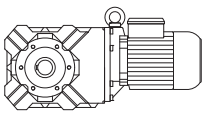

50 Hz			i	Type	m	F_{RN}	F_{RV}	60 Hz		
n_2	M_2	f_B						n_2	M_2	f_B
1/min	Nm				kg	N	N	1/min	Nm	
5.3	**365**	**1.25**	255.3	**BK30Z-../D06LA4**	"	11200	12000	6.4	305	1.5
4.4	**440**	**0.88**	308.3	"	"	11200	12000	5.3	365	1.05
8.0	**245**	**3.2**	169.0	**BK40Z-../D06LA4**	64	11700	17000	9.6	205	3.8
6.4	**305**	**2.6**	211.5	"	"	11700	17000	7.7	250	3.1
5.5	**350**	**2.2**	246.6	"	"	11700	17000	6.6	290	2.7
4.7	**410**	**1.65**	289.8	"	"	11700	17000	5.6	345	2.0
3.9	**495**	**1.15**	348.7	"	"	11700	17000	4.7	410	1.4
3.2	**590**	**0.97**	430.0	"	"	11700	17000	3.8	500	1.15
2.8	**610**	**1.4**	487.3	**BK40G10-../D06LA4**	68	11700	17000	3.4	495	1.7
2.5	**680**	**1.25**	540.0	"	"	11700	17000	3.0	560	1.5
2.1	**810**	**1.05**	660.2	"	"	11700	17000	2.5	680	1.25
1.8	**950**	**0.89**	756.7	"	"	11700	17000	2.2	770	1.1
1.7	**1020**	**0.83**	838.4	"	"	11700	17000	2.0	860	0.99
5.2	**370**	**2.8**	264.5	**BK50Z-../D06LA4**	92	14100	26000	6.2	310	3.4
4.2	**460**	**2.2**	328.2	"	"	14100	26000	5.0	385	2.6
3.3	**570**	**1.5**	414.8	"	"	14100	26000	4.0	475	1.8
3.0	**570**	**2.0**	465.1	**BK50G10-../D06LA4**	96	14100	26000	3.5	485	2.4
2.7	**630**	**1.85**	513.4	"	"	14100	26000	3.2	530	2.2
2.4	**720**	**1.6**	568.6	"	"	14100	26000	2.9	590	1.95
2.1	**820**	**1.4**	651.7	"	"	14100	26000	2.5	680	1.7
1.9	**910**	**1.25**	722.2	"	"	14100	26000	2.3	750	1.55
1.6	**1090**	**1.05**	859.8	"	"	14100	26000	1.9	910	1.25
1.4	**1250**	**0.92**	1024	"	"	14100	26000	1.6	1090	1.05
2.2	**820**	**3.0**	621.5	**BK60G20-../D06LA4**	123	16600	34000	2.7	620	4.0
1.8	**1010**	**2.5**	752.1	"	"	16600	34000	2.2	770	3.2
1.6	**1150**	**2.2**	887.8	"	"	16600	34000	1.9	920	2.7
1.4	**1400**	**1.8**	1016	"	"	16600	34000	1.6	1190	2.1
1.1	**1830**	**1.35**	1322	"	"	16600	34000	1.3	1500	1.65
0.85	**2350**	**1.05**	1618	"	"	16600	34000	1.1	1760	1.4
1.1	**1790**	**3.2**	1280	**BK70G20-../D06LA4**	201	24100	50000	1.3	1450	3.9
0.95	**2050**	**2.8**	1457	"	"	24100	50000	1.2	1560	3.7
0.8	**2550**	**2.2**	1696	"	"	24100	50000	1.0	1950	2.9
0.7	**2850**	**2.0**	2040	"	"	24100	50000	0.8	2450	2.3
0.55	**3700**	**1.55**	2578	"	"	24100	50000	0.65	3050	1.85
0.45	**4650**	**1.25**	3041	"	"	24100	50000	0.55	3650	1.55
0.39	**5400**	**1.05**	3505	"	"	24100	50000	0.47	4350	1.3

P = 0.3 kW

50 Hz			i	Type	m	F_{RN}	F_{RV}	60 Hz		
n_2	M_2	f_B						n_2	M_2	f_B
1/min	Nm				kg	N	N	1/min	Nm	
140	**18.8**	**4.3**	9.71	**BK06-../D07LA4**	14	880	-	167	15.7	5.1
116	**22.5**	**3.6**	11.67	"	"	930	-	139	18.9	4.2
89	**29**	**2.8**	15.29	"	"	1020	-	106	24.5	3.3
75	**34**	**2.4**	18.00	"	"	1080	-	90	28.5	2.8
63	**40.5**	**2.0**	21.54	"	"	1150	-	76	33.5	2.4
52	**49.5**	**1.6**	26.36	"	"	1230	-	62	41.5	1.95
41	**62**	**1.3**	33.33	"	"	1320	-	49	52	1.55
35.5	**72**	**1.1**	38.18	"	"	1380	-	42.5	60	1.35
28.5	**89**	**0.9**	47.78	"	"	1500	-	34	74	1.1
39.5	**65**	**3.1**	34.25	**BK10-../D07LA4**	26	5600	-	47.5	54	3.7
33.5	**76**	**2.6**	40.79	"	"	6000	-	40	64	3.1
28	**91**	**2.2**	48.96	"	"	6400	-	33.5	76	2.6
22	**115**	**1.75**	61.68	"	"	7000	-	26.5	96	2.1
19	**132**	**1.5**	72.31	"	"	7000	-	22.5	112	1.8
15.5	**160**	**1.1**	89.30	"	"	7000	-	18.5	134	1.35
13.5	**180**	**0.87**	102.5	"	"	7000	-	16	152	1.05
22.5	**113**	**2.9**	61.30	**BK20-../D07LA4**	35	6500	9000	26.5	96	3.4
18	**140**	**2.4**	76.79	"	"	7500	9000	21.5	117	2.8

P = 0.3 kW

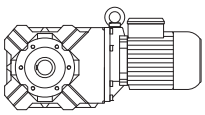

50 Hz			i	Type	m	F_{RN}	F_{RV}	60 Hz		
n_2	M_2	f_B						n_2	M_2	f_B
1/min	Nm				kg	N	N	1/min	Nm	
15.5	**160**	**2.1**	88.12	**BK20-../D07LA4**	"	8000	9000	18.5	134	2.5
12.5	**197**	**1.6**	108.6	"	"	8700	9000	15	164	1.9
11	**220**	**1.5**	124.2	**BK20Z-../D07LA4**	37	8700	9000	13.5	180	1.85
9.4	**255**	**1.3**	144.5	"	"	8700	9000	11.5	205	1.6
7.8	**300**	**1.1**	173.4	"	"	8700	9000	9.4	250	1.3
6.6	**355**	**0.93**	207.5	"	"	8700	9000	7.9	295	1.1
15.5	**158**	**2.8**	88.38	**BK30-../D07LA4**	41	10600	12000	18.5	133	3.4
13.5	**180**	**2.5**	102.4	"	"	11200	12000	16	152	3.0
11	**220**	**2.0**	123.9	**BK30Z-../D07LA4**	44	11200	12000	13.5	180	2.5
9.4	**255**	**1.75**	145.1	"	"	11200	12000	11.5	205	2.2
7.4	**320**	**1.4**	184.8	"	"	11200	12000	8.8	270	1.65
6.3	**370**	**1.2**	216.5	"	"	11200	12000	7.5	310	1.45
5.3	**440**	**1.0**	255.3	"	"	11200	12000	6.4	365	1.25
9.5	**250**	**3.1**	143.0	**BK40Z-../D07LA4**	66	11700	17000	11.5	205	3.8
8.0	**295**	**2.6**	169.0	"	"	11700	17000	9.6	245	3.2
6.4	**365**	**2.1**	211.5	"	"	11700	17000	7.7	305	2.6
5.5	**420**	**1.85**	246.6	"	"	11700	17000	6.6	350	2.2
4.7	**490**	**1.4**	289.8	"	"	11700	17000	5.6	410	1.65
3.9	**590**	**0.98**	348.7	"	"	11700	17000	4.7	490	1.2
3.2	**710**	**0.81**	430.0	"	"	11700	17000	3.8	600	0.96
2.8	**740**	**1.15**	487.3	**BK40G10-../D07LA4**	71	11700	17000	3.4	600	1.4
2.5	**830**	**1.0**	540.0	"	"	11700	17000	3.0	680	1.25
2.1	**990**	**0.86**	660.2	"	"	11700	17000	2.5	830	1.0
6.6	**355**	**3.0**	206.8	**BK50Z-../D07LA4**	95	14100	26000	7.9	295	3.6
5.2	**445**	**2.4**	264.5	"	"	14100	26000	6.2	370	2.8
4.2	**550**	**1.85**	328.2	"	"	14100	26000	5.0	460	2.2
3.3	**690**	**1.2**	414.8	"	"	14100	26000	4.0	570	1.5
3.0	**700**	**1.65**	465.1	**BK50G10-../D07LA4**	99	14100	26000	3.5	590	1.95
2.7	**780**	**1.45**	513.4	"	"	14100	26000	3.2	650	1.75
2.4	**870**	**1.3**	568.6	"	"	14100	26000	2.9	720	1.6
2.1	**1000**	**1.15**	651.7	"	"	14100	26000	2.5	830	1.4
1.9	**1110**	**1.05**	722.2	"	"	14100	26000	2.3	910	1.25
1.6	**1320**	**0.87**	859.8	"	"	14100	26000	1.9	1110	1.05
2.2	**1040**	**2.4**	621.5	**BK60G20-../D07LA4**	125	16600	34000	2.7	800	3.1
1.8	**1270**	**1.95**	752.1	"	"	16600	34000	2.2	980	2.6
1.6	**1450**	**1.7**	887.8	"	"	16600	34000	1.9	1170	2.1
1.4	**1740**	**1.45**	1016	"	"	16600	34000	1.6	1490	1.7
1.1	**2250**	**1.1**	1322	"	"	16600	34000	1.3	1860	1.35
1.2	**1950**	**2.9**	1139	**BK70G20-../D07LA4**	204	24100	50000	1.5	1480	3.9
1.1	**2200**	**2.6**	1280	"	"	24100	50000	1.3	1820	3.1
0.95	**2550**	**2.2**	1457	"	"	24100	50000	1.2	1950	2.9
0.8	**3150**	**1.8**	1696	"	"	24100	50000	1.0	2400	2.4
0.7	**3550**	**1.6**	2040	"	"	24100	50000	0.8	3050	1.85
0.55	**4600**	**1.25**	2578	"	"	24100	50000	0.65	3800	1.5

P = 0.37 kW

50 Hz			i	Type	m	F_{RN}	F_{RV}	60 Hz		
n_2	M_2	f_B						n_2	M_2	f_B
1/min	Nm				kg	N	N	1/min	Nm	
140	**23**	**3.5**	9.71	**BK06-../D07LA4**	14	880	-	167	19.4	4.1
116	**28**	**2.9**	11.67	"	"	930	-	139	23	3.5
89	**36**	**2.2**	15.29	"	"	1020	-	106	30	2.7
75	**42**	**1.9**	18.00	"	"	1080	-	90	35	2.3
63	**50**	**1.6**	21.54	"	"	1150	-	76	41.5	1.95
52	**61**	**1.3**	26.36	"	"	1230	-	62	51	1.55
41	**77**	**1.05**	33.33	"	"	1320	-	49	64	1.25
35.5	**89**	**0.9**	38.18	"	"	1380	-	42.5	74	1.1

P = 0.37 kW

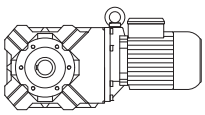

50 Hz			i	Type	m	F_{RN}	F_{RV}	60 Hz		
n_2	M_2	f_B						n_2	M_2	f_B
1/min	Nm				kg	N	N	1/min	Nm	
47	**67**	**3.0**	28.76	**BK10-../D07LA4**	26	5200	-	57	55	3.6
39.5	**80**	**2.5**	34.25	"	"	5600	-	47.5	66	3.0
33.5	**94**	**2.1**	40.79	"	"	6000	-	40	79	2.5
28	**112**	**1.8**	48.96	"	"	6400	-	33.5	93	2.2
22	**142**	**1.4**	61.68	"	"	7000	-	26.5	118	1.7
19	**163**	**1.25**	72.31	"	"	7000	-	22.5	138	1.45
15.5	**198**	**0.9**	89.30	"	"	7000	-	18.5	166	1.05
32	**99**	**3.3**	42.70	**BK20-../D07LA4**	35	5800	9000	38	83	4.0
26.5	**118**	**2.8**	51.22	"	"	6300	9000	32	98	3.4
22.5	**139**	**2.4**	61.30	"	"	6500	9000	26.5	118	2.8
18	**172**	**1.9**	76.79	"	"	7500	9000	21.5	144	2.3
15.5	**198**	**1.65**	88.12	"	"	8000	9000	18.5	166	2.0
12.5	**240**	**1.3**	108.6	"	"	8700	9000	15	200	1.6
11	**270**	**1.2**	124.2	**BK20Z-../D07LA4**	37	8700	9000	13.5	220	1.5
9.4	**315**	**1.05**	144.5	"	"	8700	9000	11.5	255	1.3
7.8	**375**	**0.88**	173.4	"	"	8700	9000	9.4	310	1.05
23	**135**	**3.3**	59.27	**BK30-../D07LA4**	41	8900	12000	27.5	113	4.0
19	**161**	**2.8**	71.56	"	"	9700	12000	23	133	3.4
15.5	**196**	**2.3**	88.38	"	"	10600	12000	18.5	164	2.7
13.5	**220**	**2.0**	102.4	"	"	11200	12000	16	187	2.4
11	**270**	**1.65**	123.9	**BK30Z-../D07LA4**	44	11200	12000	13.5	220	2.0
9.4	**315**	**1.45**	145.1	"	"	11200	12000	11.5	255	1.75
7.4	**395**	**1.15**	184.8	"	"	11200	12000	8.8	330	1.35
6.3	**455**	**0.99**	216.5	"	"	11200	12000	7.5	385	1.15
5.3	**540**	**0.83**	255.3	"	"	11200	12000	6.4	450	1.0
11.5	**260**	**3.0**	118.2	**BK40Z-../D07LA4**	66	11700	17000	14	210	3.7
9.5	**310**	**2.5**	143.0	"	"	11700	17000	11.5	255	3.1
8.0	**365**	**2.1**	169.0	"	"	11700	17000	9.6	305	2.6
6.4	**450**	**1.75**	211.5	"	"	11700	17000	7.7	375	2.1
5.5	**520**	**1.5**	246.6	"	"	11700	17000	6.6	430	1.8
4.7	**600**	**1.15**	289.8	"	"	11700	17000	5.6	510	1.35
3.9	**730**	**0.8**	348.7	"	"	11700	17000	4.7	600	0.97
2.8	**930**	**0.91**	487.3	**BK40G10-../D07LA4**	71	11700	17000	3.4	760	1.1
2.5	**1040**	**0.82**	540.0	"	"	11700	17000	3.0	860	0.99
8.9	**325**	**3.2**	153.3	**BK50Z-../D07LA4**	95	14100	26000	11	265	4.0
6.6	**435**	**2.4**	206.8	"	"	14100	26000	7.9	365	2.9
5.2	**550**	**1.9**	264.5	"	"	14100	26000	6.2	460	2.3
4.2	**680**	**1.5**	328.2	"	"	14100	26000	5.0	570	1.75
3.3	**850**	**0.99**	414.8	"	"	14100	26000	4.0	700	1.2
3.0	**870**	**1.3**	465.1	**BK50G10-../D07LA4**	99	14100	26000	3.5	740	1.55
2.7	**970**	**1.2**	513.4	"	"	14100	26000	3.2	810	1.4
2.4	**1090**	**1.05**	568.6	"	"	14100	26000	2.9	900	1.3
2.1	**1250**	**0.92**	651.7	"	"	14100	26000	2.5	1050	1.1
1.9	**1380**	**0.83**	722.2	"	"	14100	26000	2.3	1140	1.0
2.2	**1340**	**1.85**	621.5	**BK60G20-../D07LA4**	125	16600	34000	2.7	1040	2.4
1.8	**1640**	**1.5**	752.1	"	"	16600	34000	2.2	1290	1.95
1.6	**1870**	**1.35**	887.8	"	"	16600	34000	1.9	1520	1.65
1.4	**2200**	**1.15**	1016	"	"	16600	34000	1.6	1900	1.3
1.1	**2850**	**0.88**	1322	"	"	16600	34000	1.3	2350	1.05
1.6	**1850**	**3.1**	847.7	**BK70G20-../D07LA4**	204	24100	50000	2.0	1410	4.0
1.4	**2100**	**2.7**	964.6	"	"	24100	50000	1.7	1670	3.4
1.2	**2500**	**2.3**	1139	"	"	24100	50000	1.5	1920	3.0
1.1	**2800**	**2.0**	1280	"	"	24100	50000	1.3	2300	2.5
0.95	**3250**	**1.75**	1457	"	"	24100	50000	1.2	2500	2.3
0.8	**3950**	**1.45**	1696	"	"	24100	50000	1.0	3100	1.85
0.7	**4500**	**1.25**	2040	"	"	24100	50000	0.8	3900	1.45

P = 0.55 kW

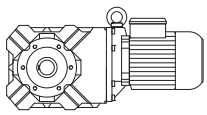

50 Hz			i	Type	m	F_{RN}	F_{RV}	60 Hz		
n_2	M_2	f_B						n_2	M_2	f_B
1/min	Nm				kg	N	N	1/min	Nm	
194	**24.5**	**3.0**	7.25	**BK06-../D08MA4**	15	790	-	235	20.5	3.6
145	**33**	**2.4**	9.71	"	"	880	-	174	27.5	2.9
120	**40**	**2.0**	11.67	"	"	930	-	144	33.5	2.4
92	**51**	**1.55**	15.29	"	"	1020	-	110	43	1.85
78	**60**	**1.35**	18.00	"	"	1080	-	94	50	1.6
65	**72**	**1.1**	21.54	"	"	1150	-	78	60	1.35
54	**87**	**0.92**	26.36	"	"	1230	-	64	73	1.1
118	**40.5**	**2.8**	11.93	**BK10-../D08MA4**	27	3100	-	141	34	3.4
83	**56**	**2.4**	16.92	"	"	3700	-	100	47	2.9
76	**62**	**3.2**	18.52	"	"	4300	-	91	51	3.9
62	**76**	**2.6**	22.65	"	"	4650	-	75	63	3.2
49	**96**	**2.1**	28.76	"	"	5200	-	59	80	2.5
41	**115**	**1.75**	34.25	"	"	5600	-	49.5	95	2.1
34.5	**137**	**1.45**	40.79	"	"	6000	-	41.5	113	1.75
29	**161**	**1.25**	48.96	"	"	6400	-	34.5	135	1.5
23	**200**	**1.0**	61.68	"	"	7000	-	27.5	169	1.2
19.5	**235**	**0.85**	72.31	"	"	7000	-	23.5	196	1.0
38.5	**122**	**2.7**	36.69	**BK20-../D08MA4**	36	5400	9000	46	102	3.2
33	**143**	**2.3**	42.70	"	"	5800	9000	39.5	119	2.8
27.5	**169**	**1.95**	51.22	"	"	6300	9000	33	141	2.3
23	**200**	**1.65**	61.30	"	"	6500	9000	27.5	169	1.95
18.5	**245**	**1.35**	76.79	"	"	7500	9000	22	210	1.55
16	**285**	**1.15**	88.12	"	"	8000	9000	19.5	230	1.45
13	**345**	**0.91**	108.6	"	"	8700	9000	15.5	290	1.1
11.5	**385**	**0.86**	124.2	**BK20Z-../D08MA4**	38	8700	9000	14	315	1.05
33	**141**	**3.2**	42.89	**BK30-../D08MA4**	42	7800	12000	39.5	118	3.8
28	**165**	**2.7**	50.27	"	"	8300	12000	33.5	137	3.3
24	**192**	**2.3**	59.27	"	"	8900	12000	28.5	162	2.8
20	**225**	**2.0**	71.56	"	"	9700	12000	23.5	194	2.3
16	**280**	**1.6**	88.38	"	"	10600	12000	19.5	230	1.95
14	**315**	**1.45**	102.4	"	"	11200	12000	16.5	270	1.65
11.5	**385**	**1.15**	123.9	**BK30Z-../D08MA4**	45	11200	12000	14	315	1.45
9.7	**450**	**1.0**	145.1	"	"	11200	12000	12	365	1.25
17	**265**	**2.9**	84.36	**BK40-../D08MA4**	63	10700	17000	20	225	3.5
13.5	**330**	**2.4**	104.0	"	"	11700	17000	16.5	270	2.9
12	**370**	**2.1**	118.2	**BK40Z-../D08MA4**	67	11700	17000	14.5	305	2.6
9.8	**450**	**1.75**	143.0	"	"	11700	17000	12	365	2.1
8.3	**520**	**1.5**	169.0	"	"	11700	17000	10	435	1.8
6.7	**640**	**1.2**	211.5	"	"	11700	17000	8.0	530	1.45
5.7	**740**	**1.05**	246.6	"	"	11700	17000	6.9	610	1.3
4.9	**860**	**0.8**	289.8	"	"	11700	17000	5.8	730	0.94
12.5	**355**	**3.0**	115.4	**BK50Z-../D08MA4**	96	14100	26000	15	295	3.6
9.2	**470**	**2.2**	153.3	"	"	14100	26000	11	395	2.7
6.8	**630**	**1.65**	206.8	"	"	14100	26000	8.2	520	2.0
5.3	**800**	**1.3**	264.5	"	"	14100	26000	6.4	660	1.6
4.3	**980**	**1.05**	328.2	"	"	14100	26000	5.2	810	1.25
3.1	**1290**	**0.89**	465.1	**BK50G10-../D08MA4**	100	14100	26000	3.7	1080	1.05
2.8	**1420**	**0.81**	513.4	"	"	14100	26000	3.3	1210	0.95
6.9	**760**	**3.0**	205.0	**BK60Z-../D08MA4**	119	16600	34000	8.2	640	3.6
5.9	**890**	**2.6**	239.7	"	"	16600	34000	7.1	730	3.2
5.3	**990**	**2.3**	268.2	"	"	16600	34000	6.3	830	2.8
4.5	**1160**	**2.0**	317.7	"	"	16600	34000	5.3	990	2.3
4.0	**1310**	**1.75**	355.5	"	"	16600	34000	4.8	1090	2.1
3.5	**1500**	**1.55**	411.5	"	"	16600	34000	4.1	1280	1.8
3.1	**1690**	**1.35**	460.4	"	"	16600	34000	3.7	1410	1.65
2.9	**1810**	**1.25**	498.0	"	"	16600	34000	3.4	1540	1.5
2.6	**2000**	**1.15**	557.2	"	"	16600	34000	3.1	1690	1.35
2.3	**2000**	**1.25**	621.5	**BK60G20-../D08MA4**	126	16600	34000	2.8	1610	1.55
1.9	**2400**	**1.05**	752.1	"	"	16600	34000	2.3	1960	1.3
1.6	**2900**	**0.86**	887.8	"	"	16600	34000	1.9	2400	1.05

BK-series bevel geared motors

Selection - bevel geared motors DHE - IE2

P = 0.55 kW

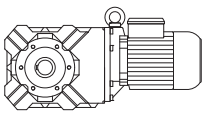

50 Hz			i	Type	m	F_{RN}	F_{RV}	60 Hz		
n_2	M_2	f_B						n_2	M_2	f_B
1/min	Nm				kg	N	N	1/min	Nm	
3.3	**1590**	**3.3**	432.1	**BK70Z-../D08MA4**	207	24100	50000	3.9	1340	3.9
2.8	**1870**	**2.8**	501.8	"	"	24100	50000	3.4	1540	3.4
2.5	**2100**	**2.5**	570.8	"	"	24100	50000	3.0	1750	3.0
2.2	**2350**	**2.2**	644.9	"	"	24100	50000	2.7	1940	2.7
2.0	**2600**	**2.0**	733.6	"	"	24100	50000	2.3	2250	2.3
1.7	**2700**	**2.1**	847.7	**BK70G20-../D08MA4**	205	24100	50000	2.0	2250	2.5
1.5	**3050**	**1.85**	964.6	"	"	24100	50000	1.8	2500	2.3
1.3	**3600**	**1.6**	1139	"	"	24100	50000	1.5	3050	1.85
1.1	**4350**	**1.3**	1280	"	"	24100	50000	1.4	3350	1.7
1.0	**4800**	**1.2**	1457	"	"	24100	50000	1.2	3900	1.45
1.1	**3750**	**3.1**	1307	**BK80G40-../D08MA4**	347	30000	75000	1.3	3000	3.8
1.0	**4050**	**2.8**	1425	"	"	30000	75000	1.2	3150	3.7
0.9	**4600**	**2.5**	1583	"	"	30000	75000	1.1	3550	3.2
0.8	**5200**	**2.2**	1775	"	"	30000	75000	0.95	4200	2.7
0.65	**6600**	**1.75**	2205	"	"	30000	75000	0.8	5100	2.3
0.6	**7300**	**1.6**	2449	"	"	30000	75000	0.7	6000	1.9
0.5	**9000**	**1.3**	2811	"	"	30000	75000	0.6	7200	1.6
0.45	**10200**	**1.15**	3120	"	"	30000	75000	0.55	8000	1.45
0.55	**7400**	**2.5**	2764	**BK90G50-../D08MA4**	620	49400	120000	0.65	5900	3.1
0.46	**9300**	**2.0**	3065	"	"	49400	120000	0.55	7400	2.5
0.39	**11300**	**1.65**	3672	"	"	49400	120000	0.46	9300	2.0
0.35	**12900**	**1.45**	4070	"	"	49400	120000	0.42	10300	1.8
0.29	**16000**	**1.15**	4952	"	"	49400	120000	0.34	13300	1.4
0.26	**18000**	**1.05**	5491	"	"	49400	120000	0.31	14800	1.25

P = 0.75 kW

50 Hz			i	Type	m	F_{RN}	F_{RV}	60 Hz		
n_2	M_2	f_B						n_2	M_2	f_B
1/min	Nm				kg	N	N	1/min	Nm	
196	**33.5**	**2.2**	7.25	**BK06-../DHE08XA4**	18	790	-	240	27	2.7
147	**44.5**	**1.8**	9.71	"	"	880	-	177	37	2.2
122	**54**	**1.5**	11.67	"	"	930	-	147	44.5	1.8
93	**70**	**1.15**	15.29	"	"	1020	-	112	58	1.4
79	**81**	**0.99**	18.00	"	"	1080	-	95	67	1.2
66	**97**	**0.82**	21.54	"	"	1150	-	80	80	1.0
185	**35.5**	**3.2**	7.68	**BK10-../DHE08XA4**	30	2400	-	225	29	4.0
152	**43**	**2.7**	9.40	"	"	2700	-	182	36	3.2
120	**54**	**2.1**	11.93	"	"	3100	-	144	45.5	2.5
98	**65**	**3.1**	14.50	"	"	3900	-	118	54	3.7
84	**76**	**1.8**	16.92	"	"	3700	-	102	63	2.2
77	**83**	**2.4**	18.52	"	"	4300	-	93	69	2.9
63	**102**	**1.95**	22.65	"	"	4650	-	76	84	2.4
49.5	**130**	**1.55**	28.76	"	"	5200	-	60	107	1.85
41.5	**155**	**1.3**	34.25	"	"	5600	-	50	128	1.55
35	**184**	**1.1**	40.79	"	"	6000	-	42	153	1.3
29.5	**215**	**0.93**	48.96	"	"	6400	-	35	182	1.1
82	**79**	**2.9**	17.42	**BK20-../DHE08XA4**	39	3250	9000	99	65	3.6
59	**109**	**3.0**	24.29	"	"	4500	9000	71	90	3.7
50	**128**	**2.6**	28.66	"	"	4850	9000	60	107	3.1
39	**165**	**2.0**	36.69	"	"	5400	9000	47	137	2.4
33.5	**192**	**1.7**	42.70	"	"	5800	9000	40.5	159	2.1
28	**225**	**1.45**	51.22	"	"	6300	9000	33.5	190	1.75
23.5	**270**	**1.2**	61.30	"	"	6500	9000	28	225	1.45
18.5	**340**	**0.97**	76.79	"	"	7500	9000	22.5	280	1.2
16.5	**375**	**0.88**	88.12	"	"	8000	9000	19.5	315	1.05
42.5	**151**	**3.0**	33.70	**BK30-../DHE08XA4**	45	7000	12000	51	126	3.6
33.5	**190**	**2.4**	42.89	"	"	7800	12000	40	159	2.8
28.5	**220**	**2.0**	50.27	"	"	8300	12000	34.5	182	2.5
24	**260**	**1.75**	59.27	"	"	8900	12000	29	215	2.1

P = 0.75 kW

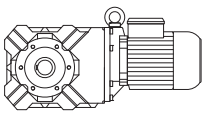

50 Hz			i	Type	m	F_{RN}	F_{RV}	60 Hz		
n_2	M_2	f_B						n_2	M_2	f_B
1/min	Nm				kg	N	N	1/min	Nm	
20	**310**	**1.45**	71.56	**BK30-../DHE08XA4**	"	9700	12000	24	255	1.75
16.5	**370**	**1.2**	88.38	"	"	10600	12000	19.5	315	1.45
14	**430**	**1.05**	102.4	"	"	11200	12000	17	355	1.25
11.5	**520**	**0.87**	123.9	**BK30Z-../DHE08XA4**	48	11200	12000	14	430	1.05
24	**260**	**3.0**	59.66	**BK40-../DHE08XA4**	65	9100	17000	29	215	3.6
20.5	**300**	**2.6**	70.11	"	"	9800	17000	24.5	250	3.1
17	**365**	**2.1**	84.36	"	"	10700	17000	20.5	300	2.6
14	**430**	**1.8**	104.0	"	"	11700	17000	16.5	365	2.1
12.5	**485**	**1.6**	118.2	**BK40Z-../DHE08XA4**	70	11700	17000	14.5	415	1.9
10	**600**	**1.3**	143.0	"	"	11700	17000	12	500	1.55
8.5	**690**	**1.15**	169.0	"	"	11700	17000	10.5	560	1.4
6.8	**860**	**0.91**	211.5	"	"	11700	17000	8.1	720	1.1
19	**325**	**3.2**	75.40	**BK50-../DHE08XA4**	94	12600	26000	23	270	3.9
15	**410**	**2.6**	95.29	"	"	14100	26000	18	340	3.1
12.5	**485**	**2.2**	115.4	**BK50Z-../DHE08XA4**	98	14100	26000	15	405	2.6
9.3	**630**	**1.65**	153.3	"	"	14100	26000	11.5	510	2.1
6.9	**850**	**1.25**	206.8	"	"	14100	26000	8.3	700	1.5
5.4	**1070**	**0.98**	264.5	"	"	14100	26000	6.5	890	1.2
9.3	**770**	**3.0**	153.7	**BK60Z-../DHE08XA4**	121	16600	34000	11.5	620	3.7
7.8	**910**	**2.5**	183.2	"	"	16600	34000	9.4	760	3.0
7.0	**1020**	**2.3**	205.0	"	"	16600	34000	8.4	850	2.7
6.0	**1190**	**1.95**	239.7	"	"	16600	34000	7.2	990	2.3
5.3	**1350**	**1.7**	268.2	"	"	16600	34000	6.4	1110	2.1
4.5	**1590**	**1.45**	317.7	"	"	16600	34000	5.4	1320	1.75
4.0	**1790**	**1.3**	355.5	"	"	16600	34000	4.9	1460	1.6
3.5	**2000**	**1.15**	411.5	"	"	16600	34000	4.2	1700	1.35
3.1	**2300**	**1.0**	460.4	"	"	16600	34000	3.8	1880	1.2
2.9	**2450**	**0.94**	498.0	"	"	16600	34000	3.5	2000	1.15
2.6	**2750**	**0.84**	557.2	"	"	16600	34000	3.1	2300	1.0
2.3	**2850**	**0.88**	621.5	**BK60G20-../DHE08XA4**	129	16600	34000	2.8	2250	1.1
4.3	**1660**	**3.1**	333.6	**BK70Z-../DHE08XA4**	210	24100	50000	5.2	1370	3.8
3.8	**1880**	**2.8**	379.9	"	"	24100	50000	4.6	1550	3.4
3.3	**2150**	**2.4**	432.1	"	"	24100	50000	4.0	1790	2.9
2.9	**2450**	**2.1**	501.8	"	"	24100	50000	3.5	2000	2.6
2.5	**2850**	**1.8**	570.8	"	"	24100	50000	3.0	2350	2.2
2.3	**3100**	**1.7**	644.9	"	"	24100	50000	2.7	2650	1.95
2.0	**3550**	**1.45**	733.6	"	"	24100	50000	2.4	2950	1.75
1.7	**3850**	**1.5**	847.7	**BK70G20-../DHE08XA4**	207	24100	50000	2.1	3050	1.85
1.5	**4350**	**1.3**	964.6	"	"	24100	50000	1.8	3550	1.6
1.3	**5000**	**1.15**	1139	"	"	24100	50000	1.6	4000	1.45
1.2	**5500**	**1.05**	1280	"	"	24100	50000	1.4	4700	1.2
1.0	**6700**	**0.85**	1457	"	"	24100	50000	1.2	5500	1.05
1.5	**3850**	**3.0**	963.0	**BK80G40-../DHE08XA4**	349	30000	75000	1.8	3050	3.8
1.4	**4100**	**2.8**	1079	"	"	30000	75000	1.6	3450	3.3
1.1	**5400**	**2.1**	1307	"	"	30000	75000	1.4	4100	2.8
1.0	**5900**	**1.95**	1425	"	"	30000	75000	1.2	4750	2.4
0.9	**6700**	**1.7**	1583	"	"	30000	75000	1.1	5200	2.2
0.8	**7600**	**1.5**	1775	"	"	30000	75000	1.0	5800	2.0
0.65	**9600**	**1.2**	2205	"	"	30000	75000	0.8	7500	1.55
0.6	**10400**	**1.1**	2449	"	"	30000	75000	0.7	8700	1.3
0.9	**6400**	**2.9**	1579	**BK90G50-../DHE08XA4**	622	49400	120000	1.1	5000	3.7
0.8	**7200**	**2.6**	1803	"	"	49400	120000	0.95	5800	3.2
0.75	**7600**	**2.4**	2016	"	"	49400	120000	0.85	6500	2.8
0.55	**10900**	**1.7**	2764	"	"	49400	120000	0.65	8900	2.1
0.47	**13100**	**1.4**	3065	"	"	49400	120000	0.6	9800	1.9
0.39	**16200**	**1.15**	3672	"	"	49400	120000	0.47	13100	1.4
0.35	**18300**	**1.0**	4070	"	"	49400	120000	0.43	14500	1.3

P = 1.1 kW

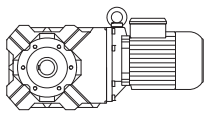

50 Hz			i	Type	m	F_{RN}	F_{RV}	60 Hz		
n_2	M_2	f_B						n_2	M_2	f_B
1/min	Nm				kg	N	N	1/min	Nm	
325	**29.5**	**3.2**	4.44	**BK10-../DHE09LA4**	36	1890	-	395	24	4.0
240	**40**	**2.6**	6.02	"	"	2100	-	290	33	3.2
188	**51**	**2.3**	7.68	"	"	2400	-	230	42	2.7
154	**62**	**1.85**	9.40	"	"	2700	-	186	51	2.3
135	**70**	**2.6**	10.70	"	"	3500	-	163	58	3.1
121	**79**	**1.45**	11.93	"	"	3100	-	146	66	1.75
100	**94**	**2.1**	14.50	"	"	3900	-	120	78	2.6
86	**109**	**1.25**	16.92	"	"	3700	-	103	91	1.5
78	**121**	**1.65**	18.52	"	"	4300	-	94	100	2.0
64	**147**	**1.35**	22.65	"	"	4650	-	77	122	1.65
51	**185**	**1.1**	28.76	"	"	5200	-	61	154	1.3
42.5	**220**	**0.91**	34.25	"	"	5600	-	51	185	1.1
124	**77**	**3.0**	11.69	**BK20-../DHE09LA4**	46	2400	8800	149	64	3.6
83	**115**	**2.0**	17.42	"	"	3250	9000	100	95	2.4
75	**126**	**2.6**	19.39	"	"	4050	9000	90	105	3.1
60	**157**	**2.1**	24.29	"	"	4500	9000	72	131	2.5
51	**185**	**1.8**	28.66	"	"	4850	9000	61	154	2.1
39.5	**235**	**1.4**	36.69	"	"	5400	9000	47.5	199	1.65
34	**275**	**1.2**	42.70	"	"	5800	9000	41	230	1.45
28.5	**325**	**1.0**	51.22	"	"	6300	9000	34	270	1.2
23.5	**395**	**0.84**	61.30	"	"	6500	9000	28.5	325	1.0
70	**136**	**2.4**	20.85	**BK30-../DHE09LA4**	52	5000	12000	84	113	2.8
63	**150**	**3.0**	23.20	"	"	5900	12000	75	126	3.6
51	**185**	**2.4**	28.76	"	"	6500	12000	61	154	2.9
43	**215**	**2.1**	33.70	"	"	7000	12000	52	181	2.5
34	**270**	**1.65**	42.89	"	"	7800	12000	41	225	2.0
29	**315**	**1.45**	50.27	"	"	8300	12000	35	260	1.75
24.5	**375**	**1.2**	59.27	"	"	8900	12000	29.5	310	1.45
20.5	**445**	**1.0**	71.56	"	"	9700	12000	24.5	370	1.2
16.5	**540**	**0.83**	88.38	"	"	10600	12000	20	450	1.0
35.5	**265**	**2.9**	40.88	**BK40-../DHE09LA4**	72	7600	17000	43	215	3.6
28.5	**320**	**2.4**	51.18	"	"	8400	17000	34	270	2.9
24.5	**375**	**2.1**	59.66	"	"	9100	17000	29.5	310	2.5
21	**435**	**1.8**	70.11	"	"	9800	17000	25	365	2.1
17.5	**520**	**1.5**	84.36	"	"	10700	17000	21	435	1.8
14	**630**	**1.25**	104.0	"	"	11700	17000	17	520	1.5
12.5	**710**	**1.1**	118.2	**BK40Z-../DHE09LA4**	76	11700	17000	15	590	1.3
10.5	**840**	**0.93**	143.0	"	"	11700	17000	12.5	700	1.1
24	**385**	**2.7**	60.76	**BK50-../DHE09LA4**	100	11400	26000	29	315	3.3
19.5	**465**	**2.3**	75.40	"	"	12600	26000	23.5	385	2.7
15.5	**580**	**1.8**	95.29	"	"	14100	26000	18.5	485	2.2
12.5	**710**	**1.5**	115.4	**BK50Z-../DHE09LA4**	105	14100	26000	15.5	570	1.85
9.4	**920**	**1.15**	153.3	"	"	14100	26000	11.5	750	1.4
7.0	**1230**	**0.85**	206.8	"	"	14100	26000	8.5	1010	1.05
14.5	**720**	**3.2**	101.2	**BK60-../DHE09LA4**	109	13900	34000	17.5	600	3.8
13	**800**	**2.9**	113.2	"	"	15000	34000	15.5	670	3.4
12	**870**	**2.6**	122.5	"	"	15500	34000	14.5	720	3.2
11	**950**	**2.4**	137.0	"	"	16600	34000	13	800	2.9
9.4	**1110**	**2.1**	153.7	**BK60Z-../DHE09LA4**	128	16600	34000	11.5	910	2.5
7.9	**1320**	**1.75**	183.2	"	"	16600	34000	9.5	1100	2.1
7.1	**1470**	**1.55**	205.0	"	"	16600	34000	8.5	1230	1.85
6.1	**1720**	**1.35**	239.7	"	"	16600	34000	7.3	1430	1.6
5.4	**1940**	**1.2**	268.2	"	"	16600	34000	6.5	1610	1.45
4.6	**2250**	**1.0**	317.7	"	"	16600	34000	5.5	1910	1.2
4.1	**2550**	**0.9**	355.5	"	"	16600	34000	4.9	2100	1.1
6.4	**1640**	**3.2**	226.2	**BK70Z-../DHE09LA4**	216	24100	50000	7.7	1360	3.8
5.6	**1870**	**2.8**	257.3	"	"	24100	50000	6.8	1540	3.4
5.0	**2100**	**2.5**	293.3	"	"	24100	50000	6.0	1750	3.0
4.4	**2350**	**2.2**	333.6	"	"	24100	50000	5.3	1980	2.6
3.8	**2750**	**1.9**	379.9	"	"	24100	50000	4.6	2250	2.3

P = 1.1 kW

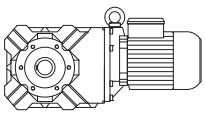

50 Hz			i	Type	m	F_{RN}	F_{RV}	60 Hz		
n_2	M_2	f_B						n_2	M_2	f_B
1/min	Nm				kg	N	N	1/min	Nm	
3.4	**3050**	**1.7**	432.1	**BK70Z-../DHE09LA4**	"	24100	50000	4.1	2550	2.0
2.9	**3600**	**1.45**	501.8	"	"	24100	50000	3.5	3000	1.75
2.6	**4000**	**1.3**	570.8	"	"	24100	50000	3.1	3350	1.55
2.3	**4550**	**1.15**	644.9	"	"	24100	50000	2.7	3850	1.35
2.0	**5200**	**1.0**	733.6	"	"	24100	50000	2.4	4350	1.2
1.7	**5800**	**0.98**	847.7	**BK70G20-../DHE09LA4**	214	24100	50000	2.1	4600	1.25
1.5	**6500**	**0.88**	964.6	"	"	24100	50000	1.9	5100	1.1
2.9	**3600**	**3.2**	499.5	**BK80Z-../DHE09LA4**	345	30000	75000	3.5	3000	3.8
2.6	**4000**	**2.9**	559.5	"	"	30000	75000	3.2	3250	3.5
2.4	**3600**	**3.2**	607.8	**BK80G40-../DHE09LA4**	356	30000	75000	2.9	2850	4.0
2.2	**3900**	**2.9**	680.9	"	"	30000	75000	2.6	3200	3.6
2.0	**4400**	**2.6**	756.3	"	"	30000	75000	2.4	3550	3.2
1.7	**5200**	**2.2**	847.2	"	"	30000	75000	2.1	4050	2.8
1.5	**6100**	**1.9**	963.0	"	"	30000	75000	1.9	4600	2.5
1.4	**6400**	**1.8**	1079	"	"	30000	75000	1.7	5100	2.3
1.2	**7700**	**1.5**	1307	"	"	30000	75000	1.4	6400	1.8
1.1	**8300**	**1.4**	1425	"	"	30000	75000	1.3	6900	1.65
0.95	**9800**	**1.15**	1583	"	"	30000	75000	1.1	8300	1.4
0.85	**11000**	**1.05**	1775	"	"	30000	75000	1.0	9200	1.25
1.5	**5600**	**3.3**	1008	**BK90G50-../DHE09LA4**	629	49400	120000	1.8	4450	4.2
1.3	**6500**	**2.8**	1127	"	"	49400	120000	1.6	5000	3.7
1.1	**8300**	**2.2**	1363	"	"	49400	120000	1.3	6800	2.7
0.95	**9500**	**1.95**	1579	"	"	49400	120000	1.2	7200	2.6
0.8	**11400**	**1.6**	1803	"	"	49400	120000	1.0	8700	2.1
0.75	**12000**	**1.55**	2016	"	"	49400	120000	0.9	9700	1.9
0.55	**16900**	**1.1**	2764	"	"	49400	120000	0.65	14000	1.3

P = 1.5 kW

50 Hz			i	Type	m	F_{RN}	F_{RV}	60 Hz		
n_2	M_2	f_B						n_2	M_2	f_B
1/min	Nm				kg	N	N	1/min	Nm	
325	**40.5**	**2.3**	4.44	**BK10-../DHE09XA4**	40	1890	-	395	33	2.9
240	**54**	**1.95**	6.02	"	"	2100	-	290	45	2.3
188	**70**	**1.65**	7.68	"	"	2400	-	230	57	2.0
154	**85**	**1.35**	9.40	"	"	2700	-	186	70	1.65
135	**95**	**1.9**	10.70	"	"	3500	-	163	79	2.3
121	**108**	**1.05**	11.93	"	"	3100	-	146	90	1.3
100	**128**	**1.55**	14.50	"	"	3900	-	120	107	1.85
86	**149**	**0.91**	16.92	"	"	3700	-	103	125	1.1
78	**165**	**1.2**	18.52	"	"	4300	-	94	137	1.45
64	**200**	**1.0**	22.65	"	"	4650	-	77	167	1.2
51	**250**	**0.8**	28.76	"	"	5200	-	61	210	0.95
183	**72**	**3.2**	7.91	**BK20-../DHE09XA4**	50	1330	7600	220	59	3.9
146	**90**	**2.6**	9.91	"	"	1910	8300	176	74	3.1
130	**99**	**3.0**	11.14	"	"	3300	8100	157	82	3.7
124	**106**	**2.2**	11.69	"	"	2400	8800	149	88	2.6
98	**131**	**2.5**	14.75	"	"	3650	9000	118	109	3.0
83	**157**	**1.45**	17.42	"	"	3250	9000	100	130	1.8
75	**171**	**1.95**	19.39	"	"	4050	9000	90	143	2.3
60	**210**	**1.55**	24.29	"	"	4500	9000	72	179	1.85
51	**250**	**1.3**	28.66	"	"	4850	9000	61	210	1.55
39.5	**325**	**1.0**	36.69	"	"	5400	9000	47.5	270	1.2
34	**375**	**0.88**	42.70	"	"	5800	9000	41	310	1.05
121	**108**	**3.0**	11.93	**BK30-../DHE09XA4**	56	3650	12000	146	90	3.6
104	**125**	**2.6**	13.98	"	"	4050	12000	125	104	3.1
81	**159**	**2.8**	17.95	"	"	5300	12000	97	132	3.4
70	**186**	**1.7**	20.85	"	"	5000	12000	84	155	2.1
63	**200**	**2.3**	23.20	"	"	5900	12000	75	171	2.6
51	**250**	**1.8**	28.76	"	"	6500	12000	61	210	2.1
43	**295**	**1.55**	33.70	"	"	7000	12000	52	245	1.85

P = 1.5 kW

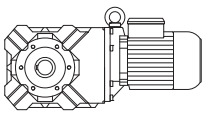

50 Hz			i	Type	m	F_{RN}	F_{RV}	60 Hz		
n_2	M_2	f_B						n_2	M_2	f_B
1/min	Nm				kg	N	N	1/min	Nm	
34	**370**	**1.2**	42.89	**BK30-../DHE09XA4**	"	7800	12000	41	310	1.45
29	**430**	**1.05**	50.27	"	"	8300	12000	35	360	1.25
24.5	**510**	**0.88**	59.27	"	"	8900	12000	29.5	425	1.05
51	**250**	**3.1**	28.59	**BK40-../DHE09XA4**	76	6300	17000	61	210	3.7
42	**305**	**2.6**	34.61	"	"	6900	17000	51	250	3.1
35.5	**360**	**2.2**	40.88	"	"	7600	17000	43	295	2.6
28.5	**440**	**1.75**	51.18	"	"	8400	17000	34	370	2.1
24.5	**510**	**1.55**	59.66	"	"	9100	17000	29.5	425	1.85
21	**590**	**1.3**	70.11	"	"	9800	17000	25	495	1.6
17.5	**710**	**1.1**	84.36	"	"	10700	17000	21	590	1.3
14	**860**	**0.91**	104.0	"	"	11700	17000	17	710	1.1
12.5	**970**	**0.8**	118.2	**BK40Z-../DHE09XA4**	80	11700	17000	15	810	0.96
30.5	**415**	**2.5**	47.50	**BK50-../DHE09XA4**	104	10100	25700	37	340	3.1
24	**520**	**2.0**	60.76	"	"	11400	26000	29	430	2.4
19.5	**630**	**1.65**	75.40	"	"	12600	26000	23.5	530	2.0
15.5	**790**	**1.35**	95.29	"	"	14100	26000	18.5	660	1.6
12.5	**970**	**1.1**	115.4	**BK50Z-../DHE09XA4**	109	14100	26000	15.5	780	1.35
9.4	**1260**	**0.83**	153.3	"	"	14100	26000	11.5	1030	1.0
18.5	**770**	**3.0**	78.13	**BK60-../DHE09XA4**	113	11900	34000	22.5	630	3.7
16.5	**860**	**2.7**	87.41	"	"	12900	34000	20	710	3.2
14.5	**980**	**2.3**	101.2	"	"	13900	34000	17.5	810	2.8
13	**1100**	**2.1**	113.2	"	"	15000	34000	15.5	920	2.5
12	**1190**	**1.95**	122.5	"	"	15500	34000	14.5	980	2.3
11	**1300**	**1.75**	137.0	"	"	16600	34000	13	1100	2.1
9.4	**1520**	**1.5**	153.7	**BK60Z-../DHE09XA4**	132	16600	34000	11.5	1240	1.85
7.9	**1810**	**1.25**	183.2	"	"	16600	34000	9.5	1500	1.55
7.1	**2000**	**1.15**	205.0	"	"	16600	34000	8.5	1680	1.35
6.1	**2300**	**1.0**	239.7	"	"	16600	34000	7.3	1960	1.15
5.4	**2650**	**0.87**	268.2	"	"	16600	34000	6.5	2200	1.05
8.2	**1740**	**3.0**	175.7	**BK70-../DHE09XA4**	199	24100	50000	10	1430	3.6
7.6	**1880**	**2.8**	190.4	**BK70Z-../DHE09XA4**	220	24100	50000	9.2	1550	3.4
6.4	**2200**	**2.4**	226.2	"	"	24100	50000	7.7	1860	2.8
5.6	**2550**	**2.0**	257.3	"	"	24100	50000	6.8	2100	2.5
5.0	**2850**	**1.8**	293.3	"	"	24100	50000	6.0	2350	2.2
4.4	**3250**	**1.6**	333.6	"	"	24100	50000	5.3	2700	1.95
3.8	**3750**	**1.4**	379.9	"	"	24100	50000	4.6	3100	1.7
3.4	**4200**	**1.25**	432.1	"	"	24100	50000	4.1	3450	1.5
2.9	**4900**	**1.05**	501.8	"	"	24100	50000	3.5	4050	1.3
2.6	**5500**	**0.95**	570.8	"	"	24100	50000	3.1	4600	1.15
2.3	**6200**	**0.84**	644.9	"	"	24100	50000	2.7	5300	0.98
3.8	**3750**	**3.1**	389.0	**BK80Z-../DHE09XA4**	349	30000	75000	4.5	3150	3.7
3.4	**4200**	**2.7**	435.7	"	"	30000	75000	4.0	3550	3.2
2.9	**4900**	**2.3**	499.5	"	"	30000	75000	3.5	4050	2.8
2.6	**5500**	**2.1**	559.5	"	"	30000	75000	3.2	4450	2.6
2.4	**5200**	**2.2**	607.8	**BK80G40-../DHE09XA4**	360	30000	75000	2.9	4150	2.8
2.2	**5600**	**2.1**	680.9	"	"	30000	75000	2.6	4650	2.5
2.0	**6300**	**1.85**	756.3	"	"	30000	75000	2.4	5100	2.3
1.7	**7500**	**1.55**	847.2	"	"	30000	75000	2.1	5900	1.95
1.5	**8600**	**1.35**	963.0	"	"	30000	75000	1.9	6600	1.75
1.4	**9200**	**1.25**	1079	"	"	30000	75000	1.7	7400	1.55
1.2	**10900**	**1.05**	1307	"	"	30000	75000	1.4	9200	1.25
1.1	**11800**	**0.97**	1425	"	"	30000	75000	1.3	9800	1.15
2.3	**6200**	**3.0**	637.7	**BK90Z-../DHE09XA4**	622	49400	120000	2.8	5100	3.6
2.1	**6800**	**2.7**	713.5	"	"	49400	120000	2.5	5700	3.2
1.8	**6600**	**2.8**	821.0	**BK90G50-../DHE09XA4**	633	49400	120000	2.2	5100	3.6
1.7	**7200**	**2.6**	882.3	"	"	49400	120000	2.0	5900	3.1
1.5	**8100**	**2.3**	1008	"	"	49400	120000	1.8	6600	2.8
1.3	**9500**	**1.95**	1127	"	"	49400	120000	1.6	7400	2.5
1.1	**11800**	**1.55**	1363	"	"	49400	120000	1.3	9800	1.9
0.95	**13500**	**1.35**	1579	"	"	49400	120000	1.2	10400	1.8
0.8	**16100**	**1.15**	1803	"	"	49400	120000	1.0	12600	1.45
0.75	**17100**	**1.1**	2016	"	"	49400	120000	0.9	13900	1.35

P = 2.2 kW

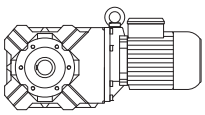

50 Hz			i	Type	m	F_{RN}	F_{RV}	60 Hz		
n_2	M_2	f_B						n_2	M_2	f_B
1/min	Nm				kg	N	N	1/min	Nm	
325	**59**	**1.6**	4.44	**BK10-../DHE09XA4C**	43	1890	-	395	48.5	1.95
240	**80**	**1.3**	6.02	"	"	2100	-	290	66	1.6
188	**102**	**1.15**	7.68	"	"	2400	-	230	84	1.35
154	**125**	**0.92**	9.40	"	"	2700	-	186	103	1.1
135	**140**	**1.3**	10.70	"	"	3500	-	163	116	1.55
100	**189**	**1.05**	14.50	"	"	3900	-	120	157	1.25
78	**240**	**0.83**	18.52	"	"	4300	-	94	200	1.0
320	**60**	**3.3**	4.54	**BK20-../DHE09XA4C**	52	520	6100	385	50	3.9
240	**80**	**2.7**	6.02	"	"	580	6800	290	66	3.3
183	**105**	**2.2**	7.91	"	"	1330	7600	220	87	2.7
146	**132**	**1.75**	9.91	"	"	1910	8300	176	109	2.1
130	**145**	**2.1**	11.14	"	"	3300	8100	157	120	2.5
124	**155**	**1.5**	11.69	"	"	2400	8800	149	129	1.8
98	**192**	**1.7**	14.75	"	"	3650	9000	118	160	2.1
83	**230**	**1.0**	17.42	"	"	3250	9000	100	191	1.2
75	**250**	**1.3**	19.39	"	"	4050	9000	90	210	1.55
60	**315**	**1.05**	24.29	"	"	4500	9000	72	260	1.25
51	**370**	**0.89**	28.66	"	"	4850	9000	61	305	1.1
305	**63**	**3.1**	4.73	**BK30-../DHE09XA4C**	58	1550	8800	370	52	3.7
240	**80**	**2.7**	6.02	"	"	1690	9600	290	66	3.2
194	**99**	**2.7**	7.45	"	"	2200	10400	235	82	3.3
150	**128**	**2.5**	9.63	"	"	3150	11500	181	106	3.0
127	**148**	**2.8**	11.39	"	"	4150	11000	153	123	3.4
121	**159**	**2.0**	11.93	"	"	3650	12000	146	132	2.4
104	**183**	**1.75**	13.98	"	"	4050	12000	125	152	2.1
100	**189**	**2.4**	14.50	"	"	4900	12000	120	157	2.9
81	**230**	**1.95**	17.95	"	"	5300	12000	97	194	2.3
70	**270**	**1.2**	20.85	"	"	5000	12000	84	225	1.4
63	**300**	**1.5**	23.20	"	"	5900	12000	75	250	1.8
51	**370**	**1.2**	28.76	"	"	6500	12000	61	305	1.5
43	**435**	**1.05**	33.70	"	"	7000	12000	52	360	1.25
34	**540**	**0.83**	42.89	"	"	7800	12000	41	455	0.99
122	**158**	**3.1**	11.86	**BK40-../DHE09XA4C**	79	1770	12200	147	131	3.8
80	**235**	**3.3**	18.05	"	"	4900	15300	97	194	4.0
65	**290**	**2.7**	22.44	"	"	5500	16500	78	240	3.3
51	**370**	**2.1**	28.59	"	"	6300	17000	61	305	2.6
42	**450**	**1.75**	34.61	"	"	6900	17000	51	370	2.1
35.5	**530**	**1.45**	40.88	"	"	7600	17000	43	435	1.8
28.5	**640**	**1.2**	51.18	"	"	8400	17000	34	540	1.45
24.5	**750**	**1.05**	59.66	"	"	9100	17000	29.5	620	1.25
21	**870**	**0.9**	70.11	"	"	9800	17000	25	730	1.05
81	**235**	**3.1**	17.92	**BK50-../DHE09XA4C**	107	4600	16800	98	195	3.7
55	**340**	**3.1**	26.51	"	"	7800	21200	66	285	3.7
41	**460**	**2.3**	35.21	"	"	8700	23100	49.5	380	2.8
30.5	**610**	**1.7**	47.50	"	"	10100	25700	37	500	2.1
24	**770**	**1.35**	60.76	"	"	11400	26000	29	630	1.65
19.5	**930**	**1.15**	75.40	"	"	12600	26000	23.5	770	1.35
15.5	**1160**	**0.91**	95.29	"	"	14100	26000	18.5	970	1.1
29	**720**	**3.2**	50.40	**BK60-../DHE09XA4C**	115	9100	29800	35	600	3.8
24.5	**850**	**2.7**	58.95	"	"	9900	31500	30	700	3.3
22	**950**	**2.4**	65.95	"	"	10900	33000	26.5	790	2.9
18.5	**1130**	**2.0**	78.13	"	"	11900	34000	22.5	930	2.5
16.5	**1270**	**1.8**	87.41	"	"	12900	34000	20	1050	2.2
14.5	**1440**	**1.6**	101.2	"	"	13900	34000	17.5	1200	1.9
13	**1610**	**1.45**	113.2	"	"	15000	34000	15.5	1350	1.7
12	**1750**	**1.3**	122.5	"	"	15500	34000	14.5	1440	1.6
11	**1910**	**1.2**	137.0	"	"	16600	34000	13	1610	1.45
9.4	**2200**	**1.05**	153.7	**BK60Z-../DHE09XA4C**	135	16600	34000	11.5	1820	1.25
7.9	**2650**	**0.87**	183.2	"	"	16600	34000	9.5	2200	1.05
12	**1750**	**3.0**	120.2	**BK70-../DHE09XA4C**	202	18600	50000	14.5	1440	3.6
11	**1910**	**2.7**	136.7	"	"	20700	50000	13	1610	3.2

P = 2.2 kW

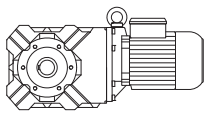

50 Hz			i	Type	m	F_{RN}	F_{RV}	60 Hz		
n_2	M_2	f_B						n_2	M_2	f_B
1/min	Nm				kg	N	N	1/min	Nm	
9.4	**2200**	**2.4**	154.4	**BK70-../DHE09XA4C**	"	21900	50000	11.5	1820	2.9
8.2	**2550**	**2.0**	175.7	"	"	24100	50000	10	2100	2.5
7.6	**2750**	**1.9**	190.4	**BK70Z-../DHE09XA4C**	223	24100	50000	9.2	2250	2.3
6.4	**3250**	**1.6**	226.2	"	"	24100	50000	7.7	2700	1.95
5.6	**3750**	**1.4**	257.3	"	"	24100	50000	6.8	3050	1.7
5.0	**4200**	**1.25**	293.3	"	"	24100	50000	6.0	3500	1.5
4.4	**4750**	**1.1**	333.6	"	"	24100	50000	5.3	3950	1.3
3.8	**5500**	**0.95**	379.9	"	"	24100	50000	4.6	4550	1.15
3.4	**6100**	**0.85**	432.1	"	"	24100	50000	4.1	5100	1.0
5.7	**3650**	**3.2**	253.3	**BK80Z-../DHE09XA4C**	351	30000	75000	6.9	3000	3.8
4.8	**4350**	**2.6**	300.6	"	"	30000	75000	5.8	3600	3.2
4.3	**4850**	**2.4**	336.7	"	"	30000	75000	5.2	4000	2.9
3.8	**5500**	**2.1**	389.0	"	"	30000	75000	4.5	4650	2.5
3.4	**6100**	**1.9**	435.7	"	"	30000	75000	4.0	5200	2.2
2.9	**7200**	**1.6**	499.5	"	"	30000	75000	3.5	6000	1.9
2.6	**8000**	**1.45**	559.5	"	"	30000	75000	3.2	6500	1.75
2.4	**8000**	**1.45**	607.8	**BK80G40-../DHE09XA4C**	363	30000	75000	2.9	6400	1.8
2.2	**8700**	**1.3**	680.9	"	"	30000	75000	2.6	7200	1.6
2.0	**9600**	**1.2**	756.3	"	"	30000	75000	2.4	7900	1.45
1.7	**11400**	**1.0**	847.2	"	"	30000	75000	2.1	9000	1.3
1.5	**13100**	**0.88**	963.0	"	"	30000	75000	1.9	10100	1.15
1.4	**13900**	**0.83**	1079	"	"	30000	75000	1.7	11300	1.0
3.4	**6100**	**3.0**	435.3	**BK90Z-../DHE09XA4C**	624	49400	120000	4.0	5200	3.6
2.9	**7200**	**2.6**	499.2	"	"	49400	120000	3.5	6000	3.1
2.6	**8000**	**2.3**	558.5	"	"	49400	120000	3.2	6500	2.8
2.3	**9100**	**2.0**	637.7	"	"	49400	120000	2.8	7500	2.5
2.1	**10000**	**1.85**	713.5	"	"	49400	120000	2.5	8400	2.2
1.8	**10300**	**1.8**	821.0	**BK90G50-../DHE09XA4C**	635	49400	120000	2.2	8200	2.3
1.7	**11100**	**1.65**	882.3	"	"	49400	120000	2.0	9300	2.0
1.5	**12600**	**1.45**	1008	"	"	49400	120000	1.8	10300	1.8
1.3	**14600**	**1.25**	1127	"	"	49400	120000	1.6	11600	1.6
1.1	**17800**	**1.05**	1363	"	"	49400	120000	1.3	14900	1.25

P = 3 kW

50 Hz			i	Type	m	F_{RN}	F_{RV}	60 Hz		
n_2	M_2	f_B						n_2	M_2	f_B
1/min	Nm				kg	N	N	1/min	Nm	
305	**86**	**2.3**	4.73	**BK30-../DHE11MA4**	65	1550	8800	370	71	2.7
240	**109**	**1.95**	6.02	"	"	1690	9600	290	90	2.4
194	**135**	**2.0**	7.45	"	"	2200	10400	235	112	2.4
150	**175**	**1.85**	9.63	"	"	3150	11500	181	145	2.2
127	**200**	**2.1**	11.39	"	"	4150	11000	153	168	2.5
121	**215**	**1.5**	11.93	"	"	3650	12000	146	180	1.8
104	**250**	**1.3**	13.98	"	"	4050	12000	125	205	1.55
100	**255**	**1.75**	14.50	"	"	4900	12000	120	210	2.1
81	**315**	**1.45**	17.95	"	"	5300	12000	97	265	1.7
63	**405**	**1.1**	23.20	"	"	5900	12000	75	340	1.3
51	**500**	**0.9**	28.76	"	"	6500	12000	61	420	1.05
155	**170**	**2.9**	9.31	**BK40-../DHE11MA4**	90	1040	11200	187	140	3.5
122	**215**	**2.3**	11.86	"	"	1770	12200	147	179	2.8
100	**255**	**3.1**	14.50	"	"	4500	14300	120	210	3.7
80	**320**	**2.4**	18.05	"	"	4900	15300	97	265	2.9
65	**395**	**1.95**	22.44	"	"	5500	16500	78	330	2.4
51	**500**	**1.55**	28.59	"	"	6300	17000	61	420	1.85
42	**610**	**1.3**	34.61	"	"	6900	17000	51	500	1.55
35.5	**720**	**1.1**	40.88	"	"	7600	17000	43	590	1.3
81	**320**	**2.3**	17.92	**BK50-../DHE11MA4**	120	4600	16800	98	265	2.7
75	**340**	**3.1**	19.33	"	"	6900	19200	91	280	3.8
55	**465**	**2.3**	26.51	"	"	7800	21200	66	390	2.7
41	**620**	**1.7**	35.21	"	"	8700	23100	49.5	520	2.0

P = 3 kW

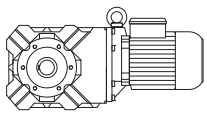

50 Hz			i	Type	m	F_{RN}	F_{RV}	60 Hz		
n_2	M_2	f_B						n_2	M_2	f_B
1/min	Nm				kg	N	N	1/min	Nm	
30.5	**830**	**1.25**	47.50	**BK50-../DHE11MA4**	"	10100	25700	37	680	1.55
24	**1050**	**1.0**	60.76	"	"	11400	26000	29	860	1.2
19.5	**1270**	**0.83**	75.40	"	"	12600	26000	23.5	1060	0.99
38.5	**740**	**3.1**	37.80	**BK60-../DHE11MA4**	130	7300	26500	46.5	610	3.8
32	**890**	**2.6**	45.05	"	"	8200	28300	39	730	3.2
29	**980**	**2.3**	50.40	"	"	9100	29800	35	810	2.8
24.5	**1160**	**2.0**	58.95	"	"	9900	31500	30	950	2.4
22	**1300**	**1.75**	65.95	"	"	10900	33000	26.5	1080	2.1
18.5	**1540**	**1.5**	78.13	"	"	11900	34000	22.5	1270	1.8
16.5	**1730**	**1.35**	87.41	"	"	12900	34000	20	1430	1.6
14.5	**1970**	**1.15**	101.2	"	"	13900	34000	17.5	1630	1.4
13	**2200**	**1.05**	113.2	"	"	15000	34000	15.5	1840	1.25
12	**2350**	**0.98**	122.5	"	"	15500	34000	14.5	1970	1.15
11	**2600**	**0.88**	137.0	"	"	16600	34000	13	2200	1.05
16	**1790**	**2.9**	90.96	**BK70-../DHE11MA4**	209	15300	49900	19.5	1460	3.6
14	**2000**	**2.6**	103.5	"	"	17200	50000	17	1680	3.1
12	**2350**	**2.2**	120.2	"	"	18600	50000	14.5	1970	2.6
11	**2600**	**2.0**	136.7	"	"	20700	50000	13	2200	2.4
9.4	**3000**	**1.75**	154.4	"	"	21900	50000	11.5	2450	2.1
8.2	**3450**	**1.5**	175.7	"	"	24100	50000	10	2850	1.8
7.6	**3750**	**1.4**	190.4	**BK70Z-../DHE11MA4**	236	24100	50000	9.2	3100	1.7
6.4	**4450**	**1.15**	226.2	"	"	24100	50000	7.7	3700	1.4
5.6	**5100**	**1.0**	257.3	"	"	24100	50000	6.8	4200	1.25
5.0	**5700**	**0.91**	293.3	"	"	24100	50000	6.0	4750	1.1
4.4	**6500**	**0.8**	333.6	"	"	24100	50000	5.3	5400	0.96
8.4	**3400**	**3.1**	171.5	**BK80-../DHE11MA4**	324	30000	75000	10.5	2700	3.9
8.2	**3450**	**3.3**	177.6	**BK80Z-../DHE11MA4**	366	30000	75000	9.8	2900	4.0
7.3	**3900**	**2.9**	198.9	"	"	30000	75000	8.8	3250	3.5
6.4	**4450**	**2.6**	226.1	"	"	30000	75000	7.7	3700	3.1
5.7	**5000**	**2.3**	253.3	"	"	30000	75000	6.9	4150	2.8
4.8	**5900**	**1.95**	300.6	"	"	30000	75000	5.8	4900	2.3
4.3	**6600**	**1.75**	336.7	"	"	30000	75000	5.2	5500	2.1
3.8	**7500**	**1.55**	389.0	"	"	30000	75000	4.5	6300	1.85
3.4	**8400**	**1.35**	435.7	"	"	30000	75000	4.0	7100	1.6
2.9	**9800**	**1.15**	499.5	"	"	30000	75000	3.5	8100	1.4
2.6	**11000**	**1.05**	559.5	"	"	30000	75000	3.2	8900	1.3
2.4	**11100**	**1.05**	607.8	**BK80G40-../DHE11MA4**	374	30000	75000	2.9	9100	1.25
2.2	**12100**	**0.95**	680.9	"	"	30000	75000	2.6	10100	1.15
2.0	**13500**	**0.85**	756.3	"	"	30000	75000	2.4	11100	1.05
4.9	**5800**	**3.2**	295.6	**BK90Z-../DHE11MA4**	632	49400	120000	5.9	4850	3.8
4.4	**6500**	**2.8**	330.7	"	"	49400	120000	5.3	5400	3.4
3.8	**7500**	**2.5**	389.1	"	"	49400	120000	4.5	6300	2.9
3.4	**8400**	**2.2**	435.3	"	"	49400	120000	4.0	7100	2.6
2.9	**9800**	**1.9**	499.2	"	"	49400	120000	3.5	8100	2.3
2.6	**11000**	**1.7**	558.5	"	"	49400	120000	3.2	8900	2.1
2.3	**12400**	**1.5**	637.7	"	"	49400	120000	2.8	10200	1.8
2.1	**13600**	**1.35**	713.5	"	"	49400	120000	2.5	11400	1.6
1.8	**14500**	**1.3**	821.0	**BK90G50-../DHE11MA4**	648	49400	120000	2.2	11600	1.6
1.7	**15600**	**1.2**	882.3	"	"	49400	120000	2.0	13100	1.4
1.5	**17700**	**1.05**	1008	"	"	49400	120000	1.8	14500	1.3
1.3	**20500**	**0.9**	1127	"	"	49400	120000	1.6	16300	1.15

BK-series bevel geared motors

Selection - bevel geared motors DHE - IE2

P = 4 kW

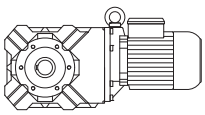

50 Hz			i	Type	m	F_{RN}	F_{RV}	60 Hz		
n_2	M_2	f_B						n_2	M_2	f_B
1/min	Nm				kg	N	N	1/min	Nm	
305	**115**	**1.7**	4.73	**BK30-../DHE11LA4**	76	1550	8800	370	94	2.1
240	**146**	**1.45**	6.02	"	"	1690	9600	290	121	1.75
194	**181**	**1.5**	7.45	"	"	2200	10400	235	149	1.8
150	**230**	**1.4**	9.63	"	"	3150	11500	181	194	1.65
127	**270**	**1.55**	11.39	"	"	4150	11000	153	220	1.9
121	**290**	**1.1**	11.93	"	"	3650	12000	146	240	1.35
104	**330**	**0.97**	13.98	"	"	4050	12000	125	275	1.15
100	**340**	**1.3**	14.50	"	"	4900	12000	120	285	1.6
81	**420**	**1.05**	17.95	"	"	5300	12000	97	350	1.3
63	**540**	**0.83**	23.20	"	"	5900	12000	75	455	0.99
240	**146**	**3.2**	6.02	**BK40-../DHE11LA4**	102	470	9800	290	121	3.9
193	**182**	**2.7**	7.49	"	"	750	10500	235	149	3.3
155	**225**	**2.2**	9.31	"	"	1040	11200	187	187	2.6
129	**265**	**2.7**	11.17	"	"	4100	13100	156	220	3.3
122	**285**	**1.75**	11.86	"	"	1770	12200	147	235	2.1
100	**340**	**2.3**	14.50	"	"	4500	14300	120	285	2.7
80	**425**	**1.85**	18.05	"	"	4900	15300	97	350	2.2
65	**520**	**1.5**	22.44	"	"	5500	16500	78	440	1.75
51	**670**	**1.15**	28.59	"	"	6300	17000	61	560	1.4
42	**810**	**0.96**	34.61	"	"	6900	17000	51	670	1.15
35.5	**960**	**0.81**	40.88	"	"	7600	17000	43	790	0.99
104	**330**	**3.2**	13.95	**BK50-../DHE11LA4**	132	6100	17400	125	275	3.8
81	**425**	**1.7**	17.92	"	"	4600	16800	98	350	2.1
75	**455**	**2.3**	19.33	"	"	6900	19200	91	375	2.8
55	**620**	**1.7**	26.51	"	"	7800	21200	66	520	2.0
41	**830**	**1.25**	35.21	"	"	8700	23100	49.5	690	1.5
30.5	**1110**	**0.95**	47.50	"	"	10100	25700	37	910	1.15
53	**720**	**3.2**	27.36	**BK60-../DHE11LA4**	142	5600	23200	64	590	3.9
43	**880**	**2.6**	33.78	"	"	6500	25200	52	730	3.2
38.5	**990**	**2.3**	37.80	"	"	7300	26500	46.5	820	2.8
32	**1190**	**1.95**	45.05	"	"	8200	28300	39	970	2.4
29	**1310**	**1.75**	50.40	"	"	9100	29800	35	1090	2.1
24.5	**1550**	**1.5**	58.95	"	"	9900	31500	30	1270	1.8
22	**1730**	**1.35**	65.95	"	"	10900	33000	26.5	1440	1.6
18.5	**2050**	**1.1**	78.13	"	"	11900	34000	22.5	1690	1.35
16.5	**2300**	**1.0**	87.41	"	"	12900	34000	20	1910	1.2
14.5	**2600**	**0.88**	101.2	"	"	13900	34000	17.5	2150	1.05
23.5	**1620**	**3.2**	61.60	**BK70-../DHE11LA4**	221	11500	42800	28.5	1340	3.9
21	**1810**	**2.9**	70.23	"	"	12500	44800	25	1520	3.4
18.5	**2050**	**2.5**	79.89	"	"	14300	47600	22	1730	3.0
16	**2350**	**2.2**	90.96	"	"	15300	49900	19.5	1950	2.7
14	**2700**	**1.95**	103.5	"	"	17200	50000	17	2200	2.4
12	**3150**	**1.65**	120.2	"	"	18600	50000	14.5	2600	2.0
11	**3450**	**1.5**	136.7	"	"	20700	50000	13	2900	1.8
9.4	**4050**	**1.3**	154.4	"	"	21900	50000	11.5	3300	1.6
8.2	**4650**	**1.1**	175.7	"	"	24100	50000	10	3800	1.35
7.6	**5000**	**1.05**	190.4	**BK70Z-../DHE11LA4**	247	24100	50000	9.2	4150	1.25
6.4	**5900**	**0.88**	226.2	"	"	24100	50000	7.7	4950	1.05
11	**3450**	**3.0**	131.6	**BK80-../DHE11LA4**	336	24900	75000	13.5	2800	3.8
9.5	**4000**	**2.6**	153.1	"	"	27200	75000	11.5	3300	3.2
8.4	**4500**	**2.3**	171.5	"	"	30000	75000	10.5	3600	2.9
8.2	**4650**	**2.5**	177.6	**BK80Z-../DHE11LA4**	378	30000	75000	9.8	3850	3.0
7.3	**5200**	**2.2**	198.9	"	"	30000	75000	8.8	4300	2.7
6.4	**5900**	**1.95**	226.1	"	"	30000	75000	7.7	4950	2.3
5.7	**6700**	**1.7**	253.3	"	"	30000	75000	6.9	5500	2.1
4.8	**7900**	**1.45**	300.6	"	"	30000	75000	5.8	6500	1.75
4.3	**8800**	**1.3**	336.7	"	"	30000	75000	5.2	7300	1.6
3.8	**10000**	**1.15**	389.0	"	"	30000	75000	4.5	8400	1.35
3.4	**11200**	**1.05**	435.7	"	"	30000	75000	4.0	9500	1.2
2.9	**13100**	**0.88**	499.5	"	"	30000	75000	3.5	10900	1.05

P = 4 kW

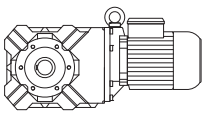

50 Hz			i	Type	m	F_{RN}	F_{RV}	60 Hz		
n_2	M_2	f_B						n_2	M_2	f_B
1/min	Nm				kg	N	N	1/min	Nm	
6.2	**6100**	**3.0**	234.6	**BK90Z-../DHE11LA4**	643	49400	120000	7.5	5000	3.7
5.5	**6900**	**2.7**	262.5	"	"	49400	120000	6.7	5700	3.2
4.9	**7700**	**2.4**	295.6	"	"	49400	120000	5.9	6400	2.9
4.4	**8600**	**2.2**	330.7	"	"	49400	120000	5.3	7200	2.6
3.8	**10000**	**1.85**	389.1	"	"	49400	120000	4.5	8400	2.2
3.4	**11200**	**1.65**	435.3	"	"	49400	120000	4.0	9500	1.95
2.9	**13100**	**1.4**	499.2	"	"	49400	120000	3.5	10900	1.7
2.6	**14600**	**1.25**	558.5	"	"	49400	120000	3.2	11900	1.55
2.3	**16600**	**1.1**	637.7	"	"	49400	120000	2.8	13600	1.35
2.1	**18100**	**1.0**	713.5	"	"	49400	120000	2.5	15200	1.2
1.8	**19800**	**0.93**	821.0	**BK90G50-../DHE11LA4**	660	49400	120000	2.2	16000	1.15
1.7	**21200**	**0.87**	882.3	"	"	49400	120000	2.0	17900	1.05

P = 5.5 kW

50 Hz			i	Type	m	F_{RN}	F_{RV}	60 Hz		
n_2	M_2	f_B						n_2	M_2	f_B
1/min	Nm				kg	N	N	1/min	Nm	
310	**155**	**1.25**	4.73	**BK30-../DHE11LA4C**	80	1550	8800	375	128	1.5
245	**197**	**1.1**	6.02	"	"	1690	9600	295	163	1.3
196	**245**	**1.1**	7.45	"	"	2200	10400	240	200	1.35
152	**315**	**1.0**	9.63	"	"	3150	11500	183	260	1.25
129	**365**	**1.15**	11.39	"	"	4150	11000	155	300	1.4
123	**390**	**0.82**	11.93	"	"	3650	12000	148	325	0.98
101	**465**	**0.97**	14.50	"	"	4900	12000	122	385	1.15
320	**151**	**2.9**	4.63	**BK40-../DHE11LA4C**	106	430	8900	385	125	3.4
245	**197**	**2.4**	6.02	"	"	470	9800	295	163	2.9
195	**245**	**2.0**	7.49	"	"	750	10500	235	205	2.4
157	**305**	**1.6**	9.31	"	"	1040	11200	190	250	1.95
131	**360**	**2.0**	11.17	"	"	4100	13100	158	295	2.4
124	**385**	**1.3**	11.86	"	"	1770	12200	149	320	1.55
101	**465**	**1.7**	14.50	"	"	4500	14300	122	385	2.0
81	**580**	**1.35**	18.05	"	"	4900	15300	98	480	1.65
66	**710**	**1.1**	22.44	"	"	5500	16500	79	590	1.3
52	**900**	**0.87**	28.59	"	"	6300	17000	62	760	1.05
151	**310**	**3.0**	9.73	**BK50-../DHE11LA4C**	136	5400	15400	181	260	3.6
146	**330**	**2.5**	10.00	"	"	1220	13200	176	270	3.0
105	**450**	**2.3**	13.95	"	"	6100	17400	127	370	2.8
82	**580**	**1.25**	17.92	"	"	4600	16800	99	480	1.5
76	**620**	**1.7**	19.33	"	"	6900	19200	92	510	2.1
56	**840**	**1.25**	26.51	"	"	7800	21200	67	700	1.5
41.5	**1130**	**0.93**	35.21	"	"	8700	23100	50	940	1.1
72	**720**	**3.1**	20.54	**BK60-../DHE11LA4C**	146	4400	20600	86	610	3.7
60	**870**	**2.6**	24.45	"	"	4850	22000	72	720	3.2
54	**970**	**2.4**	27.36	"	"	5600	23200	65	800	2.9
43.5	**1200**	**1.9**	33.78	"	"	6500	25200	53	990	2.3
39	**1340**	**1.7**	37.80	"	"	7300	26500	47	1110	2.1
32.5	**1610**	**1.45**	45.05	"	"	8200	28300	39.5	1320	1.75
29	**1810**	**1.25**	50.40	"	"	9100	29800	35	1500	1.55
25	**2100**	**1.1**	58.95	"	"	9900	31500	30	1750	1.3
22.5	**2300**	**1.0**	65.95	"	"	10900	33000	27	1940	1.2
19	**2750**	**0.84**	78.13	"	"	11900	34000	23	2250	1.0
32.5	**1610**	**3.2**	45.59	**BK70-../DHE11LA4C**	225	9000	37900	39	1340	3.8
27	**1940**	**2.7**	54.15	"	"	9900	40200	33	1590	3.3
24	**2150**	**2.4**	61.60	"	"	11500	42800	29	1810	2.9
21	**2500**	**2.1**	70.23	"	"	12500	44800	25.5	2050	2.5
18.5	**2800**	**1.85**	79.89	"	"	14300	47600	22.5	2300	2.3
16.5	**3150**	**1.65**	90.96	"	"	15300	49900	19.5	2650	1.95
14.5	**3600**	**1.45**	103.5	"	"	17200	50000	17.5	3000	1.75
12.5	**4200**	**1.25**	120.2	"	"	18600	50000	15	3500	1.5

P = 5.5 kW

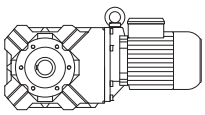

50 Hz			i	Type	m	F_{RN}	F_{RV}	60 Hz		
n_2	M_2	f_B						n_2	M_2	f_B
1/min	Nm				kg	N	N	1/min	Nm	
11	**4750**	**1.1**	136.7	**BK70-../DHE11LA4C**	"	20700	50000	13	4000	1.3
9.5	**5500**	**0.95**	154.4	"	"	21900	50000	11.5	4550	1.15
8.4	**6200**	**0.84**	175.7	"	"	24100	50000	10.5	5000	1.05
16	**3250**	**3.2**	91.53	**BK80-../DHE11LA4C**	340	18300	74200	19.5	2650	3.9
14.5	**3600**	**2.9**	102.5	"	"	20500	75000	17.5	3000	3.5
12.5	**4200**	**2.5**	117.5	"	"	22300	75000	15	3500	3.0
11.5	**4550**	**2.3**	131.6	"	"	24900	75000	13.5	3850	2.7
9.6	**5400**	**1.95**	153.1	"	"	27200	75000	11.5	4550	2.3
8.6	**6100**	**1.7**	171.5	"	"	30000	75000	10.5	5000	2.1
8.3	**6300**	**1.85**	177.6	**BK80Z-../DHE11LA4C**	382	30000	75000	10	5200	2.2
7.4	**7000**	**1.65**	198.9	"	"	30000	75000	8.9	5900	1.95
6.5	**8000**	**1.45**	226.1	"	"	30000	75000	7.8	6700	1.7
5.8	**9000**	**1.3**	253.3	"	"	30000	75000	7.0	7500	1.55
4.9	**10700**	**1.05**	300.6	"	"	30000	75000	5.9	8900	1.3
4.4	**11900**	**0.97**	336.7	"	"	30000	75000	5.3	9900	1.15
3.8	**13800**	**0.83**	389.0	"	"	30000	75000	4.6	11400	1.0
8.4	**6200**	**3.0**	174.7	**BK90Z-../DHE11LA4C**	647	49400	120000	10.5	5000	3.7
7.5	**7000**	**2.6**	195.4	"	"	49400	120000	9.1	5700	3.2
6.3	**8300**	**2.2**	234.6	"	"	49400	120000	7.6	6900	2.7
5.6	**9300**	**2.0**	262.5	"	"	49400	120000	6.8	7700	2.4
5.0	**10500**	**1.75**	295.6	"	"	49400	120000	6.0	8700	2.1
4.5	**11600**	**1.6**	330.7	"	"	49400	120000	5.4	9700	1.9
3.8	**13800**	**1.35**	389.1	"	"	49400	120000	4.6	11400	1.6
3.4	**15400**	**1.2**	435.3	"	"	49400	120000	4.1	12800	1.45
3.0	**17500**	**1.05**	499.2	"	"	49400	120000	3.6	14500	1.3
2.7	**19400**	**0.95**	558.5	"	"	49400	120000	3.2	16400	1.15
2.3	**22800**	**0.81**	637.7	"	"	49400	120000	2.8	18700	0.99

P = 7.5 kW

50 Hz			i	Type	m	F_{RN}	F_{RV}	60 Hz		
n_2	M_2	f_B						n_2	M_2	f_B
1/min	Nm				kg	N	N	1/min	Nm	
400	**164**	**4.4**	3.67	**BK50-../DHE13LA4**	146	115	9400	480	137	5.2
280	**235**	**3.5**	5.26	"	"	130	10700	335	196	4.1
205	**320**	**2.5**	7.29	"	"	620	11900	245	265	3.1
151	**425**	**2.2**	9.73	"	"	5400	15400	181	355	2.6
146	**450**	**1.8**	10.00	"	"	1220	13200	176	370	2.2
105	**610**	**1.7**	13.95	"	"	6100	17400	127	500	2.1
82	**790**	**0.92**	17.92	"	"	4600	16800	99	650	1.1
76	**840**	**1.25**	19.33	"	"	6900	19200	92	700	1.5
56	**1150**	**0.91**	26.51	"	"	7800	21200	67	960	1.1
135	**530**	**3.2**	10.82	**BK60-../DHE13LA4**	158	3200	17000	163	435	3.9
106	**670**	**2.9**	13.85	"	"	3850	18000	128	550	3.6
102	**700**	**2.8**	14.41	"	"	3650	18600	123	580	3.3
80	**890**	**2.5**	18.36	"	"	4000	19900	96	740	3.0
72	**990**	**2.3**	20.54	"	"	4400	20600	86	830	2.7
60	**1190**	**1.95**	24.45	"	"	4850	22000	72	990	2.3
54	**1320**	**1.75**	27.36	"	"	5600	23200	65	1100	2.1
43.5	**1640**	**1.4**	33.78	"	"	6500	25200	53	1350	1.7
39	**1830**	**1.25**	37.80	"	"	7300	26500	47	1520	1.5
32.5	**2200**	**1.05**	45.05	"	"	8200	28300	39.5	1810	1.25
29	**2450**	**0.94**	50.40	"	"	9100	29800	35	2000	1.15
25	**2850**	**0.81**	58.95	"	"	9900	31500	30	2350	0.98
47.5	**1500**	**3.0**	30.90	**BK70-../DHE13LA4**	237	7500	33600	57	1250	3.6
42	**1700**	**2.8**	35.15	"	"	8000	35000	51	1400	3.4
36.5	**1960**	**2.5**	40.08	"	"	8300	36300	44	1620	3.0
32.5	**2200**	**2.3**	45.59	"	"	9000	37900	39	1830	2.8

P = 7.5 kW

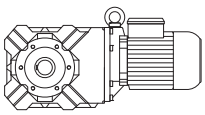

50 Hz			i	Type	m	F_{RN}	F_{RV}	60 Hz		
n_2	M_2	f_B						n_2	M_2	f_B
1/min	Nm				kg	N	N	1/min	Nm	
27	**2650**	**1.95**	54.15	**BK70-../DHE13LA4**	"	9900	40200	33	2150	2.4
24	**2950**	**1.75**	61.60	"	"	11500	42800	29	2450	2.1
21	**3400**	**1.55**	70.23	"	"	12500	44800	25.5	2800	1.85
18.5	**3850**	**1.35**	79.89	"	"	14300	47600	22.5	3150	1.65
16.5	**4300**	**1.2**	90.96	"	"	15300	49900	19.5	3650	1.4
14.5	**4900**	**1.05**	103.5	"	"	17200	50000	17.5	4050	1.3
12.5	**5700**	**0.91**	120.2	"	"	18600	50000	15	4750	1.1
11	**6500**	**0.8**	136.7	"	"	20700	50000	13	5500	0.95
24.5	**2900**	**3.2**	59.60	**BK80-../DHE13LA4**	351	15700	65500	30	2350	3.9
21	**3400**	**2.8**	70.72	"	"	16600	68700	25	2850	3.4
18.5	**3850**	**2.6**	79.22	"	"	17600	71300	22.5	3150	3.2
16	**4450**	**2.3**	91.53	"	"	18300	74200	19.5	3650	2.8
14.5	**4900**	**2.1**	102.5	"	"	20500	75000	17.5	4050	2.6
12.5	**5700**	**1.85**	117.5	"	"	22300	75000	15	4750	2.2
11.5	**6200**	**1.7**	131.6	"	"	24900	75000	13.5	5300	2.0
9.6	**7400**	**1.4**	153.1	"	"	27200	75000	11.5	6200	1.7
8.6	**8300**	**1.25**	171.5	"	"	30000	75000	10.5	6800	1.55
8.3	**8600**	**1.35**	177.6	**BK80Z-../DHE13LA4**	394	30000	75000	10	7100	1.6
7.4	**9600**	**1.2**	198.9	"	"	30000	75000	8.9	8000	1.45
6.5	**11000**	**1.05**	226.1	"	"	30000	75000	7.8	9100	1.25
5.8	**12300**	**0.93**	253.3	"	"	30000	75000	7.0	10200	1.15
12.5	**5700**	**2.9**	117.0	**BK90-../DHE13LA4**	603	39200	113000	15.5	4600	3.7
11.5	**6200**	**2.7**	130.9	"	"	42700	119400	13.5	5300	3.2
9.8	**7300**	**2.3**	149.5	"	"	45600	120000	12	5900	2.8
8.8	**8100**	**2.1**	167.2	"	"	49400	120000	11	6500	2.6
8.4	**8500**	**2.2**	174.7	**BK90Z-../DHE13LA4**	659	49400	120000	10.5	6800	2.7
7.5	**9500**	**1.95**	195.4	"	"	49400	120000	9.1	7800	2.4
6.3	**11300**	**1.65**	234.6	"	"	49400	120000	7.6	9400	1.95
5.6	**12700**	**1.45**	262.5	"	"	49400	120000	6.8	10500	1.75
5.0	**14300**	**1.3**	295.6	"	"	49400	120000	6.0	11900	1.55
4.5	**15900**	**1.15**	330.7	"	"	49400	120000	5.4	13200	1.4
3.8	**18800**	**0.98**	389.1	"	"	49400	120000	4.6	15500	1.2
3.4	**21000**	**0.88**	435.3	"	"	49400	120000	4.1	17400	1.05

P = 9.5 kW

50 Hz			i	Type	m	F_{RN}	F_{RV}	60 Hz		
n_2	M_2	f_B						n_2	M_2	f_B
1/min	Nm				kg	N	N	1/min	Nm	
405	**205**	**3.5**	3.67	**BK50-../DHE16MA4**	191	115	9400	485	172	4.2
280	**295**	**2.8**	5.26	"	"	130	10700	340	245	3.3
205	**405**	**2.0**	7.29	"	"	620	11900	245	340	2.4
152	**530**	**1.75**	9.73	"	"	5400	15400	182	445	2.1
147	**560**	**1.45**	10.00	"	"	1220	13200	177	470	1.75
106	**770**	**1.35**	13.95	"	"	6100	17400	127	640	1.65
77	**1060**	**0.99**	19.33	"	"	6900	19200	92	880	1.2
205	**440**	**3.3**	7.29	**BK60-../DHE16MA4**	203	2800	14900	245	370	4.0
136	**660**	**2.5**	10.82	"	"	3200	17000	164	550	3.0
107	**840**	**2.3**	13.85	"	"	3850	18000	128	700	2.8
103	**880**	**2.2**	14.41	"	"	3650	18600	123	730	2.6
81	**1120**	**1.95**	18.36	"	"	4000	19900	97	930	2.3
72	**1260**	**1.8**	20.54	"	"	4400	20600	87	1040	2.2
61	**1480**	**1.55**	24.45	"	"	4850	22000	73	1240	1.85
54	**1680**	**1.35**	27.36	"	"	5600	23200	65	1390	1.65
44	**2050**	**1.1**	33.78	"	"	6500	25200	53	1710	1.35
39	**2300**	**1.0**	37.80	"	"	7300	26500	47	1930	1.2
33	**2700**	**0.85**	45.05	"	"	8200	28300	39.5	2250	1.0
68	**1330**	**3.1**	21.88	**BK70-../DHE16MA4**	286	6500	30200	81	1120	3.6
60	**1510**	**2.8**	24.89	"	"	7000	31500	72	1260	3.4
48	**1890**	**2.4**	30.90	"	"	7500	33600	58	1560	2.9
42	**2150**	**2.2**	35.15	"	"	8000	35000	51	1770	2.7

P = 9.5 kW

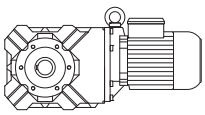

50 Hz			i	Type	m	F_{RN}	F_{RV}	60 Hz		
n_2	M_2	f_B						n_2	M_2	f_B
1/min	Nm				kg	N	N	1/min	Nm	
37	**2450**	**2.0**	40.08	**BK70-../DHE16MA4**	"	8300	36300	44.5	2000	2.4
32.5	**2750**	**1.85**	45.59	"	"	9000	37900	39	2300	2.2
27.5	**3250**	**1.6**	54.15	"	"	9900	40200	33	2700	1.95
24	**3750**	**1.4**	61.60	"	"	11500	42800	29	3100	1.7
21	**4300**	**1.2**	70.23	"	"	12500	44800	25.5	3550	1.45
18.5	**4900**	**1.05**	79.89	"	"	14300	47600	22.5	4000	1.3
16.5	**5400**	**0.96**	90.96	"	"	15300	49900	19.5	4650	1.1
14.5	**6200**	**0.84**	103.5	"	"	17200	50000	17.5	5100	1.0
35.5	**2550**	**3.2**	41.78	**BK80-../DHE16MA4**	396	13500	58700	42.5	2100	3.9
31.5	**2850**	**3.0**	46.80	"	"	14300	60900	38	2350	3.7
28	**3200**	**2.8**	53.21	"	"	14800	63100	33.5	2700	3.3
25	**3600**	**2.6**	59.60	"	"	15700	65500	30	3000	3.1
21	**4300**	**2.2**	70.72	"	"	16600	68700	25.5	3550	2.7
19	**4750**	**2.1**	79.22	"	"	17600	71300	22.5	4000	2.5
16.5	**5400**	**1.95**	91.53	"	"	18300	74200	19.5	4650	2.2
14.5	**6200**	**1.7**	102.5	"	"	20500	75000	17.5	5100	2.1
13	**6900**	**1.5**	117.5	"	"	22300	75000	15.5	5800	1.8
11.5	**7800**	**1.35**	131.6	"	"	24900	75000	13.5	6700	1.55
9.7	**9300**	**1.15**	153.1	"	"	27200	75000	12	7500	1.4
8.6	**10500**	**1.0**	171.5	"	"	30000	75000	10.5	8600	1.2
8.3	**10900**	**1.05**	177.6	**BK80Z-../DHE16MA4**	439	30000	75000	10	9000	1.3
7.4	**12200**	**0.94**	198.9	"	"	30000	75000	8.9	10100	1.15
6.6	**13700**	**0.84**	226.1	"	"	30000	75000	7.9	11400	1.0
16.5	**5400**	**3.1**	91.19	**BK90-../DHE16MA4**	649	33300	101000	19.5	4650	3.6
14.5	**6200**	**2.7**	102.0	"	"	36600	107000	17.5	5100	3.3
13	**6900**	**2.4**	117.0	"	"	39200	113000	15.5	5800	2.9
11.5	**7800**	**2.2**	130.9	"	"	42700	119400	14	6400	2.6
9.9	**9100**	**1.85**	149.5	"	"	45600	120000	12	7500	2.2
8.8	**10300**	**1.65**	167.2	"	"	49400	120000	11	8200	2.0
8.5	**10600**	**1.75**	174.7	**BK90Z-../DHE16MA4**	708	49400	120000	10.5	8600	2.2
7.6	**11900**	**1.55**	195.4	"	"	49400	120000	9.1	9900	1.85
6.3	**14400**	**1.3**	234.6	"	"	49400	120000	7.6	11900	1.55
5.6	**16200**	**1.15**	262.5	"	"	49400	120000	6.8	13300	1.4
5.0	**18100**	**1.0**	295.6	"	"	49400	120000	6.0	15100	1.25
4.5	**20100**	**0.92**	330.7	"	"	49400	120000	5.4	16800	1.1

P = 11 kW

50 Hz			i	Type	m	F_{RN}	F_{RV}	60 Hz		
n_2	M_2	f_B						n_2	M_2	f_B
1/min	Nm				kg	N	N	1/min	Nm	
405	**235**	**3.1**	3.67	**BK50-../DHE16LA4**	204	115	9400	485	199	3.6
280	**345**	**2.4**	5.26	"	"	130	10700	340	280	2.9
205	**470**	**1.75**	7.29	"	"	620	11900	245	390	2.1
152	**620**	**1.5**	9.73	"	"	5400	15400	182	510	1.85
147	**650**	**1.25**	10.00	"	"	1220	13200	177	540	1.5
106	**890**	**1.2**	13.95	"	"	6100	17400	127	740	1.4
77	**1220**	**0.86**	19.33	"	"	6900	19200	92	1020	1.05
205	**510**	**2.9**	7.29	**BK60-../DHE16LA4**	216	2800	14900	245	425	3.4
136	**770**	**2.2**	10.82	"	"	3200	17000	164	640	2.6
107	**980**	**2.0**	13.85	"	"	3850	18000	128	820	2.4
103	**1010**	**1.9**	14.41	"	"	3650	18600	123	850	2.3
81	**1290**	**1.7**	18.36	"	"	4000	19900	97	1080	2.0
72	**1450**	**1.55**	20.54	"	"	4400	20600	87	1200	1.9
61	**1720**	**1.35**	24.45	"	"	4850	22000	73	1430	1.6
54	**1940**	**1.2**	27.36	"	"	5600	23200	65	1610	1.45
44	**2350**	**0.98**	33.78	"	"	6500	25200	53	1980	1.15
39	**2650**	**0.87**	37.80	"	"	7300	26500	47	2200	1.05

P = 11 kW

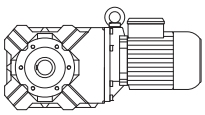

50 Hz			i	Type	m	F_{RN}	F_{RV}	60 Hz		
n_2	M_2	f_B						n_2	M_2	f_B
1/min	Nm				kg	N	N	1/min	Nm	
68	**1540**	**2.6**	21.88	**BK70-../DHE16LA4**	299	6500	30200	81	1290	3.2
60	**1750**	**2.4**	24.89	"	"	7000	31500	72	1450	2.9
48	**2150**	**2.1**	30.90	"	"	7500	33600	58	1810	2.5
42	**2500**	**1.9**	35.15	"	"	8000	35000	51	2050	2.3
37	**2800**	**1.75**	40.08	"	"	8300	36300	44.5	2350	2.1
32.5	**3200**	**1.6**	45.59	"	"	9000	37900	39	2650	1.95
27.5	**3800**	**1.35**	54.15	"	"	9900	40200	33	3150	1.65
24	**4350**	**1.2**	61.60	"	"	11500	42800	29	3600	1.45
21	**5000**	**1.05**	70.23	"	"	12500	44800	25.5	4100	1.25
18.5	**5600**	**0.93**	79.89	"	"	14300	47600	22.5	4650	1.1
16.5	**6300**	**0.83**	90.96	"	"	15300	49900	19.5	5300	0.98
43	**2400**	**3.3**	34.22	**BK80-../DHE16LA4**	408	12600	55400	52	2000	3.9
35.5	**2950**	**2.8**	41.78	"	"	13500	58700	42.5	2450	3.4
31.5	**3300**	**2.6**	46.80	"	"	14300	60900	38	2750	3.1
28	**3750**	**2.4**	53.21	"	"	14800	63100	33.5	3100	2.9
25	**4200**	**2.2**	59.60	"	"	15700	65500	30	3500	2.6
21	**5000**	**1.95**	70.72	"	"	16600	68700	25.5	4100	2.3
19	**5500**	**1.85**	79.22	"	"	17600	71300	22.5	4650	2.2
16.5	**6300**	**1.65**	91.53	"	"	18300	74200	19.5	5300	1.95
14.5	**7200**	**1.45**	102.5	"	"	20500	75000	17.5	6000	1.75
13	**8000**	**1.3**	117.5	"	"	22300	75000	15.5	6700	1.55
11.5	**9100**	**1.15**	131.6	"	"	24900	75000	13.5	7700	1.35
9.7	**10800**	**0.97**	153.1	"	"	27200	75000	12	8700	1.2
8.6	**12200**	**0.86**	171.5	"	"	30000	75000	10.5	10000	1.05
8.3	**12600**	**0.91**	177.6	**BK80Z-../DHE16LA4**	452	30000	75000	10	10500	1.1
7.4	**14100**	**0.82**	198.9	"	"	30000	75000	8.9	11800	0.97
19	**5500**	**3.1**	77.51	**BK90-../DHE16LA4**	662	30300	94400	23	4550	3.7
16.5	**6300**	**2.7**	91.19	"	"	33300	101000	19.5	5300	3.2
14.5	**7200**	**2.3**	102.0	"	"	36600	107000	17.5	6000	2.8
13	**8000**	**2.1**	117.0	"	"	39200	113000	15.5	6700	2.5
11.5	**9100**	**1.85**	130.9	"	"	42700	119400	14	7500	2.2
9.9	**10600**	**1.6**	149.5	"	"	45600	120000	12	8700	1.95
8.8	**11900**	**1.4**	167.2	"	"	49400	120000	11	9500	1.75
8.5	**12300**	**1.5**	174.7	**BK90Z-../DHE16LA4**	721	49400	120000	10.5	10000	1.85
7.6	**13800**	**1.35**	195.4	"	"	49400	120000	9.1	11500	1.6
6.3	**16600**	**1.1**	234.6	"	"	49400	120000	7.6	13800	1.35
5.6	**18700**	**0.99**	262.5	"	"	49400	120000	6.8	15400	1.2
5.0	**21000**	**0.88**	295.6	"	"	49400	120000	6.0	17500	1.05

P = 15 kW

50 Hz			i	Type	m	F_{RN}	F_{RV}	60 Hz		
n_2	M_2	f_B						n_2	M_2	f_B
1/min	Nm				kg	N	N	1/min	Nm	
405	**325**	**2.2**	3.67	**BK50-../DHE16XA4**	214	115	9400	485	270	2.7
280	**470**	**1.75**	5.26	"	"	130	10700	340	385	2.1
205	**640**	**1.25**	7.29	"	"	620	11900	245	530	1.55
152	**840**	**1.1**	9.73	"	"	5400	15400	182	700	1.35
147	**890**	**0.91**	10.00	"	"	1220	13200	177	740	1.1
106	**1210**	**0.87**	13.95	"	"	6100	17400	127	1010	1.05
205	**690**	**2.1**	7.29	**BK60-../DHE16XA4**	226	2800	14900	245	580	2.5
136	**1050**	**1.6**	10.82	"	"	3200	17000	164	870	1.95
107	**1330**	**1.5**	13.85	"	"	3850	18000	128	1110	1.8
103	**1390**	**1.4**	14.41	"	"	3650	18600	123	1160	1.65
81	**1760**	**1.25**	18.36	"	"	4000	19900	97	1470	1.5
72	**1980**	**1.15**	20.54	"	"	4400	20600	87	1640	1.35
61	**2300**	**1.0**	24.45	"	"	4850	22000	73	1960	1.15
54	**2650**	**0.87**	27.36	"	"	5600	23200	65	2200	1.05

P = 15 kW

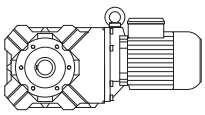

50 Hz			i	Type	m	F_{RN}	F_{RV}	60 Hz		
n_2	M_2	f_B						n_2	M_2	f_B
1/min	Nm				kg	N	N	1/min	Nm	
68	**2100**	**1.95**	21.88	**BK70-../DHE16XA4**	309	6500	30200	81	1760	2.3
60	**2350**	**1.8**	24.89	"	"	7000	31500	72	1980	2.2
48	**2950**	**1.55**	30.90	"	"	7500	33600	58	2450	1.85
42	**3400**	**1.4**	35.15	"	"	8000	35000	51	2800	1.7
37	**3850**	**1.25**	40.08	"	"	8300	36300	44.5	3200	1.5
32.5	**4400**	**1.15**	45.59	"	"	9000	37900	39	3650	1.4
27.5	**5200**	**1.0**	54.15	"	"	9900	40200	33	4300	1.2
24	**5900**	**0.88**	61.60	"	"	11500	42800	29	4900	1.05
48.5	**2950**	**2.5**	30.56	**BK80-../DHE16XA4**	418	11900	53400	58	2450	3.1
43	**3300**	**2.4**	34.22	"	"	12600	55400	52	2750	2.8
35.5	**4000**	**2.1**	41.78	"	"	13500	58700	42.5	3350	2.5
31.5	**4500**	**1.9**	46.80	"	"	14300	60900	38	3750	2.3
28	**5100**	**1.75**	53.21	"	"	14800	63100	33.5	4250	2.1
25	**5700**	**1.6**	59.60	"	"	15700	65500	30	4750	1.95
21	**6800**	**1.4**	70.72	"	"	16600	68700	25.5	5600	1.7
19	**7500**	**1.35**	79.22	"	"	17600	71300	22.5	6300	1.6
16.5	**8600**	**1.2**	91.53	"	"	18300	74200	19.5	7300	1.4
14.5	**9800**	**1.05**	102.5	"	"	20500	75000	17.5	8100	1.3
13	**11000**	**0.95**	117.5	"	"	22300	75000	15.5	9200	1.15
11.5	**12400**	**0.85**	131.6	"	"	24900	75000	13.5	10600	0.99
27	**5300**	**3.0**	54.98	**BK90-../DHE16XA4**	672	24000	81000	32.5	4400	3.7
24	**5900**	**2.8**	61.52	"	"	25500	84600	29	4900	3.4
21.5	**6600**	**2.5**	69.27	"	"	27200	88900	26	5500	3.1
19	**7500**	**2.2**	77.51	"	"	30300	94400	23	6200	2.7
16.5	**8600**	**1.95**	91.19	"	"	33300	101000	19.5	7300	2.3
14.5	**9800**	**1.7**	102.0	"	"	36600	107000	17.5	8100	2.1
13	**11000**	**1.55**	117.0	"	"	39200	113000	15.5	9200	1.85
11.5	**12400**	**1.35**	130.9	"	"	42700	119400	14	10200	1.65
9.9	**14400**	**1.15**	149.5	"	"	45600	120000	12	11900	1.4
8.8	**16200**	**1.05**	167.2	"	"	49400	120000	11	13000	1.3
8.5	**16800**	**1.1**	174.7	**BK90Z-../DHE16XA4**	731	49400	120000	10.5	13600	1.35
7.6	**18800**	**0.98**	195.4	"	"	49400	120000	9.1	15700	1.2
6.3	**22700**	**0.81**	234.6	"	"	49400	120000	7.6	18800	0.98

P = 18.5 kW

50 Hz			i	Type	m	F_{RN}	F_{RV}	60 Hz		
n_2	M_2	f_B						n_2	M_2	f_B
1/min	Nm				kg	N	N	1/min	Nm	
405	**400**	**1.8**	3.67	**BK50-../DHE18LA4**	282	115	9400	485	335	2.1
280	**580**	**1.4**	5.26	"	"	130	10700	340	475	1.7
205	**790**	**1.05**	7.29	"	"	620	11900	245	660	1.25
152	**1040**	**0.9**	9.73	"	"	5400	15400	182	870	1.05
205	**860**	**1.7**	7.29	**BK60-../DHE18LA4**	289	2800	14900	245	720	2.0
136	**1290**	**1.3**	10.82	"	"	3200	17000	164	1070	1.55
107	**1650**	**1.2**	13.85	"	"	3850	18000	128	1380	1.45
103	**1710**	**1.15**	14.41	"	"	3650	18600	123	1430	1.35
81	**2150**	**1.0**	18.36	"	"	4000	19900	97	1820	1.2
72	**2450**	**0.92**	20.54	"	"	4400	20600	87	2000	1.15
61	**2850**	**0.81**	24.45	"	"	4850	22000	73	2400	0.96
97	**1820**	**1.7**	15.16	**BK70-../DHE18LA4**	366	5600	25800	117	1510	2.0
86	**2050**	**1.7**	17.24	"	"	6500	29200	103	1710	2.0
68	**2550**	**1.6**	21.88	"	"	6500	30200	81	2150	1.9
60	**2900**	**1.45**	24.89	"	"	7000	31500	72	2450	1.75
48	**3650**	**1.25**	30.90	"	"	7500	33600	58	3000	1.5
42	**4200**	**1.15**	35.15	"	"	8000	35000	51	3450	1.35
37	**4750**	**1.05**	40.08	"	"	8300	36300	44.5	3950	1.25
32.5	**5400**	**0.95**	45.59	"	"	9000	37900	39	4500	1.15
27.5	**6400**	**0.81**	54.15	"	"	9900	40200	33	5300	0.98

P = 18.5 kW

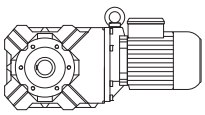

50 Hz			i	Type	m	F_{RN}	F_{RV}	60 Hz		
n_2	M_2	f_B						n_2	M_2	f_B
1/min	Nm				kg	N	N	1/min	Nm	
93	**1890**	**2.5**	15.88	**BK80-../DHE18LA4**	480	8400	38600	112	1570	3.0
83	**2100**	**2.5**	17.79	"	"	9400	42100	100	1760	3.0
67	**2600**	**2.6**	22.19	"	"	10500	48500	80	2200	3.1
60	**2900**	**2.4**	24.85	"	"	11200	50400	72	2450	2.9
48.5	**3600**	**2.1**	30.56	"	"	11900	53400	58	3000	2.5
43	**4100**	**1.9**	34.22	"	"	12600	55400	52	3350	2.3
35.5	**4950**	**1.65**	41.78	"	"	13500	58700	42.5	4150	2.0
31.5	**5600**	**1.55**	46.80	"	"	14300	60900	38	4600	1.85
28	**6300**	**1.4**	53.21	"	"	14800	63100	33.5	5200	1.7
25	**7000**	**1.3**	59.60	"	"	15700	65500	30	5800	1.6
21	**8400**	**1.15**	70.72	"	"	16600	68700	25.5	6900	1.4
19	**9200**	**1.1**	79.22	"	"	17600	71300	22.5	7800	1.3
16.5	**10700**	**0.97**	91.53	"	"	18300	74200	19.5	9000	1.15
14.5	**12100**	**0.87**	102.5	"	"	20500	75000	17.5	10000	1.05
36	**4900**	**3.0**	40.94	**BK90-../DHE18LA4**	734	21400	73100	43.5	4050	3.7
32.5	**5400**	**2.9**	45.80	"	"	22700	76300	39	4500	3.4
27	**6500**	**2.5**	54.98	"	"	24000	81000	32.5	5400	3.0
24	**7300**	**2.3**	61.52	"	"	25500	84600	29	6000	2.8
21.5	**8200**	**2.0**	69.27	"	"	27200	88900	26	6700	2.5
19	**9200**	**1.85**	77.51	"	"	30300	94400	23	7600	2.2
16.5	**10700**	**1.55**	91.19	"	"	33300	101000	19.5	9000	1.85
14.5	**12100**	**1.4**	102.0	"	"	36600	107000	17.5	10000	1.7
13	**13500**	**1.25**	117.0	"	"	39200	113000	15.5	11300	1.5
11.5	**15300**	**1.1**	130.9	"	"	42700	119400	14	12600	1.35
9.9	**17800**	**0.94**	149.5	"	"	45600	120000	12	14700	1.15
8.8	**20000**	**0.84**	167.2	"	"	49400	120000	11	16000	1.05
8.5	**20700**	**0.89**	174.7	**BK90Z-../DHE18LA4**	788	49400	120000	10.5	16800	1.1
7.6	**23200**	**0.8**	195.4	"	"	49400	120000	9.1	19400	0.95

P = 22 kW

50 Hz			i	Type	m	F_{RN}	F_{RV}	60 Hz		
n_2	M_2	f_B						n_2	M_2	f_B
1/min	Nm				kg	N	N	1/min	Nm	
405	**475**	**1.5**	3.67	**BK50-../DHE18XA4**	300	115	9400	485	395	1.8
280	**690**	**1.2**	5.26	"	"	130	10700	340	560	1.45
205	**940**	**0.86**	7.29	"	"	620	11900	245	780	1.05
205	**1020**	**1.45**	7.29	**BK60-../DHE18XA4**	307	2800	14900	245	850	1.7
136	**1540**	**1.1**	10.82	"	"	3200	17000	164	1280	1.3
107	**1960**	**1.0**	13.85	"	"	3850	18000	128	1640	1.2
103	**2000**	**0.96**	14.41	"	"	3650	18600	123	1700	1.15
81	**2550**	**0.86**	18.36	"	"	4000	19900	97	2150	1.0
97	**2150**	**1.45**	15.16	**BK70-../DHE18XA4**	384	5600	25800	117	1790	1.7
86	**2400**	**1.45**	17.24	"	"	6500	29200	103	2000	1.75
68	**3050**	**1.35**	21.88	"	"	6500	30200	81	2550	1.6
60	**3500**	**1.2**	24.89	"	"	7000	31500	72	2900	1.45
48	**4350**	**1.05**	30.90	"	"	7500	33600	58	3600	1.25
42	**5000**	**0.95**	35.15	"	"	8000	35000	51	4100	1.15
37	**5600**	**0.87**	40.08	"	"	8300	36300	44.5	4700	1.05
32.5	**6400**	**0.8**	45.59	"	"	9000	37900	39	5300	0.97
93	**2250**	**2.1**	15.88	**BK80-../DHE18XA4**	498	8400	38600	112	1870	2.6
83	**2500**	**2.1**	17.79	"	"	9400	42100	100	2100	2.5
67	**3100**	**2.2**	22.19	"	"	10500	48500	80	2600	2.6
60	**3500**	**2.0**	24.85	"	"	11200	50400	72	2900	2.4
48.5	**4300**	**1.75**	30.56	"	"	11900	53400	58	3600	2.1
43	**4850**	**1.6**	34.22	"	"	12600	55400	52	4000	1.95
35.5	**5900**	**1.4**	41.78	"	"	13500	58700	42.5	4900	1.7
31.5	**6600**	**1.3**	46.80	"	"	14300	60900	38	5500	1.55
28	**7500**	**1.2**	53.21	"	"	14800	63100	33.5	6200	1.45
25	**8400**	**1.1**	59.60	"	"	15700	65500	30	7000	1.3
21	**10000**	**0.96**	70.72	"	"	16600	68700	25.5	8200	1.15

BK-series bevel geared motors

Selection - bevel geared motors DHE - IE2

P = 22 kW

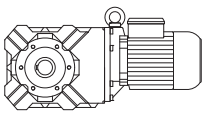

50 Hz			i	Type	m	F_{RN}	F_{RV}	60 Hz		
n_2	M_2	f_B						n_2	M_2	f_B
1/min	Nm				kg	N	N	1/min	Nm	
19	**11000**	**0.91**	79.22	"	"	17600	71300	22.5	9300	1.1
16.5	**12700**	**0.82**	91.53	"	"	18300	74200	19.5	10700	0.97
48.5	**4300**	**3.1**	30.47	**BK90-../DHE18XA4**	752	19100	65900	59	3550	3.8
43.5	**4800**	**2.9**	34.09	"	"	20300	68800	52	4000	3.5
36	**5800**	**2.5**	40.94	"	"	21400	73100	43.5	4800	3.1
32.5	**6400**	**2.4**	45.80	"	"	22700	76300	39	5300	2.9
27	**7700**	**2.1**	54.98	"	"	24000	81000	32.5	6400	2.5
24	**8700**	**1.95**	61.52	"	"	25500	84600	29	7200	2.3
21.5	**9700**	**1.75**	69.27	"	"	27200	88900	26	8000	2.1
19	**11000**	**1.55**	77.51	"	"	30300	94400	23	9100	1.85
16.5	**12700**	**1.3**	91.19	"	"	33300	101000	19.5	10700	1.55
14.5	**14400**	**1.15**	102.0	"	"	36600	107000	17.5	12000	1.4
13	**16100**	**1.05**	117.0	"	"	39200	113000	15.5	13500	1.25
11.5	**18200**	**0.92**	130.9	"	"	42700	119400	14	15000	1.1

P = 30 kW

50 Hz			i	Type	m	F_{RN}	F_{RV}	60 Hz		
n_2	M_2	f_B						n_2	M_2	f_B
1/min	Nm				kg	N	N	1/min	Nm	
98	**2900**	**1.05**	15.16	**BK70-../DHENF20LG4**	568	5600	25800	119	2400	1.3
86	**3300**	**1.05**	17.24	"	"	6500	29200	104	2750	1.25
68	**4200**	**0.97**	21.88	"	"	6500	30200	82	3450	1.2
60	**4750**	**0.9**	24.89	"	"	7000	31500	72	3950	1.1
94	**3000**	**1.6**	15.88	**BK80-../DHENF20LG4**	685	8400	38600	113	2500	1.9
84	**3400**	**1.55**	17.79	"	"	9400	42100	101	2800	1.9
67	**4250**	**1.6**	22.19	"	"	10500	48500	81	3500	1.95
60	**4750**	**1.5**	24.85	"	"	11200	50400	73	3900	1.8
48.5	**5900**	**1.25**	30.56	"	"	11900	53400	59	4850	1.55
43.5	**6500**	**1.2**	34.22	"	"	12600	55400	53	5400	1.45
35.5	**8000**	**1.05**	41.78	"	"	13500	58700	43	6600	1.25
32	**8900**	**0.96**	46.80	"	"	14300	60900	38.5	7400	1.15
28	**10200**	**0.87**	53.21	"	"	14800	63100	34	8400	1.05
25	**11400**	**0.81**	59.60	"	"	15700	65500	30.5	9300	0.99
82	**3450**	**3.3**	18.07	**BK90-../DHENF20LG4**	938	15600	54400	100	2850	4.0
74	**3850**	**3.1**	20.21	"	"	16600	56700	89	3200	3.8
67	**4250**	**2.9**	22.29	"	"	16900	59100	81	3500	3.5
60	**4750**	**2.7**	24.94	"	"	18000	61700	72	3950	3.3
49	**5800**	**2.3**	30.47	"	"	19100	65900	59	4850	2.8
43.5	**6500**	**2.2**	34.09	"	"	20300	68800	53	5400	2.6
36.5	**7800**	**1.9**	40.94	"	"	21400	73100	44	6500	2.3
32.5	**8800**	**1.75**	45.80	"	"	22700	76300	39.5	7200	2.1
27	**10600**	**1.5**	54.98	"	"	24000	81000	33	8600	1.9
24.5	**11600**	**1.45**	61.52	"	"	25500	84600	29.5	9700	1.75
21.5	**13300**	**1.25**	69.27	"	"	27200	88900	26	11000	1.55
19.5	**14600**	**1.15**	77.51	"	"	30300	94400	23.5	12100	1.4
16.5	**17300**	**0.97**	91.19	"	"	33300	101000	20	14300	1.15
15	**19100**	**0.88**	102.0	"	"	36600	107000	18	15900	1.05

P = 37 kW

50 Hz			i	Type	m	F_{RN}	F_{RV}	60 Hz		
n_2	M_2	f_B						n_2	M_2	f_B
1/min	Nm				kg	N	N	1/min	Nm	
94	**3750**	**1.3**	15.88	**BK80-..-C/DHENF22SG4**	802	8400	38600	113	3100	1.55
84	**4200**	**1.25**	17.79	"	"	9400	42100	101	3450	1.5
67	**5200**	**1.3**	22.19	"	"	10500	48500	81	4350	1.55
60	**5800**	**1.2**	24.85	"	"	11200	50400	73	4800	1.5
48.5	**7200**	**1.05**	30.56	"	"	11900	53400	59	5900	1.25

P = 37 kW

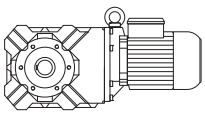

50 Hz			i	Type	m	F_{RN}	F_{RV}	60 Hz		
n_2	M_2	f_B						n_2	M_2	f_B
1/min	Nm				kg	N	N	1/min	Nm	
82	**4300**	**2.7**	18.07	**BK90-..-C/DHENF22SG4**	1056	15600	54400	100	3500	3.3
74	**4750**	**2.5**	20.21	"	"	16600	56700	89	3950	3.0
67	**5200**	**2.4**	22.29	"	"	16900	59100	81	4350	2.8
60	**5800**	**2.2**	24.94	"	"	18000	61700	72	4900	2.6
49	**7200**	**1.9**	30.47	"	"	19100	65900	59	5900	2.3
43.5	**8100**	**1.75**	34.09	"	"	20300	68800	53	6600	2.1
36.5	**9600**	**1.55**	40.94	"	"	21400	73100	44	8000	1.85
32.5	**10800**	**1.45**	45.80	"	"	22700	76300	39.5	8900	1.75
27	**13000**	**1.25**	54.98	"	"	24000	81000	33	10700	1.5
24.5	**14400**	**1.15**	61.52	"	"	25500	84600	29.5	11900	1.4
21.5	**16400**	**1.0**	69.27	"	"	27200	88900	26	13500	1.25

P = 45 kW

50 Hz			i	Type	m	F_{RN}	F_{RV}	60 Hz		
n_2	M_2	f_B						n_2	M_2	f_B
1/min	Nm				kg	N	N	1/min	Nm	
94	**4550**	**1.05**	15.88	**BK80-..-C/DHENF22MG4**	842	8400	38600	113	3800	1.25
84	**5100**	**1.05**	17.79	"	"	9400	42100	101	4250	1.25
67	**6400**	**1.05**	22.19	"	"	10500	48500	81	5300	1.3
60	**7100**	**1.0**	24.85	"	"	11200	50400	73	5800	1.2
82	**5200**	**2.2**	18.07	**BK90-..-C/DHENF22MG4**	1096	15600	54400	100	4250	2.7
74	**5800**	**2.1**	20.21	"	"	16600	56700	89	4800	2.5
67	**6400**	**1.9**	22.29	"	"	16900	59100	81	5300	2.3
60	**7100**	**1.8**	24.94	"	"	18000	61700	72	5900	2.2
49	**8700**	**1.55**	30.47	"	"	19100	65900	59	7200	1.9
43.5	**9800**	**1.45**	34.09	"	"	20300	68800	53	8100	1.75
36.5	**11700**	**1.25**	40.94	"	"	21400	73100	44	9700	1.5
32.5	**13200**	**1.15**	45.80	"	"	22700	76300	39.5	10800	1.45
27	**15900**	**1.0**	54.98	"	"	24000	81000	33	13000	1.25

P = 55 kW

50 Hz			i	Type	m	F_{RN}	F_{RV}	60 Hz		
n_2	M_2	f_B						n_2	M_2	f_B
1/min	Nm				kg	N	N	1/min	Nm	
82	**6400**	**1.8**	18.07	**BK90-..-C/DHENF25SG4**	1152	15600	54400	100	5200	2.2
74	**7000**	**1.7**	20.21	"	"	16600	56700	89	5900	2.0
67	**7800**	**1.6**	22.29	"	"	16900	59100	81	6400	1.9
60	**8700**	**1.5**	24.94	"	"	18000	61700	72	7200	1.8
49	**10700**	**1.25**	30.47	"	"	19100	65900	59	8900	1.5
43.5	**12000**	**1.2**	34.09	"	"	20300	68800	53	9900	1.4
36.5	**14300**	**1.05**	40.94	"	"	21400	73100	44	11900	1.25

P = 75 kW

50 Hz			i	Type	m	F_{RN}	F_{RV}	60 Hz		
n_2	M_2	f_B						n_2	M_2	f_B
1/min	Nm				kg	N	N	1/min	Nm	
82	**8700**	**1.3**	18.07	**BK90-..-C/DHENF25MG4**	1152	15600	54400	100	7100	1.6
74	**9600**	**1.25**	20.21	"	"	16600	56700	89	8000	1.5
67	**10600**	**1.15**	22.29	"	"	16900	59100	81	8800	1.4
60	**11900**	**1.1**	24.94	"	"	18000	61700	72	9900	1.3

BK-series bevel geared motors

Selection - bevel gearbox with SN input

M = 63 .. 80 Nm

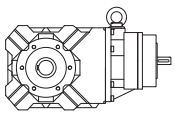

50 Hz			i	Type	F_{RN}	F_{RV}	permissible input speed [1/min]	
n_2	M_2	M_1					for mounting position	
(4 pole)	f_B=1,0						H1,H2,H3,H4,H5,B5,V1 B3,B6,B7,B8,V5	H6,V3,V6
1/min	Nm	Nm			N	N		
22	63,5	1	63,33	**BK06-..-SN**	1700		3600	1800
26	68	1,3	54,38	"	1600		"	"
29	80	1,7	47,78	"	1500		"	"
37	80	2,1	38,18	"	1380		"	"
42	80	2,4	33,33	"	1320		"	"
53	80	3	26,36	"	1230		"	"
65	80	3,7	21,54	"	1150		"	"
78	80	4,4	18	"	1080		"	"
92	80	5,2	15,29	"	1020		"	"
120	80	6,9	11,67	"	930		"	"
144	80	8,2	9,71	"	880		"	"

M = 95 .. 200 Nm

50 Hz			i	Type	F_{RN}	F_{RV}	permissible input speed [1/min]	
n_2	M_2	M_1					for mounting position	
(4 pole)	f_B=1,0						H1,H2,H3,H4,H5,B5,V1 B3,B6,B7,B8,V5	H6,V3,V6
1/min	Nm	Nm			N	N		
14	157	1,5	102,5	**BK10-..-SN**	7000		3600	1800
16	178	2	89,3	"	7000		"	"
19	200	2,8	72,31	"	7000		"	"
23	200	3,2	61,68	"	7000		"	"
29	200	4,1	48,96	"	6400		"	"
34	200	4,9	40,79	"	6000		"	"
41	200	5,8	34,25	"	5600		"	"
49	200	7	28,76	"	5200		"	"
62	200	8,8	22,65	"	4650		"	"
76	200	11	18,52	"	4300		"	"
83	136	8	16,92	"	3700		"	"
97	200	14	14,5	"	3900		"	"
117	115	10	11,93	"	3100		"	"
131	181	17	10,7	"	3500		"	"
149	115	12	9,4	"	2700		"	"
182	115	15	7,68	"	2400		"	"
233	105	17	6,02	"	2100		"	"
315	95	21	4,44	"	1900		"	"

M = 196 .. 330 Nm

50 Hz			i	Type	F_{RN}	F_{RV}	permissible input speed [1/min]	
n_2	M_2	M_1					for mounting position	
(4 pole)	f_B=1,0						H1,H2,H3,H4,H5,B5,V1 B3,B6,B7,B8,V5	H6,V3,V6
1/min	Nm	Nm			N	N		
13	315	2,9	108,6	**BK20**	8700	9000	3600	1800
16	330	3,7	88,12	"	8000	9000	"	"
18	330	4,3	76,79	"	7500	9000	"	"
23	330	5,4	61,3	"	6500	9000	"	"
27	330	6,4	51,22	"	6300	9000	"	"
33	330	7,7	42,7	"	5800	9000	"	"
38	330	9	36,69	"	5400	9000	"	"
49	330	12	28,66	"	4850	9000	"	"
58	330	14	24,29	"	4500	9000	"	"
72	330	17	19,39	"	4050	9000	"	"
80	230	13	17,42	"	3250	9000	"	"
95	330	22	14,75	"	3650	9000	"	"
120	230	20	11,69	"	2400	8800	"	"
126	300	27	11,14	"	3300	8150	"	"
141	230	23	9,91	"	1910	8300	"	"
177	230	29	7,91	"	1330	7600	"	"
233	215	36	6,02	"	580	6800	"	"
308	196	43	4,54	"	520	6150	"	"

M = 194 .. 450 Nm

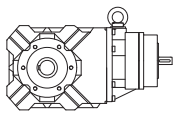

50 Hz			i	Type	F_{RN}	F_{RV}	permissible input speed [1/min]	
n_2	M_2	M_1					for mounting position	
(4 pole)	f_B=1,0						H1,H2,H3,H4,H5,B5,V1	H6,V3,V6
1/min	Nm	Nm			N	N	B3,B6,B7,B8,V5	
14	450	4,4	102,4	**BK30-..-SN**	11200	12000	3600	1800
16	450	5,1	88,38	"	10600	12000	"	"
20	450	6,3	71,56	"	9700	12000	"	"
24	450	7,6	59,27	"	8900	12000	"	"
28	450	9	50,27	"	8300	12000	"	"
33	450	10	42,89	"	7800	12000	"	"
42	450	13	33,7	"	7000	12000	"	"
49	450	16	28,76	"	6500	12000	"	"
60	450	19	23,2	"	5900	12000	"	"
67	320	15	20,85	"	5000	12000	"	"
78	450	25	17,95	"	5300	12000	"	"
97	450	31	14,5	"	4900	12000	"	"
100	320	23	13,98	"	4050	12000	"	"
117	320	27	11,93	"	3650	12000	"	"
123	415	36	11,39	"	4150	12000	"	"
145	320	33	9,63	"	3150	11500	"	"
188	265	36	7,45	"	2200	10400	"	"
233	210	35	6,02	"	1690	9600	"	"
296	194	41	4,73	"	1550	8800	"	"

8

M = 430 .. 780 Nm

50 Hz			i	Type	F_{RN}	F_{RV}	permissible input speed [1/min]	
n_2	M_2	M_1					for mounting position	
(4 pole)	f_B=1,0						H1,H2,H3,H4,H5,B5,V1	H6,V3,V6
1/min	Nm	Nm			N	N	B3,B6,B7,B8,V5	
13	780	7,5	104	**BK40-..-SN**	11700	17000	3600	1800
17	780	9,2	84,36	"	10700	17000	"	"
20	780	11	70,11	"	9800	17000	"	"
23	780	13	59,66	"	9100	17000	"	"
27	780	15	51,18	"	8400	17000	"	"
34	780	19	40,88	"	7600	17000	"	"
40	780	23	34,61	"	6900	17000	"	"
49	780	27	28,59	"	6300	17000	"	"
62	780	35	22,44	"	5500	16500	"	"
78	780	43	18,05	"	4900	15300	"	"
97	780	54	14,5	"	4500	14300	"	"
118	490	41	11,86	"	1770	12200	"	"
125	715	64	11,17	"	4100	13100	"	"
150	490	53	9,31	"	1040	11200	"	"
187	490	65	7,49	"	750	10500	"	"
233	470	78	6,02	"	470	9800	"	"
302	430	93	4,63	"	430	8950	"	"

M = 718 .. 1050 Nm

50 Hz			i	Type	F_{RN}	F_{RV}	permissible input speed [1/min]	
n_2	M_2	M_1					for mounting position	
(4 pole)	f_B=1,0						H1,H2,H3,H4,H5,B5,V1	H6,V3,V6
1/min	Nm	Nm			N	N	B3,B6,B7,B8,V5	
15	1050	11	95,29	**BK50-..-SN**	14100	26000	3600	1800
19	1050	14	75,4	"	12600	26000	"	"
23	1050	17	60,76	"	11400	26000	"	"
29	1050	22	47,5	"	10100	25700	"	"
40	1050	30	35,21	"	8700	23100	"	"
53	1050	40	26,51	"	7800	21200	"	"
72	1050	54	19,33	"	6900	19200	"	"
78	720	40	17,92	"	4600	16800	"	"

BK-series bevel geared motors

Selection - bevel gearbox with SN input

M = 718 .. 1050 Nm

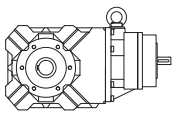

50 Hz			i	Type	F_{RN}	F_{RV}	permissible input speed [1/min]	
n_2	M_2	M_1					for mounting position	
(4 pole)	f_B=1,0						H1,H2,H3,H4,H5,B5,V1 B3,B6,B7,B8,V5	H6,V3,V6
1/min	Nm	Nm			N	N		
100	1050	75	13,95	**BK50-..-SN**	6100	17400	3600	1800
140	810	81	10	"	1220	13200	"	"
144	930	96	9,73	"	5400	15400	"	"
192	810	111	7,29	"	620	11900	"	"
266	810	154	5,26	"	130	10700	"	"
381	718	196	3,67	"	115	9450	"	"

M = 1464 .. 2300 Nm

50 Hz			i	Type	F_{RN}	F_{RV}	permissible input speed [1/min]	
n_2	M_2	M_1					for mounting position	
(4 pole)	f_B=1,0						H1,H2,H3,H4,H5,B5,V1 B3,B6,B7,B8,V5	H6,V3,V6
1/min	Nm	Nm			N	N		
10	2300	17	137	**BK60-..-SN**	16600	34000	3600	1800
11	2300	19	122,5	"	15500	34000	"	"
12	2300	20	113,2	"	15000	34000	"	"
14	2300	23	101,2	"	13900	34000	"	"
16	2300	26	87,41	"	12900	34000	"	"
18	2300	29	78,13	"	11900	34000	"	"
21	2300	35	65,95	"	10900	33000	"	"
24	2300	39	58,95	"	9900	31500	"	"
28	2300	46	50,4	"	9100	29800	"	"
31	2300	51	45,05	"	8200	28300	"	"
37	2300	61	37,8	"	7300	26500	"	"
41	2300	68	33,78	"	6500	25200	"	"
51	2300	84	27,36	"	5600	23200	"	"
57	2300	94	24,45	"	4850	22000	"	"
68	2250	110	20,54	"	4400	20600	"	"
76	2150	117	18,36	"	4000	19900	"	"
97	1920	133	14,41	"	3650	18600	"	"
101	1973	142	13,85	"	3850	18000	"	"
113	1885	152	12,38	"	3500	17400	"	"
129	1670	154	10,82	"	3200	17000	"	"
192	1464	201	7,29	"	2800	14900	"	"

M = 3050 .. 5200 Nm

50 Hz			i	Type	F_{RN}	F_{RV}	permissible input speed [1/min]	
n_2	M_2	M_1					for mounting position	
(4 pole)	f_B=1,0						H1,H2,H3,H4,H5,B5,V1 B3,B6,B7,B8,V5	H6,V3,V6
1/min	Nm	Nm			N	N		
8	5200	30	175,7	**BK70-..-SN**	24100	50000	1800	1800
9,1	5200	34	154,4	"	21900	50000	"	"
10	5200	38	136,7	"	20700	50000	"	"
12	5200	43	120,2	"	18600	50000	"	"
14	5200	50	103,5	"	17200	50000	"	"
15	5200	57	90,96	"	15300	49900	"	"
18	5200	65	79,89	"	14300	47600	"	"
20	5200	74	70,23	"	12500	44800	"	"
23	5200	84	61,6	"	11500	42800	"	"
26	5200	96	54,15	"	9900	40200	"	"
31	5100	112	45,59	"	9000	37900	"	"
35	4850	121	40,08	"	8300	36300	"	"
40	4700	134	35,15	"	8000	35000	"	"
45	4500	146	30,9	"	7500	33600	"	"
56	4250	171	24,89	"	7000	31500	"	"
64	4050	185	21,88	"	6500	30200	"	"
81	3500	203	17,24	"	6500	29200	"	"
92	3050	201	15,16	"	5600	25800	"	"

M = 4750 .. 10500 Nm

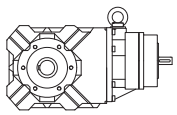

50 Hz			i	Type	F_{RN}	F_{RV}	permissible input speed [1/min]	
n_2	M_2	M_1					for mounting position	
(4 pole)	f_B=1,0						H1,H2,H3,H4,H5,B5,V1	H6,V3,V6
1/min	Nm	Nm			N	N	B3,B6,B7,B8,V5	
8,2	10500	61	171,5	**BK80-..-SN**	30000	75000	1800	1800
9,1	10500	69	153,1	"	27200	75000	"	"
11	10500	80	131,6	"	24900	75000	"	"
12	10500	89	117,5	"	22300	75000	"	"
14	10500	102	102,5	"	20500	75000	"	"
15	10300	113	91,53	"	18300	74200	"	"
18	10000	126	79,22	"	17600	71300	"	"
20	9600	136	70,72	"	16600	68700	"	"
23	9200	154	59,6	"	15700	65500	"	"
26	8800	165	53,21	"	14800	63100	"	"
30	8500	182	46,8	"	14300	60900	"	"
34	8200	196	41,78	"	13500	58700	"	"
41	7800	228	34,22	"	12600	55400	"	"
46	7400	242	30,56	"	11900	53400	"	"
56	7000	282	24,85	"	11200	50400	"	"
63	6700	302	22,19	"	10500	48500	"	"
79	5200	292	17,79	"	9400	42100	"	"
88	4750	299	15,88	"	8400	38600	"	"

M = 11500 .. 16800 Nm

50 Hz			i	Type	F_{RN}	F_{RV}	permissible input speed [1/min]	
n_2	M_2	M_1					for mounting position	
(4 pole)	f_B=1,0						H1,H2,H3,H4,H5,B5,V1	H6,V3,V6
1/min	Nm	Nm			N	N	B3,B6,B7,B8,V5	
8,4	16800	100	167,2	**BK90-..-SN**	49400	120000	1800	1800
9,4	16800	112	149,5	"	45600	120000	"	"
11	16800	128	130,9	"	42700	119400	"	"
12	16800	144	117	"	39200	113000	"	"
14	16800	165	102	"	36600	107000	"	"
15	16800	184	91,19	"	33300	101000	"	"
18	16800	217	77,51	"	30300	94400	"	"
20	16800	243	69,27	"	27200	88900	"	"
23	16800	273	61,52	"	25500	84600	"	"
25	16100	293	54,98	"	24000	81000	"	"
31	15400	336	45,8	"	22700	76300	"	"
34	14700	359	40,94	"	21400	73100	"	"
41	14100	414	34,09	"	20300	68800	"	"
46	13500	443	30,47	"	19100	65900	"	"
56	12800	513	24,94	"	18000	61700	"	"
63	12300	552	22,29	"	16900	59100	"	"
69	12000	594	20,21	"	16600	56700	"	"
77	11500	636	18,07	"	15600	54400	"	"

BK-series bevel geared motors

Selection - bevel geared box with C-coupling

M = 63 .. 80 Nm

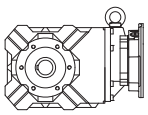

50 Hz		i	Type	F_{RN}	F_{RV}	max. permissible input torque M1 [Nm] *												
n_2	M_2					1	3	3	5	10	20	26	55	105	145	210	290	385	575
(4 pole)	f_B=1,0					IEC Motor Size *													
1/min	Nm			N	N	56	63	71	80	90	100	112	132	160	180	200	225	250	280
22	63,5	63,33	**BK06-..-C/IEC**	1700		■	■	■	■										
26	68	54,38	"	1600		■	■	■	■										
29	80	47,78	"	1500		■	■	■	■										
37	80	38,18	"	1380		■	■	■	■										
42	80	33,33	"	1320		■	■	■	■										
53	80	26,36	"	1230		■	■	■	■										
65	80	21,54	"	1150		■	■	■	■										
78	80	18	"	1080		■	■	■	■										
92	80	15,29	"	1020		■	■	■	■										
120	80	11,67	"	930		■	■	■	■										
144	80	9,71	"	880		■	■	■	■										
193	73	7,25	"	800					■										

M = 95 .. 220 Nm

50 Hz		i	Type	F_{RN}	F_{RV}	max. permissible input torque M1 [Nm] *												
n_2	M_2					1	3	3	5	10	20	26	55	105	145	210	290	385	575
(4 pole)	f_B=1,0					IEC Motor Size *													
1/min	Nm			N	N	56	63	71	80	90	100	112	132	160	180	200	225	250	280
14	157	102,5	**BK10-..-C/IEC**	7000		■	■	■											
16	178	89,3	"	7000		■	■	■	■	■	■								
19	200	72,31	"	7000		■	■	■	■	■	■								
23	200	61,68	"	7000		■	■	■	■	■	■								
29	200	48,96	"	6400		■	■	■	■	■	■								
34	200	40,79	"	6000		■	■	■	■	■	■								
41	200	34,25	"	5600		■	■	■	■	■	■								
49	200	28,76	"	5200		■	■	■	■	■	■								
62	200	22,65	"	4650		■	■	■	■	■	■								
76	200	18,52	"	4300		■	■	■	■	■	■								
83	136	16,92	"	3700		■	■	■	■	■	■								
97	200	14,5	"	3900					■	■	■								
117	115	11,93	"	3100		■	■	■	■	■	■								
131	181	10,7	"	3500					■	■	■								
149	115	9,4	"	2700		■	■	■	■	■	■								
182	115	7,68	"	2400		■	■	■	■	■	■								
233	105	6,02	"	2100					■	■	■								
315	95	4,44	"	1900					■	■	■								
3,3	148	428,8	**BK10Z-..-C/IEC**	7000		■	■	■	■										
3,7	165	373,4	"	7000		■	■	■	■										
4,6	184	302,4	"	7000		■	■	■	■										
5,4	200	257,9	"	7000		■	■	■	■										
6,8	200	204,7	"	7000		■	■	■	■										
8,2	200	170,6	"	7000		■	■	■	■										
10	163	143,2	"	7000		■	■	■	■										
12	137	120,3	"	7000		■	■	■	■										
0,34	220	4120	**BK10G06-..-C/IEC**	7000		■	■	■											
0,4	220	3537	"	7000		■	■	■											
0,45	220	3107	"	7000		■	■	■	■										
0,49	220	2849	"	7000		■	■	■	■										
0,6	220	2467	"	7000		■	■	■	■										
0,6	220	2261	"	7000		■	■	■	■										
0,7	220	1971	"	7000		■	■	■	■										
0,9	220	1577	"	7000		■	■	■	■										
1	220	1361	"	7000		■	■	■	■										
1,3	220	1112	"	7000		■	■	■	■										
1,5	220	929,3	"	7000		■	■	■	■										
1,8	220	789,7	"	7000		■	■	■	■										
2,2	220	635,5	"	7000		■	■	■	■										

8

* acc. to DIN/EN 50347:2001
For speeds above 1500 1/min, refer to manufacturer

M = 95 .. 220 Nm

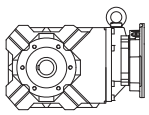

50 Hz		i	Type	F_{RN}	F_{RV}	max. permissible input torque M1 [Nm] *												
n_2	M_2					1	3	3	5	10	20	26	55	105	145	210	290	385	575
(4 pole)	f_B=1,0					IEC Motor Size *													
1/min	Nm			N	N	56	63	71	80	90	100	112	132	160	180	200	225	250	280
2,5	220	552,3	**BK10G06-..-C/IEC**	7000		■	■	■	■										
2,8	220	501,4	"	7000		■	■	■	■										
3	220	459,2	"	7000		■	■	■	■										
3,4	220	410,8	"	7000		■	■	■	■										
4,1	220	343,2	"	7000		■	■	■	■										

M = 196 .. 360 Nm

50 Hz		i	Type	F_{RN}	F_{RV}	max. permissible input torque M1 [Nm] *												
n_2	M_2					1	3	3	5	10	20	26	55	105	145	210	290	385	575
(4 pole)	f_B=1,0					IEC Motor Size *													
1/min	Nm			N	N	56	63	71	80	90	100	112	132	160	180	200	225	250	280
13	315	108,6	**BK20-..-C/IEC**	8700	9000	■	■	■	■	■	■								
16	330	88,12	"	8000	9000	■	■	■	■	■	■								
18	330	76,79	"	7500	9000	■	■	■	■	■	■								
23	330	61,3	"	6500	9000	■	■	■	■	■	■								
27	330	51,22	"	6300	9000	■	■	■	■	■	■								
33	330	42,7	"	5800	9000	■	■	■	■	■	■								
38	330	36,69	"	5400	9000	■	■	■	■	■	■								
49	330	28,66	"	4850	9000	■	■	■	■	■	■								
58	330	24,29	"	4500	9000	■	■	■	■	■	■								
72	330	19,39	"	4050	9000				■	■	■								
80	230	17,42	"	3250	9000	■	■	■	■	■	■								
95	330	14,75	"	3650	9000				■	■	■								
120	230	11,69	"	2400	8800	■	■	■	■	■	■								
126	300	11,14	"	3300	8150				■	■	■								
141	230	9,91	"	1910	8300	■	■	■	■	■	■								
177	230	7,91	"	1330	7600				■	■	■								
233	215	6,02	"	580	6800				■	■	■								
308	196	4,54	"	520	6150				■	■	■								
3,8	290	367,7	**BK20Z-..-C/IEC**	8700	9000	■	■	■	■										
4,7	310	298,2	"	8700	9000	■	■	■	■										
5,4	330	259,9	"	8700	9000	■	■	■	■										
6,7	330	207,5	"	8700	9000	■	■	■	■										
8,1	330	173,4	"	8700	9000	■	■	■	■										
10	330	144,5	"	8700	9000	■	■	■	■										
11	330	124,2	"	8700	9000	■	■	■	■										
14	230	96,99	"	8700	9000	■	■	■	■										
0,34	360	4094	**BK20G06-..-C/IEC**	8700	9000	■	■	■											
0,4	360	3515	"	8700	9000	■	■	■											
0,45	360	3088	"	8700	9000	■	■	■	■										
0,49	360	2831	"	8700	9000	■	■	■	■										
0,5	360	2580	"	8700	9000	■	■	■	■										
0,6	360	2366	"	8700	9000	■	■	■	■										
0,7	360	2062	"	8700	9000	■	■	■	■										
0,8	360	1650	"	8700	9000	■	■	■	■										
1	360	1424	"	8700	9000	■	■	■	■										
1,1	360	1305	"	8700	9000	■	■	■	■										
1,3	360	1066	"	8700	9000	■	■	■	■										
1,6	360	891,2	"	8700	9000	■	■	■	■										
1,8	360	757	"	8700	9000	■	■	■	■										
2,2	360	630	"	8700	9000	■	■	■	■										
2,7	360	524,5	"	8700	9000	■	■	■	■										
2,9	360	480,4	"	8700	9000	■	■	■	■										
3,3	360	429,7	"	8700	9000	■	■	■	■										
3,9	360	359,1	"	8700	9000	■	■	■	■										

8

* acc. to DIN/EN 50347:2001
For speeds above 1500 1/min, refer to manufacturer

BK-series bevel geared motors

Selection - bevel geared box with C-coupling

M = 194 .. 490 Nm

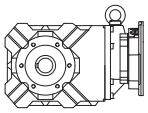

50 Hz		i	Type	F_{RN}	F_{RV}	max. permissible input torque M1 [Nm] *												
n_2	M_2					1	3	3	5	10	20	26	55	105	145	210	290	385	575
(4 pole)	f_B=1,0					IEC Motor Size *													
1/min	Nm			N	N	56	63	71	80	90	100	112	132	160	180	200	225	250	280
14	450	102,4	**BK30-..-C/IEC**	11200	12000	■	■	■	■	■	■								
16	450	88,38	"	10600	12000	■	■	■	■	■	■								
20	450	71,56	"	9700	12000	■	■	■	■	■	■								
24	450	59,27	"	8900	12000	■	■	■	■	■	■								
28	450	50,27	"	8300	12000	■	■	■	■	■	■								
33	450	42,89	"	7800	12000	■	■	■	■	■	■								
42	450	33,7	"	7000	12000	■	■	■	■	■	■	■							
49	450	28,76	"	6500	12000	■	■	■	■	■	■	■							
60	450	23,2	"	5900	12000				■	■	■	■							
67	320	20,85	"	5000	12000	■	■	■	■	■	■								
78	450	17,95	"	5300	12000				■	■	■	■							
97	450	14,5	"	4900	12000				■	■	■	■							
100	320	13,98	"	4050	12000	■	■	■	■	■	■	■							
117	320	11,93	"	3650	12000	■	■	■	■	■	■	■							
123	415	11,39	"	4150	12000				■	■	■	■							
145	320	9,63	"	3150	11500				■	■	■	■							
188	265	7,45	"	2200	10400				■	■	■	■							
233	210	6,02	"	1690	9600				■	■	■	■							
296	194	4,73	"	1550	8800				■	■	■	■							
3,2	380	441,3	**BK30Z-..-C/IEC**	11200	12000	■	■	■	■	■	■								
3,7	400	380,7	"	11200	12000	■	■	■	■	■	■								
4,5	385	308,3	"	11200	12000	■	■	■	■	■	■								
5,5	450	255,3	"	11200	12000	■	■	■	■	■	■								
6,5	450	216,5	"	11200	12000	■	■	■	■	■	■								
7,6	450	184,8	"	11200	12000	■	■	■	■	■	■								
10	450	145,1	"	11200	12000	■	■	■	■	■	■								
11	450	123,9	"	11200	12000	■	■	■	■	■	■								
0,35	490	3959	**BK30G06-..-C/IEC**	11200	12000	■	■	■											
0,41	490	3399	"	11200	12000	■	■	■											
0,47	490	2986	"	11200	12000	■	■	■	■										
0,5	490	2738	"	11200	12000	■	■	■	■										
0,6	490	2533	"	11200	12000	■	■	■	■										
0,7	490	2024	"	11200	12000	■	■	■	■										
0,8	490	1767	"	11200	12000	■	■	■	■										
0,9	490	1620	"	11200	12000	■	■	■	■										
1,1	490	1281	"	11200	12000	■	■	■	■										
1,2	490	1142	"	11200	12000	■	■	■	■										
1,5	490	954,1	"	11200	12000	■	■	■	■										
1,7	490	810,9	"	11200	12000	■	■	■	■										
1,9	490	743	"	11200	12000	■	■	■	■										
2,1	490	652,5	"	11200	12000	■	■	■	■										
2,5	490	567	"	11200	12000	■	■	■	■										
3	490	471,5	"	11200	12000	■	■	■	■										

M = 470 .. 850 Nm

50 Hz		i	Type	F_{RN}	F_{RV}	max. permissible input torque M1 [Nm] *												
n_2	M_2					1	3	3	5	10	20	26	55	105	145	210	290	385	575
(4 pole)	f_B=1,0					IEC Motor Size *													
1/min	Nm			N	N	56	63	71	80	90	100	112	132	160	180	200	225	250	280
13	780	104	**BK40-..-C/IEC**	11700	17000				■	■	■								
17	780	84,36	"	10700	17000				■	■	■								
20	780	70,11	"	9800	17000				■	■	■								
23	780	59,66	"	9100	17000				■	■	■								
27	780	51,18	"	8400	17000				■	■	■								
34	780	40,88	"	7600	17000				■	■	■	■							
40	780	34,61	"	6900	17000				■	■	■	■							
49	780	28,59	"	6300	17000				■	■	■	■							
62	780	22,44	"	5500	16500				■	■	■	■							
78	780	18,05	"	4900	15300				■	■	■	■							
97	780	14,5	"	4500	14300				■	■	■	■							
118	490	11,86	"	1770	12200				■	■	■	■							
125	715	11,17	"	4100	13100				■	■	■	■							

* acc. to DIN/EN 50347:2001
For speeds above 1500 1/min, refer to manufacturer

M = 470 .. 850 Nm

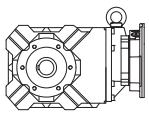

50 Hz		i	Type	F_{RN}	F_{RV}	max. permissible input torque M1 [Nm] *												
n_2	M_2					1	3	3	5	10	20	26	55	105	145	210	290	385	575
(4 pole)	f_B=1,0					IEC Motor Size *													
1/min	Nm			N	N	56	63	71	80	90	100	112	132	160	180	200	225	250	280
150	490	9,31	**BK40-..-C/IEC**	1040	11200				■	■	■	■							
187	490	7,49	"	750	10500				■	■	■	■							
233	470	6,02	"	470	9800				■	■	■	■							
302	430	4,63	"	430	8950				■	■	■	■							
3,3	570	430	**BK40Z-..-C/IEC**	11700	17000	■	■	■	■	■	■								
4	580	348,7	"	11700	17000	■	■	■	■	■	■								
4,8	680	289,8	"	11700	17000	■	■	■	■	■	■								
5,7	780	246,6	"	11700	17000	■	■	■	■	■	■								
6,6	780	211,5	"	11700	17000	■	■	■	■	■	■								
8,3	780	169	"	11700	17000	■	■	■	■	■	■								
10	780	143	"	11700	17000	■	■	■	■	■	■								
12	780	118,2	"	11700	17000	■	■	■	■	■	■								
0,32	850	4363	**BK40G10-..-C/IEC**	11700	17000	■	■	■											
0,37	850	3800	"	11700	17000	■	■	■	■	■	■								
0,41	850	3429	"	11700	17000	■	■	■	■	■	■								
0,45	850	3077	"	11700	17000	■	■	■	■	■	■								
0,5	850	2604	"	11700	17000	■	■	■	■	■	■								
0,6	850	2350	"	11700	17000	■	■	■	■	■	■								
0,7	850	2108	"	11700	17000	■	■	■	■	■	■								
0,8	850	1798	"	11700	17000	■	■	■	■	■	■								
1	850	1428	"	11700	17000	■	■	■	■	■	■								
1,2	850	1189	"	11700	17000	■	■	■	■	■	■								
1,4	850	998,3	"	11700	17000	■	■	■	■	■	■								
1,7	850	838,4	"	11700	17000	■	■	■	■	■	■								
1,9	850	756,7	"	11700	17000	■	■	■	■	■	■								
2,1	850	660,2	"	11700	17000	■	■	■	■	■	■								
2,6	850	540	"	11700	17000	■	■	■	■	■	■								
2,9	850	487,3	"	11700	17000	■	■	■	■	■	■								

M = 718 .. 1150 Nm

50 Hz		i	Type	F_{RN}	F_{RV}	max. permissible input torque M1 [Nm] *												
n_2	M_2					1	3	3	5	10	20	26	55	105	145	210	290	385	575
(4 pole)	f_B=1,0					IEC Motor Size *													
1/min	Nm			N	N	56	63	71	80	90	100	112	132	160	180	200	225	250	280
15	1050	95,29	**BK50-..-C/IEC**	14100	26000				■	■	■								
19	1050	75,4	"	12600	26000				■	■	■	■	■	■					
23	1050	60,76	"	11400	26000				■	■	■	■	■	■					
29	1050	47,5	"	10100	25700				■	■	■	■	■	■					
40	1050	35,21	"	8700	23100				■	■	■	■	■	■					
53	1050	26,51	"	7800	21200				■	■	■	■	■	■					
72	1050	19,33	"	6900	19200				■	■	■	■	■	■					
78	720	17,92	"	4600	16800				■	■	■	■	■	■					
100	1050	13,95	"	6100	17400							■	■	■					
140	810	10	"	1220	13200				■	■	■	■	■	■					
144	930	9,73	"	5400	15400							■	■	■					
192	810	7,29	"	620	11900				■	■	■	■	■	■					
266	810	5,26	"	130	10700							■	■	■					
381	718	3,67	"	115	9450							■	■	■					
3,4	840	414,8	**BK50Z-..-C/IEC**	14100	26000	■	■	■	■	■	■								
4,3	1010	328,2	"	14100	26000	■	■	■	■	■	■								
5,3	1050	264,5	"	14100	26000	■	■	■	■	■	■								
6,8	1050	206,8	"	14100	26000	■	■	■	■	■	■								
9,1	1050	153,3	"	14100	26000	■	■	■	■	■	■								
12	1050	115,4	"	14100	26000	■	■	■	■	■	■								
0,32	1150	4443	**BK50G10-..-C/IEC**	14100	26000	■	■	■											
0,36	1150	3870	"	14100	26000	■	■	■	■	■	■								
0,4	1150	3492	"	14100	26000	■	■	■	■	■	■								
0,46	1150	3025	"	14100	26000	■	■	■	■	■	■								
0,5	1150	2730	"	14100	26000	■	■	■	■	■	■								
0,6	1150	2450	"	14100	26000	■	■	■	■	■	■								
0,7	1150	2024	"	14100	26000	■	■	■	■	■	■								
0,8	1150	1816	"	14100	26000	■	■	■	■	■	■								

* acc. to DIN/EN 50347:2001
For speeds above 1500 1/min, refer to manufacturer

BK-series bevel geared motors

Selection - bevel geared box with C-coupling

M = 718 .. 1150 Nm

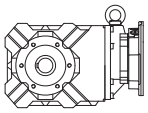

50 Hz		i	Type	F_{RN}	F_{RV}	max. permissible input torque M1 [Nm] *													
n_2	M_2					1	3	3	5	10	20	26	55	105	145	210	290	385	575
(4 pole)	f_B=1,0					IEC Motor Size *													
1/min	Nm			N	N	56	63	71	80	90	100	112	132	160	180	200	225	250	280
0,9	1150	1549	**BK50G10-..-C/IEC**	14100	26000	■	■	■	■	■	■								
1	1150	1398	"	14100	26000	■	■	■	■	■	■								
1,1	1150	1230	"	14100	26000	■	■	■	■	■	■								
1,4	1150	1024	"	14100	26000	■	■	■	■	■	■								
1,6	1150	859,8	"	14100	26000	■	■	■	■	■	■								
1,9	1150	722,2	"	14100	26000	■	■	■	■	■	■								
2,1	1150	651,7	"	14100	26000	■	■	■	■	■	■								
2,5	1150	568,6	"	14100	26000	■	■	■	■	■	■								
2,7	1150	513,4	"	14100	26000	■	■	■	■	■	■								
3	1150	465,1	"	14100	26000	■	■	■	■	■	■								

M = 1464 .. 2500 Nm

50 Hz		i	Type	F_{RN}	F_{RV}	max. permissible input torque M1 [Nm] *													
n_2	M_2					1	3	3	5	10	20	26	55	105	145	210	290	385	575
(4 pole)	f_B=1,0					IEC Motor Size *													
1/min	Nm			N	N	56	63	71	80	90	100	112	132	160	180	200	225	250	280
10	2300	137	**BK60-..-C/IEC**	16600	34000					■	■	■	■	■					
11	2300	122,5	"	15500	34000					■	■	■	■	■					
12	2300	113,2	"	15000	34000					■	■	■	■	■					
14	2300	101,2	"	13900	34000					■	■	■	■	■					
16	2300	87,41	"	12900	34000					■	■	■	■	■					
18	2300	78,13	"	11900	34000					■	■	■	■	■					
21	2300	65,95	"	10900	33000					■	■	■	■	■					
24	2300	58,95	"	9900	31500					■	■	■	■	■					
28	2300	50,4	"	9100	29800					■	■	■	■	■					
31	2300	45,05	"	8200	28300					■	■	■	■	■					
37	2300	37,8	"	7300	26500					■	■	■	■	■					
41	2300	33,78	"	6500	25200					■	■	■	■	■					
51	2300	27,36	"	5600	23200							■	■	■					
57	2300	24,45	"	4850	22000							■	■	■					
68	2250	20,54	"	4400	20600							■	■	■					
76	2150	18,36	"	4000	19900							■	■	■					
97	1920	14,41	"	3650	18600							■	■	■					
101	1973	13,85	"	3850	18000							■	■	■					
113	1885	12,38	"	3500	17400							■	■	■					
129	1670	10,82	"	3200	17000							■	■	■					
192	1464	7,29	"	2800	14900							■	■	■					
2,5	2300	557,2	**BK60Z-..-C/IEC**	16600	34000				■	■	■	■							
2,8	2300	498	"	16600	34000				■	■	■	■							
3	2300	460,4	"	16600	34000				■	■	■	■							
3,4	2300	411,5	"	16600	34000				■	■	■	■							
3,9	2300	355,5	"	16600	34000				■	■	■	■							
4,4	2300	317,7	"	16600	34000				■	■	■	■							
5,2	2300	268,2	"	16600	34000				■	■	■	■							
5,8	2300	239,7	"	16600	34000				■	■	■	■							
6,8	2300	205	"	16600	34000				■	■	■	■							
7,6	2300	183,2	"	16600	34000				■	■	■	■							
9,1	2300	153,7	"	16600	34000				■	■	■	■							
0,16	2500	8990	**BK60G20-..-C/IEC**	16600	34000	■	■	■	■	■	■								
0,17	2500	8093	"	16600	34000	■	■	■	■	■	■								
0,19	2500	7291	"	16600	34000	■	■	■	■	■	■								
0,21	2500	6565	"	16600	34000	■	■	■	■	■	■								
0,24	2500	5721	"	16600	34000	■	■	■	■	■	■								
0,28	2500	5072	"	16600	34000	■	■	■	■	■	■								
0,33	2500	4239	"	16600	34000	■	■	■	■	■	■								
0,4	2500	3533	"	16600	34000	■	■	■	■	■	■								
0,46	2500	3036	"	16600	34000	■	■	■	■	■	■								
0,5	2500	2733	"	16600	34000	■	■	■	■	■	■								
0,6	2500	2371	"	16600	34000	■	■	■	■	■	■								
0,7	2500	2010	"	16600	34000	■	■	■	■	■	■								
0,8	2500	1810	"	16600	34000	■	■	■	■	■	■								

* acc. to DIN/EN 50347:2001
For speeds above 1500 1/min, refer to manufacturer

M = 1464 .. 2500 Nm

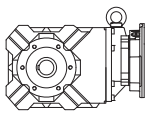

50 Hz		i	Type	F_{RN}	F_{RV}	max. permissible input torque M1 [Nm] *												
n_2	M_2					1	3	3	5	10	20	26	55	105	145	210	290	385	575
(4 pole)	f_B=1,0					IEC Motor Size *													
1/min	Nm			N	N	56	63	71	80	90	100	112	132	160	180	200	225	250	280
0,9	2500	1618	**BK60G20-..-C/IEC**	16600	34000	■	■	■	■	■	■								
1,1	2500	1322	"	16600	34000	■	■	■	■	■	■								
1,4	2500	1016	"	16600	34000	■	■	■	■	■	■								
1,6	2500	887,8	"	16600	34000	■	■	■	■	■	■								
1,9	2500	752,1	"	16600	34000	■	■	■	■	■	■								
2,3	2500	621,5	"	16600	34000	■	■	■	■	■	■								

M = 3050 .. 5700 Nm

50 Hz		i	Type	F_{RN}	F_{RV}	max. permissible input torque M1 [Nm] *												
n_2	M_2					1	3	3	5	10	20	26	55	105	145	210	290	385	575
(4 pole)	f_B=1,0					IEC Motor Size *													
1/min	Nm			N	N	56	63	71	80	90	100	112	132	160	180	200	225	250	280
8	5200	175,7	**BK70-..-C/IEC**	24100	50000					■	■	■	■	■					
9,1	5200	154,4	"	21900	50000					■	■	■	■	■					
10	5200	136,7	"	20700	50000					■	■	■	■	■					
12	5200	120,2	"	18600	50000					■	■	■	■	■					
14	5200	103,5	"	17200	50000					■	■	■	■	■	■	■	■	■	■
15	5200	90,96	"	15300	49900					■	■	■	■	■	■	■	■	■	■
18	5200	79,89	"	14300	47600					■	■	■	■	■	■	■	■	■	■
20	5200	70,23	"	12500	44800					■	■	■	■	■	■	■	■	■	■
23	5200	61,6	"	11500	42800					■	■	■	■	■	■	■	■	■	■
26	5200	54,15	"	9900	40200					■	■	■	■	■	■	■	■	■	■
31	5100	45,59	"	9000	37900							■	■	■	■	■	■	■	■
35	4850	40,08	"	8300	36300							■	■	■	■	■	■	■	■
40	4700	35,15	"	8000	35000							■	■	■	■	■	■	■	■
45	4500	30,9	"	7500	33600							■	■	■	■	■	■	■	■
56	4250	24,89	"	7000	31500							■	■	■	■	■	■	■	■
64	4050	21,88	"	6500	30200							■	■	■	■	■	■	■	■
81	3500	17,24	"	6500	29200										■	■	■	■	■
92	3050	15,16	"	5600	25800										■	■	■	■	■
1,9	5200	733,6	**BK70Z-..-C/IEC**	24100	50000				■	■	■	■	■						
2,2	5200	644,9	"	24100	50000				■	■	■	■	■						
2,5	5200	570,8	"	24100	50000				■	■	■	■	■						
2,8	5200	501,8	"	24100	50000				■	■	■	■	■						
3,2	5200	432,1	"	24100	50000				■	■	■	■	■						
3,7	5200	379,9	"	24100	50000				■	■	■	■	■						
4,2	5200	333,6	"	24100	50000				■	■	■	■	■						
4,8	5200	293,3	"	24100	50000				■	■	■	■	■						
5,4	5200	257,3	"	24100	50000				■	■	■	■	■						
6,2	5200	226,2	"	24100	50000				■	■	■	■	■						
7,4	5200	190,4	"	24100	50000				■	■	■	■	■						
0,12	5700	11529	**BK70G20-..-C/IEC**	24100	50000	■	■	■	■	■	■								
0,15	5700	9351	"	24100	50000	■	■	■	■	■	■								
0,17	5700	8149	"	24100	50000	■	■	■	■	■	■								
0,22	5700	6504	"	24100	50000	■	■	■	■	■	■								
0,26	5700	5436	"	24100	50000	■	■	■	■	■	■								
0,31	5700	4531	"	24100	50000	■	■	■	■	■	■								
0,36	5700	3894	"	24100	50000	■	■	■	■	■	■								
0,4	5700	3505	"	24100	50000	■	■	■	■	■	■								
0,46	5700	3041	"	24100	50000	■	■	■	■	■	■								
0,5	5700	2578	"	24100	50000	■	■	■	■	■	■								
0,7	5700	2040	"	24100	50000	■	■	■	■	■	■								
0,8	5700	1696	"	24100	50000	■	■	■	■	■	■								
1	5700	1457	"	24100	50000	■	■	■	■	■	■								
1,1	5700	1280	"	24100	50000	■	■	■	■	■	■								
1,2	5700	1139	"	24100	50000	■	■	■	■	■	■								
1,5	5700	964,6	"	24100	50000	■	■	■	■	■	■								
1,7	5700	847,7	"	24100	50000	■	■	■	■	■	■								

* acc. to DIN/EN 50347:2001
For speeds above 1500 1/min, refer to manufacturer

BK-series bevel geared motors

Selection - bevel geared box with C-coupling

M = 4750 .. 11500 Nm

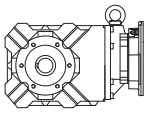

50 Hz		i	Type	F_{RN}	F_{RV}	max. permissible input torque M1 [Nm] *													
n_2	M_2					1	3	3	5	10	20	26	55	105	145	210	290	385	575
(4 pole)	f_B=1,0					IEC Motor Size *													
1/min	Nm			N	N	56	63	71	80	90	100	112	132	160	180	200	225	250	280
8,2	10500	171,5	**BK80-..-C/IEC**	30000	75000							■	■	■					
9,1	10500	153,1	"	27200	75000							■	■	■					
11	10500	131,6	"	24900	75000							■	■	■	■	■	■	■	■
12	10500	117,5	"	22300	75000							■	■	■	■	■	■	■	■
14	10500	102,5	"	20500	75000							■	■	■	■	■	■	■	■
15	10300	91,53	"	18300	74200							■	■	■	■	■	■	■	■
18	10000	79,22	"	17600	71300							■	■	■	■	■	■	■	■
20	9600	70,72	"	16600	68700							■	■	■	■	■	■	■	■
23	9200	59,6	"	15700	65500							■	■	■	■	■	■	■	■
26	8800	53,21	"	14800	63100							■	■	■	■	■	■	■	■
30	8500	46,8	"	14300	60900							■	■	■	■	■	■	■	■
34	8200	41,78	"	13500	58700							■	■	■	■	■	■	■	■
41	7800	34,22	"	12600	55400							■	■	■	■	■	■	■	■
46	7400	30,56	"	11900	53400							■	■	■	■	■	■	■	■
56	7000	24,85	"	11200	50400										■	■	■	■	■
63	6700	22,19	"	10500	48500										■	■	■	■	■
79	5200	17,79	"	9400	42100										■	■	■	■	■
88	4750	15,88	"	8400	38600										■	■	■	■	■
2,5	11500	559,5	**BK80Z-..-C/IEC**	30000	75000					■	■	■	■	■					
2,8	11500	499,5	"	30000	75000					■	■	■	■	■					
3,2	11500	435,7	"	30000	75000					■	■	■	■	■					
3,6	11500	389	"	30000	75000					■	■	■	■	■					
4,2	11500	336,7	"	30000	75000					■	■	■	■	■					
4,7	11500	300,6	"	30000	75000					■	■	■	■	■					
5,5	11500	253,3	"	30000	75000					■	■	■	■	■					
6,2	11500	226,1	"	30000	75000					■	■	■	■	■					
7	11500	198,9	"	30000	75000					■	■	■	■	■					
7,9	11500	177,6	"	30000	75000					■	■	■	■	■					
0,12	11500	11353	**BK80G40-..-C/IEC**	30000	75000				■	■	■								
0,14	11500	10228	"	30000	75000				■	■	■								
0,17	11500	8294	"	30000	75000				■	■	■								
0,18	11500	7652	"	30000	75000				■	■	■								
0,2	11500	6893	"	30000	75000				■	■	■								
0,24	11500	5865	"	30000	75000				■	■	■								
0,28	11500	5032	"	30000	75000				■	■	■								
0,31	11500	4461	"	30000	75000				■	■	■	■							
0,37	11500	3776	"	30000	75000				■	■	■	■							
0,45	11500	3120	"	30000	75000				■	■	■	■							
0,5	11500	2811	"	30000	75000				■	■	■	■							
0,6	11500	2449	"	30000	75000				■	■	■	■							
0,6	11500	2205	"	30000	75000				■	■	■	■							
0,8	11500	1775	"	30000	75000				■	■	■	■							
0,9	11500	1583	"	30000	75000				■	■	■	■							
1	11500	1425	"	30000	75000				■	■	■	■							
1,1	11500	1307	"	30000	75000				■	■	■	■							
1,3	11500	1079	"	30000	75000				■	■	■	■							
1,5	11500	963	"	30000	75000				■	■	■	■							
1,7	11500	847,2	"	30000	75000				■	■	■	■							
1,9	11500	756,3	"	30000	75000				■	■	■	■							
2,1	11500	680,9	"	30000	75000				■	■	■	■							
2,3	11500	607,8	"	30000	75000				■	■	■	■							

8

* acc. to DIN/EN 50347:2001
For speeds above 1500 1/min, refer to manufacturer

M = 11500 .. 18500 Nm

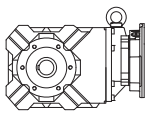

50 Hz		i	Type	F_{RN}	F_{RV}	max. permissible input torque M1 [Nm] *												
n_2	M_2					1	3	3	5	10	20	26	55	105	145	210	290	385	575
(4 pole)	f_B=1,0					IEC Motor Size *													
1/min	Nm			N	N	56	63	71	80	90	100	112	132	160	180	200	225	250	280
8,4	16800	167,2	**BK90-..-C/IEC**	49400	120000								■	■	■	■	■	■	■
9,4	16800	149,5	"	45600	120000								■	■	■	■	■	■	■
11	16800	130,9	"	42700	119400								■	■	■	■	■	■	■
12	16800	117	"	39200	113000								■	■	■	■	■	■	■
14	16800	102	"	36600	107000								■	■	■	■	■	■	■
15	16800	91,19	"	33300	101000								■	■	■	■	■	■	■
18	16800	77,51	"	30300	94400								■	■	■	■	■	■	■
20	16800	69,27	"	27200	88900								■	■	■	■	■	■	■
23	16800	61,52	"	25500	84600								■	■	■	■	■	■	■
25	16100	54,98	"	24000	81000								■	■	■	■	■	■	■
31	15400	45,8	"	22700	76300								■	■	■	■	■	■	■
34	14700	40,94	"	21400	73100								■	■	■	■	■	■	■
41	14100	34,09	"	20300	68800										■	■	■	■	■
46	13500	30,47	"	19100	65900										■	■	■	■	■
56	12800	24,94	"	18000	61700										■	■	■	■	■
63	12300	22,29	"	16900	59100										■	■	■	■	■
69	12000	20,21	"	16600	56700										■	■	■	■	■
77	11500	18,07	"	15600	54400										■	■	■	■	■
2	18500	713,5	**BK90Z-..-C/IEC**	49400	120000					■	■	■	■	■	■	■	■	■	■
2,2	18500	637,7	"	49400	120000					■	■	■	■	■	■	■	■	■	■
2,5	18500	558,5	"	49400	120000					■	■	■	■	■	■	■	■	■	■
2,8	18500	499,2	"	49400	120000					■	■	■	■	■	■	■	■	■	■
3,2	18500	435,3	"	49400	120000					■	■	■	■	■	■	■	■	■	■
3,6	18500	389,1	"	49400	120000					■	■	■	■	■	■	■	■	■	■
4,2	18500	330,7	"	49400	120000					■	■	■	■	■	■	■	■	■	■
4,7	18500	295,6	"	49400	120000					■	■	■	■	■	■	■	■	■	■
5,3	18500	262,5	"	49400	120000					■	■	■	■	■	■	■	■	■	■
6	18500	234,6	"	49400	120000					■	■	■	■	■	■	■	■	■	■
7,2	18500	195,4	"	49400	120000					■	■	■	■	■	■	■	■	■	■
8	18500	174,7	"	49400	120000					■	■	■	■	■	■				
0,13	18500	11012	**BK90G50-..-C/IEC**	49400	120000				■	■	■								
0,14	18500	9935	"	49400	120000				■	■	■								
0,18	18500	7862	"	49400	120000				■	■	■	■	■	■					
0,2	18500	7022	"	49400	120000				■	■	■	■	■	■					
0,22	18500	6335	"	49400	120000				■	■	■	■	■	■					
0,25	18500	5491	"	49400	120000				■	■	■	■	■	■					
0,28	18500	4952	"	49400	120000				■	■	■	■	■	■					
0,34	18500	4070	"	49400	120000				■	■	■	■	■	■					
0,38	18500	3672	"	49400	120000				■	■	■	■	■	■					
0,46	18500	3065	"	49400	120000				■	■	■	■	■	■					
0,5	18500	2764	"	49400	120000				■	■	■	■	■	■					
0,7	18500	2016	"	49400	120000				■	■	■	■	■	■					
0,8	18500	1803	"	49400	120000				■	■	■	■	■	■					
0,9	18500	1579	"	49400	120000				■	■	■	■	■	■					
1	18500	1363	"	49400	120000				■	■	■	■	■	■					
1,2	18500	1127	"	49400	120000				■	■	■	■	■	■					
1,4	18500	1008	"	49400	120000				■	■	■	■	■	■					
1,6	18500	882,3	"	49400	120000				■	■	■	■	■	■					
1,7	18500	821	"	49400	120000				■	■	■	■	■	■					

* acc. to DIN/EN 50347:2001
For speeds above 1500 1/min, refer to manufacturer

9

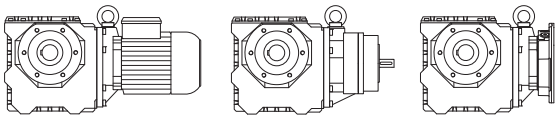

Page

BS-series worm-geared motors **355-398**
Selection

Description of worm-geared units
- Sizes
- Bauer service factors (f_B) for worm-geared motors
- Continuous operation without switching frequency Z ≤1/h
- Switching duty
- Bauer service factor
- Explanation of shock classification
- Key to abbreviations
- Selection tables, worm-geared motors

Selection - worm geared motors IE1
Selection - worm geared motors IE2
Selection - worm gearbox with SN input
Selection - worm gearbox with C-coupling

BS-series worm-geared motors

Description of worm-gear units

Sizes

Bauer BS-series worm-geared motors are normally supplied in eight frame sizes and with torques of 25 to 1,000 Nm. Higher torques are available on request. The gear unit is accommodated in a sturdy cast housing.

Efficiency

The efficiency of worm-geared motors depends on numerous factors, including lubrication, extent of wear, temperature and vibration. Calculated efficiency, therefore, is merely a guideline value. Please consult BAUER and state the boundary conditions if efficiency or self-locking capability are important factors for your application.

Bauer service factors (f_B) for worm-geared motors

Worm gears transmit torque by sliding friction only, which means that losses and temperature are inevitably higher than with helical-gear arrangements.
Of the numerous factors influencing the total loading of a worm-gear unit, the most important include:

- Mean torque (rated torque)
- Daily operating hours
- Severity of torque peaks (shock classification)
- Frequency of torque peaks (switching duty)
- Ambient temperature

These factors can be represented in a simplified and practical manner by **service factors**. The tables and explanations below attempt to provide an objective description of the **shock classification**, rather than a classification of the driven machinery. Experience has shown that, in addition to the torque shocks caused by the driven machinery (M_x/M_N), above all the power transmission components (clutches, chains etc.) plus the mass ratios play a decisive role in this.

See Bauer special imprint SD32 for more information.

9

Continuous operation without switching frequency Z ≤1/h

Factor f_1 for shock classification and operating time

Shock classification	Operating hours per day t_d ≤10 min	≤1 h	>1 h	>4 h	>8 h	>16 h
			≤4 h	≤8 h	≤16 h	≤24 h
I	0,7	0,8	0,9	1,0	1,25	1,4
II	0,9	1,0	1,12	1,25	1,6	1,8
III	1,25	1,4	1,6	1,8	2,2	2,5

Switching duty

Factor f_2 or shock classification and switching frequency

Switching frequency in single- shift operation t_d ≤8 h/d

Shock classification	1 <Z ≤100	100 <Z ≤1000	1000 <Z
I	1,25	1,4	1,6
II	1,6	1,8	2,0
III	1,8	2,0	2,2

Switching frequency in multiple- shift operation t_d >8 h/d

Shock classification	1 <Z ≤100	100 <Z ≤1000	1000 <Z
I	1,4	1,6	1,8
II	1,8	2,0	2,2
III	2,0	2,2	2,5

Ambient temperature

Factor f_3 for increased ambient temperature

AT	-10°C .. +25°C	>25°C	>30°C	>35°C	>40°C	>45°C	>50°C	>55°C
	no Factor	1,1	1,2	1,3	1,4	1,5	1,6	Enquiry

Bauer service factor

Bauer service factor f_B = maximum value f_1, f_2, f_3 (at daily operating hours > 1h)

For example: Shock classification II for Z = 100 switching operations per hour and multiple-shift operation yields a service factor $f_B = f_2 = 1,8$

Explanation of shock classification

Shock classification I:
Uniform without shock loads. All the following requirements must be satisfied:
- FI ≤1,3
- M_x/M_N ≤1,0
- Shock-absorbing power transmission components (e.g. highly resilient, zero-play coupling, φ N ≥5°)

Shock classification II:
Moderate shock loads. At least one of the following conditions applies:
- 1,3 <FI ≤2
- 1 ≤M_x/M_N ≤1,4
- Shock-neutral power transmission components (e.g. gear wheels, zero- playrigid coupling or resilient coupling with φ N <5 °)

Shock classification III:
Heavy shock loads. At least one of the following conditions applies:
- FI >2
- 1,4 <M_x/M_N ≤2,0
- Shock-amplifying power transmission components (e.g. coupling with play or chain drive)

Key to abbreviations

Z	Switching duty number of switching operations per hour
t_d	Daily operating time in hours (h/d)
FI	Factor of inertia FI = $(J_{ext} + J_{rot})/J_{rot}$
J_{ext}	Mass moment of inertia of the machine to be driven, in relation to the motor's rotor shaft (kgm^2)
J_{rot}	Mass moment of inertia of the motor rotor (kgm^2)
M_x	Highest impact torque above the static torque which can occur during normal operation or in emergency situations
M_N	Required static load torque for the application
M_x/M_N	Relative torque - Factor
φ_N	Torsional offset of the resilient coupling under rated torque
UT	Ambient temperature (°C)

Selection tables, worm-geared motors

Key to abbreviations

P	Rated output
n_2	Rated speed of the output shaft
i	Gear reduction ratio
M_2	Rated torque at the output shaft
f_B	Bauer Service factor
F_{RN}	Maximum permissible radial force with standard solid shaft (Code -.1 und -.2)

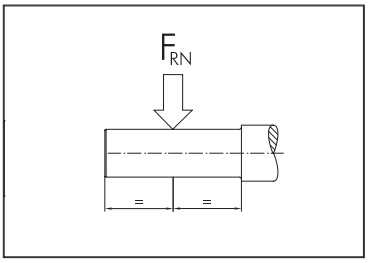

Use the selection tables to determine the size of geared motor required. The codes clearly define the Type of gear unit and output shaft (see chapter 13 "dimensional drawings worm-geared motors").

The torques marked (*) are maximum permissible torques for service factor f_B=1,0.

Motor power overload protection
Motor-power ratings, particularly in conjunction with four-stage and multi-stage gear units, are more than ample in some instances. Consequently, and in much the same way as with low-power motors, rated current is not a measure of gear loading and cannot be used to protect the gear unit against overloading. It is advisable to provide gears at risk from excessive load or blockage with a protective mechanism (e. g., slip clutch, slip hub, shear pin or an alternative).

P = 0.03 kW

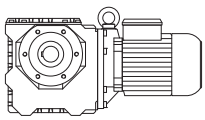

50 Hz			i	Type	m	F_{RN}	F_{RV}	60 Hz		
n_2	M_2	f_B						n_2	M_2	f_B
1/min	Nm				kg	N	N	1/min	Nm	
75	**2.8**	**8.9**	18.00	**BS02-../D04LA4**	3.5	1250	-	90	2.35	11
62	**3.2**	**7.8**	22.00	"	"	1250	-	74	2.7	9.3
50	**3.6**	**6.9**	27.00	"	"	1250	-	60	3.0	8.3
41	**4.15**	**6.0**	33.00	"	"	1250	-	49.5	3.45	7.2
31.5	**5.6**	**4.3**	43.00	"	"	1250	-	38	4.65	5.2
25	**6.5**	**3.4**	54.00	"	"	1250	-	30	5.4	4.1
19.5	**7.4**	**2.7**	70.00	"	"	1250	-	23.5	6.2	3.2
14.5	**11.6**	**3.3**	93.92	**BS04-../D04LA4**	3.9	2250	-	17.5	9.6	4.0
13.5	**13.5**	**2.8**	102.9	"	"	2250	-	16	11.4	3.3
12	**13.6**	**2.8**	117.0	"	"	2250	-	14	11.6	3.3
11	**16.4**	**2.5**	123.0	"	"	2250	-	13.5	13.3	3.1
9.8	**18.1**	**2.3**	138.4	"	"	2250	-	12	14.8	2.8
9.0	**17.5**	**2.2**	150.3	"	"	2250	-	11	14.3	2.7
8.5	**20.5**	**1.8**	160.1	"	"	2250	-	10.5	16.6	2.2
7.8	**19.8**	**2.0**	174.0	"	"	2250	-	9.4	16.4	2.4
6.2	**24**	**1.65**	220.0	"	"	2250	-	7.4	20.5	1.95
5.4	**27.5**	**1.5**	251.6	"	"	2250	-	6.5	22.5	1.8
4.5	**32**	**1.35**	300.7	"	"	2250	-	5.4	27	1.6
4.0	**35.5**	**1.25**	338.3	"	"	2250	-	4.8	29.5	1.5
3.5	**40**	**1.15**	391.3	"	"	2250	-	4.2	33	1.35
5.4	**30.5**	**3.2**	252.0	**BS06-../D04LA4**	8.4	3500	-	6.5	25.5	3.9
4.3	**37.5**	**2.8**	315.3	"	"	3500	-	5.2	31	3.4
3.8	**42**	**2.6**	358.9	"	"	3500	-	4.6	34.5	3.2
3.3	**47.5**	**2.3**	418.0	"	"	3500	-	3.9	40	2.8
2.9	**70**	**1.35**	474.8	**BS06G04-../D04LA4**	11	3500	-	3.5	58	1.6
2.5	**79**	**1.25**	552.6	"	"	3500	-	3.0	65	1.55
2.3	**88**	**1.05**	610.7	"	"	3500	-	2.7	75	1.25
2.0	**101**	**0.93**	704.7	"	"	3500	-	2.3	88	1.05
1.6	**94***	**1.0**	847.0	"	"	3500	-	2.0	94	1.0
1.5	**94***	**1.0**	939.6	"	"	3500	-	1.8	94	1.0
1.2	**94***	**1.0**	1170	"	"	3500	-	1.4	94	1.0
0.9	**94***	**1.0**	1503	"	"	3500	-	1.1	94	1.0
0.85	**94***	**1.0**	1654	"	"	3500	-	1.0	94	1.0
0.75	**94***	**1.0**	1914	"	"	3500	-	0.85	94	1.0
0.65	**94***	**1.0**	2200	"	"	3500	-	0.75	94	1.0
0.49	**94***	**1.0**	2768	"	"	3500	-	0.6	94	1.0
0.45	**94***	**1.0**	3007	"	"	3500	-	0.55	94	1.0
0.41	**94***	**1.0**	3308	"	"	3500	-	0.49	94	1.0
0.37	**94***	**1.0**	3721	"	"	3500	-	0.44	94	1.0
0.32	**94***	**1.0**	4304	"	"	3500	-	0.38	94	1.0
0.28	**98***	**1.0**	4947	"	"	3500	-	0.33	98	1.0
0.25	**98***	**1.0**	5442	"	"	3500	-	0.3	98	1.0
0.22	**100***	**1.0**	6234	"	"	3500	-	0.26	100	1.0
2.5	**67**	**2.8**	544.8	**BS10Z-../D04LA4**	21	6000	-	3.0	56	3.4
2.2	**72**	**2.6**	638.7	"	"	6000	-	2.6	61	3.1
1.8	**85**	**2.1**	788.7	"	"	6000	-	2.1	73	2.5
1.5	**101**	**1.55**	905.6	"	"	6000	-	1.8	84	1.9
1.4	**130**	**1.25**	969.9	**BS10G06-../D04LA4**	25	6000	-	1.7	107	1.5
1.2	**152**	**1.05**	1166	"	"	6000	-	1.4	130	1.25
1.1	**166**	**0.96**	1342	"	"	6000	-	1.3	141	1.15
0.9	**160***	**1.0**	1528	"	"	6000	-	1.1	160	1.0
0.85	**160***	**1.0**	1668	"	"	6000	-	1.0	160	1.0
0.7	**160***	**1.0**	1963	"	"	6000	-	0.85	160	1.0
0.6	**160***	**1.0**	2348	"	"	6000	-	0.7	160	1.0
0.55	**160***	**1.0**	2635	"	"	6000	-	0.65	160	1.0
0.47	**160***	**1.0**	2875	"	"	6000	-	0.6	160	1.0
0.41	**160***	**1.0**	3332	"	"	6000	-	0.49	160	1.0
0.38	**160***	**1.0**	3635	"	"	6000	-	0.45	160	1.0
0.33	**160***	**1.0**	4163	"	"	6000	-	0.39	160	1.0
0.29	**160***	**1.0**	4776	"	"	6000	-	0.34	160	1.0
0.26	**160***	**1.0**	5209	"	"	6000	-	0.32	160	1.0
0.23	**164***	**1.0**	6019	"	"	6000	-	0.27	164	1.0
0.21	**164***	**1.0**	6565	"	"	6000	-	0.25	164	1.0

P = 0.03 kW

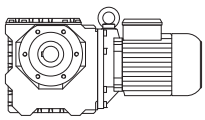

50 Hz			i	Type	m	F_{RN}	F_{RV}	60 Hz		
n_2	M_2	f_B						n_2	M_2	f_B
1/min	Nm				kg	N	N	1/min	Nm	
0.19	**164***	**1.0**	7471	**BS10G06-../D04LA4**	"	6000	-	0.22	164	1.0
0.16	**164***	**1.0**	8703	"	"	6000	-	0.19	164	1.0
1.7	**111**	**2.4**	831.7	**BS20G06-../D04LA4**	35	8000	-	2.0	94	2.9
1.4	**135**	**2.0**	1000	"	"	8000	-	1.7	111	2.4
1.1	**171**	**1.6**	1311	"	"	8000	-	1.3	145	1.85
0.9	**210**	**1.3**	1543	"	"	8000	-	1.1	171	1.6
0.85	**220**	**1.25**	1683	"	"	8000	-	1.0	189	1.45
0.7	**270***	**1.0**	2014	"	"	8000	-	0.85	270	1.0
0.55	**270***	**1.0**	2465	"	"	8000	-	0.7	270	1.0
0.48	**270***	**1.0**	2857	"	"	8000	-	0.6	270	1.0
0.44	**270***	**1.0**	3117	"	"	8000	-	0.55	270	1.0
0.38	**270***	**1.0**	3570	"	"	8000	-	0.46	270	1.0
0.33	**270***	**1.0**	4096	"	"	8000	-	0.4	270	1.0
0.28	**270***	**1.0**	4910	"	"	8000	-	0.33	270	1.0
0.23	**270***	**1.0**	5880	"	"	8000	-	0.28	270	1.0
0.19	**275***	**1.0**	7363	"	"	8000	-	0.23	275	1.0
0.17	**275***	**1.0**	8031	"	"	8000	-	0.21	275	1.0
0.15	**280***	**1.0**	9220	"	"	8000	-	0.18	280	1.0
1.2	**164**	**3.0**	1176	**BS30G06-../D04LA4**	53	10000	-	1.4	141	3.5
0.95	**205**	**2.4**	1461	"	"	10000	-	1.2	164	3.0
0.9	**215**	**2.3**	1576	"	"	10000	-	1.1	179	2.7
0.75	**260**	**1.9**	1886	"	"	10000	-	0.9	215	2.3
0.6	**325**	**1.5**	2308	"	"	10000	-	0.75	260	1.9
0.55	**355**	**1.4**	2518	"	"	10000	-	0.65	300	1.65
0.47	**420**	**1.15**	2919	"	"	10000	-	0.6	325	1.5
0.41	**480**	**1.0**	3344	"	"	10000	-	0.49	400	1.25
0.38	**490***	**1.0**	3647	"	"	10000	-	0.45	490	1.0
0.33	**490***	**1.0**	4184	"	"	10000	-	0.39	490	1.0
0.28	**510***	**1.0**	4905	"	"	10000	-	0.34	510	1.0
0.24	**520***	**1.0**	5783	"	"	10000	-	0.29	520	1.0
0.22	**520***	**1.0**	6308	"	"	10000	-	0.26	520	1.0
0.19	**520***	**1.0**	7179	"	"	10000	-	0.23	520	1.0
0.17	**520***	**1.0**	8362	"	"	10000	-	0.2	520	1.0

P = 0.04 kW

50 Hz			i	Type	m	F_{RN}	F_{RV}	60 Hz		
n_2	M_2	f_B						n_2	M_2	f_B
1/min	Nm				kg	N	N	1/min	Nm	
127	**2.45**	**10**	10.67	**BS02-../D04LA4**	3.5	1250	-	152	2.05	12
100	**2.95**	**8.5**	13.50	"	"	1250	-	120	2.45	10
75	**3.75**	**6.7**	18.00	"	"	1250	-	90	3.1	8.1
62	**4.3**	**5.8**	22.00	"	"	1250	-	74	3.6	6.9
50	**4.8**	**5.2**	27.00	"	"	1250	-	60	4.0	6.3
41	**5.5**	**4.5**	33.00	"	"	1250	-	49.5	4.6	5.4
31.5	**7.5**	**3.2**	43.00	"	"	1250	-	38	6.2	3.9
25	**8.7**	**2.5**	54.00	"	"	1250	-	30	7.2	3.1
19.5	**9.9**	**2.0**	70.00	"	"	1250	-	23.5	8.2	2.4
21.5	**11.1**	**3.2**	64.06	**BS04-../D04LA4**	3.9	2250	-	25.5	9.4	3.8
19	**13.2**	**2.9**	71.18	"	"	2250	-	23	10.9	3.5
18	**12.9**	**2.9**	77.00	"	"	2250	-	21.5	10.8	3.5
14.5	**15.5**	**2.5**	93.92	"	"	2250	-	17.5	12.8	3.0
13.5	**18.1**	**2.1**	102.9	"	"	2250	-	16	15.2	2.5
12	**18.1**	**2.1**	117.0	"	"	2250	-	14	15.5	2.5
11	**21.5**	**1.9**	123.0	"	"	2250	-	13.5	17.8	2.3
9.8	**24**	**1.75**	138.4	"	"	2250	-	12	19.7	2.1
9.0	**23**	**1.7**	150.3	"	"	2250	-	11	19.1	2.0
8.5	**27**	**1.35**	160.1	"	"	2250	-	10.5	22	1.7
7.8	**26**	**1.55**	174.0	"	"	2250	-	9.4	21.5	1.85
6.2	**32.5**	**1.25**	220.0	"	"	2250	-	7.4	27	1.5
5.4	**36.5**	**1.1**	251.6	"	"	2250	-	6.5	30.5	1.35
4.5	**43**	**1.0**	300.7	"	"	2250	-	5.4	36	1.2

P = 0.04 kW

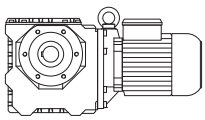

50 Hz			i	Type	m	F_{RN}	F_{RV}	60 Hz		
n_2	M_2	f_B						n_2	M_2	f_B
1/min	Nm				kg	N	N	1/min	Nm	
4.0	**47.5**	**0.93**	338.3	**BS04-../D04LA4**	"	2250	-	4.8	39.5	1.1
3.5	**53**	**0.85**	391.3	"	"	2250	-	4.2	44.5	1.0
7.9	**30.5**	**2.9**	171.0	**BS06-../D04LA4**	8.4	3500	-	9.5	25.5	3.5
6.2	**36**	**2.7**	220.0	"	"	3500	-	7.4	30	3.3
5.4	**41**	**2.4**	252.0	"	"	3500	-	6.5	34	2.9
4.3	**50**	**2.1**	315.3	"	"	3500	-	5.2	41.5	2.6
3.8	**56**	**1.95**	358.9	"	"	3500	-	4.6	46.5	2.4
3.3	**63**	**1.75**	418.0	"	"	3500	-	3.9	53	2.1
2.9	**93**	**1.0**	474.8	**BS06G04-../D04LA4**	11	3500	-	3.5	77	1.2
2.5	**105**	**0.95**	552.6	"	"	3500	-	3.0	87	1.15
2.3	**117**	**0.8**	610.7	"	"	3500	-	2.7	100	0.94
3.8	**62**	**3.1**	360.3	**BS10Z-../D04LA4**	21	6000	-	4.5	52	3.7
3.2	**72**	**2.6**	432.4	"	"	6000	-	3.8	61	3.1
2.5	**90**	**2.1**	544.8	"	"	6000	-	3.0	75	2.5
2.2	**97**	**1.95**	638.7	"	"	6000	-	2.6	82	2.3
1.8	**114**	**1.6**	788.7	"	"	6000	-	2.1	98	1.85
1.5	**134**	**1.2**	905.6	"	"	6000	-	1.8	112	1.4
1.4	**174**	**0.92**	969.9	**BS10G06-../D04LA4**	25	6000	-	1.7	143	1.1
1.2	**200**	**0.8**	1166	"	"	6000	-	1.4	174	0.92
1.8	**114**	**2.7**	763.4	**BS20Z-../D04LA4**	32	8000	-	2.2	93	3.3
1.7	**148**	**1.8**	831.7	**BS20G06-../D04LA4**	35	8000	-	2.0	126	2.1
1.4	**180**	**1.5**	1000	"	"	8000	-	1.7	148	1.8
1.1	**225**	**1.2**	1311	"	"	8000	-	1.3	193	1.4
1.4	**188**	**2.6**	1022	**BS30G06-../D04LA4**	53	10000	-	1.6	164	3.0
1.2	**215**	**2.3**	1176	"	"	10000	-	1.4	188	2.6
0.95	**275**	**1.8**	1461	"	"	10000	-	1.2	215	2.3
0.9	**290**	**1.7**	1576	"	"	10000	-	1.1	235	2.1
0.75	**350**	**1.4**	1886	"	"	10000	-	0.9	290	1.7
0.6	**435**	**1.15**	2308	"	"	10000	-	0.75	350	1.4
0.55	**475**	**1.05**	2518	"	"	10000	-	0.65	405	1.2

P = 0.06 kW

50 Hz			i	Type	m	F_{RN}	F_{RV}	60 Hz		
n_2	M_2	f_B						n_2	M_2	f_B
1/min	Nm				kg	N	N	1/min	Nm	
295	**1.7**	**8.8**	4.60	**BS02-../D04LA4**	3.5	1000	-	355	1.42	11
250	**2.0**	**10**	5.40	"	"	1000	-	300	1.68	12
200	**2.45**	**10**	6.75	"	"	1000	-	240	2.05	12
164	**2.9**	**8.6**	8.25	"	"	1100	-	197	2.4	10
127	**3.65**	**6.8**	10.67	"	"	1250	-	152	3.05	8.2
100	**4.45**	**5.6**	13.50	"	"	1250	-	120	3.7	6.8
75	**5.6**	**4.5**	18.00	"	"	1250	-	90	4.7	5.3
62	**6.4**	**3.9**	22.00	"	"	1250	-	74	5.4	4.6
50	**7.2**	**3.5**	27.00	"	"	1250	-	60	6.0	4.2
41	**8.3**	**3.0**	33.00	"	"	1250	-	49.5	6.9	3.6
31.5	**11.2**	**2.1**	43.00	"	"	1250	-	38	9.3	2.6
25	**13**	**1.7**	54.00	"	"	1250	-	30	10.8	2.0
19.5	**14.9**	**1.35**	70.00	"	"	1250	-	23.5	12.4	1.6
18	**16.2**	**2.5**	75.00	**BS03-../D05LA4**	5.4	1950	-	22	13.2	3.0
35.5	**11.1**	**3.3**	38.42	**BS04-../D04LA4**	3.9	2250	-	42.5	9.3	4.0
28.5	**13.6**	**2.8**	47.86	"	"	2250	-	34	11.4	3.3
21.5	**16.7**	**2.2**	64.06	"	"	2250	-	25.5	14.1	2.6
19	**19.9**	**1.9**	71.18	"	"	2250	-	23	16.4	2.3
18	**19.4**	**1.95**	77.00	"	"	2250	-	21.5	16.2	2.3
14.5	**23**	**1.65**	93.92	"	"	2250	-	17.5	19.3	1.95
13.5	**27**	**1.4**	102.9	"	"	2250	-	16	22.5	1.7
12	**27**	**1.4**	117.0	"	"	2250	-	14	23	1.65
11	**32.5**	**1.25**	123.0	"	"	2250	-	13.5	26.5	1.55

P = 0.06 kW

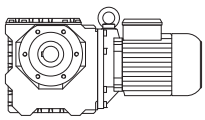

50 Hz			i	Type	m	F_{RN}	F_{RV}	60 Hz		
n_2	M_2	f_B						n_2	M_2	f_B
1/min	Nm				kg	N	N	1/min	Nm	
9.8	**36**	**1.15**	138.4	**BS04-../D04LA4**	"	2250	-	12	29.5	1.4
9.0	**35**	**1.1**	150.3	"	"	2250	-	11	28.5	1.35
8.5	**41**	**0.9**	160.1	"	"	2250	-	10.5	33	1.1
7.8	**39.5**	**1.0**	174.0	"	"	2250	-	9.4	32.5	1.25
6.2	**48.5**	**0.82**	220.0	"	"	2250	-	7.4	41	0.98
11.5	**32**	**2.9**	118.8	**BS06-../D04LA4**	8.4	3500	-	14	26.5	3.5
10.5	**36.5**	**2.8**	129.0	"	"	3500	-	13	29.5	3.5
9.2	**40**	**2.7**	146.8	"	"	3500	-	11.5	32	3.3
7.8	**44**	**2.2**	174.0	"	"	3500	-	9.4	36.5	2.7
6.2	**54**	**1.8**	220.0	"	"	3500	-	7.4	45.5	2.2
5.4	**61**	**1.6**	252.0	"	"	3500	-	6.5	51	1.95
4.3	**75**	**1.4**	315.3	"	"	3500	-	5.2	62	1.7
3.8	**84**	**1.3**	358.9	"	"	3500	-	4.6	69	1.6
3.3	**95**	**1.15**	418.0	"	"	3500	-	3.9	80	1.4
11.5	**36.5**	**3.3**	119.6	**BS10-../D06LA4**	23	6000	-	14	30	4.0
6.3	**58**	**3.1**	216.6	"	"	6000	-	7.5	48.5	3.7
5.4	**67**	**2.7**	254.0	**BS10Z-../D06LA4**	24	6000	-	6.4	57	3.2
4.5	**78**	**2.4**	302.5	"	"	6000	-	5.4	65	2.9
3.8	**93**	**2.0**	360.3	"	"	6000	-	4.5	78	2.4
3.2	**109**	**1.75**	432.4	"	"	6000	-	3.8	91	2.1
2.5	**135**	**1.4**	544.8	"	"	6000	-	3.0	112	1.7
2.2	**145**	**1.3**	638.7	"	"	6000	-	2.6	123	1.55
1.8	**171**	**1.05**	788.7	"	"	6000	-	2.1	147	1.2
3.2	**109**	**3.0**	430.8	**BS20Z-../D06LA4**	35	8000	-	3.8	91	3.6
2.6	**121**	**3.0**	539.7	"	"	8000	-	3.1	101	3.6
2.2	**140**	**2.4**	619.2	"	"	8000	-	2.7	114	2.9
1.8	**171**	**1.8**	763.4	"	"	8000	-	2.2	140	2.2
1.7	**220**	**1.25**	831.7	**BS20G06-../D06LA4**	38	8000	-	2.0	189	1.45
1.4	**270**	**1.0**	1000	"	"	8000	-	1.7	220	1.25
1.7	**195**	**2.4**	804.1	**BS30Z-../D06LA4**	54	10000	-	2.1	158	3.0
1.5	**215**	**2.1**	932.0	"	"	10000	-	1.8	181	2.5
1.4	**280**	**1.75**	1022	**BS30G06-../D06LA4**	56	10000	-	1.6	245	2.0
1.2	**325**	**1.5**	1176	"	"	10000	-	1.4	280	1.75
0.95	**415**	**1.2**	1461	"	"	10000	-	1.2	325	1.5
0.9	**435**	**1.15**	1576	"	"	10000	-	1.1	355	1.4
1.5	**225**	**3.3**	908.2	**BS40Z-../D06LA4**	68	15000	-	1.8	187	4.0
1.4	**285**	**3.1**	965.5	**BS40G10-../D06LA4**	73	15000	-	1.7	235	3.7
1.2	**330**	**2.7**	1180	"	"	15000	-	1.4	285	3.1
0.95	**420**	**2.1**	1499	"	"	15000	-	1.1	360	2.4
0.8	**500**	**1.75**	1785	"	"	15000	-	0.95	420	2.1
0.65	**610**	**1.45**	2126	"	"	15000	-	0.8	500	1.75
0.6	**660**	**1.35**	2304	"	"	15000	-	0.75	530	1.65
0.55	**720**	**1.2**	2552	"	"	15000	-	0.65	610	1.45
0.47	**850**	**1.05**	2902	"	"	15000	-	0.6	660	1.35

P = 0.09 kW

50 Hz			i	Type	m	F_{RN}	F_{RV}	60 Hz		
n_2	M_2	f_B						n_2	M_2	f_B
1/min	Nm				kg	N	N	1/min	Nm	
295	**2.55**	**5.9**	4.60	**BS02-../D04LA4**	3.5	1000	-	355	2.1	7.1
250	**3.0**	**6.7**	5.40	"	"	1000	-	300	2.5	8.0
200	**3.65**	**6.8**	6.75	"	"	1000	-	240	3.05	8.2
164	**4.4**	**5.7**	8.25	"	"	1100	-	197	3.65	6.8
127	**5.5**	**4.5**	10.67	"	"	1250	-	152	4.6	5.4
100	**6.7**	**3.7**	13.50	"	"	1250	-	120	5.5	4.5
75	**8.4**	**3.0**	18.00	"	"	1250	-	90	7.0	3.6
62	**9.7**	**2.6**	22.00	"	"	1250	-	74	8.1	3.1
50	**10.8**	**2.3**	27.00	"	"	1250	-	60	9.0	2.8
41	**12.5**	**2.0**	33.00	"	"	1250	-	49.5	10.4	2.4

P = 0.09 kW

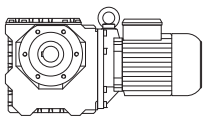

50 Hz			i	Type	m	F_{RN}	F_{RV}	60 Hz		
n_2	M_2	f_B						n_2	M_2	f_B
1/min	Nm				kg	N	N	1/min	Nm	
31.5	**16.9**	**1.4**	43.00	**BS02-../D04LA4**	"	1250	-	38	14	1.7
25	**19.5**	**1.15**	54.00	"	"	1250	-	30	16.3	1.35
19.5	**22**	**0.91**	70.00	"	"	1250	-	23.5	18.6	1.1
27	**18.4**	**3.0**	50.00	**BS03-../D05LA4**	5.4	1950	-	32.5	15.3	3.6
22	**20.5**	**2.3**	62.00	"	"	1950	-	26.5	17.1	2.8
18	**24**	**1.65**	75.00	"	"	1950	-	22	19.9	2.0
56	**11.6**	**2.9**	24.25	**BS04-../D04LA4**	3.9	2250	-	67	9.7	3.5
52	**11.7**	**3.2**	26.21	"	"	2250	-	62	9.8	3.9
43	**13.9**	**2.7**	31.50	"	"	2250	-	52	11.5	3.3
35.5	**16.7**	**2.2**	38.42	"	"	2250	-	42.5	13.9	2.7
28.5	**20.5**	**1.85**	47.86	"	"	2250	-	34	17.1	2.2
21.5	**25**	**1.45**	64.06	"	"	2250	-	25.5	21	1.7
19	**29.5**	**1.3**	71.18	"	"	2250	-	23	24.5	1.55
18	**29**	**1.3**	77.00	"	"	2250	-	21.5	24	1.6
14.5	**34.5**	**1.1**	93.92	"	"	2250	-	17.5	28.5	1.35
13.5	**40.5**	**0.94**	102.9	"	"	2250	-	16	34	1.1
12	**40.5**	**0.94**	117.0	"	"	2250	-	14	34.5	1.1
11	**49**	**0.84**	123.0	"	"	2250	-	13.5	40	1.05
21.5	**27**	**3.0**	64.06	**BS06-../D04LA4**	8.4	3500	-	25.5	22.5	3.6
19	**32**	**2.9**	71.18	"	"	3500	-	23	26.5	3.5
18	**31.5**	**2.7**	77.00	"	"	3500	-	21.5	26.5	3.2
15	**40**	**2.5**	90.00	"	"	3500	-	18	33	3.0
13.5	**43.5**	**2.3**	103.1	"	"	3500	-	16	37	2.7
11.5	**48.5**	**1.95**	118.8	"	"	3500	-	14	39.5	2.4
10.5	**54**	**1.95**	129.0	"	"	3500	-	13	44	2.4
9.2	**60**	**1.75**	146.8	"	"	3500	-	11.5	48.5	2.2
7.8	**66**	**1.5**	174.0	"	"	3500	-	9.4	54	1.8
6.2	**81**	**1.2**	220.0	"	"	3500	-	7.4	68	1.45
5.4	**92**	**1.1**	252.0	"	"	3500	-	6.5	76	1.3
4.3	**113**	**0.94**	315.3	"	"	3500	-	5.2	94	1.15
3.8	**126**	**0.87**	358.9	"	"	3500	-	4.6	104	1.05
11.5	**55**	**2.2**	119.6	**BS10-../D06LA4**	23	6000	-	14	45	2.7
10.5	**52**	**3.2**	130.3	"	"	6000	-	12.5	44	3.7
8.9	**61**	**2.7**	152.7	"	"	6000	-	11	50	3.3
7.2	**76**	**2.2**	188.6	"	"	6000	-	8.6	63	2.7
6.3	**87**	**2.1**	216.6	"	"	6000	-	7.5	73	2.5
5.4	**101**	**1.8**	254.0	**BS10Z-../D06LA4**	24	6000	-	6.4	85	2.1
4.5	**118**	**1.6**	302.5	"	"	6000	-	5.4	98	1.95
3.8	**140**	**1.35**	360.3	"	"	6000	-	4.5	118	1.6
3.2	**163**	**1.15**	432.4	"	"	6000	-	3.8	137	1.4
2.5	**200**	**0.95**	544.8	"	"	6000	-	3.0	169	1.1
2.2	**215**	**0.88**	638.7	"	"	6000	-	2.6	185	1.05
6.0	**91**	**3.2**	225.6	**BS20-../D06LA4**	34	8000	-	7.2	76	3.8
5.3	**103**	**2.9**	257.8	**BS20Z-../D06LA4**	35	8000	-	6.3	87	3.4
4.5	**120**	**2.5**	300.1	"	"	8000	-	5.4	100	3.0
3.8	**140**	**2.3**	359.9	"	"	8000	-	4.6	115	2.8
3.2	**163**	**2.0**	430.8	"	"	8000	-	3.8	137	2.4
2.6	**181**	**2.0**	539.7	"	"	8000	-	3.1	152	2.4
2.2	**210**	**1.55**	619.2	"	"	8000	-	2.7	171	1.95
1.8	**255**	**1.2**	763.4	"	"	8000	-	2.2	210	1.5
1.7	**330**	**0.82**	831.7	**BS20G06-../D06LA4**	38	8000	-	2.0	280	0.96
3.8	**167**	**2.4**	359.6	**BS30Z-../D06LA4**	54	10000	-	4.6	138	2.9
3.0	**183**	**3.3**	457.3	"	"	10000	-	3.6	152	3.9
2.6	**210**	**2.9**	539.3	"	"	10000	-	3.1	177	3.4
2.1	**245**	**2.4**	651.0	"	"	10000	-	2.5	205	2.8
1.7	**290**	**1.65**	804.1	"	"	10000	-	2.1	235	2.0
1.5	**325**	**1.4**	932.0	"	"	10000	-	1.8	270	1.65
1.4	**420**	**1.15**	1022	**BS30G06-../D06LA4**	56	10000	-	1.6	370	1.3
1.2	**490**	**1.0**	1176	"	"	10000	-	1.4	420	1.15

BS-series worm-geared motors

Selection - worm-geared motors DSE - IE1

P = 0.09kW

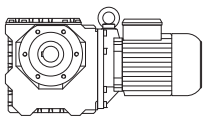

50 Hz			i	Type	m	F_{RN}	F_{RV}	60 Hz		
n_2	M_2	f_B						n_2	M_2	f_B
1/min	Nm				kg	N	N	1/min	Nm	
1.9	**270**	**2.8**	736.5	**BS40Z-../D06LA4**	68	15000	-	2.2	230	3.3
1.5	**335**	**2.2**	908.2	"	"	15000	-	1.8	280	2.7
1.4	**425**	**2.1**	965.5	**BS40G10-../D06LA4**	73	15000	-	1.7	350	2.5
1.2	**500**	**1.75**	1180	"	"	15000	-	1.4	425	2.1
0.95	**630**	**1.4**	1499	"	"	15000	-	1.1	540	1.65
0.8	**750**	**1.15**	1785	"	"	15000	-	0.95	630	1.4

P = 0.12kW

50 Hz			i	Type	m	F_{RN}	F_{RV}	60 Hz		
n_2	M_2	f_B						n_2	M_2	f_B
1/min	Nm				kg	N	N	1/min	Nm	
295	**3.4**	**4.4**	4.60	**BS02-../D04LA4**	3.5	1000	-	355	2.8	5.4
250	**4.0**	**5.0**	5.40	"	"	1000	-	300	3.35	6.0
200	**4.9**	**5.1**	6.75	"	"	1000	-	240	4.1	6.1
164	**5.8**	**4.3**	8.25	"	"	1100	-	197	4.85	5.2
127	**7.3**	**3.4**	10.67	"	"	1250	-	152	6.1	4.1
100	**8.9**	**2.8**	13.50	"	"	1250	-	120	7.4	3.4
75	**11.3**	**2.2**	18.00	"	"	1250	-	90	9.4	2.7
62	**12.9**	**1.95**	22.00	"	"	1250	-	74	10.8	2.3
50	**14.4**	**1.75**	27.00	"	"	1250	-	60	12	2.1
41	**16.7**	**1.5**	33.00	"	"	1250	-	49.5	13.8	1.8
31.5	**22.5**	**1.05**	43.00	"	"	1250	-	38	18.6	1.3
25	**26**	**0.85**	54.00	"	"	1250	-	30	21.5	1.0
41	**17**	**3.2**	33.00	**BS03-../D05LA4**	5.4	1950	-	49.5	14.1	3.9
35	**20.5**	**2.7**	39.00	"	"	1950	-	42	17.4	3.2
27	**24.5**	**2.2**	50.00	"	"	1950	-	32.5	20	2.8
22	**27.5**	**1.75**	62.00	"	"	1950	-	26.5	22.5	2.1
18	**32**	**1.25**	75.00	"	"	1950	-	22	26.5	1.5
83	**10.6**	**3.3**	16.31	**BS04-../D04LA4**	3.9	1970	-	100	8.8	4.0
65	**13.3**	**2.8**	20.96	"	"	2100	-	78	11.1	3.3
56	**15.5**	**2.2**	24.25	"	"	2250	-	67	12.9	2.6
52	**15.6**	**2.4**	26.21	"	"	2250	-	62	13.1	2.9
43	**18.6**	**2.0**	31.50	"	"	2250	-	52	15.4	2.5
35.5	**22**	**1.7**	38.42	"	"	2250	-	42.5	18.6	2.0
28.5	**27**	**1.4**	47.86	"	"	2250	-	34	22.5	1.7
21.5	**33.5**	**1.05**	64.06	"	"	2250	-	25.5	28	1.3
19	**39.5**	**0.96**	71.18	"	"	2250	-	23	32.5	1.15
18	**38.5**	**0.99**	77.00	"	"	2250	-	21.5	32.5	1.15
14.5	**46.5**	**0.82**	93.92	"	"	2250	-	17.5	38.5	0.99
28	**29**	**3.0**	48.60	**BS06-../D04LA4**	8.4	3500	-	33.5	24.5	3.6
23.5	**34.5**	**2.6**	58.15	"	"	3500	-	28	29	3.1
21.5	**36**	**2.2**	64.06	"	"	3500	-	25.5	30.5	2.6
19	**42.5**	**2.2**	71.18	"	"	3500	-	23	35	2.7
18	**42.5**	**2.0**	77.00	"	"	3500	-	21.5	35.5	2.4
15	**53**	**1.85**	90.00	"	"	3500	-	18	44.5	2.2
13.5	**58**	**1.7**	103.1	"	"	3500	-	16	49	2.0
11.5	**64**	**1.45**	118.8	"	"	3500	-	14	53	1.75
10.5	**73**	**1.4**	129.0	"	"	3500	-	13	59	1.75
9.2	**80**	**1.35**	146.8	"	"	3500	-	11.5	64	1.65
7.8	**88**	**1.1**	174.0	"	"	3500	-	9.4	73	1.35
6.2	**109**	**0.9**	220.0	"	"	3500	-	7.4	91	1.1
5.4	**123**	**0.8**	252.0	"	"	3500	-	6.5	102	0.97
16.5	**51**	**2.9**	84.36	**BS10-../D06LA4**	23	5300	-	19.5	43	3.5
13.5	**54**	**3.0**	103.4	"	"	5600	-	16	45.5	3.5
11.5	**73**	**1.65**	119.6	"	"	6000	-	14	60	2.0
10.5	**69**	**2.4**	130.3	"	"	6000	-	12.5	58	2.8
8.9	**82**	**2.0**	152.7	"	"	6000	-	11	66	2.5
7.2	**101**	**1.7**	188.6	"	"	6000	-	8.6	85	2.0
6.3	**116**	**1.55**	216.6	"	"	6000	-	7.5	97	1.85

P = 0.12 kW

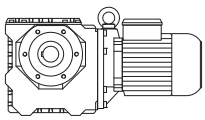

50 Hz			i	Type	m	F_{RN}	F_{RV}	60 Hz		
n_2	M_2	f_B						n_2	M_2	f_B
1/min	Nm				kg	N	N	1/min	Nm	
5.4	**135**	**1.35**	254.0	**BS10Z-../D06LA4**	24	6000	-	6.4	114	1.6
4.5	**157**	**1.2**	302.5	"	"	6000	-	5.4	131	1.45
3.8	**186**	**1.0**	360.3	"	"	6000	-	4.5	157	1.2
3.2	**215**	**0.88**	432.4	"	"	6000	-	3.8	183	1.05
8.5	**88**	**3.1**	159.4	**BS20-../D06LA4**	34	8000	-	10.5	72	3.8
7.4	**102**	**2.7**	183.0	"	"	8000	-	8.9	84	3.3
6.0	**122**	**2.4**	225.6	"	"	8000	-	7.2	101	2.9
5.3	**138**	**2.1**	257.8	**BS20Z-../D06LA4**	35	8000	-	6.3	116	2.5
4.5	**160**	**1.9**	300.1	"	"	8000	-	5.4	133	2.3
3.8	**186**	**1.7**	359.9	"	"	8000	-	4.6	154	2.1
3.2	**215**	**1.55**	430.8	"	"	8000	-	3.8	183	1.8
2.6	**240**	**1.5**	539.7	"	"	8000	-	3.1	200	1.85
2.2	**280**	**1.2**	619.2	"	"	8000	-	2.7	225	1.45
1.8	**340**	**0.91**	763.4	"	"	8000	-	2.2	280	1.1
3.8	**220**	**1.8**	359.6	**BS30Z-../D06LA4**	54	10000	-	4.6	184	2.1
3.5	**210**	**2.8**	390.2	"	"	10000	-	4.2	177	3.3
3.0	**240**	**2.5**	457.3	"	"	10000	-	3.6	200	3.0
2.6	**280**	**2.1**	539.3	"	"	10000	-	3.1	235	2.6
2.1	**325**	**1.8**	651.0	"	"	10000	-	2.5	275	2.1
1.7	**390**	**1.2**	804.1	"	"	10000	-	2.1	315	1.5
1.5	**435**	**1.05**	932.0	"	"	10000	-	1.8	360	1.25
1.4	**560**	**0.88**	1022	**BS30G06-../D06LA4**	56	10000	-	1.6	490	1.0
2.3	**300**	**3.0**	612.1	**BS40Z-../D06LA4**	68	15000	-	2.7	255	3.6
1.9	**360**	**2.1**	736.5	"	"	15000	-	2.2	310	2.4
1.5	**450**	**1.65**	908.2	"	"	15000	-	1.8	375	2.0
1.4	**570**	**1.55**	965.5	**BS40G10-../D06LA4**	73	15000	-	1.7	470	1.85
1.2	**660**	**1.35**	1180	"	"	15000	-	1.4	570	1.55
0.95	**840**	**1.05**	1499	"	"	15000	-	1.1	720	1.2

P = 0.18 kW

50 Hz			i	Type	m	F_{RN}	F_{RV}	60 Hz		
n_2	M_2	f_B						n_2	M_2	f_B
1/min	Nm				kg	N	N	1/min	Nm	
295	**5.1**	**2.9**	4.60	**BS02-../D05LA4**	5.3	1000	-	355	4.25	3.5
250	**6.0**	**3.3**	5.40	"	"	1000	-	300	5.0	4.0
200	**7.3**	**3.4**	6.75	"	"	1000	-	240	6.1	4.1
164	**8.8**	**2.8**	8.25	"	"	1100	-	197	7.3	3.4
127	**11**	**2.3**	10.67	"	"	1250	-	152	9.2	2.7
100	**13.4**	**1.85**	13.50	"	"	1250	-	120	11.1	2.3
75	**16.9**	**1.5**	18.00	"	"	1250	-	90	14.1	1.75
62	**19.4**	**1.3**	22.00	"	"	1250	-	74	16.2	1.55
50	**21.5**	**1.15**	27.00	"	"	1250	-	60	18	1.4
41	**25**	**1.0**	33.00	"	"	1250	-	49.5	20.5	1.2
72	**18.1**	**3.0**	19.00	**BS03-../D05LA4**	5.4	1950	-	86	15.1	3.6
54	**21.5**	**2.6**	25.00	"	"	1950	-	65	18.2	3.0
41	**25.5**	**2.2**	33.00	"	"	1950	-	49.5	21	2.6
35	**31**	**1.75**	39.00	"	"	1950	-	42	26	2.1
27	**36.5**	**1.5**	50.00	"	"	1950	-	32.5	30.5	1.8
22	**41**	**1.15**	62.00	"	"	1950	-	26.5	34	1.4
18	**48.5**	**0.82**	75.00	"	"	1950	-	22	39.5	1.0
126	**10.6**	**3.0**	10.73	**BS04-../D05LA4**	5.8	1600	-	151	8.8	3.6
104	**12.7**	**2.6**	13.09	"	"	1760	-	124	10.6	3.1
83	**15.9**	**2.2**	16.31	"	"	1970	-	100	13.2	2.7
65	**20**	**1.85**	20.96	"	"	2100	-	78	16.7	2.2
56	**23**	**1.5**	24.25	"	"	2250	-	67	19.4	1.75
52	**23**	**1.65**	26.21	"	"	2250	-	62	19.6	1.95
43	**27.5**	**1.4**	31.50	"	"	2250	-	52	23	1.65
35.5	**33**	**1.1**	38.42	"	"	2250	-	42.5	27.5	1.35
28.5	**41**	**0.93**	47.86	"	"	2250	-	34	34	1.1

P = 0.18 kW

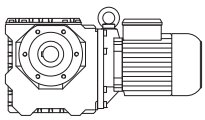

50 Hz			i	Type	m	F_{RN}	F_{RV}	60 Hz		
n_2	M_2	f_B						n_2	M_2	f_B
1/min	Nm				kg	N	N	1/min	Nm	
56	**24.5**	**3.1**	24.25	**BS06-../D05LA4**	10	2600	-	67	20.5	3.8
52	**24**	**3.2**	26.21	"	"	3000	-	62	20	3.9
43	**29**	**2.8**	31.50	"	"	3200	-	52	24	3.3
33	**37.5**	**2.3**	41.29	"	"	3500	-	39.5	31	2.8
28	**44**	**2.0**	48.60	"	"	3500	-	33.5	36.5	2.4
23.5	**51**	**1.8**	58.15	"	"	3500	-	28	43.5	2.1
21.5	**54**	**1.5**	64.06	"	"	3500	-	25.5	45.5	1.75
19	**64**	**1.45**	71.18	"	"	3500	-	23	53	1.75
18	**63**	**1.35**	77.00	"	"	3500	-	21.5	53	1.6
15	**80**	**1.25**	90.00	"	"	3500	-	18	66	1.5
13.5	**87**	**1.15**	103.1	"	"	3500	-	16	74	1.35
11.5	**97**	**0.97**	118.8	"	"	3500	-	14	79	1.2
10.5	**109**	**0.95**	129.0	"	"	3500	-	13	88	1.2
9.2	**121**	**0.88**	146.8	"	"	3500	-	11.5	97	1.1
28.5	**45**	**3.2**	47.59	**BS10-../D06LA4**	23	4050	-	34.5	37	3.9
24	**53**	**2.8**	57.12	"	"	4350	-	28.5	44.5	3.4
22.5	**51**	**2.9**	60.74	"	"	4550	-	27	42.5	3.5
19	**66**	**2.4**	71.96	"	"	5000	-	23	55	2.9
16.5	**77**	**1.95**	84.36	"	"	5300	-	19.5	65	2.3
13.5	**81**	**2.0**	103.4	"	"	5600	-	16	68	2.4
11.5	**110**	**1.1**	119.6	"	"	6000	-	14	90	1.35
10.5	**104**	**1.6**	130.3	"	"	6000	-	12.5	88	1.85
8.9	**123**	**1.35**	152.7	"	"	6000	-	11	100	1.65
7.2	**152**	**1.1**	188.6	"	"	6000	-	8.6	127	1.35
6.3	**174**	**1.05**	216.6	"	"	6000	-	7.5	146	1.25
5.4	**200**	**0.9**	254.0	**BS10Z-../D06LA4**	24	6000	-	6.4	171	1.05
4.5	**235**	**0.81**	302.5	"	"	6000	-	5.4	197	0.96
13	**87**	**3.1**	106.3	**BS20-../D06LA4**	34	7600	-	15.5	73	3.7
11	**103**	**2.6**	127.3	"	"	8000	-	13	87	3.1
8.5	**133**	**2.1**	159.4	"	"	8000	-	10.5	108	2.5
7.4	**153**	**1.85**	183.0	"	"	8000	-	8.9	127	2.2
6.0	**183**	**1.6**	225.6	"	"	8000	-	7.2	152	1.9
5.3	**205**	**1.45**	257.8	**BS20Z-../D06LA4**	35	8000	-	6.3	174	1.7
4.5	**240**	**1.25**	300.1	"	"	8000	-	5.4	200	1.5
3.8	**280**	**1.15**	359.9	"	"	8000	-	4.6	230	1.4
3.2	**325**	**1.0**	430.8	"	"	8000	-	3.8	275	1.2
2.6	**360**	**1.0**	539.7	"	"	8000	-	3.1	300	1.2
6.3	**180**	**2.9**	216.4	**BS30-../D06LA4**	51	10000	-	7.5	151	3.4
5.2	**215**	**2.6**	261.6	**BS30Z-../D06LA4**	54	10000	-	6.2	182	3.1
4.5	**245**	**2.4**	306.6	"	"	10000	-	5.3	210	2.8
3.8	**330**	**1.2**	359.6	"	"	10000	-	4.6	275	1.45
3.5	**315**	**1.85**	390.2	"	"	10000	-	4.2	265	2.2
3.0	**365**	**1.65**	457.3	"	"	10000	-	3.6	305	1.95
2.6	**420**	**1.45**	539.3	"	"	10000	-	3.1	350	1.7
2.1	**490**	**1.2**	651.0	"	"	10000	-	2.5	410	1.4
1.7	**580**	**0.82**	804.1	"	"	10000	-	2.1	470	1.0
4.7	**270**	**2.6**	287.7	**BS40Z-../D06LA4**	68	15000	-	5.7	220	3.3
3.1	**345**	**2.9**	446.8	"	"	15000	-	3.7	290	3.4
2.6	**415**	**2.7**	520.8	"	"	15000	-	3.2	335	3.3
2.3	**455**	**2.0**	612.1	"	"	15000	-	2.7	385	2.4
1.9	**540**	**1.4**	736.5	"	"	15000	-	2.2	465	1.65
1.5	**670**	**1.1**	908.2	"	"	15000	-	1.8	560	1.35
1.4	**850**	**1.05**	965.5	**BS40G10-../D06LA4**	73	15000	-	1.7	700	1.25
1.2	**1000**	**0.88**	1180	"	"	15000	-	1.4	850	1.05

P = 0.25 kW

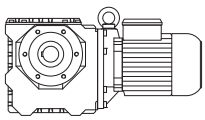

50 Hz			i	Type	m	F_{RN}	F_{RV}	60 Hz		
n_2	M_2	f_B						n_2	M_2	f_B
1/min	Nm				kg	N	N	1/min	Nm	
295	**7.1**	**2.1**	4.60	**BS02-../D05LA4**	5.3	1000	-	355	5.9	2.5
250	**8.4**	**2.4**	5.40	"	"	1000	-	300	7.0	2.9
200	**10.2**	**2.5**	6.75	"	"	1000	-	240	8.5	2.9
164	**12.2**	**2.0**	8.25	"	"	1100	-	197	10.1	2.5
127	**15.4**	**1.6**	10.67	"	"	1250	-	152	12.8	1.95
100	**18.6**	**1.35**	13.50	"	"	1250	-	120	15.5	1.6
75	**23.5**	**1.05**	18.00	"	"	1250	-	90	19.6	1.3
62	**26.5**	**0.94**	22.00	"	"	1250	-	74	22.5	1.1
50	**30**	**0.83**	27.00	"	"	1250	-	60	25	1.0
100	**18.6**	**3.0**	13.50	**BS03-../D05LA4**	5.4	1600	-	120	15.5	3.5
72	**25**	**2.2**	19.00	"	"	1950	-	86	21	2.6
54	**30.5**	**1.8**	25.00	"	"	1950	-	65	25	2.2
41	**35.5**	**1.55**	33.00	"	"	1950	-	49.5	29	1.9
35	**43.5**	**1.25**	39.00	"	"	1950	-	42	36	1.55
27	**51**	**1.1**	50.00	"	"	1950	-	32.5	42.5	1.3
22	**57**	**0.84**	62.00	"	"	1950	-	26.5	47.5	1.0
225	**8.2**	**3.2**	6.13	**BS04-../D05LA4**	5.8	1320	-	265	7.0	3.7
152	**12.2**	**2.5**	8.93	"	"	1500	-	182	10.2	2.9
126	**14.7**	**2.2**	10.73	"	"	1600	-	151	12.3	2.6
104	**17.6**	**1.9**	13.09	"	"	1760	-	124	14.8	2.2
83	**22**	**1.6**	16.31	"	"	1970	-	100	18.3	1.9
65	**27.5**	**1.35**	20.96	"	"	2100	-	78	23	1.6
56	**32**	**1.05**	24.25	"	"	2250	-	67	27	1.25
52	**32.5**	**1.15**	26.21	"	"	2250	-	62	27	1.4
43	**38.5**	**0.99**	31.50	"	"	2250	-	52	32	1.2
35.5	**46**	**0.8**	38.42	"	"	2250	-	42.5	38.5	0.96
82	**23**	**3.1**	16.56	**BS06-../D05LA4**	10	2400	-	98	19.4	3.7
69	**27.5**	**2.7**	19.82	"	"	2500	-	82	23	3.3
56	**34**	**2.3**	24.25	"	"	2600	-	67	28.5	2.7
52	**33.5**	**2.3**	26.21	"	"	3000	-	62	28	2.8
43	**40.5**	**2.0**	31.50	"	"	3200	-	52	33.5	2.4
33	**52**	**1.65**	41.29	"	"	3500	-	39.5	43.5	2.0
28	**61**	**1.45**	48.60	"	"	3500	-	33.5	51	1.75
23.5	**72**	**1.25**	58.15	"	"	3500	-	28	60	1.5
21.5	**75**	**1.05**	64.06	"	"	3500	-	25.5	63	1.25
19	**89**	**1.05**	71.18	"	"	3500	-	23	73	1.3
18	**88**	**0.97**	77.00	"	"	3500	-	21.5	74	1.15
15	**111**	**0.88**	90.00	"	"	3500	-	18	92	1.05
13.5	**122**	**0.82**	103.1	"	"	3500	-	16	102	0.98
40.5	**44.5**	**3.0**	33.55	**BS10-../D06LA4**	23	3550	-	48.5	37	3.6
34	**52**	**2.7**	39.96	"	"	3800	-	41	43.5	3.2
28.5	**62**	**2.3**	47.59	"	"	4050	-	34.5	51	2.8
24	**73**	**2.1**	57.12	"	"	4350	-	28.5	61	2.5
22.5	**71**	**2.1**	60.74	"	"	4550	-	27	59	2.5
19	**92**	**1.75**	71.96	"	"	5000	-	23	76	2.1
16.5	**107**	**1.4**	84.36	"	"	5300	-	19.5	90	1.65
13.5	**113**	**1.4**	103.4	"	"	5600	-	16	95	1.7
10.5	**145**	**1.15**	130.3	"	"	6000	-	12.5	122	1.35
8.9	**171**	**0.96**	152.7	"	"	6000	-	11	138	1.2
7.2	**210**	**0.81**	188.6	"	"	6000	-	8.6	177	0.96
19.5	**91**	**3.3**	70.30	**BS20-../D06LA4**	34	6300	-	23.5	76	3.9
18	**87**	**3.1**	76.18	"	"	6600	-	21.5	73	3.7
15.5	**101**	**2.7**	88.67	"	"	7000	-	18.5	85	3.2
13	**121**	**2.2**	106.3	"	"	7600	-	15.5	101	2.7
11	**143**	**1.9**	127.3	"	"	8000	-	13	121	2.2
8.5	**185**	**1.5**	159.4	"	"	8000	-	10.5	150	1.85
7.4	**210**	**1.35**	183.0	"	"	8000	-	8.9	177	1.6
6.0	**250**	**1.15**	225.6	"	"	8000	-	7.2	210	1.4
5.3	**285**	**1.05**	257.8	**BS20Z-../D06LA4**	35	8000	-	6.3	240	1.25
4.5	**330**	**0.91**	300.1	"	"	8000	-	5.4	275	1.1
3.8	**385**	**0.83**	359.9	"	"	8000	-	4.6	320	1.0

P = 0.25 kW

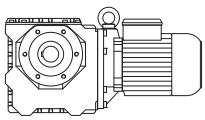

50 Hz			i	Type	m	F_{RN}	F_{RV}	60 Hz		
n_2	M_2	f_B						n_2	M_2	f_B
1/min	Nm				kg	N	N	1/min	Nm	
9.0	**177**	**3.1**	151.1	**BS30-../D06LA4**	51	9500	-	11	145	3.7
7.3	**215**	**2.5**	186.7	"	"	10000	-	8.7	181	3.0
6.3	**250**	**2.1**	216.4	"	"	10000	-	7.5	210	2.5
5.2	**300**	**1.85**	261.6	**BS30Z-../D06LA4**	54	10000	-	6.2	250	2.2
4.5	**340**	**1.7**	306.6	"	"	10000	-	5.3	290	2.0
3.8	**460**	**0.86**	359.6	"	"	10000	-	4.6	380	1.05
3.5	**440**	**1.35**	390.2	"	"	10000	-	4.2	365	1.6
3.0	**500**	**1.2**	457.3	"	"	10000	-	3.6	420	1.45
2.6	**580**	**1.05**	539.3	"	"	10000	-	3.1	490	1.2
2.1	**680**	**0.85**	651.0	"	"	10000	-	2.5	570	1.0
6.9	**255**	**2.7**	197.1	**BS40Z-../D06LA4**	68	15000	-	8.3	210	3.3
5.5	**270**	**3.3**	249.6	"	"	15000	-	6.5	230	3.9
4.7	**375**	**1.9**	287.7	"	"	15000	-	5.7	305	2.3
4.5	**330**	**3.2**	302.1	"	"	15000	-	5.4	275	3.9
3.8	**395**	**2.7**	356.8	"	"	15000	-	4.6	325	3.3
3.1	**485**	**2.0**	446.8	"	"	15000	-	3.7	405	2.4
2.6	**570**	**1.95**	520.8	"	"	15000	-	3.2	470	2.3
2.3	**630**	**1.45**	612.1	"	"	15000	-	2.7	530	1.7
1.9	**750**	**1.0**	736.5	"	"	15000	-	2.2	650	1.15
1.5	**930**	**0.8**	908.2	"	"	15000	-	1.8	780	0.95

P = 0.3 kW

50 Hz			i	Type	m	F_{RN}	F_{RV}	60 Hz		
n_2	M_2	f_B						n_2	M_2	f_B
1/min	Nm				kg	N	N	1/min	Nm	
295	**8.5**	**1.75**	4.60	**BS02-../D07LA4**	9.3	1000	-	355	7.1	2.1
250	**10**	**2.0**	5.40	"	"	1000	-	300	8.4	2.4
200	**12.3**	**2.0**	6.75	"	"	1000	-	240	10.2	2.5
164	**14.6**	**1.7**	8.25	"	"	1100	-	197	12.2	2.0
127	**18.4**	**1.35**	10.67	"	"	1250	-	152	15.4	1.6
100	**22**	**1.15**	13.50	"	"	1250	-	120	18.6	1.35
75	**28**	**0.89**	18.00	"	"	1250	-	90	23.5	1.05
100	**22**	**2.5**	13.50	**BS03-../D07LA4**	9.4	1600	-	120	18.6	3.0
72	**30**	**1.85**	19.00	"	"	1950	-	86	25	2.2
54	**36.5**	**1.5**	25.00	"	"	1950	-	65	30	1.85
41	**42.5**	**1.3**	33.00	"	"	1950	-	49.5	35	1.55
35	**52**	**1.05**	39.00	"	"	1950	-	42	43.5	1.25
27	**61**	**0.9**	50.00	"	"	1950	-	32.5	51	1.1
225	**9.9**	**2.6**	6.13	**BS04-../D07LA4**	9.8	1320	-	265	8.4	3.1
152	**14.7**	**2.0**	8.93	"	"	1500	-	182	12.2	2.5
126	**17.7**	**1.8**	10.73	"	"	1600	-	151	14.7	2.2
104	**21**	**1.55**	13.09	"	"	1760	-	124	17.7	1.85
83	**26.5**	**1.3**	16.31	"	"	1970	-	100	22	1.6
65	**33**	**1.1**	20.96	"	"	2100	-	78	27.5	1.35
56	**38.5**	**0.88**	24.25	"	"	2250	-	67	32	1.05
52	**39**	**0.97**	26.21	"	"	2250	-	62	32.5	1.15
43	**46.5**	**0.82**	31.50	"	"	2250	-	52	38.5	0.99
96	**24**	**2.8**	14.07	**BS06-../D07LA4**	14	2200	-	116	20	3.4
82	**27.5**	**2.6**	16.56	"	"	2400	-	98	23	3.1
69	**33**	**2.3**	19.82	"	"	2500	-	82	27.5	2.7
56	**40.5**	**1.9**	24.25	"	"	2600	-	67	34	2.3
52	**40**	**1.95**	26.21	"	"	3000	-	62	33.5	2.3
43	**48.5**	**1.65**	31.50	"	"	3200	-	52	40	2.0
33	**62**	**1.4**	41.29	"	"	3500	-	39.5	52	1.65
28	**73**	**1.2**	48.60	"	"	3500	-	33.5	61	1.45
23.5	**86**	**1.05**	58.15	"	"	3500	-	28	72	1.25
21.5	**90**	**0.89**	64.06	"	"	3500	-	25.5	76	1.05
19	**107**	**0.88**	71.18	"	"	3500	-	23	88	1.05
18	**106**	**0.8**	77.00	"	"	3500	-	21.5	89	0.96

P = 0.3 kW

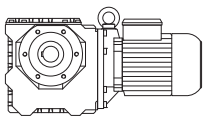

50 Hz			i	Type	m	F_{RN}	F_{RV}	60 Hz		
n_2	M_2	f_B						n_2	M_2	f_B
1/min	Nm				kg	N	N	1/min	Nm	
52	**42.5**	**3.1**	26.42	**BS10-../D07LA4**	26	3250	-	62	36	3.6
40.5	**53**	**2.5**	33.55	"	"	3550	-	48.5	44.5	3.0
34	**63**	**2.2**	39.96	"	"	3800	-	41	52	2.7
28.5	**75**	**1.95**	47.59	"	"	4050	-	34.5	62	2.3
24	**88**	**1.7**	57.12	"	"	4350	-	28.5	74	2.0
22.5	**85**	**1.75**	60.74	"	"	4550	-	27	71	2.1
19	**111**	**1.45**	71.96	"	"	5000	-	23	92	1.75
16.5	**128**	**1.15**	84.36	"	"	5300	-	19.5	108	1.4
13.5	**135**	**1.2**	103.4	"	"	5600	-	16	114	1.4
10.5	**174**	**0.94**	130.3	"	"	6000	-	12.5	146	1.1
8.9	**205**	**0.8**	152.7	"	"	6000	-	11	166	0.99
23	**93**	**3.0**	58.74	**BS20-../D07LA4**	36	5900	-	28	76	3.7
19.5	**110**	**2.7**	70.30	"	"	6300	-	23.5	91	3.3
18	**105**	**2.6**	76.18	"	"	6600	-	21.5	87	3.1
15.5	**121**	**2.2**	88.67	"	"	7000	-	18.5	102	2.6
13	**145**	**1.85**	106.3	"	"	7600	-	15.5	121	2.2
11	**171**	**1.6**	127.3	"	"	8000	-	13	145	1.85
8.5	**220**	**1.25**	159.4	"	"	8000	-	10.5	180	1.55
7.4	**255**	**1.1**	183.0	"	"	8000	-	8.9	210	1.35
6.0	**305**	**0.95**	225.6	"	"	8000	-	7.2	250	1.15
5.3	**345**	**0.86**	257.8	**BS20Z-../D07LA4**	38	8000	-	6.3	290	1.0
16.5	**133**	**3.1**	83.48	**BS30-../D07LA4**	54	6800	-	19.5	113	3.6
11	**177**	**2.9**	125.2	"	"	8700	-	13	149	3.5
9.0	**210**	**2.6**	151.1	"	"	9500	-	11	174	3.1
7.3	**255**	**2.1**	186.7	"	"	10000	-	8.7	215	2.5
6.3	**300**	**1.75**	216.4	"	"	10000	-	7.5	250	2.1
5.2	**360**	**1.55**	261.6	**BS30Z-../D07LA4**	56	10000	-	6.2	300	1.85
4.5	**410**	**1.4**	306.6	"	"	10000	-	5.3	350	1.65
3.5	**530**	**1.1**	390.2	"	"	10000	-	4.2	440	1.35
3.0	**610**	**0.98**	457.3	"	"	10000	-	3.6	500	1.2
2.6	**700**	**0.86**	539.3	"	"	10000	-	3.1	590	1.0
6.9	**305**	**2.3**	197.1	**BS40Z-../D07LA4**	70	15000	-	8.3	255	2.7
5.5	**325**	**2.8**	249.6	"	"	15000	-	6.5	275	3.3
4.7	**450**	**1.6**	287.7	"	"	15000	-	5.7	370	1.95
4.5	**400**	**2.7**	302.1	"	"	15000	-	5.4	330	3.2
3.8	**470**	**2.3**	356.8	"	"	15000	-	4.6	390	2.8
3.1	**580**	**1.7**	446.8	"	"	15000	-	3.7	485	2.0
2.6	**690**	**1.6**	520.8	"	"	15000	-	3.2	560	1.95
2.3	**750**	**1.2**	612.1	"	"	15000	-	2.7	640	1.4
1.9	**900**	**0.84**	736.5	"	"	15000	-	2.2	780	0.97

P = 0.37 kW

50 Hz			i	Type	m	F_{RN}	F_{RV}	60 Hz		
n_2	M_2	f_B						n_2	M_2	f_B
1/min	Nm				kg	N	N	1/min	Nm	
295	**10.5**	**1.45**	4.60	**BS02-../D07LA4**	9.3	1000	-	355	8.7	1.7
250	**12.4**	**1.6**	5.40	"	"	1000	-	300	10.3	1.95
200	**15.1**	**1.65**	6.75	"	"	1000	-	240	12.6	2.0
164	**18**	**1.4**	8.25	"	"	1100	-	197	15	1.65
127	**22.5**	**1.1**	10.67	"	"	1250	-	152	19	1.3
100	**27.5**	**0.91**	13.50	"	"	1250	-	120	22.5	1.1
100	**27.5**	**2.0**	13.50	**BS03-../D07LA4**	9.4	1600	-	120	22.5	2.4
72	**37**	**1.5**	19.00	"	"	1950	-	86	31	1.75
54	**45**	**1.2**	25.00	"	"	1950	-	65	37.5	1.45
41	**52**	**1.05**	33.00	"	"	1950	-	49.5	43.5	1.25
35	**64**	**0.86**	39.00	"	"	1950	-	42	53	1.05
225	**12.2**	**2.1**	6.13	**BS04-../D07LA4**	9.8	1320	-	265	10.4	2.5
152	**18.1**	**1.65**	8.93	"	"	1500	-	182	15.1	2.0
126	**21.5**	**1.5**	10.73	"	"	1600	-	151	18.2	1.75

P = 0.37 kW

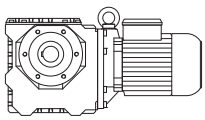

50 Hz			i	Type	m	F_{RN}	F_{RV}	60 Hz		
n_2	M_2	f_B						n_2	M_2	f_B
1/min	Nm				kg	N	N	1/min	Nm	
104	**26**	**1.25**	13.09	**BS04-../D07LA4**	"	1760	-	124	21.5	1.55
83	**32.5**	**1.1**	16.31	"	"	1970	-	100	27	1.3
65	**41**	**0.9**	20.96	"	"	2100	-	78	34	1.1
152	**18.8**	**3.3**	8.93	**BS06-../D07LA4**	14	1710	-	182	15.7	3.9
126	**22.5**	**2.9**	10.73	"	"	1850	-	151	18.9	3.4
96	**29.5**	**2.3**	14.07	"	"	2200	-	116	24.5	2.8
82	**34**	**2.1**	16.56	"	"	2400	-	98	28.5	2.5
69	**40.5**	**1.85**	19.82	"	"	2500	-	82	34	2.2
56	**50**	**1.55**	24.25	"	"	2600	-	67	42	1.85
52	**49.5**	**1.55**	26.21	"	"	3000	-	62	41.5	1.85
43	**59**	**1.35**	31.50	"	"	3200	-	52	49.5	1.6
33	**77**	**1.1**	41.29	"	"	3500	-	39.5	64	1.35
28	**90**	**0.98**	48.60	"	"	3500	-	33.5	75	1.15
23.5	**106**	**0.86**	58.15	"	"	3500	-	28	89	1.0
63	**44.5**	**2.8**	21.61	**BS10-../D07LA4**	26	3000	-	75	37.5	3.3
52	**53**	**2.5**	26.42	"	"	3250	-	62	44	3.0
40.5	**66**	**2.0**	33.55	"	"	3550	-	48.5	55	2.5
34	**77**	**1.8**	39.96	"	"	3800	-	41	64	2.2
28.5	**92**	**1.6**	47.59	"	"	4050	-	34.5	76	1.9
24	**108**	**1.4**	57.12	"	"	4350	-	28.5	91	1.65
22.5	**105**	**1.45**	60.74	"	"	4550	-	27	87	1.7
19	**137**	**1.15**	71.96	"	"	5000	-	23	113	1.4
16.5	**158**	**0.95**	84.36	"	"	5300	-	19.5	134	1.1
13.5	**167**	**0.96**	103.4	"	"	5600	-	16	141	1.15
32.5	**82**	**3.3**	42.08	**BS20-../D07LA4**	36	5200	-	38.5	69	3.9
28	**94**	**2.9**	48.98	"	"	5500	-	33.5	79	3.4
27	**87**	**3.1**	50.44	"	"	5700	-	32.5	72	3.8
23	**115**	**2.4**	58.74	"	"	5900	-	28	94	3.0
19.5	**135**	**2.2**	70.30	"	"	6300	-	23.5	112	2.7
18	**129**	**2.1**	76.18	"	"	6600	-	21.5	108	2.5
15.5	**150**	**1.8**	88.67	"	"	7000	-	18.5	126	2.1
13	**179**	**1.5**	106.3	"	"	7600	-	15.5	150	1.8
11	**210**	**1.3**	127.3	"	"	8000	-	13	179	1.5
8.5	**270**	**1.0**	159.4	"	"	8000	-	10.5	220	1.25
7.4	**315**	**0.89**	183.0	"	"	8000	-	8.9	260	1.1
6.8	**330**	**0.85**	201.4	**BS20Z-../D07LA4**	38	8000	-	8.1	275	1.0
16.5	**164**	**2.5**	83.48	**BS30-../D07LA4**	54	6800	-	19.5	139	2.9
15	**162**	**3.0**	90.59	"	"	7700	-	18	135	3.6
13	**184**	**2.8**	106.2	"	"	8200	-	15.5	155	3.3
11	**215**	**2.4**	125.2	"	"	8700	-	13	184	2.8
9.0	**260**	**2.1**	151.1	"	"	9500	-	11	215	2.5
7.3	**315**	**1.7**	186.7	"	"	10000	-	8.7	265	2.0
6.3	**370**	**1.4**	216.4	"	"	10000	-	7.5	310	1.7
5.2	**445**	**1.25**	261.6	**BS30Z-../D07LA4**	56	10000	-	6.2	375	1.5
4.5	**510**	**1.15**	306.6	"	"	10000	-	5.3	430	1.35
3.5	**650**	**0.91**	390.2	"	"	10000	-	4.2	540	1.1
3.0	**750**	**0.8**	457.3	"	"	10000	-	3.6	620	0.97
6.9	**375**	**1.85**	197.1	**BS40Z-../D07LA4**	70	15000	-	8.3	315	2.2
5.5	**400**	**2.3**	249.6	"	"	15000	-	6.5	340	2.6
4.7	**550**	**1.3**	287.7	"	"	15000	-	5.7	455	1.55
4.5	**490**	**2.2**	302.1	"	"	15000	-	5.4	410	2.6
3.8	**580**	**1.85**	356.8	"	"	15000	-	4.6	480	2.3
3.1	**710**	**1.4**	446.8	"	"	15000	-	3.7	600	1.65
2.6	**850**	**1.3**	520.8	"	"	15000	-	3.2	690	1.6
2.3	**930**	**0.98**	612.1	"	"	15000	-	2.7	790	1.15

P = 0.55 kW

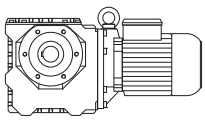

50 Hz			i	Type	m	F_{RN}	F_{RV}	60 Hz		
n_2	M_2	f_B						n_2	M_2	f_B
1/min	Nm				kg	N	N	1/min	Nm	
305	**15.1**	**2.6**	4.60	**BS03-../D08MA4**	10	1070	-	370	12.4	3.2
235	**19.6**	**2.2**	6.00	"	"	1170	-	280	16.5	2.7
175	**25.5**	**1.9**	8.00	"	"	1320	-	210	21.5	2.2
140	**31.5**	**1.65**	10.00	"	"	1450	-	168	26	2.0
104	**39**	**1.4**	13.50	"	"	1600	-	125	32.5	1.7
74	**53**	**1.05**	19.00	"	"	1950	-	89	44.5	1.25
56	**64**	**0.86**	25.00	"	"	1950	-	68	53	1.05
210	**20**	**2.8**	6.67	**BS06-../D08MA4**	16	1550	-	255	16.6	3.4
157	**27**	**2.3**	8.93	"	"	1710	-	189	22.5	2.8
131	**32**	**2.0**	10.73	"	"	1850	-	157	27	2.4
100	**42.5**	**1.6**	14.07	"	"	2200	-	120	35	1.95
85	**49**	**1.45**	16.56	"	"	2400	-	102	41	1.75
71	**59**	**1.25**	19.82	"	"	2500	-	85	49	1.55
58	**72**	**1.05**	24.25	"	"	2600	-	70	60	1.3
54	**71**	**1.1**	26.21	"	"	3000	-	65	58	1.35
44.5	**86**	**0.93**	31.50	"	"	3200	-	54	71	1.15
113	**37**	**2.9**	12.49	**BS10-../D08MA4**	27	2400	-	135	31	3.5
83	**50**	**2.4**	16.92	"	"	2700	-	100	42	2.9
65	**64**	**1.95**	21.61	"	"	3000	-	78	53	2.4
53	**77**	**1.7**	26.42	"	"	3250	-	64	64	2.0
46	**78**	**1.65**	30.63	"	"	3550	-	55	65	2.0
42	**95**	**1.4**	33.55	"	"	3550	-	51	78	1.75
35.5	**110**	**1.25**	39.96	"	"	3800	-	42.5	92	1.5
29.5	**133**	**1.1**	47.59	"	"	4050	-	35.5	110	1.3
25	**155**	**0.97**	57.12	"	"	4350	-	29.5	131	1.15
23.5	**149**	**1.0**	60.74	"	"	4550	-	28	125	1.2
19.5	**199**	**0.8**	71.96	"	"	5000	-	23.5	165	0.97
51	**80**	**3.1**	27.86	**BS20-../D08MA4**	37	4450	-	61	67	3.7
46	**82**	**3.0**	30.63	"	"	4750	-	55	68	3.7
43	**94**	**2.9**	32.87	"	"	4750	-	52	77	3.5
35	**108**	**2.4**	40.25	"	"	5300	-	42	90	2.9
33.5	**119**	**2.3**	42.08	"	"	5200	-	40	99	2.7
29	**135**	**2.0**	48.98	"	"	5500	-	34.5	114	2.4
28	**125**	**2.2**	50.44	"	"	5700	-	33.5	105	2.6
24	**164**	**1.7**	58.74	"	"	5900	-	29	135	2.1
20	**196**	**1.55**	70.30	"	"	6300	-	24	164	1.85
18.5	**187**	**1.45**	76.18	"	"	6600	-	22.5	154	1.75
16	**215**	**1.25**	88.67	"	"	7000	-	19	182	1.5
13.5	**255**	**1.05**	106.3	"	"	7600	-	16	215	1.25
11	**315**	**0.86**	127.3	"	"	8000	-	13.5	255	1.05
28	**144**	**3.1**	50.04	**BS30-../D08MA4**	55	5900	-	34	118	3.8
24	**168**	**2.7**	58.64	"	"	6900	-	29	139	3.3
20	**183**	**2.6**	71.17	"	"	7000	-	24	153	3.1
17	**235**	**1.75**	83.48	"	"	6800	-	20.5	197	2.1
15.5	**230**	**2.1**	90.59	"	"	7700	-	19	190	2.6
13.5	**260**	**1.95**	106.2	"	"	8200	-	16	220	2.3
11.5	**310**	**1.7**	125.2	"	"	8700	-	13.5	260	2.0
9.3	**375**	**1.45**	151.1	"	"	9500	-	11.5	305	1.75
7.5	**460**	**1.2**	186.7	"	"	10000	-	9.0	385	1.4
6.5	**530**	**0.98**	216.4	"	"	10000	-	7.8	440	1.2
5.4	**640**	**0.88**	261.6	**BS30Z-../D08MA4**	58	10000	-	6.5	530	1.05
11.5	**305**	**3.2**	126.0	**BS40-../D08MA4**	68	14900	-	13.5	260	3.8
9.5	**355**	**2.7**	148.1	"	"	15000	-	11.5	295	3.3
7.9	**430**	**1.9**	178.2	"	"	15000	-	9.5	355	2.3
6.4	**510**	**1.55**	219.7	"	"	15000	-	7.7	425	1.85
5.7	**580**	**1.55**	249.6	**BS40Z-../D08MA4**	71	15000	-	6.8	485	1.85
4.9	**790**	**0.91**	287.7	"	"	15000	-	5.9	650	1.1
4.7	**700**	**1.55**	302.1	"	"	15000	-	5.6	590	1.8
4.0	**820**	**1.3**	356.8	"	"	15000	-	4.8	680	1.6
3.2	**1030**	**0.96**	446.8	"	"	15000	-	3.8	870	1.15
2.7	**1220**	**0.9**	520.8	"	"	15000	-	3.3	1000	1.1

P = 0.75 kW

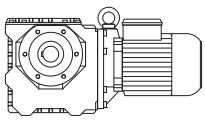

50 Hz			i	Type	m	F_{RN}	F_{RV}	60 Hz		
n_2	M_2	f_B						n_2	M_2	f_B
1/min	Nm				kg	N	N	1/min	Nm	
305	**20.5**	**1.95**	4.60	**BS03-../DSE08LA4**	12	1070	-	370	17	2.4
235	**26.5**	**1.65**	6.00	"	"	1170	-	280	22.5	1.95
175	**35**	**1.35**	8.00	"	"	1320	-	210	29	1.65
140	**42.5**	**1.2**	10.00	"	"	1450	-	168	35.5	1.45
104	**53**	**1.05**	13.50	"	"	1600	-	125	44.5	1.25
210	**27.5**	**2.0**	6.67	**BS06-../DSE08LA4**	17	1550	-	255	22.5	2.5
157	**36.5**	**1.7**	8.93	"	"	1710	-	189	30.5	2.0
131	**44**	**1.5**	10.73	"	"	1850	-	157	36.5	1.8
100	**58**	**1.15**	14.07	"	"	2200	-	120	48	1.4
85	**67**	**1.05**	16.56	"	"	2400	-	102	56	1.3
71	**80**	**0.94**	19.82	"	"	2500	-	85	67	1.1
54	**96**	**0.8**	26.21	"	"	3000	-	65	80	0.96
113	**50**	**2.2**	12.49	**BS10-../DSE08LA4**	28	2400	-	135	42	2.6
83	**69**	**1.75**	16.92	"	"	2700	-	100	57	2.1
65	**88**	**1.4**	21.61	"	"	3000	-	78	73	1.7
53	**105**	**1.25**	26.42	"	"	3250	-	64	87	1.5
46	**107**	**1.2**	30.63	"	"	3550	-	55	89	1.45
42	**129**	**1.05**	33.55	"	"	3550	-	51	106	1.25
35.5	**151**	**0.93**	39.96	"	"	3800	-	42.5	126	1.1
29.5	**182**	**0.8**	47.59	"	"	4050	-	35.5	151	0.96
83	**69**	**3.2**	16.92	**BS20-../DSE08LA4**	39	3700	-	100	58	3.8
63	**92**	**2.5**	22.23	"	"	4100	-	76	76	3.0
51	**109**	**2.3**	27.86	"	"	4450	-	61	91	2.7
46	**112**	**2.2**	30.63	"	"	4750	-	55	93	2.7
43	**128**	**2.1**	32.87	"	"	4750	-	52	106	2.5
35	**147**	**1.75**	40.25	"	"	5300	-	42	122	2.1
33.5	**162**	**1.65**	42.08	"	"	5200	-	40	136	2.0
29	**185**	**1.45**	48.98	"	"	5500	-	34.5	155	1.75
28	**171**	**1.6**	50.44	"	"	5700	-	33.5	143	1.9
24	**220**	**1.25**	58.74	"	"	5900	-	29	185	1.5
20	**265**	**1.15**	70.30	"	"	6300	-	24	220	1.35
18.5	**255**	**1.05**	76.18	"	"	6600	-	22.5	210	1.3
16	**295**	**0.92**	88.67	"	"	7000	-	19	245	1.1
42	**139**	**3.0**	33.55	**BS30-../DSE08LA4**	56	5200	-	51	115	3.7
37	**145**	**2.9**	37.92	"	"	5500	-	44.5	120	3.5
36	**161**	**2.7**	39.31	"	"	5500	-	43	134	3.2
28	**196**	**2.3**	50.04	"	"	5900	-	34	162	2.8
24	**225**	**2.0**	58.64	"	"	6900	-	29	190	2.4
20	**250**	**1.9**	71.17	"	"	7000	-	24	205	2.3
17	**320**	**1.3**	83.48	"	"	6800	-	20.5	265	1.55
15.5	**315**	**1.55**	90.59	"	"	7700	-	19	260	1.9
13.5	**360**	**1.4**	106.2	"	"	8200	-	16	300	1.7
11.5	**420**	**1.25**	125.2	"	"	8700	-	13.5	360	1.45
9.3	**510**	**1.05**	151.1	"	"	9500	-	11.5	415	1.3
7.5	**630**	**0.86**	186.7	"	"	10000	-	9.0	520	1.05
20.5	**265**	**2.8**	69.60	**BS40-../DSE08LA4**	69	11800	-	24.5	225	3.3
16.5	**295**	**3.1**	86.33	"	"	12900	-	19.5	250	3.6
13	**365**	**2.6**	108.1	"	"	14000	-	16	295	3.2
11.5	**415**	**2.4**	126.0	"	"	14900	-	13.5	355	2.8
9.5	**490**	**2.0**	148.1	"	"	15000	-	11.5	400	2.4
7.9	**580**	**1.4**	178.2	"	"	15000	-	9.5	490	1.65
6.4	**700**	**1.15**	219.7	"	"	15000	-	7.7	580	1.35
5.7	**790**	**1.15**	249.6	**BS40Z-../DSE08LA4**	73	15000	-	6.8	660	1.35
4.7	**960**	**1.1**	302.1	"	"	15000	-	5.6	800	1.35
4.0	**1120**	**0.96**	356.8	"	"	15000	-	4.8	940	1.15

P = 1.1 kW

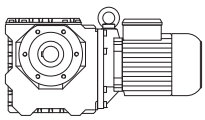

50 Hz			i	Type	m	F_{RN}	F_{RV}	60 Hz		
n_2	M_2	f_B						n_2	M_2	f_B
1/min	Nm				kg	N	N	1/min	Nm	
305	**30**	**1.35**	4.60	**BS03-../DSE08XA4**	13	1070	-	370	24.5	1.65
235	**39**	**1.15**	6.00	"	"	1170	-	280	33	1.35
175	**51**	**0.94**	8.00	"	"	1320	-	210	43	1.1
140	**63**	**0.83**	10.00	"	"	1450	-	168	52	1.0
210	**40.5**	**1.4**	6.67	**BS06-../DSE08XA4**	18	1550	-	255	33	1.7
157	**54**	**1.15**	8.93	"	"	1710	-	189	45	1.4
131	**64**	**1.0**	10.73	"	"	1850	-	157	54	1.2
100	**85**	**0.8**	14.07	"	"	2200	-	120	70	0.97
113	**74**	**1.45**	12.49	**BS10-../DSE08XA4**	30	2400	-	135	62	1.75
83	**101**	**1.2**	16.92	"	"	2700	-	100	84	1.45
65	**129**	**0.97**	21.61	"	"	3000	-	78	107	1.15
53	**154**	**0.84**	26.42	"	"	3250	-	64	128	1.0
46	**157**	**0.83**	30.63	"	"	3550	-	55	131	0.99
110	**77**	**2.6**	12.77	**BS20-../DSE08XA4**	40	3350	-	132	64	3.1
83	**102**	**2.2**	16.92	"	"	3700	-	100	85	2.6
63	**135**	**1.7**	22.23	"	"	4100	-	76	111	2.1
51	**160**	**1.55**	27.86	"	"	4450	-	61	134	1.85
46	**164**	**1.5**	30.63	"	"	4750	-	55	137	1.8
43	**188**	**1.45**	32.87	"	"	4750	-	52	155	1.75
35	**215**	**1.2**	40.25	"	"	5300	-	42	180	1.45
33.5	**235**	**1.15**	42.08	"	"	5200	-	40	199	1.35
29	**270**	**1.0**	48.98	"	"	5500	-	34.5	225	1.2
28	**250**	**1.1**	50.44	"	"	5700	-	33.5	210	1.3
24	**325**	**0.86**	58.74	"	"	5900	-	29	270	1.05
67	**130**	**2.9**	20.94	**BS30-../DSE08XA4**	57	4300	-	81	107	3.6
52	**167**	**2.4**	27.07	"	"	4750	-	63	138	2.9
46	**171**	**2.3**	30.63	"	"	5000	-	55	143	2.8
42	**205**	**2.0**	33.55	"	"	5200	-	51	168	2.5
37	**210**	**2.0**	37.92	"	"	5500	-	44.5	177	2.4
36	**235**	**1.85**	39.31	"	"	5500	-	43	197	2.2
28	**285**	**1.6**	50.04	"	"	5900	-	34	235	1.9
24	**335**	**1.35**	58.64	"	"	6900	-	29	275	1.65
20	**365**	**1.3**	71.17	"	"	7000	-	24	305	1.55
17	**475**	**0.86**	83.48	"	"	6800	-	20.5	390	1.05
15.5	**465**	**1.05**	90.59	"	"	7700	-	19	380	1.3
13.5	**520**	**0.98**	106.2	"	"	8200	-	16	445	1.15
11.5	**620**	**0.84**	125.2	"	"	8700	-	13.5	520	1.0
29.5	**275**	**3.0**	47.69	**BS40-../DSE08XA4**	70	9600	-	35.5	230	3.6
23.5	**315**	**2.7**	60.38	"	"	11200	-	28	265	3.2
20.5	**390**	**1.9**	69.60	"	"	11800	-	24.5	330	2.3
19.5	**375**	**2.3**	73.09	"	"	12100	-	23	315	2.8
16.5	**435**	**2.1**	86.33	"	"	12900	-	19.5	370	2.4
13	**540**	**1.75**	108.1	"	"	14000	-	16	435	2.2
11.5	**610**	**1.6**	126.0	"	"	14900	-	13.5	520	1.9
9.5	**710**	**1.35**	148.1	"	"	15000	-	11.5	590	1.65
7.9	**860**	**0.95**	178.2	"	"	15000	-	9.5	710	1.15

P = 1.5 kW

50 Hz			i	Type	m	F_{RN}	F_{RV}	60 Hz		
n_2	M_2	f_B						n_2	M_2	f_B
1/min	Nm				kg	N	N	1/min	Nm	
114	**100**	**1.1**	12.49	**BS10-../DSE09LA4**	36	2400	-	137	83	1.3
84	**136**	**0.88**	16.92	"	"	2700	-	102	112	1.05
112	**103**	**1.95**	12.77	**BS20-../DSE09LA4**	46	3350	-	134	86	2.3
84	**138**	**1.6**	16.92	"	"	3700	-	102	113	1.95
64	**181**	**1.25**	22.23	"	"	4100	-	77	150	1.55
51	**215**	**1.15**	27.86	"	"	4450	-	62	180	1.4
46.5	**220**	**1.15**	30.63	"	"	4750	-	56	184	1.35
43.5	**250**	**1.1**	32.87	"	"	4750	-	53	205	1.3

P = 1.5 kW

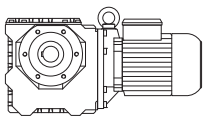

50 Hz			i	Type	m	F_{RN}	F_{RV}	60 Hz		
n_2	M_2	f_B						n_2	M_2	f_B
1/min	Nm				kg	N	N	1/min	Nm	
35.5	**290**	**0.9**	40.25	**BS20-../DSE09LA4**	"	5300	-	42.5	240	1.1
34	**320**	**0.84**	42.08	"	"	5200	-	41	265	1.0
28.5	**335**	**0.81**	50.44	"	"	5700	-	34	280	0.96
107	**111**	**3.0**	13.29	**BS30-../DSE09LA4**	64	3600	-	129	92	3.6
84	**141**	**2.6**	16.92	"	"	3950	-	102	116	3.1
68	**174**	**2.2**	20.94	"	"	4300	-	82	144	2.6
53	**220**	**1.8**	27.07	"	"	4750	-	64	185	2.2
46.5	**230**	**1.75**	30.63	"	"	5000	-	56	191	2.1
42.5	**275**	**1.55**	33.55	"	"	5200	-	51	230	1.85
37.5	**285**	**1.45**	37.92	"	"	5500	-	45.5	235	1.8
36.5	**315**	**1.35**	39.31	"	"	5500	-	44	260	1.65
28.5	**385**	**1.15**	50.04	"	"	5900	-	34.5	315	1.45
24.5	**450**	**1.0**	58.64	"	"	6900	-	29.5	370	1.25
20	**500**	**0.96**	71.17	"	"	7000	-	24.5	405	1.2
16	**610**	**0.8**	90.59	"	"	7700	-	19	520	0.94
46.5	**225**	**3.3**	30.63	**BS40-../DSE09LA4**	77	8700	-	56	189	4.0
43	**265**	**2.9**	33.35	"	"	8300	-	52	220	3.5
37.5	**275**	**2.8**	38.13	"	"	9400	-	45	230	3.4
35.5	**315**	**2.5**	40.37	"	"	9000	-	42.5	265	3.0
30	**370**	**2.2**	47.69	"	"	9600	-	36	310	2.7
24	**420**	**2.0**	60.38	"	"	11200	-	28.5	355	2.4
20.5	**530**	**1.4**	69.60	"	"	11800	-	25	440	1.7
19.5	**510**	**1.75**	73.09	"	"	12100	-	23.5	425	2.1
16.5	**590**	**1.55**	86.33	"	"	12900	-	20	490	1.85
13.5	**710**	**1.35**	108.1	"	"	14000	-	16	590	1.6
11.5	**830**	**1.2**	126.0	"	"	14900	-	14	680	1.45
9.6	**960**	**1.0**	148.1	"	"	15000	-	12	770	1.25

P = 2.2 kW

50 Hz			i	Type	m	F_{RN}	F_{RV}	60 Hz		
n_2	M_2	f_B						n_2	M_2	f_B
1/min	Nm				kg	N	N	1/min	Nm	
112	**151**	**1.3**	12.77	**BS20-../DSE09XA4**	50	3350	-	134	127	1.55
84	**200**	**1.1**	16.92	"	"	3700	-	102	166	1.35
64	**265**	**0.87**	22.23	"	"	4100	-	77	220	1.05
107	**162**	**2.0**	13.29	**BS30-../DSE09XA4**	68	3600	-	129	135	2.5
84	**205**	**1.75**	16.92	"	"	3950	-	102	170	2.1
68	**255**	**1.5**	20.94	"	"	4300	-	82	210	1.8
53	**325**	**1.25**	27.07	"	"	4750	-	64	270	1.5
46.5	**335**	**1.2**	30.63	"	"	5000	-	56	280	1.45
42.5	**405**	**1.05**	33.55	"	"	5200	-	51	335	1.25
37.5	**420**	**1.0**	37.92	"	"	5500	-	45.5	345	1.2
36.5	**465**	**0.92**	39.31	"	"	5500	-	44	385	1.1
28.5	**560**	**0.8**	50.04	"	"	5900	-	34.5	465	0.97
84	**210**	**3.2**	16.92	**BS40-../DSE09XA4**	81	6400	-	102	175	3.8
68	**250**	**2.8**	21.06	"	"	6900	-	82	210	3.4
55	**310**	**2.4**	26.18	"	"	7500	-	66	260	2.8
46.5	**330**	**2.3**	30.63	"	"	8700	-	56	275	2.7
43	**390**	**2.0**	33.35	"	"	8300	-	52	320	2.4
37.5	**405**	**1.95**	38.13	"	"	9400	-	45	340	2.3
35.5	**465**	**1.7**	40.37	"	"	9000	-	42.5	390	2.1
30	**540**	**1.55**	47.69	"	"	9600	-	36	455	1.8
24	**620**	**1.4**	60.38	"	"	11200	-	28.5	520	1.65
20.5	**780**	**0.95**	69.60	"	"	11800	-	25	640	1.15
19.5	**750**	**1.15**	73.09	"	"	12100	-	23.5	620	1.4
16.5	**870**	**1.05**	86.33	"	"	12900	-	20	720	1.25
13.5	**1040**	**0.91**	108.1	"	"	14000	-	16	870	1.1
11.5	**1220**	**0.8**	126.0	"	"	14900	-	14	1000	0.98

P = 3 kW

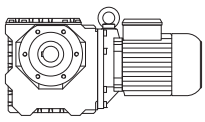

50 Hz			i	Type	m	F_{RN}	F_{RV}	60 Hz		
n_2	M_2	f_B						n_2	M_2	f_B
1/min	Nm				kg	N	N	1/min	Nm	
107	**220**	**1.5**	13.29	**BS30-../DSE11SA4**	71	3600	-	129	184	1.8
84	**280**	**1.3**	16.92	"	"	3950	-	102	230	1.55
68	**345**	**1.1**	20.94	"	"	4300	-	82	285	1.35
53	**445**	**0.9**	27.07	"	"	4750	-	64	370	1.1
46.5	**460**	**0.87**	30.63	"	"	5000	-	56	380	1.05
109	**220**	**2.8**	13.03	**BS40-../DSE11SA4**	89	5800	-	132	184	3.3
84	**285**	**2.4**	16.92	"	"	6400	-	102	235	2.9
68	**345**	**2.1**	21.06	"	"	6900	-	82	285	2.5
55	**425**	**1.75**	26.18	"	"	7500	-	66	355	2.1
46.5	**455**	**1.65**	30.63	"	"	8700	-	56	375	2.0
43	**530**	**1.45**	33.35	"	"	8300	-	52	440	1.75
37.5	**550**	**1.4**	38.13	"	"	9400	-	45	460	1.7
35.5	**630**	**1.25**	40.37	"	"	9000	-	42.5	530	1.5
30	**740**	**1.1**	47.69	"	"	9600	-	36	620	1.35
24	**840**	**1.0**	60.38	"	"	11200	-	28.5	710	1.2
19.5	**1020**	**0.86**	73.09	"	"	12100	-	23.5	850	1.05

P = 4 kW

50 Hz			i	Type	m	F_{RN}	F_{RV}	60 Hz		
n_2	M_2	f_B						n_2	M_2	f_B
1/min	Nm				kg	N	N	1/min	Nm	
107	**295**	**1.15**	13.29	**BS30-../DSE11MA4**	77	3600	-	129	245	1.35
84	**375**	**0.96**	16.92	"	"	3950	-	102	310	1.15
68	**465**	**0.82**	20.94	"	"	4300	-	82	385	0.99
109	**295**	**2.1**	13.03	**BS40-../DSE11MA4**	95	5800	-	132	245	2.5
84	**385**	**1.75**	16.92	"	"	6400	-	102	315	2.1
68	**460**	**1.55**	21.06	"	"	6900	-	82	380	1.85
55	**560**	**1.3**	26.18	"	"	7500	-	66	470	1.55
46.5	**600**	**1.25**	30.63	"	"	8700	-	56	500	1.5
43	**710**	**1.1**	33.35	"	"	8300	-	52	580	1.35
37.5	**740**	**1.05**	38.13	"	"	9400	-	45	610	1.3
35.5	**850**	**0.94**	40.37	"	"	9000	-	42.5	710	1.15
30	**990**	**0.84**	47.69	"	"	9600	-	36	820	1.0

P = 5.5 kW

50 Hz			i	Type	m	F_{RN}	F_{RV}	60 Hz		
n_2	M_2	f_B						n_2	M_2	f_B
1/min	Nm				kg	N	N	1/min	Nm	
107	**405**	**0.82**	13.29	**BS30-../DSE11LA4**	89	3600	-	129	335	0.99
109	**405**	**1.5**	13.03	**BS40-../DSE11LA4**	107	5800	-	132	335	1.85
84	**530**	**1.25**	16.92	"	"	6400	-	102	435	1.55
68	**630**	**1.15**	21.06	"	"	6900	-	82	520	1.35
55	**780**	**0.95**	26.18	"	"	7500	-	66	650	1.15
46.5	**830**	**0.9**	30.63	"	"	8700	-	56	690	1.1
43	**970**	**0.8**	33.35	"	"	8300	-	52	800	0.98

BS-series worm-geared motors

Selection - worm-geared motors DHE - IE2

P = 0.03 kW

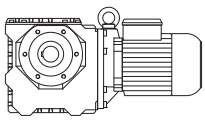

50 Hz			i	Type	m	F_{RN}	F_{RV}	60 Hz		
n_2	M_2	f_B						n_2	M_2	f_B
1/min	Nm				kg	N	N	1/min	Nm	
75	**2.8**	**8.9**	18.00	**BS02-../D04LA4**	3.5	1250	-	90	2.35	11
62	**3.2**	**7.8**	22.00	"	"	1250	-	74	2.7	9.3
50	**3.6**	**6.9**	27.00	"	"	1250	-	60	3.0	8.3
41	**4.15**	**6.0**	33.00	"	"	1250	-	49.5	3.45	7.2
31.5	**5.6**	**4.3**	43.00	"	"	1250	-	38	4.65	5.2
25	**6.5**	**3.4**	54.00	"	"	1250	-	30	5.4	4.1
19.5	**7.4**	**2.7**	70.00	"	"	1250	-	23.5	6.2	3.2
14.5	**11.6**	**3.3**	93.92	**BS04-../D04LA4**	3.9	2250	-	17.5	9.6	4.0
13.5	**13.5**	**2.8**	102.9	"	"	2250	-	16	11.4	3.3
12	**13.6**	**2.8**	117.0	"	"	2250	-	14	11.6	3.3
11	**16.4**	**2.5**	123.0	"	"	2250	-	13.5	13.3	3.1
9.8	**18.1**	**2.3**	138.4	"	"	2250	-	12	14.8	2.8
9.0	**17.5**	**2.2**	150.3	"	"	2250	-	11	14.3	2.7
8.5	**20.5**	**1.8**	160.1	"	"	2250	-	10.5	16.6	2.2
7.8	**19.8**	**2.0**	174.0	"	"	2250	-	9.4	16.4	2.4
6.2	**24**	**1.65**	220.0	"	"	2250	-	7.4	20.5	1.95
5.4	**27.5**	**1.5**	251.6	"	"	2250	-	6.5	22.5	1.8
4.5	**32**	**1.35**	300.7	"	"	2250	-	5.4	27	1.6
4.0	**35.5**	**1.25**	338.3	"	"	2250	-	4.8	29.5	1.5
3.5	**40**	**1.15**	391.3	"	"	2250	-	4.2	33	1.35
5.4	**30.5**	**3.2**	252.0	**BS06-../D04LA4**	8.4	3500	-	6.5	25.5	3.9
4.3	**37.5**	**2.8**	315.3	"	"	3500	-	5.2	31	3.4
3.8	**42**	**2.6**	358.9	"	"	3500	-	4.6	34.5	3.2
3.3	**47.5**	**2.3**	418.0	"	"	3500	-	3.9	40	2.8
2.9	**70**	**1.35**	474.8	**BS06G04-../D04LA4**	11	3500	-	3.5	58	1.6
2.5	**79**	**1.25**	552.6	"	"	3500	-	3.0	65	1.55
2.3	**88**	**1.05**	610.7	"	"	3500	-	2.7	75	1.25
2.0	**101**	**0.93**	704.7	"	"	3500	-	2.3	88	1.05
1.6	**94***	**1.0**	847.0	"	"	3500	-	2.0	94	1.0
1.5	**94***	**1.0**	939.6	"	"	3500	-	1.8	94	1.0
1.2	**94***	**1.0**	1170	"	"	3500	-	1.4	94	1.0
0.9	**94***	**1.0**	1503	"	"	3500	-	1.1	94	1.0
0.85	**94***	**1.0**	1654	"	"	3500	-	1.0	94	1.0
0.75	**94***	**1.0**	1914	"	"	3500	-	0.85	94	1.0
0.65	**94***	**1.0**	2200	"	"	3500	-	0.75	94	1.0
0.49	**94***	**1.0**	2768	"	"	3500	-	0.6	94	1.0
0.45	**94***	**1.0**	3007	"	"	3500	-	0.55	94	1.0
0.41	**94***	**1.0**	3308	"	"	3500	-	0.49	94	1.0
0.37	**94***	**1.0**	3721	"	"	3500	-	0.44	94	1.0
0.32	**94***	**1.0**	4304	"	"	3500	-	0.38	94	1.0
0.28	**98***	**1.0**	4947	"	"	3500	-	0.33	98	1.0
0.25	**98***	**1.0**	5442	"	"	3500	-	0.3	98	1.0
0.22	**100***	**1.0**	6234	"	"	3500	-	0.26	100	1.0
2.5	**67**	**2.8**	544.8	**BS10Z-../D04LA4**	21	6000	-	3.0	56	3.4
2.2	**72**	**2.6**	638.7	"	"	6000	-	2.6	61	3.1
1.8	**85**	**2.1**	788.7	"	"	6000	-	2.1	73	2.5
1.5	**101**	**1.55**	905.6	"	"	6000	-	1.8	84	1.9
1.4	**130**	**1.25**	969.9	**BS10G06-../D04LA4**	25	6000	-	1.7	107	1.5
1.2	**152**	**1.05**	1166	"	"	6000	-	1.4	130	1.25
1.1	**166**	**0.96**	1342	"	"	6000	-	1.3	141	1.15
0.9	**160***	**1.0**	1528	"	"	6000	-	1.1	160	1.0
0.85	**160***	**1.0**	1668	"	"	6000	-	1.0	160	1.0
0.7	**160***	**1.0**	1963	"	"	6000	-	0.85	160	1.0
0.6	**160***	**1.0**	2348	"	"	6000	-	0.7	160	1.0
0.55	**160***	**1.0**	2635	"	"	6000	-	0.65	160	1.0
0.47	**160***	**1.0**	2875	"	"	6000	-	0.6	160	1.0
0.41	**160***	**1.0**	3332	"	"	6000	-	0.49	160	1.0
0.38	**160***	**1.0**	3635	"	"	6000	-	0.45	160	1.0
0.33	**160***	**1.0**	4163	"	"	6000	-	0.39	160	1.0
0.29	**160***	**1.0**	4776	"	"	6000	-	0.34	160	1.0
0.26	**160***	**1.0**	5209	"	"	6000	-	0.32	160	1.0
0.23	**164***	**1.0**	6019	"	"	6000	-	0.27	164	1.0
0.21	**164***	**1.0**	6565	"	"	6000	-	0.25	164	1.0

P = 0.03 kW

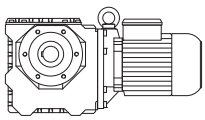

50 Hz			i	Type	m	F_{RN}	F_{RV}	60 Hz		
n_2	M_2	f_B						n_2	M_2	f_B
1/min	Nm				kg	N	N	1/min	Nm	
0.19	**164***	**1.0**	7471	**BS10G06-../D04LA4**	"	6000	-	0.22	164	1.0
0.16	**164***	**1.0**	8703	"	"	6000	-	0.19	164	1.0
1.7	**111**	**2.4**	831.7	**BS20G06-../D04LA4**	35	8000	-	2.0	94	2.9
1.4	**135**	**2.0**	1000	"	"	8000	-	1.7	111	2.4
1.1	**171**	**1.6**	1311	"	"	8000	-	1.3	145	1.85
0.9	**210**	**1.3**	1543	"	"	8000	-	1.1	171	1.6
0.85	**220**	**1.25**	1683	"	"	8000	-	1.0	189	1.45
0.7	**270***	**1.0**	2014	"	"	8000	-	0.85	270	1.0
0.55	**270***	**1.0**	2465	"	"	8000	-	0.7	270	1.0
0.48	**270***	**1.0**	2857	"	"	8000	-	0.6	270	1.0
0.44	**270***	**1.0**	3117	"	"	8000	-	0.55	270	1.0
0.38	**270***	**1.0**	3570	"	"	8000	-	0.46	270	1.0
0.33	**270***	**1.0**	4096	"	"	8000	-	0.4	270	1.0
0.28	**270***	**1.0**	4910	"	"	8000	-	0.33	270	1.0
0.23	**270***	**1.0**	5880	"	"	8000	-	0.28	270	1.0
0.19	**275***	**1.0**	7363	"	"	8000	-	0.23	275	1.0
0.17	**275***	**1.0**	8031	"	"	8000	-	0.21	275	1.0
0.15	**280***	**1.0**	9220	"	"	8000	-	0.18	280	1.0
1.2	**164**	**3.0**	1176	**BS30G06-../D04LA4**	53	10000	-	1.4	141	3.5
0.95	**205**	**2.4**	1461	"	"	10000	-	1.2	164	3.0
0.9	**215**	**2.3**	1576	"	"	10000	-	1.1	179	2.7
0.75	**260**	**1.9**	1886	"	"	10000	-	0.9	215	2.3
0.6	**325**	**1.5**	2308	"	"	10000	-	0.75	260	1.9
0.55	**355**	**1.4**	2518	"	"	10000	-	0.65	300	1.65
0.47	**420**	**1.15**	2919	"	"	10000	-	0.6	325	1.5
0.41	**480**	**1.0**	3344	"	"	10000	-	0.49	400	1.25
0.38	**490***	**1.0**	3647	"	"	10000	-	0.45	490	1.0
0.33	**490***	**1.0**	4184	"	"	10000	-	0.39	490	1.0
0.28	**510***	**1.0**	4905	"	"	10000	-	0.34	510	1.0
0.24	**520***	**1.0**	5783	"	"	10000	-	0.29	520	1.0
0.22	**520***	**1.0**	6308	"	"	10000	-	0.26	520	1.0
0.19	**520***	**1.0**	7179	"	"	10000	-	0.23	520	1.0
0.17	**520***	**1.0**	8362	"	"	10000	-	0.2	520	1.0

P = 0.04 kW

50 Hz			i	Type	m	F_{RN}	F_{RV}	60 Hz		
n_2	M_2	f_B						n_2	M_2	f_B
1/min	Nm				kg	N	N	1/min	Nm	
127	**2.45**	**10**	10.67	**BS02-../D04LA4**	3.5	1250	-	152	2.05	12
100	**2.95**	**8.5**	13.50	"	"	1250	-	120	2.45	10
75	**3.75**	**6.7**	18.00	"	"	1250	-	90	3.1	8.1
62	**4.3**	**5.8**	22.00	"	"	1250	-	74	3.6	6.9
50	**4.8**	**5.2**	27.00	"	"	1250	-	60	4.0	6.3
41	**5.5**	**4.5**	33.00	"	"	1250	-	49.5	4.6	5.4
31.5	**7.5**	**3.2**	43.00	"	"	1250	-	38	6.2	3.9
25	**8.7**	**2.5**	54.00	"	"	1250	-	30	7.2	3.1
19.5	**9.9**	**2.0**	70.00	"	"	1250	-	23.5	8.2	2.4
21.5	**11.1**	**3.2**	64.06	**BS04-../D04LA4**	3.9	2250	-	25.5	9.4	3.8
19	**13.2**	**2.9**	71.18	"	"	2250	-	23	10.9	3.5
18	**12.9**	**2.9**	77.00	"	"	2250	-	21.5	10.8	3.5
14.5	**15.5**	**2.5**	93.92	"	"	2250	-	17.5	12.8	3.0
13.5	**18.1**	**2.1**	102.9	"	"	2250	-	16	15.2	2.5
12	**18.1**	**2.1**	117.0	"	"	2250	-	14	15.5	2.5
11	**21.5**	**1.9**	123.0	"	"	2250	-	13.5	17.8	2.3
9.8	**24**	**1.75**	138.4	"	"	2250	-	12	19.7	2.1
9.0	**23**	**1.7**	150.3	"	"	2250	-	11	19.1	2.0
8.5	**27**	**1.35**	160.1	"	"	2250	-	10.5	22	1.7
7.8	**26**	**1.55**	174.0	"	"	2250	-	9.4	21.5	1.85
6.2	**32.5**	**1.25**	220.0	"	"	2250	-	7.4	27	1.5
5.4	**36.5**	**1.1**	251.6	"	"	2250	-	6.5	30.5	1.35
4.5	**43**	**1.0**	300.7	"	"	2250	-	5.4	36	1.2

BS-series worm-geared motors

Selection - worm-geared motors DHE - IE2

P = 0.04 kW

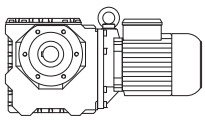

50 Hz			i	Type	m	F_{RN}	F_{RV}	60 Hz		
n_2	M_2	f_B						n_2	M_2	f_B
1/min	Nm				kg	N	N	1/min	Nm	
4.0	**47.5**	**0.93**	338.3	**BS04-../D04LA4**	"	2250	-	4.8	39.5	1.1
3.5	**53**	**0.85**	391.3	"	"	2250	-	4.2	44.5	1.0
7.9	**30.5**	**2.9**	171.0	**BS06-../D04LA4**	8.4	3500	-	9.5	25.5	3.5
6.2	**36**	**2.7**	220.0	"	"	3500	-	7.4	30	3.3
5.4	**41**	**2.4**	252.0	"	"	3500	-	6.5	34	2.9
4.3	**50**	**2.1**	315.3	"	"	3500	-	5.2	41.5	2.6
3.8	**56**	**1.95**	358.9	"	"	3500	-	4.6	46.5	2.4
3.3	**63**	**1.75**	418.0	"	"	3500	-	3.9	53	2.1
2.9	**93**	**1.0**	474.8	**BS06G04-../D04LA4**	11	3500	-	3.5	77	1.2
2.5	**105**	**0.95**	552.6	"	"	3500	-	3.0	87	1.15
2.3	**117**	**0.8**	610.7	"	"	3500	-	2.7	100	0.94
3.8	**62**	**3.1**	360.3	**BS10Z-../D04LA4**	21	6000	-	4.5	52	3.7
3.2	**72**	**2.6**	432.4	"	"	6000	-	3.8	61	3.1
2.5	**90**	**2.1**	544.8	"	"	6000	-	3.0	75	2.5
2.2	**97**	**1.95**	638.7	"	"	6000	-	2.6	82	2.3
1.8	**114**	**1.6**	788.7	"	"	6000	-	2.1	98	1.85
1.5	**134**	**1.2**	905.6	"	"	6000	-	1.8	112	1.4
1.4	**174**	**0.92**	969.9	**BS10G06-../D04LA4**	25	6000	-	1.7	143	1.1
1.2	**200**	**0.8**	1166	"	"	6000	-	1.4	174	0.92
1.8	**114**	**2.7**	763.4	**BS20Z-../D04LA4**	32	8000	-	2.2	93	3.3
1.7	**148**	**1.8**	831.7	**BS20G06-../D04LA4**	35	8000	-	2.0	126	2.1
1.4	**180**	**1.5**	1000	"	"	8000	-	1.7	148	1.8
1.1	**225**	**1.2**	1311	"	"	8000	-	1.3	193	1.4
1.4	**188**	**2.6**	1022	**BS30G06-../D04LA4**	53	10000	-	1.6	164	3.0
1.2	**215**	**2.3**	1176	"	"	10000	-	1.4	188	2.6
0.95	**275**	**1.8**	1461	"	"	10000	-	1.2	215	2.3
0.9	**290**	**1.7**	1576	"	"	10000	-	1.1	235	2.1
0.75	**350**	**1.4**	1886	"	"	10000	-	0.9	290	1.7
0.6	**435**	**1.15**	2308	"	"	10000	-	0.75	350	1.4
0.55	**475**	**1.05**	2518	"	"	10000	-	0.65	405	1.2

P = 0.06 kW

50 Hz			i	Type	m	F_{RN}	F_{RV}	60 Hz		
n_2	M_2	f_B						n_2	M_2	f_B
1/min	Nm				kg	N	N	1/min	Nm	
295	**1.7**	**8.8**	4.60	**BS02-../D04LA4**	3.5	1000	-	355	1.42	11
250	**2.0**	**10**	5.40	"	"	1000	-	300	1.68	12
200	**2.45**	**10**	6.75	"	"	1000	-	240	2.05	12
164	**2.9**	**8.6**	8.25	"	"	1100	-	197	2.4	10
127	**3.65**	**6.8**	10.67	"	"	1250	-	152	3.05	8.2
100	**4.45**	**5.6**	13.50	"	"	1250	-	120	3.7	6.8
75	**5.6**	**4.5**	18.00	"	"	1250	-	90	4.7	5.3
62	**6.4**	**3.9**	22.00	"	"	1250	-	74	5.4	4.6
50	**7.2**	**3.5**	27.00	"	"	1250	-	60	6.0	4.2
41	**8.3**	**3.0**	33.00	"	"	1250	-	49.5	6.9	3.6
31.5	**11.2**	**2.1**	43.00	"	"	1250	-	38	9.3	2.6
25	**13**	**1.7**	54.00	"	"	1250	-	30	10.8	2.0
19.5	**14.9**	**1.35**	70.00	"	"	1250	-	23.5	12.4	1.6
18	**16.2**	**2.5**	75.00	**BS03-../D05LA4**	5.4	1950	-	22	13.2	3.0
35.5	**11.1**	**3.3**	38.42	**BS04-../D04LA4**	3.9	2250	-	42.5	9.3	4.0
28.5	**13.6**	**2.8**	47.86	"	"	2250	-	34	11.4	3.3
21.5	**16.7**	**2.2**	64.06	"	"	2250	-	25.5	14.1	2.6
19	**19.9**	**1.9**	71.18	"	"	2250	-	23	16.4	2.3
18	**19.4**	**1.95**	77.00	"	"	2250	-	21.5	16.2	2.3
14.5	**23**	**1.65**	93.92	"	"	2250	-	17.5	19.3	1.95
13.5	**27**	**1.4**	102.9	"	"	2250	-	16	22.5	1.7
12	**27**	**1.4**	117.0	"	"	2250	-	14	23	1.65
11	**32.5**	**1.25**	123.0	"	"	2250	-	13.5	26.5	1.55

P = 0.06 kW

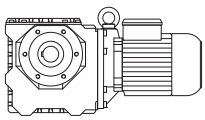

50 Hz			i	Type	m	F_{RN}	F_{RV}	60 Hz		
n_2	M_2	f_B						n_2	M_2	f_B
1/min	Nm				kg	N	N	1/min	Nm	
9.8	**36**	**1.15**	138.4	**BS04-../D04LA4**	"	2250	-	12	29.5	1.4
9.0	**35**	**1.1**	150.3	"	"	2250	-	11	28.5	1.35
8.5	**41**	**0.9**	160.1	"	"	2250	-	10.5	33	1.1
7.8	**39.5**	**1.0**	174.0	"	"	2250	-	9.4	32.5	1.25
6.2	**48.5**	**0.82**	220.0	"	"	2250	-	7.4	41	0.98
11.5	**32**	**2.9**	118.8	**BS06-../D04LA4**	8.4	3500	-	14	26.5	3.5
10.5	**36.5**	**2.8**	129.0	"	"	3500	-	13	29.5	3.5
9.2	**40**	**2.7**	146.8	"	"	3500	-	11.5	32	3.3
7.8	**44**	**2.2**	174.0	"	"	3500	-	9.4	36.5	2.7
6.2	**54**	**1.8**	220.0	"	"	3500	-	7.4	45.5	2.2
5.4	**61**	**1.6**	252.0	"	"	3500	-	6.5	51	1.95
4.3	**75**	**1.4**	315.3	"	"	3500	-	5.2	62	1.7
3.8	**84**	**1.3**	358.9	"	"	3500	-	4.6	69	1.6
3.3	**95**	**1.15**	418.0	"	"	3500	-	3.9	80	1.4
11.5	**36.5**	**3.3**	119.6	**BS10-../D06LA4**	23	6000	-	14	30	4.0
6.3	**58**	**3.1**	216.6	"	"	6000	-	7.5	48.5	3.7
5.4	**67**	**2.7**	254.0	**BS10Z-../D06LA4**	24	6000	-	6.4	57	3.2
4.5	**78**	**2.4**	302.5	"	"	6000	-	5.4	65	2.9
3.8	**93**	**2.0**	360.3	"	"	6000	-	4.5	78	2.4
3.2	**109**	**1.75**	432.4	"	"	6000	-	3.8	91	2.1
2.5	**135**	**1.4**	544.8	"	"	6000	-	3.0	112	1.7
2.2	**145**	**1.3**	638.7	"	"	6000	-	2.6	123	1.55
1.8	**171**	**1.05**	788.7	"	"	6000	-	2.1	147	1.2
3.2	**109**	**3.0**	430.8	**BS20Z-../D06LA4**	35	8000	-	3.8	91	3.6
2.6	**121**	**3.0**	539.7	"	"	8000	-	3.1	101	3.6
2.2	**140**	**2.4**	619.2	"	"	8000	-	2.7	114	2.9
1.8	**171**	**1.8**	763.4	"	"	8000	-	2.2	140	2.2
1.7	**220**	**1.25**	831.7	**BS20G06-../D06LA4**	38	8000	-	2.0	189	1.45
1.4	**270**	**1.0**	1000	"	"	8000	-	1.7	220	1.25
1.7	**195**	**2.4**	804.1	**BS30Z-../D06LA4**	54	10000	-	2.1	158	3.0
1.5	**215**	**2.1**	932.0	"	"	10000	-	1.8	181	2.5
1.4	**280**	**1.75**	1022	**BS30G06-../D06LA4**	56	10000	-	1.6	245	2.0
1.2	**325**	**1.5**	1176	"	"	10000	-	1.4	280	1.75
0.95	**415**	**1.2**	1461	"	"	10000	-	1.2	325	1.5
0.9	**435**	**1.15**	1576	"	"	10000	-	1.1	355	1.4
1.5	**225**	**3.3**	908.2	**BS40Z-../D06LA4**	68	15000	-	1.8	187	4.0
1.4	**285**	**3.1**	965.5	**BS40G10-../D06LA4**	73	15000	-	1.7	235	3.7
1.2	**330**	**2.7**	1180	"	"	15000	-	1.4	285	3.1
0.95	**420**	**2.1**	1499	"	"	15000	-	1.1	360	2.4
0.8	**500**	**1.75**	1785	"	"	15000	-	0.95	420	2.1
0.65	**610**	**1.45**	2126	"	"	15000	-	0.8	500	1.75
0.6	**660**	**1.35**	2304	"	"	15000	-	0.75	530	1.65
0.55	**720**	**1.2**	2552	"	"	15000	-	0.65	610	1.45
0.47	**850**	**1.05**	2902	"	"	15000	-	0.6	660	1.35

P = 0.09 kW

50 Hz			i	Type	m	F_{RN}	F_{RV}	60 Hz		
n_2	M_2	f_B						n_2	M_2	f_B
1/min	Nm				kg	N	N	1/min	Nm	
295	**2.55**	**5.9**	4.60	**BS02-../D04LA4**	3.5	1000	-	355	2.1	7.1
250	**3.0**	**6.7**	5.40	"	"	1000	-	300	2.5	8.0
200	**3.65**	**6.8**	6.75	"	"	1000	-	240	3.05	8.2
164	**4.4**	**5.7**	8.25	"	"	1100	-	197	3.65	6.8
127	**5.5**	**4.5**	10.67	"	"	1250	-	152	4.6	5.4
100	**6.7**	**3.7**	13.50	"	"	1250	-	120	5.5	4.5
75	**8.4**	**3.0**	18.00	"	"	1250	-	90	7.0	3.6
62	**9.7**	**2.6**	22.00	"	"	1250	-	74	8.1	3.1
50	**10.8**	**2.3**	27.00	"	"	1250	-	60	9.0	2.8
41	**12.5**	**2.0**	33.00	"	"	1250	-	49.5	10.4	2.4

BS-series worm-geared motors

Selection - worm-geared motors DHE - IE2

P = 0.09 kW

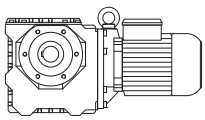

50 Hz			i	Type	m	F_{RN}	F_{RV}	60 Hz		
n_2	M_2	f_B						n_2	M_2	f_B
1/min	Nm				kg	N	N	1/min	Nm	
31.5	**16.9**	**1.4**	43.00	**BS02-../D04LA4**	"	1250	-	38	14	1.7
25	**19.5**	**1.15**	54.00	"	"	1250	-	30	16.3	1.35
19.5	**22**	**0.91**	70.00	"	"	1250	-	23.5	18.6	1.1
27	**18.4**	**3.0**	50.00	**BS03-../D05LA4**	5.4	1950	-	32.5	15.3	3.6
22	**20.5**	**2.3**	62.00	"	"	1950	-	26.5	17.1	2.8
18	**24**	**1.65**	75.00	"	"	1950	-	22	19.9	2.0
56	**11.6**	**2.9**	24.25	**BS04-../D04LA4**	3.9	2250	-	67	9.7	3.5
52	**11.7**	**3.2**	26.21	"	"	2250	-	62	9.8	3.9
43	**13.9**	**2.7**	31.50	"	"	2250	-	52	11.5	3.3
35.5	**16.7**	**2.2**	38.42	"	"	2250	-	42.5	13.9	2.7
28.5	**20.5**	**1.85**	47.86	"	"	2250	-	34	17.1	2.2
21.5	**25**	**1.45**	64.06	"	"	2250	-	25.5	21	1.7
19	**29.5**	**1.3**	71.18	"	"	2250	-	23	24.5	1.55
18	**29**	**1.3**	77.00	"	"	2250	-	21.5	24	1.6
14.5	**34.5**	**1.1**	93.92	"	"	2250	-	17.5	28.5	1.35
13.5	**40.5**	**0.94**	102.9	"	"	2250	-	16	34	1.1
12	**40.5**	**0.94**	117.0	"	"	2250	-	14	34.5	1.1
11	**49**	**0.84**	123.0	"	"	2250	-	13.5	40	1.05
21.5	**27**	**3.0**	64.06	**BS06-../D04LA4**	8.4	3500	-	25.5	22.5	3.6
19	**32**	**2.9**	71.18	"	"	3500	-	23	26.5	3.5
18	**31.5**	**2.7**	77.00	"	"	3500	-	21.5	26.5	3.2
15	**40**	**2.5**	90.00	"	"	3500	-	18	33	3.0
13.5	**43.5**	**2.3**	103.1	"	"	3500	-	16	37	2.7
11.5	**48.5**	**1.95**	118.8	"	"	3500	-	14	39.5	2.4
10.5	**54**	**1.95**	129.0	"	"	3500	-	13	44	2.4
9.2	**60**	**1.75**	146.8	"	"	3500	-	11.5	48.5	2.2
7.8	**66**	**1.5**	174.0	"	"	3500	-	9.4	54	1.8
6.2	**81**	**1.2**	220.0	"	"	3500	-	7.4	68	1.45
5.4	**92**	**1.1**	252.0	"	"	3500	-	6.5	76	1.3
4.3	**113**	**0.94**	315.3	"	"	3500	-	5.2	94	1.15
3.8	**126**	**0.87**	358.9	"	"	3500	-	4.6	104	1.05
11.5	**55**	**2.2**	119.6	**BS10-../D06LA4**	23	6000	-	14	45	2.7
10.5	**52**	**3.2**	130.3	"	"	6000	-	12.5	44	3.7
8.9	**61**	**2.7**	152.7	"	"	6000	-	11	50	3.3
7.2	**76**	**2.2**	188.6	"	"	6000	-	8.6	63	2.7
6.3	**87**	**2.1**	216.6	"	"	6000	-	7.5	73	2.5
5.4	**101**	**1.8**	254.0	**BS10Z-../D06LA4**	24	6000	-	6.4	85	2.1
4.5	**118**	**1.6**	302.5	"	"	6000	-	5.4	98	1.95
3.8	**140**	**1.35**	360.3	"	"	6000	-	4.5	118	1.6
3.2	**163**	**1.15**	432.4	"	"	6000	-	3.8	137	1.4
2.5	**200**	**0.95**	544.8	"	"	6000	-	3.0	169	1.1
2.2	**215**	**0.88**	638.7	"	"	6000	-	2.6	185	1.05
6.0	**91**	**3.2**	225.6	**BS20-../D06LA4**	34	8000	-	7.2	76	3.8
5.3	**103**	**2.9**	257.8	**BS20Z-../D06LA4**	35	8000	-	6.3	87	3.4
4.5	**120**	**2.5**	300.1	"	"	8000	-	5.4	100	3.0
3.8	**140**	**2.3**	359.9	"	"	8000	-	4.6	115	2.8
3.2	**163**	**2.0**	430.8	"	"	8000	-	3.8	137	2.4
2.6	**181**	**2.0**	539.7	"	"	8000	-	3.1	152	2.4
2.2	**210**	**1.55**	619.2	"	"	8000	-	2.7	171	1.95
1.8	**255**	**1.2**	763.4	"	"	8000	-	2.2	210	1.5
1.7	**330**	**0.82**	831.7	**BS20G06-../D06LA4**	38	8000	-	2.0	280	0.96
3.8	**167**	**2.4**	359.6	**BS30Z-../D06LA4**	54	10000	-	4.6	138	2.9
3.0	**183**	**3.3**	457.3	"	"	10000	-	3.6	152	3.9
2.6	**210**	**2.9**	539.3	"	"	10000	-	3.1	177	3.4
2.1	**245**	**2.4**	651.0	"	"	10000	-	2.5	205	2.8
1.7	**290**	**1.65**	804.1	"	"	10000	-	2.1	235	2.0
1.5	**325**	**1.4**	932.0	"	"	10000	-	1.8	270	1.65
1.4	**420**	**1.15**	1022	**BS30G06-../D06LA4**	56	10000	-	1.6	370	1.3
1.2	**490**	**1.0**	1176	"	"	10000	-	1.4	420	1.15

P = 0.09 kW

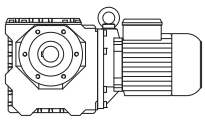

50 Hz			i	Type	m	F_{RN}	F_{RV}	60 Hz		
n_2	M_2	f_B						n_2	M_2	f_B
1/min	Nm				kg	N	N	1/min	Nm	
1.9	**270**	**2.8**	736.5	**BS40Z-../D06LA4**	68	15000	-	2.2	230	3.3
1.5	**335**	**2.2**	908.2	"	"	15000	-	1.8	280	2.7
1.4	**425**	**2.1**	965.5	**BS40G10-../D06LA4**	73	15000	-	1.7	350	2.5
1.2	**500**	**1.75**	1180	"	"	15000	-	1.4	425	2.1
0.95	**630**	**1.4**	1499	"	"	15000	-	1.1	540	1.65
0.8	**750**	**1.15**	1785	"	"	15000	-	0.95	630	1.4

P = 0.12 kW

50 Hz			i	Type	m	F_{RN}	F_{RV}	60 Hz		
n_2	M_2	f_B						n_2	M_2	f_B
1/min	Nm				kg	N	N	1/min	Nm	
295	**3.4**	**4.4**	4.60	**BS02-../D04LA4**	3.5	1000	-	355	2.8	5.4
250	**4.0**	**5.0**	5.40	"	"	1000	-	300	3.35	6.0
200	**4.9**	**5.1**	6.75	"	"	1000	-	240	4.1	6.1
164	**5.8**	**4.3**	8.25	"	"	1100	-	197	4.85	5.2
127	**7.3**	**3.4**	10.67	"	"	1250	-	152	6.1	4.1
100	**8.9**	**2.8**	13.50	"	"	1250	-	120	7.4	3.4
75	**11.3**	**2.2**	18.00	"	"	1250	-	90	9.4	2.7
62	**12.9**	**1.95**	22.00	"	"	1250	-	74	10.8	2.3
50	**14.4**	**1.75**	27.00	"	"	1250	-	60	12	2.1
41	**16.7**	**1.5**	33.00	"	"	1250	-	49.5	13.8	1.8
31.5	**22.5**	**1.05**	43.00	"	"	1250	-	38	18.6	1.3
25	**26**	**0.85**	54.00	"	"	1250	-	30	21.5	1.0
41	**17**	**3.2**	33.00	**BS03-../D05LA4**	5.4	1950	-	49.5	14.1	3.9
35	**20.5**	**2.7**	39.00	"	"	1950	-	42	17.4	3.2
27	**24.5**	**2.2**	50.00	"	"	1950	-	32.5	20	2.8
22	**27.5**	**1.75**	62.00	"	"	1950	-	26.5	22.5	2.1
18	**32**	**1.25**	75.00	"	"	1950	-	22	26.5	1.5
83	**10.6**	**3.3**	16.31	**BS04-../D04LA4**	3.9	1970	-	100	8.8	4.0
65	**13.3**	**2.8**	20.96	"	"	2100	-	78	11.1	3.3
56	**15.5**	**2.2**	24.25	"	"	2250	-	67	12.9	2.6
52	**15.6**	**2.4**	26.21	"	"	2250	-	62	13.1	2.9
43	**18.6**	**2.0**	31.50	"	"	2250	-	52	15.4	2.5
35.5	**22**	**1.7**	38.42	"	"	2250	-	42.5	18.6	2.0
28.5	**27**	**1.4**	47.86	"	"	2250	-	34	22.5	1.7
21.5	**33.5**	**1.05**	64.06	"	"	2250	-	25.5	28	1.3
19	**39.5**	**0.96**	71.18	"	"	2250	-	23	32.5	1.15
18	**38.5**	**0.99**	77.00	"	"	2250	-	21.5	32.5	1.15
14.5	**46.5**	**0.82**	93.92	"	"	2250	-	17.5	38.5	0.99
28	**29**	**3.0**	48.60	**BS06-../D04LA4**	8.4	3500	-	33.5	24.5	3.6
23.5	**34.5**	**2.6**	58.15	"	"	3500	-	28	29	3.1
21.5	**36**	**2.2**	64.06	"	"	3500	-	25.5	30.5	2.6
19	**42.5**	**2.2**	71.18	"	"	3500	-	23	35	2.7
18	**42.5**	**2.0**	77.00	"	"	3500	-	21.5	35.5	2.4
15	**53**	**1.85**	90.00	"	"	3500	-	18	44.5	2.2
13.5	**58**	**1.7**	103.1	"	"	3500	-	16	49	2.0
11.5	**64**	**1.45**	118.8	"	"	3500	-	14	53	1.75
10.5	**73**	**1.4**	129.0	"	"	3500	-	13	59	1.75
9.2	**80**	**1.35**	146.8	"	"	3500	-	11.5	64	1.65
7.8	**88**	**1.1**	174.0	"	"	3500	-	9.4	73	1.35
6.2	**109**	**0.9**	220.0	"	"	3500	-	7.4	91	1.1
5.4	**123**	**0.8**	252.0	"	"	3500	-	6.5	102	0.97
16.5	**51**	**2.9**	84.36	**BS10-../D06LA4**	23	5300	-	19.5	43	3.5
13.5	**54**	**3.0**	103.4	"	"	5600	-	16	45.5	3.5
11.5	**73**	**1.65**	119.6	"	"	6000	-	14	60	2.0
10.5	**69**	**2.4**	130.3	"	"	6000	-	12.5	58	2.8
8.9	**82**	**2.0**	152.7	"	"	6000	-	11	66	2.5
7.2	**101**	**1.7**	188.6	"	"	6000	-	8.6	85	2.0
6.3	**116**	**1.55**	216.6	"	"	6000	-	7.5	97	1.85

P = 0.12 kW

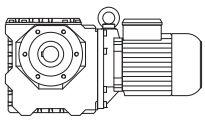

50 Hz			i	Type	m	F_{RN}	F_{RV}	60 Hz		
n_2	M_2	f_B						n_2	M_2	f_B
1/min	Nm				kg	N	N	1/min	Nm	
5.4	**135**	**1.35**	254.0	**BS10Z-../D06LA4**	24	6000	-	6.4	114	1.6
4.5	**157**	**1.2**	302.5	"	"	6000	-	5.4	131	1.45
3.8	**186**	**1.0**	360.3	"	"	6000	-	4.5	157	1.2
3.2	**215**	**0.88**	432.4	"	"	6000	-	3.8	183	1.05
8.5	**88**	**3.1**	159.4	**BS20-../D06LA4**	34	8000	-	10.5	72	3.8
7.4	**102**	**2.7**	183.0	"	"	8000	-	8.9	84	3.3
6.0	**122**	**2.4**	225.6	"	"	8000	-	7.2	101	2.9
5.3	**138**	**2.1**	257.8	**BS20Z-../D06LA4**	35	8000	-	6.3	116	2.5
4.5	**160**	**1.9**	300.1	"	"	8000	-	5.4	133	2.3
3.8	**186**	**1.7**	359.9	"	"	8000	-	4.6	154	2.1
3.2	**215**	**1.55**	430.8	"	"	8000	-	3.8	183	1.8
2.6	**240**	**1.5**	539.7	"	"	8000	-	3.1	200	1.85
2.2	**280**	**1.2**	619.2	"	"	8000	-	2.7	225	1.45
1.8	**340**	**0.91**	763.4	"	"	8000	-	2.2	280	1.1
3.8	**220**	**1.8**	359.6	**BS30Z-../D06LA4**	54	10000	-	4.6	184	2.1
3.5	**210**	**2.8**	390.2	"	"	10000	-	4.2	177	3.3
3.0	**240**	**2.5**	457.3	"	"	10000	-	3.6	200	3.0
2.6	**280**	**2.1**	539.3	"	"	10000	-	3.1	235	2.6
2.1	**325**	**1.8**	651.0	"	"	10000	-	2.5	275	2.1
1.7	**390**	**1.2**	804.1	"	"	10000	-	2.1	315	1.5
1.5	**435**	**1.05**	932.0	"	"	10000	-	1.8	360	1.25
1.4	**560**	**0.88**	1022	**BS30G06-../D06LA4**	56	10000	-	1.6	490	1.0
2.3	**300**	**3.0**	612.1	**BS40Z-../D06LA4**	68	15000	-	2.7	255	3.6
1.9	**360**	**2.1**	736.5	"	"	15000	-	2.2	310	2.4
1.5	**450**	**1.65**	908.2	"	"	15000	-	1.8	375	2.0
1.4	**570**	**1.55**	965.5	**BS40G10-../D06LA4**	73	15000	-	1.7	470	1.85
1.2	**660**	**1.35**	1180	"	"	15000	-	1.4	570	1.55
0.95	**840**	**1.05**	1499	"	"	15000	-	1.1	720	1.2

P = 0.18 kW

50 Hz			i	Type	m	F_{RN}	F_{RV}	60 Hz		
n_2	M_2	f_B						n_2	M_2	f_B
1/min	Nm				kg	N	N	1/min	Nm	
295	**5.1**	**2.9**	4.60	**BS02-../D05LA4**	5.3	1000	-	355	4.25	3.5
250	**6.0**	**3.3**	5.40	"	"	1000	-	300	5.0	4.0
200	**7.3**	**3.4**	6.75	"	"	1000	-	240	6.1	4.1
164	**8.8**	**2.8**	8.25	"	"	1100	-	197	7.3	3.4
127	**11**	**2.3**	10.67	"	"	1250	-	152	9.2	2.7
100	**13.4**	**1.85**	13.50	"	"	1250	-	120	11.1	2.3
75	**16.9**	**1.5**	18.00	"	"	1250	-	90	14.1	1.75
62	**19.4**	**1.3**	22.00	"	"	1250	-	74	16.2	1.55
50	**21.5**	**1.15**	27.00	"	"	1250	-	60	18	1.4
41	**25**	**1.0**	33.00	"	"	1250	-	49.5	20.5	1.2
72	**18.1**	**3.0**	19.00	**BS03-../D05LA4**	5.4	1950	-	86	15.1	3.6
54	**21.5**	**2.6**	25.00	"	"	1950	-	65	18.2	3.0
41	**25.5**	**2.2**	33.00	"	"	1950	-	49.5	21	2.6
35	**31**	**1.75**	39.00	"	"	1950	-	42	26	2.1
27	**36.5**	**1.5**	50.00	"	"	1950	-	32.5	30.5	1.8
22	**41**	**1.15**	62.00	"	"	1950	-	26.5	34	1.4
18	**48.5**	**0.82**	75.00	"	"	1950	-	22	39.5	1.0
126	**10.6**	**3.0**	10.73	**BS04-../D05LA4**	5.8	1600	-	151	8.8	3.6
104	**12.7**	**2.6**	13.09	"	"	1760	-	124	10.6	3.1
83	**15.9**	**2.2**	16.31	"	"	1970	-	100	13.2	2.7
65	**20**	**1.85**	20.96	"	"	2100	-	78	16.7	2.2
56	**23**	**1.5**	24.25	"	"	2250	-	67	19.4	1.75
52	**23**	**1.65**	26.21	"	"	2250	-	62	19.6	1.95
43	**27.5**	**1.4**	31.50	"	"	2250	-	52	23	1.65
35.5	**33**	**1.1**	38.42	"	"	2250	-	42.5	27.5	1.35
28.5	**41**	**0.93**	47.86	"	"	2250	-	34	34	1.1

P = 0.18 kW

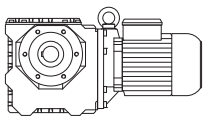

50 Hz			i	Type	m	F_{RN}	F_{RV}	60 Hz		
n_2	M_2	f_B						n_2	M_2	f_B
1/min	Nm				kg	N	N	1/min	Nm	
56	**24.5**	**3.1**	24.25	**BS06-../D05LA4**	10	2600	-	67	20.5	3.8
52	**24**	**3.2**	26.21	"	"	3000	-	62	20	3.9
43	**29**	**2.8**	31.50	"	"	3200	-	52	24	3.3
33	**37.5**	**2.3**	41.29	"	"	3500	-	39.5	31	2.8
28	**44**	**2.0**	48.60	"	"	3500	-	33.5	36.5	2.4
23.5	**51**	**1.8**	58.15	"	"	3500	-	28	43.5	2.1
21.5	**54**	**1.5**	64.06	"	"	3500	-	25.5	45.5	1.75
19	**64**	**1.45**	71.18	"	"	3500	-	23	53	1.75
18	**63**	**1.35**	77.00	"	"	3500	-	21.5	53	1.6
15	**80**	**1.25**	90.00	"	"	3500	-	18	66	1.5
13.5	**87**	**1.15**	103.1	"	"	3500	-	16	74	1.35
11.5	**97**	**0.97**	118.8	"	"	3500	-	14	79	1.2
10.5	**109**	**0.95**	129.0	"	"	3500	-	13	88	1.2
9.2	**121**	**0.88**	146.8	"	"	3500	-	11.5	97	1.1
28.5	**45**	**3.2**	47.59	**BS10-../D06LA4**	23	4050	-	34.5	37	3.9
24	**53**	**2.8**	57.12	"	"	4350	-	28.5	44.5	3.4
22.5	**51**	**2.9**	60.74	"	"	4550	-	27	42.5	3.5
19	**66**	**2.4**	71.96	"	"	5000	-	23	55	2.9
16.5	**77**	**1.95**	84.36	"	"	5300	-	19.5	65	2.3
13.5	**81**	**2.0**	103.4	"	"	5600	-	16	68	2.4
11.5	**110**	**1.1**	119.6	"	"	6000	-	14	90	1.35
10.5	**104**	**1.6**	130.3	"	"	6000	-	12.5	88	1.85
8.9	**123**	**1.35**	152.7	"	"	6000	-	11	100	1.65
7.2	**152**	**1.1**	188.6	"	"	6000	-	8.6	127	1.35
6.3	**174**	**1.05**	216.6	"	"	6000	-	7.5	146	1.25
5.4	**200**	**0.9**	254.0	**BS10Z-../D06LA4**	24	6000	-	6.4	171	1.05
4.5	**235**	**0.81**	302.5	"	"	6000	-	5.4	197	0.96
13	**87**	**3.1**	106.3	**BS20-../D06LA4**	34	7600	-	15.5	73	3.7
11	**103**	**2.6**	127.3	"	"	8000	-	13	87	3.1
8.5	**133**	**2.1**	159.4	"	"	8000	-	10.5	108	2.5
7.4	**153**	**1.85**	183.0	"	"	8000	-	8.9	127	2.2
6.0	**183**	**1.6**	225.6	"	"	8000	-	7.2	152	1.9
5.3	**205**	**1.45**	257.8	**BS20Z-../D06LA4**	35	8000	-	6.3	174	1.7
4.5	**240**	**1.25**	300.1	"	"	8000	-	5.4	200	1.5
3.8	**280**	**1.15**	359.9	"	"	8000	-	4.6	230	1.4
3.2	**325**	**1.0**	430.8	"	"	8000	-	3.8	275	1.2
2.6	**360**	**1.0**	539.7	"	"	8000	-	3.1	300	1.2
6.3	**180**	**2.9**	216.4	**BS30-../D06LA4**	51	10000	-	7.5	151	3.4
5.2	**215**	**2.6**	261.6	**BS30Z-../D06LA4**	54	10000	-	6.2	182	3.1
4.5	**245**	**2.4**	306.6	"	"	10000	-	5.3	210	2.8
3.8	**330**	**1.2**	359.6	"	"	10000	-	4.6	275	1.45
3.5	**315**	**1.85**	390.2	"	"	10000	-	4.2	265	2.2
3.0	**365**	**1.65**	457.3	"	"	10000	-	3.6	305	1.95
2.6	**420**	**1.45**	539.3	"	"	10000	-	3.1	350	1.7
2.1	**490**	**1.2**	651.0	"	"	10000	-	2.5	410	1.4
1.7	**580**	**0.82**	804.1	"	"	10000	-	2.1	470	1.0
4.7	**270**	**2.6**	287.7	**BS40Z-../D06LA4**	68	15000	-	5.7	220	3.3
3.1	**345**	**2.9**	446.8	"	"	15000	-	3.7	290	3.4
2.6	**415**	**2.7**	520.8	"	"	15000	-	3.2	335	3.3
2.3	**455**	**2.0**	612.1	"	"	15000	-	2.7	385	2.4
1.9	**540**	**1.4**	736.5	"	"	15000	-	2.2	465	1.65
1.5	**670**	**1.1**	908.2	"	"	15000	-	1.8	560	1.35
1.4	**850**	**1.05**	965.5	**BS40G10-../D06LA4**	73	15000	-	1.7	700	1.25
1.2	**1000**	**0.88**	1180	"	"	15000	-	1.4	850	1.05

BS-series worm-geared motors

Selection - worm-geared motors DHE - IE2

P = 0.25 kW

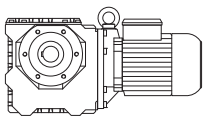

50 Hz			i	Type	m	F_{RN}	F_{RV}	60 Hz		
n_2	M_2	f_B						n_2	M_2	f_B
1/min	Nm				kg	N	N	1/min	Nm	
295	**7.1**	**2.1**	4.60	**BS02-../D05LA4**	5.3	1000	-	355	5.9	2.5
250	**8.4**	**2.4**	5.40	"	"	1000	-	300	7.0	2.9
200	**10.2**	**2.5**	6.75	"	"	1000	-	240	8.5	2.9
164	**12.2**	**2.0**	8.25	"	"	1100	-	197	10.1	2.5
127	**15.4**	**1.6**	10.67	"	"	1250	-	152	12.8	1.95
100	**18.6**	**1.35**	13.50	"	"	1250	-	120	15.5	1.6
75	**23.5**	**1.05**	18.00	"	"	1250	-	90	19.6	1.3
62	**26.5**	**0.94**	22.00	"	"	1250	-	74	22.5	1.1
50	**30**	**0.83**	27.00	"	"	1250	-	60	25	1.0
100	**18.6**	**3.0**	13.50	**BS03-../D05LA4**	5.4	1600	-	120	15.5	3.5
72	**25**	**2.2**	19.00	"	"	1950	-	86	21	2.6
54	**30.5**	**1.8**	25.00	"	"	1950	-	65	25	2.2
41	**35.5**	**1.55**	33.00	"	"	1950	-	49.5	29	1.9
35	**43.5**	**1.25**	39.00	"	"	1950	-	42	36	1.55
27	**51**	**1.1**	50.00	"	"	1950	-	32.5	42.5	1.3
22	**57**	**0.84**	62.00	"	"	1950	-	26.5	47.5	1.0
225	**8.2**	**3.2**	6.13	**BS04-../D05LA4**	5.8	1320	-	265	7.0	3.7
152	**12.2**	**2.5**	8.93	"	"	1500	-	182	10.2	2.9
126	**14.7**	**2.2**	10.73	"	"	1600	-	151	12.3	2.6
104	**17.6**	**1.9**	13.09	"	"	1760	-	124	14.8	2.2
83	**22**	**1.6**	16.31	"	"	1970	-	100	18.3	1.9
65	**27.5**	**1.35**	20.96	"	"	2100	-	78	23	1.6
56	**32**	**1.05**	24.25	"	"	2250	-	67	27	1.25
52	**32.5**	**1.15**	26.21	"	"	2250	-	62	27	1.4
43	**38.5**	**0.99**	31.50	"	"	2250	-	52	32	1.2
35.5	**46**	**0.8**	38.42	"	"	2250	-	42.5	38.5	0.96
82	**23**	**3.1**	16.56	**BS06-../D05LA4**	10	2400	-	98	19.4	3.7
69	**27.5**	**2.7**	19.82	"	"	2500	-	82	23	3.3
56	**34**	**2.3**	24.25	"	"	2600	-	67	28.5	2.7
52	**33.5**	**2.3**	26.21	"	"	3000	-	62	28	2.8
43	**40.5**	**2.0**	31.50	"	"	3200	-	52	33.5	2.4
33	**52**	**1.65**	41.29	"	"	3500	-	39.5	43.5	2.0
28	**61**	**1.45**	48.60	"	"	3500	-	33.5	51	1.75
23.5	**72**	**1.25**	58.15	"	"	3500	-	28	60	1.5
21.5	**75**	**1.05**	64.06	"	"	3500	-	25.5	63	1.25
19	**89**	**1.05**	71.18	"	"	3500	-	23	73	1.3
18	**88**	**0.97**	77.00	"	"	3500	-	21.5	74	1.15
15	**111**	**0.88**	90.00	"	"	3500	-	18	92	1.05
13.5	**122**	**0.82**	103.1	"	"	3500	-	16	102	0.98
40.5	**44.5**	**3.0**	33.55	**BS10-../D06LA4**	23	3550	-	48.5	37	3.6
34	**52**	**2.7**	39.96	"	"	3800	-	41	43.5	3.2
28.5	**62**	**2.3**	47.59	"	"	4050	-	34.5	51	2.8
24	**73**	**2.1**	57.12	"	"	4350	-	28.5	61	2.5
22.5	**71**	**2.1**	60.74	"	"	4550	-	27	59	2.5
19	**92**	**1.75**	71.96	"	"	5000	-	23	76	2.1
16.5	**107**	**1.4**	84.36	"	"	5300	-	19.5	90	1.65
13.5	**113**	**1.4**	103.4	"	"	5600	-	16	95	1.7
10.5	**145**	**1.15**	130.3	"	"	6000	-	12.5	122	1.35
8.9	**171**	**0.96**	152.7	"	"	6000	-	11	138	1.2
7.2	**210**	**0.81**	188.6	"	"	6000	-	8.6	177	0.96
19.5	**91**	**3.3**	70.30	**BS20-../D06LA4**	34	6300	-	23.5	76	3.9
18	**87**	**3.1**	76.18	"	"	6600	-	21.5	73	3.7
15.5	**101**	**2.7**	88.67	"	"	7000	-	18.5	85	3.2
13	**121**	**2.2**	106.3	"	"	7600	-	15.5	101	2.7
11	**143**	**1.9**	127.3	"	"	8000	-	13	121	2.2
8.5	**185**	**1.5**	159.4	"	"	8000	-	10.5	150	1.85
7.4	**210**	**1.35**	183.0	"	"	8000	-	8.9	177	1.6
6.0	**250**	**1.15**	225.6	"	"	8000	-	7.2	210	1.4
5.3	**285**	**1.05**	257.8	**BS20Z-../D06LA4**	35	8000	-	6.3	240	1.25
4.5	**330**	**0.91**	300.1	"	"	8000	-	5.4	275	1.1
3.8	**385**	**0.83**	359.9	"	"	8000	-	4.6	320	1.0

P = 0.25 kW

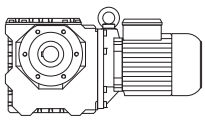

50 Hz			i	Type	m	F_{RN}	F_{RV}	60 Hz		
n_2	M_2	f_B						n_2	M_2	f_B
1/min	Nm				kg	N	N	1/min	Nm	
9.0	**177**	**3.1**	151.1	**BS30-../D06LA4**	51	9500	-	11	145	3.7
7.3	**215**	**2.5**	186.7	"	"	10000	-	8.7	181	3.0
6.3	**250**	**2.1**	216.4	"	"	10000	-	7.5	210	2.5
5.2	**300**	**1.85**	261.6	**BS30Z-../D06LA4**	54	10000	-	6.2	250	2.2
4.5	**340**	**1.7**	306.6	"	"	10000	-	5.3	290	2.0
3.8	**460**	**0.86**	359.6	"	"	10000	-	4.6	380	1.05
3.5	**440**	**1.35**	390.2	"	"	10000	-	4.2	365	1.6
3.0	**500**	**1.2**	457.3	"	"	10000	-	3.6	420	1.45
2.6	**580**	**1.05**	539.3	"	"	10000	-	3.1	490	1.2
2.1	**680**	**0.85**	651.0	"	"	10000	-	2.5	570	1.0
6.9	**255**	**2.7**	197.1	**BS40Z-../D06LA4**	68	15000	-	8.3	210	3.3
5.5	**270**	**3.3**	249.6	"	"	15000	-	6.5	230	3.9
4.7	**375**	**1.9**	287.7	"	"	15000	-	5.7	305	2.3
4.5	**330**	**3.2**	302.1	"	"	15000	-	5.4	275	3.9
3.8	**395**	**2.7**	356.8	"	"	15000	-	4.6	325	3.3
3.1	**485**	**2.0**	446.8	"	"	15000	-	3.7	405	2.4
2.6	**570**	**1.95**	520.8	"	"	15000	-	3.2	470	2.3
2.3	**630**	**1.45**	612.1	"	"	15000	-	2.7	530	1.7
1.9	**750**	**1.0**	736.5	"	"	15000	-	2.2	650	1.15
1.5	**930**	**0.8**	908.2	"	"	15000	-	1.8	780	0.95

P = 0.3 kW

50 Hz			i	Type	m	F_{RN}	F_{RV}	60 Hz		
n_2	M_2	f_B						n_2	M_2	f_B
1/min	Nm				kg	N	N	1/min	Nm	
295	**8.5**	**1.75**	4.60	**BS02-../D07LA4**	9.3	1000	-	355	7.1	2.1
250	**10**	**2.0**	5.40	"	"	1000	-	300	8.4	2.4
200	**12.3**	**2.0**	6.75	"	"	1000	-	240	10.2	2.5
164	**14.6**	**1.7**	8.25	"	"	1100	-	197	12.2	2.0
127	**18.4**	**1.35**	10.67	"	"	1250	-	152	15.4	1.6
100	**22**	**1.15**	13.50	"	"	1250	-	120	18.6	1.35
75	**28**	**0.89**	18.00	"	"	1250	-	90	23.5	1.05
100	**22**	**2.5**	13.50	**BS03-../D07LA4**	9.4	1600	-	120	18.6	3.0
72	**30**	**1.85**	19.00	"	"	1950	-	86	25	2.2
54	**36.5**	**1.5**	25.00	"	"	1950	-	65	30	1.85
41	**42.5**	**1.3**	33.00	"	"	1950	-	49.5	35	1.55
35	**52**	**1.05**	39.00	"	"	1950	-	42	43.5	1.25
27	**61**	**0.9**	50.00	"	"	1950	-	32.5	51	1.1
225	**9.9**	**2.6**	6.13	**BS04-../D07LA4**	9.8	1320	-	265	8.4	3.1
152	**14.7**	**2.0**	8.93	"	"	1500	-	182	12.2	2.5
126	**17.7**	**1.8**	10.73	"	"	1600	-	151	14.7	2.2
104	**21**	**1.55**	13.09	"	"	1760	-	124	17.7	1.85
83	**26.5**	**1.3**	16.31	"	"	1970	-	100	22	1.6
65	**33**	**1.1**	20.96	"	"	2100	-	78	27.5	1.35
56	**38.5**	**0.88**	24.25	"	"	2250	-	67	32	1.05
52	**39**	**0.97**	26.21	"	"	2250	-	62	32.5	1.15
43	**46.5**	**0.82**	31.50	"	"	2250	-	52	38.5	0.99
96	**24**	**2.8**	14.07	**BS06-../D07LA4**	14	2200	-	116	20	3.4
82	**27.5**	**2.6**	16.56	"	"	2400	-	98	23	3.1
69	**33**	**2.3**	19.82	"	"	2500	-	82	27.5	2.7
56	**40.5**	**1.9**	24.25	"	"	2600	-	67	34	2.3
52	**40**	**1.95**	26.21	"	"	3000	-	62	33.5	2.3
43	**48.5**	**1.65**	31.50	"	"	3200	-	52	40	2.0
33	**62**	**1.4**	41.29	"	"	3500	-	39.5	52	1.65
28	**73**	**1.2**	48.60	"	"	3500	-	33.5	61	1.45
23.5	**86**	**1.05**	58.15	"	"	3500	-	28	72	1.25
21.5	**90**	**0.89**	64.06	"	"	3500	-	25.5	76	1.05
19	**107**	**0.88**	71.18	"	"	3500	-	23	88	1.05
18	**106**	**0.8**	77.00	"	"	3500	-	21.5	89	0.96

BS-series worm-geared motors

Selection - worm-geared motors DHE - IE2

P = 0.3 kW

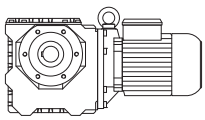

50 Hz			i	Type	m	F_{RN}	F_{RV}	60 Hz		
n_2	M_2	f_B						n_2	M_2	f_B
1/min	Nm				kg	N	N	1/min	Nm	
52	**42.5**	**3.1**	26.42	**BS10-../D07LA4**	26	3250	-	62	36	3.6
40.5	**53**	**2.5**	33.55	"	"	3550	-	48.5	44.5	3.0
34	**63**	**2.2**	39.96	"	"	3800	-	41	52	2.7
28.5	**75**	**1.95**	47.59	"	"	4050	-	34.5	62	2.3
24	**88**	**1.7**	57.12	"	"	4350	-	28.5	74	2.0
22.5	**85**	**1.75**	60.74	"	"	4550	-	27	71	2.1
19	**111**	**1.45**	71.96	"	"	5000	-	23	92	1.75
16.5	**128**	**1.15**	84.36	"	"	5300	-	19.5	108	1.4
13.5	**135**	**1.2**	103.4	"	"	5600	-	16	114	1.4
10.5	**174**	**0.94**	130.3	"	"	6000	-	12.5	146	1.1
8.9	**205**	**0.8**	152.7	"	"	6000	-	11	166	0.99
23	**93**	**3.0**	58.74	**BS20-../D07LA4**	36	5900	-	28	76	3.7
19.5	**110**	**2.7**	70.30	"	"	6300	-	23.5	91	3.3
18	**105**	**2.6**	76.18	"	"	6600	-	21.5	87	3.1
15.5	**121**	**2.2**	88.67	"	"	7000	-	18.5	102	2.6
13	**145**	**1.85**	106.3	"	"	7600	-	15.5	121	2.2
11	**171**	**1.6**	127.3	"	"	8000	-	13	145	1.85
8.5	**220**	**1.25**	159.4	"	"	8000	-	10.5	180	1.55
7.4	**255**	**1.1**	183.0	"	"	8000	-	8.9	210	1.35
6.0	**305**	**0.95**	225.6	"	"	8000	-	7.2	250	1.15
5.3	**345**	**0.86**	257.8	**BS20Z-../D07LA4**	38	8000	-	6.3	290	1.0
16.5	**133**	**3.1**	83.48	**BS30-../D07LA4**	54	6800	-	19.5	113	3.6
11	**177**	**2.9**	125.2	"	"	8700	-	13	149	3.5
9.0	**210**	**2.6**	151.1	"	"	9500	-	11	174	3.1
7.3	**255**	**2.1**	186.7	"	"	10000	-	8.7	215	2.5
6.3	**300**	**1.75**	216.4	"	"	10000	-	7.5	250	2.1
5.2	**360**	**1.55**	261.6	**BS30Z-../D07LA4**	56	10000	-	6.2	300	1.85
4.5	**410**	**1.4**	306.6	"	"	10000	-	5.3	350	1.65
3.5	**530**	**1.1**	390.2	"	"	10000	-	4.2	440	1.35
3.0	**610**	**0.98**	457.3	"	"	10000	-	3.6	500	1.2
2.6	**700**	**0.86**	539.3	"	"	10000	-	3.1	590	1.0
6.9	**305**	**2.3**	197.1	**BS40Z-../D07LA4**	70	15000	-	8.3	255	2.7
5.5	**325**	**2.8**	249.6	"	"	15000	-	6.5	275	3.3
4.7	**450**	**1.6**	287.7	"	"	15000	-	5.7	370	1.95
4.5	**400**	**2.7**	302.1	"	"	15000	-	5.4	330	3.2
3.8	**470**	**2.3**	356.8	"	"	15000	-	4.6	390	2.8
3.1	**580**	**1.7**	446.8	"	"	15000	-	3.7	485	2.0
2.6	**690**	**1.6**	520.8	"	"	15000	-	3.2	560	1.95
2.3	**750**	**1.2**	612.1	"	"	15000	-	2.7	640	1.4
1.9	**900**	**0.84**	736.5	"	"	15000	-	2.2	780	0.97

P = 0.37 kW

50 Hz			i	Type	m	F_{RN}	F_{RV}	60 Hz		
n_2	M_2	f_B						n_2	M_2	f_B
1/min	Nm				kg	N	N	1/min	Nm	
295	**10.5**	**1.45**	4.60	**BS02-../D07LA4**	9.3	1000	-	355	8.7	1.7
250	**12.4**	**1.6**	5.40	"	"	1000	-	300	10.3	1.95
200	**15.1**	**1.65**	6.75	"	"	1000	-	240	12.6	2.0
164	**18**	**1.4**	8.25	"	"	1100	-	197	15	1.65
127	**22.5**	**1.1**	10.67	"	"	1250	-	152	19	1.3
100	**27.5**	**0.91**	13.50	"	"	1250	-	120	22.5	1.1
100	**27.5**	**2.0**	13.50	**BS03-../D07LA4**	9.4	1600	-	120	22.5	2.4
72	**37**	**1.5**	19.00	"	"	1950	-	86	31	1.75
54	**45**	**1.2**	25.00	"	"	1950	-	65	37.5	1.45
41	**52**	**1.05**	33.00	"	"	1950	-	49.5	43.5	1.25
35	**64**	**0.86**	39.00	"	"	1950	-	42	53	1.05
225	**12.2**	**2.1**	6.13	**BS04-../D07LA4**	9.8	1320	-	265	10.4	2.5
152	**18.1**	**1.65**	8.93	"	"	1500	-	182	15.1	2.0
126	**21.5**	**1.5**	10.73	"	"	1600	-	151	18.2	1.75

P = 0.37 kW

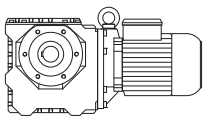

50 Hz			i	Type	m	F_{RN}	F_{RV}	60 Hz		
n_2	M_2	f_B						n_2	M_2	f_B
1/min	Nm				kg	N	N	1/min	Nm	
104	**26**	**1.25**	13.09	"	"	1760	-	124	21.5	1.55
83	**32.5**	**1.1**	16.31	"	"	1970	-	100	27	1.3
65	**41**	**0.9**	20.96	"	"	2100	-	78	34	1.1
152	**18.8**	**3.3**	8.93	**BS06-../D07LA4**	14	1710	-	182	15.7	3.9
126	**22.5**	**2.9**	10.73	"	"	1850	-	151	18.9	3.4
96	**29.5**	**2.3**	14.07	"	"	2200	-	116	24.5	2.8
82	**34**	**2.1**	16.56	"	"	2400	-	98	28.5	2.5
69	**40.5**	**1.85**	19.82	"	"	2500	-	82	34	2.2
56	**50**	**1.55**	24.25	"	"	2600	-	67	42	1.85
52	**49.5**	**1.55**	26.21	"	"	3000	-	62	41.5	1.85
43	**59**	**1.35**	31.50	"	"	3200	-	52	49.5	1.6
33	**77**	**1.1**	41.29	"	"	3500	-	39.5	64	1.35
28	**90**	**0.98**	48.60	"	"	3500	-	33.5	75	1.15
23.5	**106**	**0.86**	58.15	"	"	3500	-	28	89	1.0
63	**44.5**	**2.8**	21.61	**BS10-../D07LA4**	26	3000	-	75	37.5	3.3
52	**53**	**2.5**	26.42	"	"	3250	-	62	44	3.0
40.5	**66**	**2.0**	33.55	"	"	3550	-	48.5	55	2.5
34	**77**	**1.8**	39.96	"	"	3800	-	41	64	2.2
28.5	**92**	**1.6**	47.59	"	"	4050	-	34.5	76	1.9
24	**108**	**1.4**	57.12	"	"	4350	-	28.5	91	1.65
22.5	**105**	**1.45**	60.74	"	"	4550	-	27	87	1.7
19	**137**	**1.15**	71.96	"	"	5000	-	23	113	1.4
16.5	**158**	**0.95**	84.36	"	"	5300	-	19.5	134	1.1
13.5	**167**	**0.96**	103.4	"	"	5600	-	16	141	1.15
32.5	**82**	**3.3**	42.08	**BS20-../D07LA4**	36	5200	-	38.5	69	3.9
28	**94**	**2.9**	48.98	"	"	5500	-	33.5	79	3.4
27	**87**	**3.1**	50.44	"	"	5700	-	32.5	72	3.8
23	**115**	**2.4**	58.74	"	"	5900	-	28	94	3.0
19.5	**135**	**2.2**	70.30	"	"	6300	-	23.5	112	2.7
18	**129**	**2.1**	76.18	"	"	6600	-	21.5	108	2.5
15.5	**150**	**1.8**	88.67	"	"	7000	-	18.5	126	2.1
13	**179**	**1.5**	106.3	"	"	7600	-	15.5	150	1.8
11	**210**	**1.3**	127.3	"	"	8000	-	13	179	1.5
8.5	**270**	**1.0**	159.4	"	"	8000	-	10.5	220	1.25
7.4	**315**	**0.89**	183.0	"	"	8000	-	8.9	260	1.1
6.8	**330**	**0.85**	201.4	**BS20Z-../D07LA4**	38	8000	-	8.1	275	1.0
16.5	**164**	**2.5**	83.48	**BS30-../D07LA4**	54	6800	-	19.5	139	2.9
15	**162**	**3.0**	90.59	"	"	7700	-	18	135	3.6
13	**184**	**2.8**	106.2	"	"	8200	-	15.5	155	3.3
11	**215**	**2.4**	125.2	"	"	8700	-	13	184	2.8
9.0	**260**	**2.1**	151.1	"	"	9500	-	11	215	2.5
7.3	**315**	**1.7**	186.7	"	"	10000	-	8.7	265	2.0
6.3	**370**	**1.4**	216.4	"	"	10000	-	7.5	310	1.7
5.2	**445**	**1.25**	261.6	**BS30Z-../D07LA4**	56	10000	-	6.2	375	1.5
4.5	**510**	**1.15**	306.6	"	"	10000	-	5.3	430	1.35
3.5	**650**	**0.91**	390.2	"	"	10000	-	4.2	540	1.1
3.0	**750**	**0.8**	457.3	"	"	10000	-	3.6	620	0.97
6.9	**375**	**1.85**	197.1	**BS40Z-../D07LA4**	70	15000	-	8.3	315	2.2
5.5	**400**	**2.3**	249.6	"	"	15000	-	6.5	340	2.6
4.7	**550**	**1.3**	287.7	"	"	15000	-	5.7	455	1.55
4.5	**490**	**2.2**	302.1	"	"	15000	-	5.4	410	2.6
3.8	**580**	**1.85**	356.8	"	"	15000	-	4.6	480	2.3
3.1	**710**	**1.4**	446.8	"	"	15000	-	3.7	600	1.65
2.6	**850**	**1.3**	520.8	"	"	15000	-	3.2	690	1.6
2.3	**930**	**0.98**	612.1	"	"	15000	-	2.7	790	1.15

P = 0.55 kW

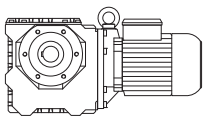

50 Hz			i	Type	m	F_{RN}	F_{RV}	60 Hz		
n_2	M_2	f_B						n_2	M_2	f_B
1/min	Nm				kg	N	N	1/min	Nm	
305	**15.1**	**2.6**	4.60	**BS03-../D08MA4**	10	1070	-	370	12.4	3.2
235	**19.6**	**2.2**	6.00	"	"	1170	-	280	16.5	2.7
175	**25.5**	**1.9**	8.00	"	"	1320	-	210	21.5	2.2
140	**31.5**	**1.65**	10.00	"	"	1450	-	168	26	2.0
104	**39**	**1.4**	13.50	"	"	1600	-	125	32.5	1.7
74	**53**	**1.05**	19.00	"	"	1950	-	89	44.5	1.25
56	**64**	**0.86**	25.00	"	"	1950	-	68	53	1.05
210	**20**	**2.8**	6.67	**BS06-../D08MA4**	16	1550	-	255	16.6	3.4
157	**27**	**2.3**	8.93	"	"	1710	-	189	22.5	2.8
131	**32**	**2.0**	10.73	"	"	1850	-	157	27	2.4
100	**42.5**	**1.6**	14.07	"	"	2200	-	120	35	1.95
85	**49**	**1.45**	16.56	"	"	2400	-	102	41	1.75
71	**59**	**1.25**	19.82	"	"	2500	-	85	49	1.55
58	**72**	**1.05**	24.25	"	"	2600	-	70	60	1.3
54	**71**	**1.1**	26.21	"	"	3000	-	65	58	1.35
44.5	**86**	**0.93**	31.50	"	"	3200	-	54	71	1.15
113	**37**	**2.9**	12.49	**BS10-../D08MA4**	27	2400	-	135	31	3.5
83	**50**	**2.4**	16.92	"	"	2700	-	100	42	2.9
65	**64**	**1.95**	21.61	"	"	3000	-	78	53	2.4
53	**77**	**1.7**	26.42	"	"	3250	-	64	64	2.0
46	**78**	**1.65**	30.63	"	"	3550	-	55	65	2.0
42	**95**	**1.4**	33.55	"	"	3550	-	51	78	1.75
35.5	**110**	**1.25**	39.96	"	"	3800	-	42.5	92	1.5
29.5	**133**	**1.1**	47.59	"	"	4050	-	35.5	110	1.3
25	**155**	**0.97**	57.12	"	"	4350	-	29.5	131	1.15
23.5	**149**	**1.0**	60.74	"	"	4550	-	28	125	1.2
19.5	**199**	**0.8**	71.96	"	"	5000	-	23.5	165	0.97
51	**80**	**3.1**	27.86	**BS20-../D08MA4**	37	4450	-	61	67	3.7
46	**82**	**3.0**	30.63	"	"	4750	-	55	68	3.7
43	**94**	**2.9**	32.87	"	"	4750	-	52	77	3.5
35	**108**	**2.4**	40.25	"	"	5300	-	42	90	2.9
33.5	**119**	**2.3**	42.08	"	"	5200	-	40	99	2.7
29	**135**	**2.0**	48.98	"	"	5500	-	34.5	114	2.4
28	**125**	**2.2**	50.44	"	"	5700	-	33.5	105	2.6
24	**164**	**1.7**	58.74	"	"	5900	-	29	135	2.1
20	**196**	**1.55**	70.30	"	"	6300	-	24	164	1.85
18.5	**187**	**1.45**	76.18	"	"	6600	-	22.5	154	1.75
16	**215**	**1.25**	88.67	"	"	7000	-	19	182	1.5
13.5	**255**	**1.05**	106.3	"	"	7600	-	16	215	1.25
11	**315**	**0.86**	127.3	"	"	8000	-	13.5	255	1.05
28	**144**	**3.1**	50.04	**BS30-../D08MA4**	55	5900	-	34	118	3.8
24	**168**	**2.7**	58.64	"	"	6900	-	29	139	3.3
20	**183**	**2.6**	71.17	"	"	7000	-	24	153	3.1
17	**235**	**1.75**	83.48	"	"	6800	-	20.5	197	2.1
15.5	**230**	**2.1**	90.59	"	"	7700	-	19	190	2.6
13.5	**260**	**1.95**	106.2	"	"	8200	-	16	220	2.3
11.5	**310**	**1.7**	125.2	"	"	8700	-	13.5	260	2.0
9.3	**375**	**1.45**	151.1	"	"	9500	-	11.5	305	1.75
7.5	**460**	**1.2**	186.7	"	"	10000	-	9.0	385	1.4
6.5	**530**	**0.98**	216.4	"	"	10000	-	7.8	440	1.2
5.4	**640**	**0.88**	261.6	**BS30Z-../D08MA4**	58	10000	-	6.5	530	1.05
11.5	**305**	**3.2**	126.0	**BS40-../D08MA4**	68	14900	-	13.5	260	3.8
9.5	**355**	**2.7**	148.1	"	"	15000	-	11.5	295	3.3
7.9	**430**	**1.9**	178.2	"	"	15000	-	9.5	355	2.3
6.4	**510**	**1.55**	219.7	"	"	15000	-	7.7	425	1.85
5.7	**580**	**1.55**	249.6	**BS40Z-../D08MA4**	71	15000	-	6.8	485	1.85
4.9	**790**	**0.91**	287.7	"	"	15000	-	5.9	650	1.1
4.7	**700**	**1.55**	302.1	"	"	15000	-	5.6	590	1.8
4.0	**820**	**1.3**	356.8	"	"	15000	-	4.8	680	1.6
3.2	**1030**	**0.96**	446.8	"	"	15000	-	3.8	870	1.15
2.7	**1220**	**0.9**	520.8	"	"	15000	-	3.3	1000	1.1

P = 0.75 kW

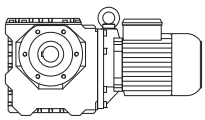

50 Hz			i	Type	m	F_{RN}	F_{RV}	60 Hz		
n_2	M_2	f_B						n_2	M_2	f_B
1/min	Nm				kg	N	N	1/min	Nm	
310	**20**	**2.0**	4.60	**BS03-../DHE08XA4**	13	1070	-	375	16.8	2.4
240	**26**	**1.7**	6.00	"	"	1170	-	285	22	2.0
178	**34.5**	**1.4**	8.00	"	"	1320	-	215	28.5	1.7
142	**42**	**1.25**	10.00	"	"	1450	-	171	35	1.5
106	**52**	**1.05**	13.50	"	"	1600	-	127	43.5	1.25
215	**26.5**	**2.1**	6.67	**BS06-../DHE08XA4**	18	1550	-	260	22	2.5
160	**36**	**1.7**	8.93	"	"	1710	-	192	30	2.1
133	**43.5**	**1.5**	10.73	"	"	1850	-	160	36	1.8
101	**57**	**1.2**	14.07	"	"	2200	-	122	47.5	1.45
86	**66**	**1.1**	16.56	"	"	2400	-	104	55	1.3
72	**79**	**0.95**	19.82	"	"	2500	-	87	65	1.15
55	**95**	**0.81**	26.21	"	"	3000	-	66	79	0.97
114	**50**	**2.2**	12.49	**BS10-../DHE08XA4**	30	2400	-	137	41.5	2.6
84	**68**	**1.75**	16.92	"	"	2700	-	102	56	2.1
66	**86**	**1.45**	21.61	"	"	3000	-	80	71	1.75
54	**103**	**1.25**	26.42	"	"	3250	-	65	85	1.55
46.5	**106**	**1.25**	30.63	"	"	3550	-	56	88	1.5
42.5	**128**	**1.05**	33.55	"	"	3550	-	51	106	1.25
36	**149**	**0.94**	39.96	"	"	3800	-	43	124	1.15
30	**179**	**0.81**	47.59	"	"	4050	-	36	149	0.97
84	**69**	**3.2**	16.92	**BS20-../DHE08XA4**	40	3700	-	102	56	3.9
64	**90**	**2.6**	22.23	"	"	4100	-	77	75	3.1
51	**109**	**2.3**	27.86	"	"	4450	-	62	90	2.8
46.5	**110**	**2.3**	30.63	"	"	4750	-	56	92	2.7
43.5	**126**	**2.1**	32.87	"	"	4750	-	53	104	2.6
35.5	**145**	**1.8**	40.25	"	"	5300	-	42.5	121	2.1
34	**160**	**1.7**	42.08	"	"	5200	-	41	132	2.0
28.5	**168**	**1.6**	50.44	"	"	5700	-	34	141	1.9
24.5	**215**	**1.3**	58.74	"	"	5900	-	29.5	182	1.55
20.5	**260**	**1.15**	70.30	"	"	6300	-	24.5	215	1.4
19	**245**	**1.1**	76.18	"	"	6600	-	22.5	210	1.3
16.5	**285**	**0.95**	88.67	"	"	7000	-	19.5	240	1.15
42.5	**138**	**3.0**	33.55	**BS30-../DHE08XA4**	57	5200	-	51	115	3.7
37.5	**143**	**2.9**	37.92	"	"	5500	-	45.5	118	3.6
36.5	**158**	**2.7**	39.31	"	"	5500	-	44	131	3.3
28.5	**193**	**2.3**	50.04	"	"	5900	-	34.5	159	2.8
24.5	**225**	**2.0**	58.64	"	"	6900	-	29.5	186	2.5
20	**250**	**1.9**	71.17	"	"	7000	-	24.5	200	2.4
17.5	**315**	**1.3**	83.48	"	"	6800	-	20.5	265	1.55
16	**305**	**1.6**	90.59	"	"	7700	-	19	260	1.9
13.5	**360**	**1.4**	106.2	"	"	8200	-	16.5	295	1.75
11.5	**420**	**1.25**	125.2	"	"	8700	-	14	345	1.5
9.4	**510**	**1.05**	151.1	"	"	9500	-	11.5	415	1.3
7.7	**610**	**0.89**	186.7	"	"	10000	-	9.2	510	1.05
20.5	**265**	**2.8**	69.60	**BS40-../DHE08XA4**	70	11800	-	25	220	3.4
16.5	**295**	**3.1**	86.33	"	"	12900	-	20	245	3.7
13.5	**355**	**2.7**	108.1	"	"	14000	-	16	295	3.2
11.5	**415**	**2.4**	126.0	"	"	14900	-	14	340	2.9
9.6	**480**	**2.0**	148.1	"	"	15000	-	12	385	2.5
8.0	**580**	**1.4**	178.2	"	"	15000	-	9.6	480	1.7
6.5	**690**	**1.15**	219.7	"	"	15000	-	7.8	570	1.4
5.7	**790**	**1.15**	249.6	**BS40Z-../DHE08XA4**	74	15000	-	6.9	650	1.4
4.8	**940**	**1.15**	302.1	"	"	15000	-	5.7	790	1.35
4.0	**1120**	**0.96**	356.8	"	"	15000	-	4.8	940	1.15

P = 1.1 kW

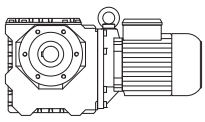

50 Hz			i	Type	m	F_{RN}	F_{RV}	60 Hz		
n_2	M_2	f_B						n_2	M_2	f_B
1/min	Nm				kg	N	N	1/min	Nm	
116	**72**	**1.5**	12.49	**BS10-../DHE09LA4**	36	2400	-	140	60	1.8
86	**97**	**1.25**	16.92	"	"	2700	-	103	81	1.5
67	**125**	**1.0**	21.61	"	"	3000	-	81	103	1.2
55	**148**	**0.88**	26.42	"	"	3250	-	66	124	1.05
47.5	**152**	**0.86**	30.63	"	"	3550	-	57	127	1.0
113	**75**	**2.7**	12.77	**BS20-../DHE09LA4**	46	3350	-	137	62	3.2
86	**98**	**2.2**	16.92	"	"	3700	-	103	82	2.7
65	**130**	**1.75**	22.23	"	"	4100	-	79	107	2.1
52	**157**	**1.6**	27.86	"	"	4450	-	63	130	1.9
47.5	**159**	**1.55**	30.63	"	"	4750	-	57	132	1.9
44	**183**	**1.5**	32.87	"	"	4750	-	53	152	1.8
36	**210**	**1.25**	40.25	"	"	5300	-	43.5	173	1.5
34.5	**230**	**1.15**	42.08	"	"	5200	-	41.5	192	1.4
29	**240**	**1.15**	50.44	"	"	5700	-	34.5	200	1.35
25	**315**	**0.89**	58.74	"	"	5900	-	30	260	1.1
69	**126**	**3.0**	20.94	**BS30-../DHE09LA4**	64	4300	-	84	103	3.7
54	**161**	**2.5**	27.07	"	"	4750	-	65	134	3.0
47.5	**165**	**2.4**	30.63	"	"	5000	-	57	138	2.9
43	**200**	**2.1**	33.55	"	"	5200	-	52	165	2.5
38	**205**	**2.0**	37.92	"	"	5500	-	46	171	2.5
37	**225**	**1.9**	39.31	"	"	5500	-	44.5	191	2.3
29	**275**	**1.65**	50.04	"	"	5900	-	35	230	1.95
25	**320**	**1.45**	58.64	"	"	6900	-	30	265	1.75
20.5	**355**	**1.35**	71.17	"	"	7000	-	24.5	300	1.6
17.5	**460**	**0.89**	83.48	"	"	6800	-	21	385	1.05
16	**450**	**1.1**	90.59	"	"	7700	-	19.5	370	1.3
14	**510**	**1.0**	106.2	"	"	8200	-	16.5	430	1.2
12	**590**	**0.88**	125.2	"	"	8700	-	14	510	1.0
30.5	**265**	**3.1**	47.69	**BS40-../DHE09LA4**	77	9600	-	36.5	220	3.8
24	**310**	**2.8**	60.38	"	"	11200	-	29	255	3.4
21	**385**	**1.95**	69.60	"	"	11800	-	25	320	2.3
20	**365**	**2.4**	73.09	"	"	12100	-	24	305	2.9
17	**425**	**2.1**	86.33	"	"	12900	-	20.5	350	2.6
13.5	**520**	**1.85**	108.1	"	"	14000	-	16.5	425	2.2
11.5	**610**	**1.6**	126.0	"	"	14900	-	14	500	1.95
9.8	**690**	**1.4**	148.1	"	"	15000	-	12	560	1.75
8.1	**840**	**0.98**	178.2	"	"	15000	-	9.8	690	1.2

P = 1.5 kW

50 Hz			i	Type	m	F_{RN}	F_{RV}	60 Hz		
n_2	M_2	f_B						n_2	M_2	f_B
1/min	Nm				kg	N	N	1/min	Nm	
116	**98**	**1.1**	12.49	**BS10-../DHE09XA4**	40	2400	-	140	81	1.35
86	**133**	**0.9**	16.92	"	"	2700	-	103	111	1.1
113	**102**	**1.95**	12.77	**BS20-../DHE09XA4**	50	3350	-	137	84	2.4
86	**134**	**1.65**	16.92	"	"	3700	-	103	112	1.95
65	**178**	**1.3**	22.23	"	"	4100	-	79	146	1.6
52	**210**	**1.2**	27.86	"	"	4450	-	63	177	1.4
47.5	**215**	**1.15**	30.63	"	"	4750	-	57	180	1.4
44	**250**	**1.1**	32.87	"	"	4750	-	53	205	1.3
36	**285**	**0.91**	40.25	"	"	5300	-	43.5	235	1.1
34.5	**315**	**0.86**	42.08	"	"	5200	-	41.5	260	1.05
29	**330**	**0.82**	50.44	"	"	5700	-	34.5	275	0.98
109	**109**	**3.0**	13.29	**BS30-../DHE09XA4**	68	3600	-	131	90	3.7
86	**138**	**2.6**	16.92	"	"	3950	-	103	115	3.1
69	**172**	**2.2**	20.94	"	"	4300	-	84	141	2.7
54	**220**	**1.8**	27.07	"	"	4750	-	65	182	2.2
47.5	**225**	**1.8**	30.63	"	"	5000	-	57	188	2.1
43	**270**	**1.55**	33.55	"	"	5200	-	52	225	1.85

P = 1.5 kW

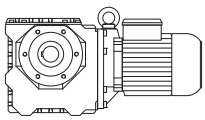

50 Hz			i	Type	m	F_{RN}	F_{RV}	60 Hz		
n_2	M_2	f_B						n_2	M_2	f_B
1/min	Nm				kg	N	N	1/min	Nm	
38	**280**	**1.5**	37.92	**BS30-../DHE09XA4**	"	5500	-	46	230	1.85
37	**310**	**1.4**	39.31	"	"	5500	-	44.5	260	1.65
29	**380**	**1.2**	50.04	"	"	5900	-	35	315	1.45
25	**440**	**1.05**	58.64	"	"	6900	-	30	365	1.25
20.5	**485**	**0.99**	71.17	"	"	7000	-	24.5	405	1.2
16	**610**	**0.8**	90.59	"	"	7700	-	19.5	500	0.98
43.5	**260**	**3.0**	33.35	**BS40-../DHE09XA4**	81	8300	-	53	215	3.6
38	**275**	**2.8**	38.13	"	"	9400	-	46	225	3.5
36	**310**	**2.6**	40.37	"	"	9000	-	43.5	260	3.1
30.5	**365**	**2.3**	47.69	"	"	9600	-	36.5	305	2.7
24	**420**	**2.0**	60.38	"	"	11200	-	29	350	2.5
21	**520**	**1.45**	69.60	"	"	11800	-	25	440	1.7
20	**500**	**1.75**	73.09	"	"	12100	-	24	415	2.1
17	**580**	**1.55**	86.33	"	"	12900	-	20.5	480	1.9
13.5	**710**	**1.35**	108.1	"	"	14000	-	16.5	580	1.65
11.5	**830**	**1.2**	126.0	"	"	14900	-	14	680	1.45
9.8	**950**	**1.0**	148.1	"	"	15000	-	12	770	1.25

P = 2.2 kW

50 Hz			i	Type	m	F_{RN}	F_{RV}	60 Hz		
n_2	M_2	f_B						n_2	M_2	f_B
1/min	Nm				kg	N	N	1/min	Nm	
113	**150**	**1.35**	12.77	**BS20-../DHE09XA4C**	53	3350	-	137	124	1.6
86	**197**	**1.1**	16.92	"	"	3700	-	103	165	1.35
65	**260**	**0.88**	22.23	"	"	4100	-	79	215	1.05
109	**159**	**2.1**	13.29	**BS30-../DHE09XA4C**	71	3600	-	131	133	2.5
86	**200**	**1.8**	16.92	"	"	3950	-	103	169	2.1
69	**250**	**1.5**	20.94	"	"	4300	-	84	205	1.85
54	**320**	**1.25**	27.07	"	"	4750	-	65	265	1.5
47.5	**330**	**1.2**	30.63	"	"	5000	-	57	275	1.45
43	**400**	**1.05**	33.55	"	"	5200	-	52	330	1.25
38	**410**	**1.0**	37.92	"	"	5500	-	46	340	1.25
37	**455**	**0.95**	39.31	"	"	5500	-	44.5	380	1.15
29	**550**	**0.82**	50.04	"	"	5900	-	35	460	0.98
86	**205**	**3.3**	16.92	**BS40-../DHE09XA4C**	84	6400	-	103	173	3.9
69	**245**	**2.9**	21.06	"	"	6900	-	83	205	3.5
56	**305**	**2.4**	26.18	"	"	7500	-	67	255	2.9
47.5	**325**	**2.3**	30.63	"	"	8700	-	57	270	2.8
43.5	**385**	**2.0**	33.35	"	"	8300	-	53	315	2.5
38	**400**	**1.95**	38.13	"	"	9400	-	46	330	2.4
36	**460**	**1.75**	40.37	"	"	9000	-	43.5	380	2.1
30.5	**530**	**1.55**	47.69	"	"	9600	-	36.5	445	1.85
24	**620**	**1.4**	60.38	"	"	11200	-	29	510	1.7
21	**770**	**0.97**	69.60	"	"	11800	-	25	640	1.15
20	**730**	**1.2**	73.09	"	"	12100	-	24	610	1.45
17	**850**	**1.05**	86.33	"	"	12900	-	20.5	700	1.3
13.5	**1040**	**0.91**	108.1	"	"	14000	-	16.5	850	1.1
11.5	**1220**	**0.8**	126.0	"	"	14900	-	14	1000	0.98

BS-series worm-geared motors

Selection - worm-geared motors DHE - IE2

P = 3 kW

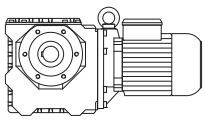

50 Hz			i	Type	m	F_{RN}	F_{RV}	60 Hz		
n_2	M_2	f_B						n_2	M_2	f_B
1/min	Nm				kg	N	N	1/min	Nm	
109	**215**	**1.55**	13.29	**BS30-../DHE11MA4**	77	3600	-	131	181	1.85
86	**275**	**1.3**	16.92	"	"	3950	-	103	230	1.55
69	**340**	**1.1**	20.94	"	"	4300	-	84	280	1.35
54	**440**	**0.91**	27.07	"	"	4750	-	65	365	1.1
47.5	**450**	**0.89**	30.63	"	"	5000	-	57	375	1.05
111	**215**	**2.9**	13.03	**BS40-../DHE11MA4**	95	5800	-	134	181	3.4
86	**280**	**2.4**	16.92	"	"	6400	-	103	235	2.9
69	**340**	**2.1**	21.06	"	"	6900	-	83	280	2.5
56	**415**	**1.8**	26.18	"	"	7500	-	67	350	2.1
47.5	**445**	**1.7**	30.63	"	"	8700	-	57	370	2.0
43.5	**520**	**1.5**	33.35	"	"	8300	-	53	430	1.8
38	**550**	**1.4**	38.13	"	"	9400	-	46	450	1.75
36	**620**	**1.3**	40.37	"	"	9000	-	43.5	520	1.55
30.5	**730**	**1.15**	47.69	"	"	9600	-	36.5	610	1.35
24	**840**	**1.0**	60.38	"	"	11200	-	29	700	1.25
20	**1000**	**0.88**	73.09	"	"	12100	-	24	830	1.05

P = 4 kW

50 Hz			i	Type	m	F_{RN}	F_{RV}	60 Hz		
n_2	M_2	f_B						n_2	M_2	f_B
1/min	Nm				kg	N	N	1/min	Nm	
109	**290**	**1.15**	13.29	**BS30-../DHE11LA4**	89	3600	-	131	240	1.4
86	**365**	**0.99**	16.92	"	"	3950	-	103	305	1.2
69	**455**	**0.84**	20.94	"	"	4300	-	84	375	1.0
111	**290**	**2.1**	13.03	**BS40-../DHE11LA4**	107	5800	-	134	240	2.6
86	**375**	**1.8**	16.92	"	"	6400	-	103	315	2.1
69	**450**	**1.6**	21.06	"	"	6900	-	83	375	1.9
56	**550**	**1.35**	26.18	"	"	7500	-	67	465	1.6
47.5	**590**	**1.25**	30.63	"	"	8700	-	57	495	1.5
43.5	**700**	**1.1**	33.35	"	"	8300	-	53	570	1.35
38	**730**	**1.05**	38.13	"	"	9400	-	46	600	1.3
36	**830**	**0.96**	40.37	"	"	9000	-	43.5	690	1.15
30.5	**970**	**0.86**	47.69	"	"	9600	-	36.5	810	1.0

P = 5.5 kW

50 Hz			i	Type	m	F_{RN}	F_{RV}	60 Hz		
n_2	M_2	f_B						n_2	M_2	f_B
1/min	Nm				kg	N	N	1/min	Nm	
110	**395**	**0.84**	13.29	**BS30-../DHE11LA4C**	93	3600	-	133	325	1.0
113	**395**	**1.55**	13.03	**BS40-../DHE11LA4C**	111	5800	-	136	325	1.9
87	**510**	**1.3**	16.92	"	"	6400	-	105	425	1.6
70	**610**	**1.15**	21.06	"	"	6900	-	84	510	1.4
56	**760**	**0.97**	26.18	"	"	7500	-	68	630	1.15
48	**800**	**0.94**	30.63	"	"	8700	-	58	670	1.1
44	**950**	**0.82**	33.35	"	"	8300	-	53	790	0.99

M = 62 .. 110 Nm

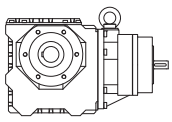

50 Hz			i	Type	F_{RN}	F_{RV}	permissible input speed [1/min]	
n_2	M_2	M_1					for mounting position	
(4 pole)	f_B=1,0						H1,H2,H3,H4,H5,B5,V1	H6,V3,V6
1/min	Nm	Nm			N	N	B3,B6,B7,B8,V5	
3,3	110	0,26	418	**BS06-..-SN**	3500		3600	1800
3,9	110	0,31	358,9	"	3500		"	"
4,4	106	0,34	315,3	"	3500		"	"
5,6	99	0,39	252	"	3500		"	"
6,4	98	0,45	220	"	3500		"	"
8	98	0,6	174	"	3500		"	"
8,2	88	0,5	171	"	3500		"	"
10	106	0,7	146,8	"	3500		"	"
10	98	0,7	142,2	"	3500		"	"
11	104	0,8	129	"	3500		"	"
12	94	0,8	118,8	"	3500		"	"
14	100	1	103,1	"	3500		"	"
16	98	1,1	90	"	3500		"	"
18	85	1,1	77	"	3500		"	"
20	94	1,3	71,18	"	3500		"	"
22	80	1,2	64,06	"	3500		"	"
24	91	1,6	58,15	"	3500		"	"
29	88	1,8	48,6	"	3500		"	"
34	86	2,1	41,29	"	3500		"	"
44	80	2,5	31,5	"	3200		"	"
53	77	2,9	26,21	"	3000		"	"
58	77	3,2	24,25	"	2600		"	"
71	75	3,8	19,82	"	2500		"	"
85	72	4,3	16,56	"	2400		"	"
100	68	4,8	14,07	"	2200		"	"
130	65	6,1	10,73	"	1850		"	"
157	62	6,9	8,93	"	1710		"	"

M = 108 .. 180 Nm

50 Hz			i	Type	F_{RN}	F_{RV}	permissible input speed [1/min]	
n_2	M_2	M_1					for mounting position	
(4 pole)	f_B=1,0						H1,H2,H3,H4,H5,B5,V1	H6,V3,V6
1/min	Nm	Nm			N	N	B3,B6,B7,B8,V5	
6,5	180	0,8	216,6	**BS10-..-SN**	6000		3600	1800
7,4	170	0,9	188,6	"	6000		"	"
9,2	165	1,1	152,7	"	6000		"	"
11	164	1,3	130,3	"	6000		"	"
12	121	1	119,6	"	6000		"	"
14	160	1,5	103,4	"	5600		"	"
17	150	1,8	84,36	"	5300		"	"
19	160	2,2	71,96	"	5000		"	"
23	150	2,5	60,74	"	4550		"	"
25	150	2,6	57,12	"	4350		"	"
29	145	3	47,59	"	4050		"	"
35	140	3,5	39,96	"	3800		"	"
42	135	4	33,55	"	3550		"	"
46	130	4,2	30,63	"	3550		"	"
53	130	4,9	26,42	"	3250		"	"
65	125	5,8	21,61	"	3000		"	"
83	120	7,1	16,92	"	2700		"	"
112	108	8,6	12,49	"	2400		"	"

BS-series worm-geared motors

Selection - worm gearbox with SN input

M = 200 .. 300 Nm

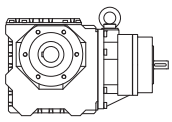

50 Hz			i	Type	F_{RN}	F_{RV}	permissible input speed [1/min]	
n_2	M_2	M_1					for mounting position	
(4 pole)	f_B=1,0						H1,H2,H3,H4,H5,B5,V1	H6,V3,V6
1/min	Nm	Nm			N	N	B3,B6,B7,B8,V5	
6,2	290	1,3	225,6	**BS20-..-SN**	8000		3600	1800
7,7	280	1,5	183	"	8000		"	"
8,8	275	1,7	159,4	"	8000		"	"
11	270	2,1	127,3	"	8000		"	"
13	270	2,5	106,3	"	7600		"	"
14	250	2,5	101,1	"	7100		"	"
16	270	3	88,67	"	7000		"	"
18	270	3,5	76,18	"	6600		"	"
20	300	4,3	70,3	"	6300		"	"
24	280	4,8	58,74	"	5900		"	"
28	270	5,4	50,44	"	5700		"	"
29	270	5,5	48,98	"	5500		"	"
33	270	6,4	42,08	"	5200		"	"
35	260	6,5	40,25	"	5300		"	"
43	270	8,2	32,87	"	4750		"	"
46	250	8,2	30,63	"	4750		"	"
50	250	9	27,86	"	4450		"	"
63	230	10	22,23	"	4100		"	"
83	220	13	16,92	"	3700		"	"
110	200	16	12,77	"	3350		"	"

9

M = 332 .. 540 Nm

50 Hz			i	Type	F_{RN}	F_{RV}	permissible input speed [1/min]	
n_2	M_2	M_1					for mounting position	
(4 pole)	f_B=1,0						H1,H2,H3,H4,H5,B5,V1	H6,V3,V6
1/min	Nm	Nm			N	N	B3,B6,B7,B8,V5	
6,5	520	2,4	216,4	**BS30-..-SN**	10000		3600	1800
7,5	540	2,9	186,7	"	10000		"	"
9,3	540	3,6	151,1	"	9500		"	"
11	520	4,2	125,2	"	8700		"	"
13	510	4,8	106,2	"	8200		"	"
15	490	5,4	90,59	"	7700		"	"
17	405	4,9	83,48	"	6800		"	"
20	480	6,7	71,17	"	7000		"	"
24	460	7,8	58,64	"	6900		"	"
28	450	9	50,04	"	5900		"	"
36	430	11	39,31	"	5500		"	"
37	420	11	37,92	"	5500		"	"
42	420	13	33,55	"	5200		"	"
46	400	13	30,63	"	5000		"	"
52	400	15	27,07	"	4750		"	"
67	380	18	20,94	"	4300		"	"
83	360	21	16,92	"	3950		"	"
105	332	25	13,29	"	3600		"	"

M = 614 .. 980 Nm

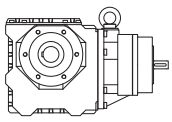

50 Hz			i	Type	F_{RN}	F_{RV}	permissible input speed [1/min] for mounting position	
n_2 (4 pole) 1/min	M_2 f_B=1,0 Nm	M_1 Nm			N	N	H1,H2,H3,H4,H5,B5,V1 B3,B6,B7,B8,V5	H6,V3,V6
6,4	790	3,6	219,7	**BS40-..-SN**	15000		3600	1800
7,9	810	4,5	178,2	"	15000		"	"
9,5	960	6,5	148,1	"	15000		"	"
11	980	7,8	126	"	14900		"	"
13	950	8,8	108,1	"	14000		"	"
16	900	10	86,33	"	12900		"	"
19	880	12	73,09	"	12100		"	"
20	740	11	69,6	"	11800		"	"
23	860	14	60,38	"	11200		"	"
29	830	17	47,69	"	9600		"	"
35	800	20	40,37	"	9000		"	"
37	780	20	38,13	"	9400		"	"
42	780	23	33,35	"	8300		"	"
46	750	24	30,63	"	8700		"	"
53	740	28	26,18	"	7500		"	"
66	710	34	21,06	"	6900		"	"
83	670	40	16,92	"	6400		"	"
107	614	47	13,03	"	5850		"	"

BS-series worm-geared motors

Selection helical-geared geared box with C-coupling

M = 108 .. 190 Nm

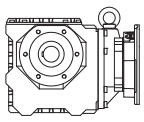

50 Hz		i	Type	F_{RN}	F_{RV}	max. permissible input torque M1 [Nm] *													
n_2	M_2					1	3	3	5	10	20	26	55	105	145	210	290	385	575
(4 pole)	f_B=1,0					IEC Motor Size *													
1/min	Nm			N	N	56	63	71	80	90	100	112	132	160	180	200	225	250	280
6,5	180	216,6	**BS10-..-C/IEC**		6000		■	■	■										
7,4	170	188,6	"		6000		■	■	■	■	■	■							
9,2	165	152,7	"		6000		■	■	■	■	■	■							
11	164	130,3	"		6000		■	■	■	■	■	■							
12	121	119,6	"		6000		■	■	■										
14	160	103,4	"		5600		■	■	■	■	■	■							
17	150	84,36	"		5300		■	■	■	■	■	■							
19	160	71,96	"		5000		■	■	■	■	■	■							
23	150	60,74	"		4550		■	■	■	■	■	■							
25	150	57,12	"		4350		■	■	■	■	■	■							
29	145	47,59	"		4050		■	■	■	■	■	■							
35	140	39,96	"		3800		■	■	■	■	■	■							
42	135	33,55	"		3550		■	■	■	■	■	■							
46	130	30,63	"		3550					■	■	■							
53	130	26,42	"		3250		■	■	■	■	■	■							
65	125	21,61	"		3000		■	■	■	■	■	■							
83	120	16,92	"		2700					■	■	■							
112	108	12,49	"		2400					■	■	■							
1,5	158	905,6	**BS10Z-..-C/IEC**		6000		■	■	■	■									
1,8	180	788,7	"		6000		■	■	■	■									
2,2	190	638,7	"		6000		■	■	■	■									
2,6	190	544,8	"		6000		■	■	■	■									
3,2	190	432,4	"		6000		■	■	■	■									
3,9	190	360,3	"		6000		■	■	■	■									
4,6	190	302,5	"		6000		■	■	■	■									
5,5	180	254	"		6000		■	■	■	■									
7	148	200	"		6000		■	■	■	■									

9

M = 200 .. 365 Nm

50 Hz		i	Type	F_{RN}	F_{RV}	max. permissible input torque M1 [Nm] *													
n_2	M_2					1	3	3	5	10	20	26	55	105	145	210	290	385	575
(4 pole)	f_B=1,0					IEC Motor Size *													
1/min	Nm			N	N	56	63	71	80	90	100	112	132	160	180	200	225	250	280
6,2	290	225,6	**BS20-..-C/IEC**		8000		■	■	■	■	■	■							
7,7	280	183	"		8000		■	■	■	■	■	■							
8,8	275	159,4	"		8000		■	■	■	■	■	■							
11	270	127,3	"		8000		■	■	■	■	■	■							
13	270	106,3	"		7600		■	■	■	■	■	■							
14	250	101,1	"		7100		■	■	■	■	■	■							
16	270	88,67	"		7000		■	■	■	■	■	■							
18	270	76,18	"		6600		■	■	■	■	■	■							
20	300	70,3	"		6300		■	■	■	■	■	■							
24	280	58,74	"		5900		■	■	■	■	■	■							
28	270	50,44	"		5700		■	■	■	■	■	■							
29	270	48,98	"		5500		■	■	■	■	■	■							
33	270	42,08	"		5200		■	■	■	■	■	■							
35	260	40,25	"		5300					■	■	■							
43	270	32,87	"		4750		■	■	■	■	■	■							
46	250	30,63	"		4750					■	■	■							
50	250	27,86	"		4450		■	■	■	■	■	■							
63	230	22,23	"		4100					■	■	■							
83	220	16,92	"		3700					■	■	■							
110	200	12,77	"		3350					■	■	■							
1,8	310	763,4	**BS20Z-..-C/IEC**		8000		■	■	■	■									
2,3	330	619,2	"		8000		■	■	■	■									
2,6	365	539,7	"		8000		■	■	■	■									
3,2	330	430,8	"		8000		■	■	■	■									
3,9	320	359,9	"		8000		■	■	■	■									
4,7	300	300,1	"		8000		■	■	■	■									
5,4	295	257,8	"		8000		■	■	■	■									
7	280	201,4	"		8000		■	■	■	■									

* acc. to DIN/EN 50347:2001
For speeds above 1500 1/min, refer to manufacturer

M = 332 .. 600 Nm

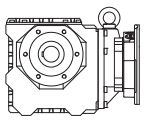

50 Hz		i	Type	F_{RN}	F_{RV}	max. permissible input torque M1 [Nm] *													
n_2	M_2					1	3	3	5	10	20	26	55	105	145	210	290	385	575
(4 pole)	f_B=1,0					IEC Motor Size *													
1/min	Nm			N	N	56	63	71	80	90	100	112	132	160	180	200	225	250	280
6,5	520	216,4	**BS30-..-C/IEC**		10000		■	■	■	■	■	■							
7,5	540	186,7	"		10000		■	■	■	■	■	■							
9,3	540	151,1	"		9500		■	■	■	■	■	■							
11	520	125,2	"		8700		■	■	■	■	■	■							
13	510	106,2	"		8200		■	■	■	■	■	■							
15	490	90,59	"		7700		■	■	■	■	■	■							
17	405	83,48	"		6800		■	■	■	■	■	■							
20	480	71,17	"		7000		■	■	■	■	■	■	■						
24	460	58,64	"		6900		■	■	■	■	■	■							
28	450	50,04	"		5900		■	■	■	■	■	■							
36	430	39,31	"		5500		■	■	■	■	■	■	■						
37	420	37,92	"		5500					■	■	■	■						
42	420	33,55	"		5200		■	■	■	■	■	■	■						
46	400	30,63	"		5000					■	■	■	■						
52	400	27,07	"		4750					■	■	■	■						
67	380	20,94	"		4300					■	■	■	■						
83	360	16,92	"		3950					■	■	■	■						
105	332	13,29	"		3600					■	■	■	■						
1,5	445	932	**BS30Z-..-C/IEC**		10000		■	■	■	■	■	■							
1,7	475	804,1	"		10000		■	■	■	■	■	■							
2,2	570	651	"		10000		■	■	■	■	■	■							
2,6	600	539,3	"		10000		■	■	■	■	■	■							
3,1	600	457,3	"		10000		■	■	■	■	■	■							
3,6	590	390,2	"		10000		■	■	■	■	■	■							
3,9	395	359,6	"		10000		■	■	■	■	■	■							
4,6	580	306,6	"		10000		■	■	■	■	■	■							
5,4	560	261,6	"		10000		■	■	■	■	■	■							
6,6	445	211,1	"		10000		■	■	■	■	■	■							

M = 614 .. 1100 Nm

50 Hz		i	Type	F_{RN}	F_{RV}	max. permissible input torque M1 [Nm] *													
n_2	M_2					1	3	3	5	10	20	26	55	105	145	210	290	385	575
(4 pole)	f_B=1,0					IEC Motor Size *													
1/min	Nm			N	N	56	63	71	80	90	100	112	132	160	180	200	225	250	280
6,4	790	219,7	**BS40-..-C/IEC**	15000					■	■	■								
7,9	810	178,2	"	15000					■	■	■								
9,5	960	148,1	"	15000					■	■	■								
11	980	126	"	14900					■	■	■								
13	950	108,1	"	14000					■	■	■								
16	900	86,33	"	12900					■	■	■	■							
19	880	73,09	"	12100					■	■	■	■							
20	740	69,6	"	11800					■	■	■								
23	860	60,38	"	11200					■	■	■	■							
29	830	47,69	"	9600					■	■	■	■							
35	800	40,37	"	9000					■	■	■	■							
37	780	38,13	"	9400					■	■	■	■							
42	780	33,35	"	8300					■	■	■	■							
46	750	30,63	"	8700					■	■	■	■							
53	740	26,18	"	7500					■	■	■	■							
66	710	21,06	"	6900					■	■	■	■							
83	670	16,92	"	6400					■	■	■	■							
107	614	13,03	"	5850					■	■	■	■							
1,5	740	908,2	**BS40Z-..-C/IEC**	15000		■	■	■	■	■	■								
1,9	750	736,5	"	15000		■	■	■	■	■	■								
2,3	900	612,1	"	15000		■	■	■	■	■	■								
2,7	1100	520,8	"	15000		■	■	■	■	■	■								
3,1	990	446,8	"	15000		■	■	■	■	■	■								
3,9	1080	356,8	"	15000		■	■	■	■	■	■								
4,6	1070	302,1	"	15000		■	■	■	■	■	■								
4,9	710	287,7	"	15000		■	■	■	■	■	■								
5,6	900	249,6	"	15000		■	■	■	■	■	■								
7,1	700	197,1	"	15000		■	■	■	■	■	■								

* acc. to DIN/EN 50347:2001
For speeds above 1500 1/min, refer to manufacturer

10

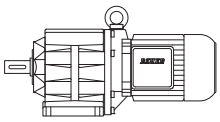

Page

Dimensional drawings helical-geared motors 399-452
- Standard 400-427
- Tanden Gearbox 428-451

BG04

Fussausführung

Code -11/

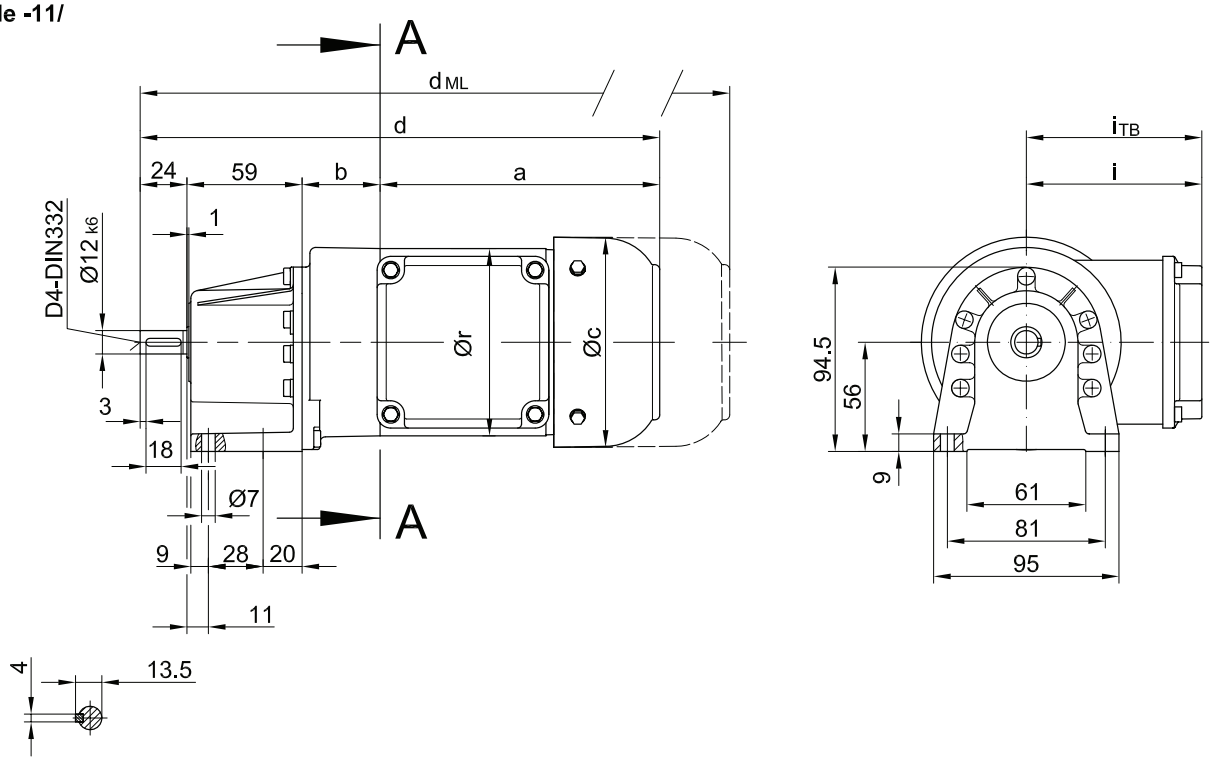

Flansch mit Durchgangslöchern

Code -31/

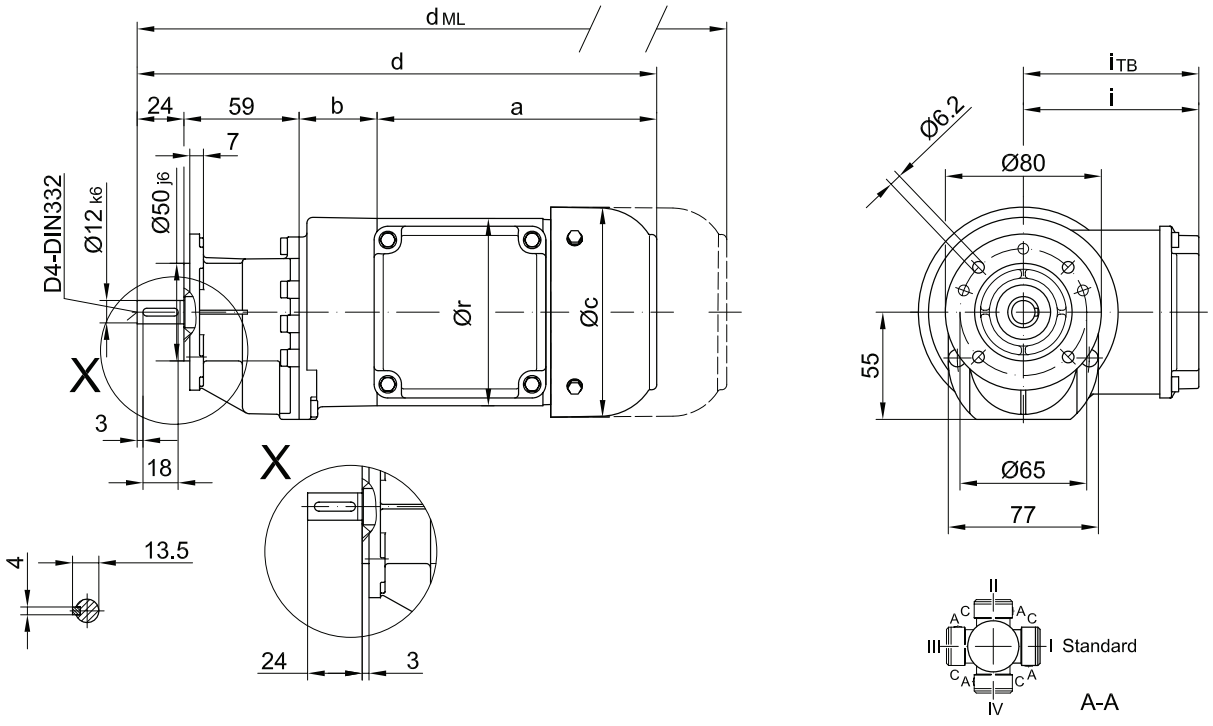

Typ	a	b	c	d	i	r	Ausführung mit Motoranbauten				
							i_{TB}	ES../ZS..	G	ES../ZS..-G	RR/RL
								d_{ML}	d_{ML}	d_{ML}	d_{ML}
BG04-../D04..	143	40	111	266	90	96	124.5	309	328.5	366.5	-

The actual gearbox design can vary from the geometry shown.

BG05

Fussausführung

Code -11/

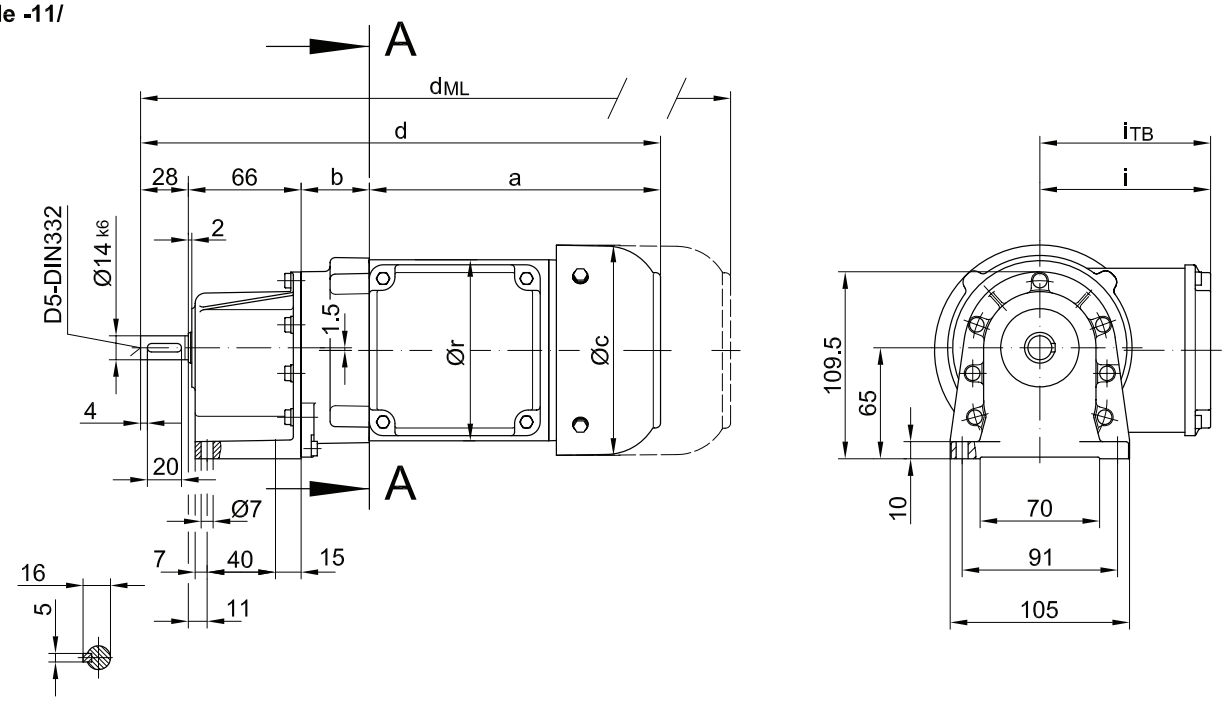

Flansch mit Durchgangslöchern

Code -31/

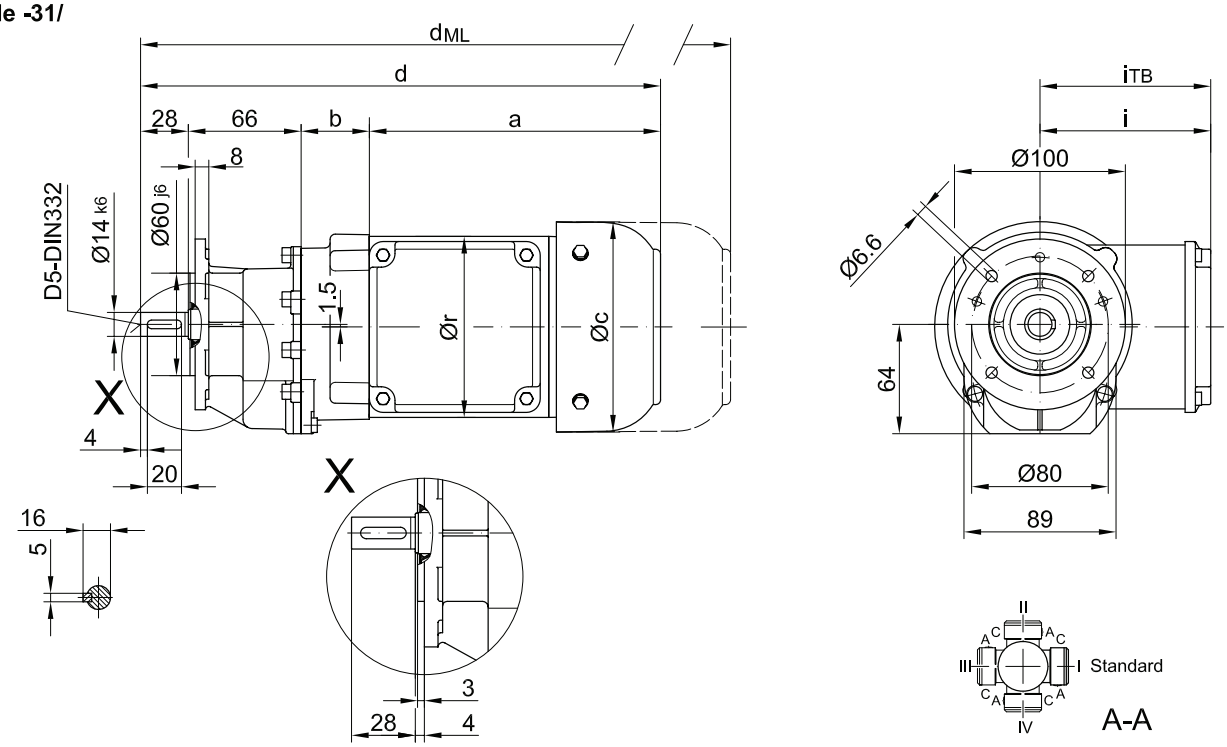

Typ	a	b	c	d	i	r	Ausführung mit Motoranbauten				
							i_{TB}	ES../ZS..	G	ES../ZS..-G	RR/RL
								d_{ML}	d_{ML}	d_{ML}	d_{ML}
BG05-../D04..	143	38	111	275	90	96	124.5	318	337.5	380.5	-
BG05-../D05..	170	40	123	305	100	106	129.5	347	408	450	-
BG05-../D06..	170	40	123	305	100	121	131.5	347	408	450	-
BG05-../D07..	190	40	123	325	100	121	131.5	367	428	470	-

The actual gearbox design can vary from the geometry shown.

Dimension

BG06

Fussausführung

Code -11/

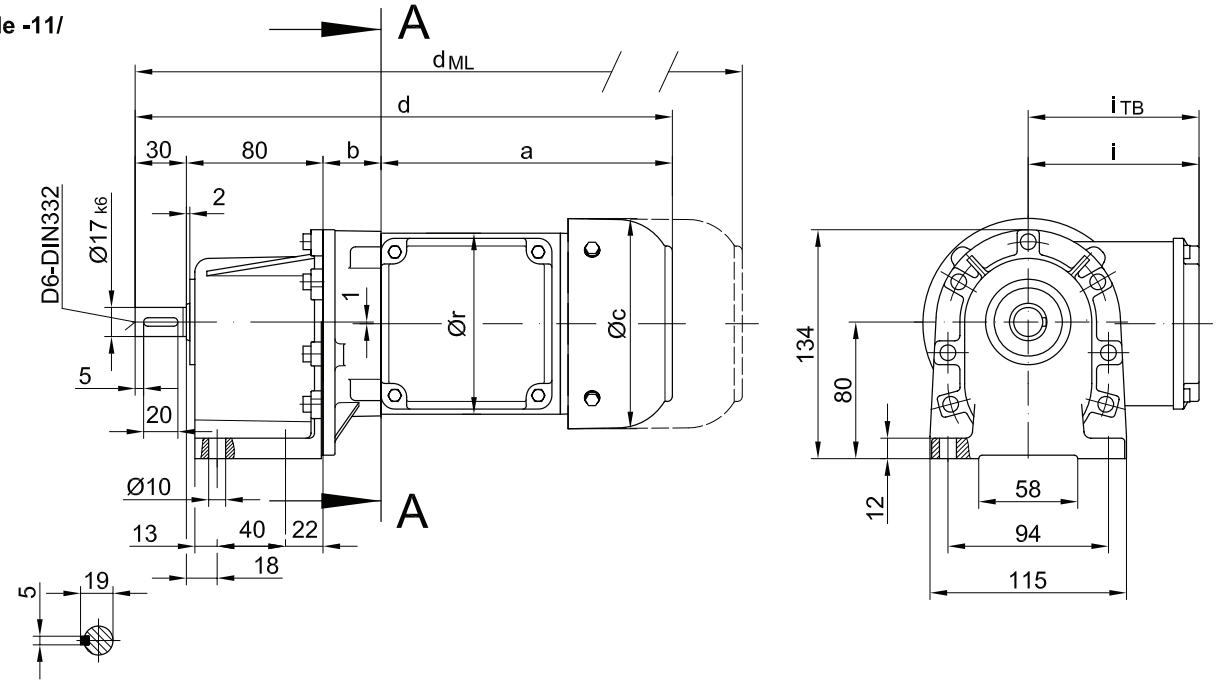

Flansch mit Durchgangslöchern

Code -31/

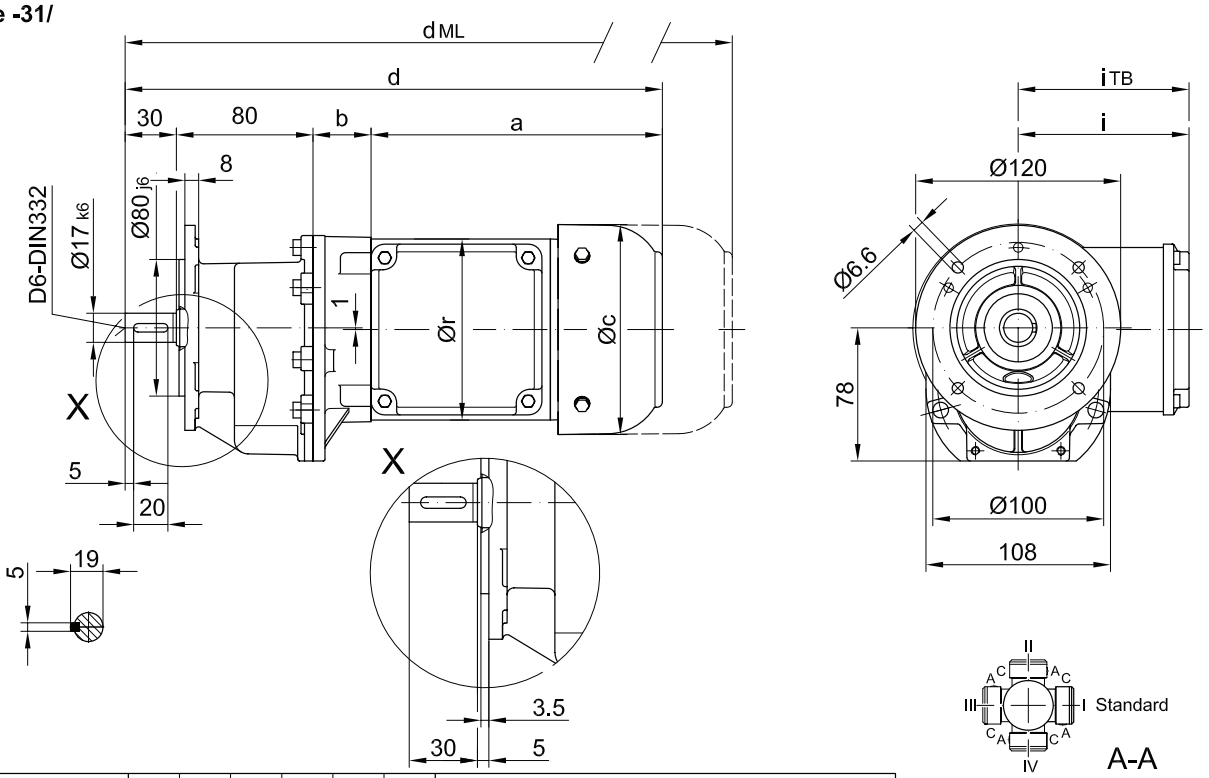

Typ	a	b	c	d	i	r	Ausführung mit Motoranbauten				
							i_{TB}	ES../ZS..	G	ES../ZS..-G	RR/RL
								d_{ML}	d_{ML}	d_{ML}	d_{ML}
BG06-../D04..	143	32	111	285	90	96	124.5	328	347.5	390.5	-
BG06-../D05..	170	34	123	315	100	106	129.5	357	407.5	459.5	-
BG06-../D06..	170	34	123	315	100	121	131.5	357	407.5	459.5	-
BG06-../D07..	190	34	123	335	100	121	131.5	377	427.5	479.5	-
BG06-../D..08..	200	78	156	388	115	156	149.5	454	495.5	561.5	454

The actual gearbox design can vary from the geometry shown.

BG10 - BG10Z

Fussausführung mit Durchgangslöchern

Code -11/

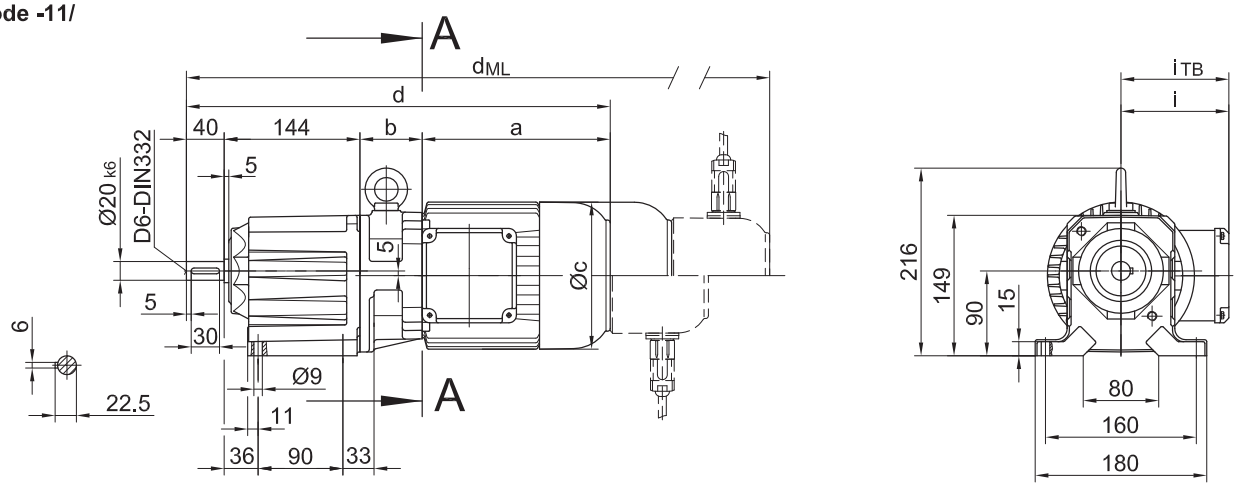

Flansch mit Durchgangslöchern

Code -37/
(Code -27/)

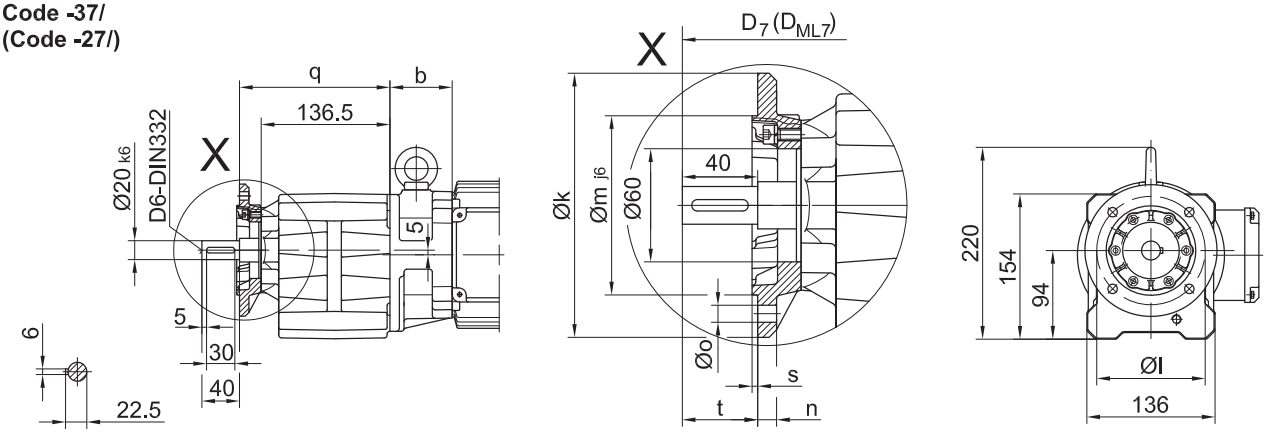

Flanschmasse

BG10(Z)	k	l	m	n	o	q	s	t	D_7	D_{ML7}
Standard -37/	140	115	95	10	9	159.5	3	40	d+15.5	d_{ML}+15.5
klein -27/	120	100	80	8	6.6	154.5	3	45	d+15.5	d_{ML}+15.5

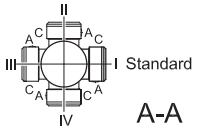

Typ	a	b	c	d	i	Ausführung mit Motoranbauten				
						i_{TB}	ES../ZS..	G	ES../ZS..-G	RR/RL
							d_{ML}	d_{ML}	d_{ML}	d_{ML}
BG10Z-../D04..	143	86	111	413	90	124.5	456	475.5	512.5	-
BG10-../D05..	170	62	123	417	100	129.5	459	520	562	-
BG10Z../D05..	170	88	123	443	100	129.5	485	456	649	-
BG10-../D06..	170	62	123	417	100	131.5	459	520	562	-
BG10Z-../D06..	170	88	123	443	100	131.5	485	546	649	-
BG10-../D07..	190	62	123	437	100	131.5	479	540	582	-
BG10Z-../D07..	190	88	123	463	100	131.5	505	566	669	-
BG10-../D..08..	200	66	156	450	115	149.5	516	557	623	516
BG10Z-../D..08..	200	132	156	516	115	149.5	582	623	689	582
BG10-../D..09..	251	80.5	181	515	124	164	602	622	711	602

The actual gearbox design can vary from the geometry shown.

BG10 - BG10Z

Flansch mit Gewindelöchern

Code -71/

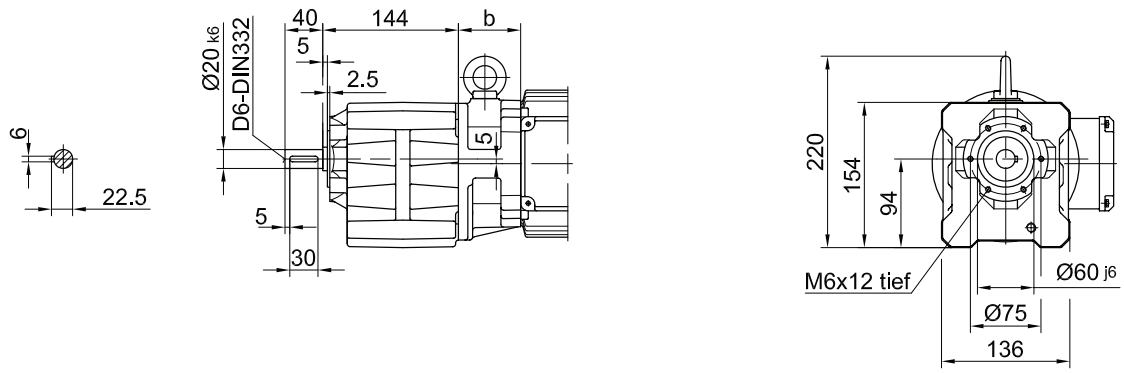

Fuss mit Gewindelöchern links und rechts

Code -61LR/

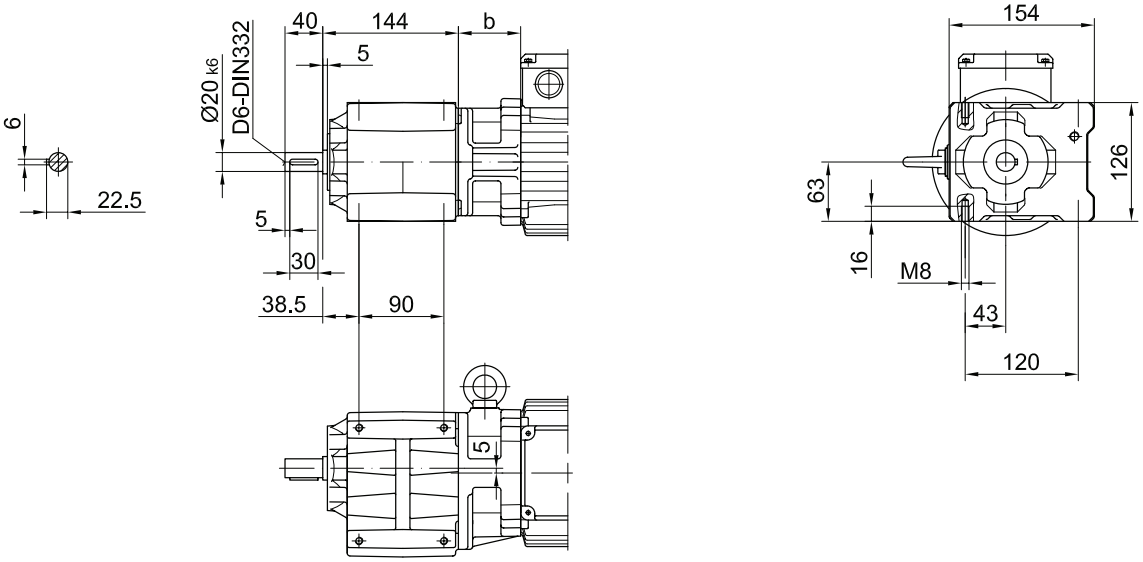

Fussplatte links

Code -91L/

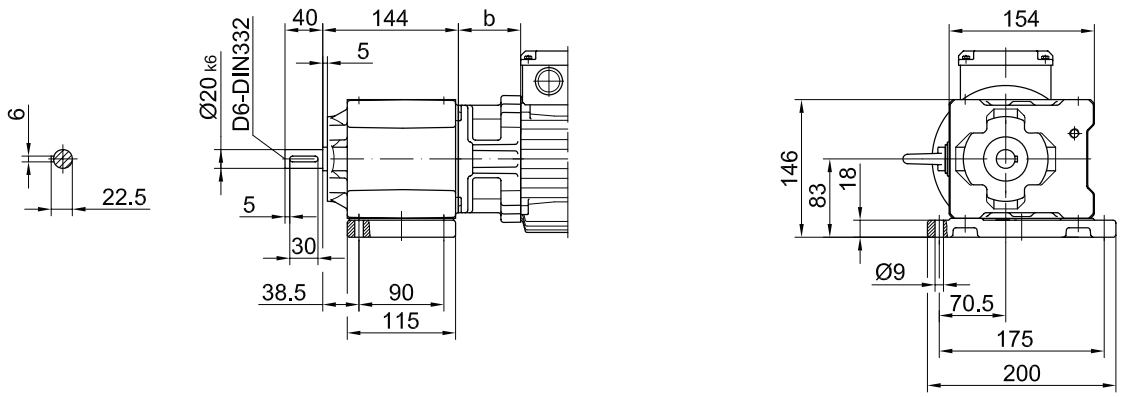

The actual gearbox design can vary from the geometry shown.

BG10X - BG10XZ

Fussausführung mit Durchgangslöchern

Code -11/

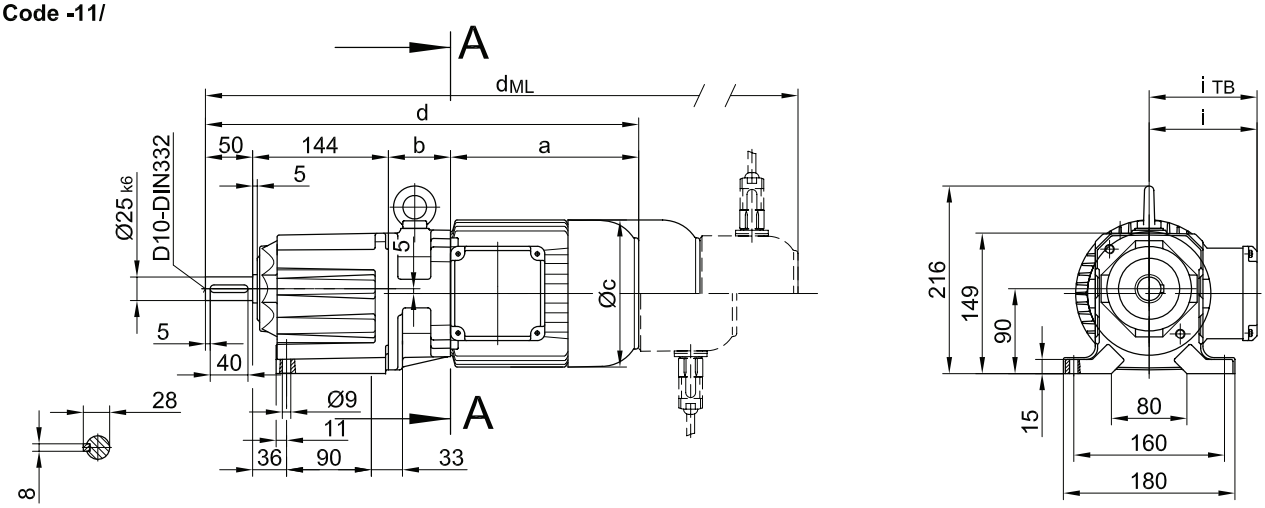

Flansch mit Durchgangslöchern

Code -37/
(Code -27/)

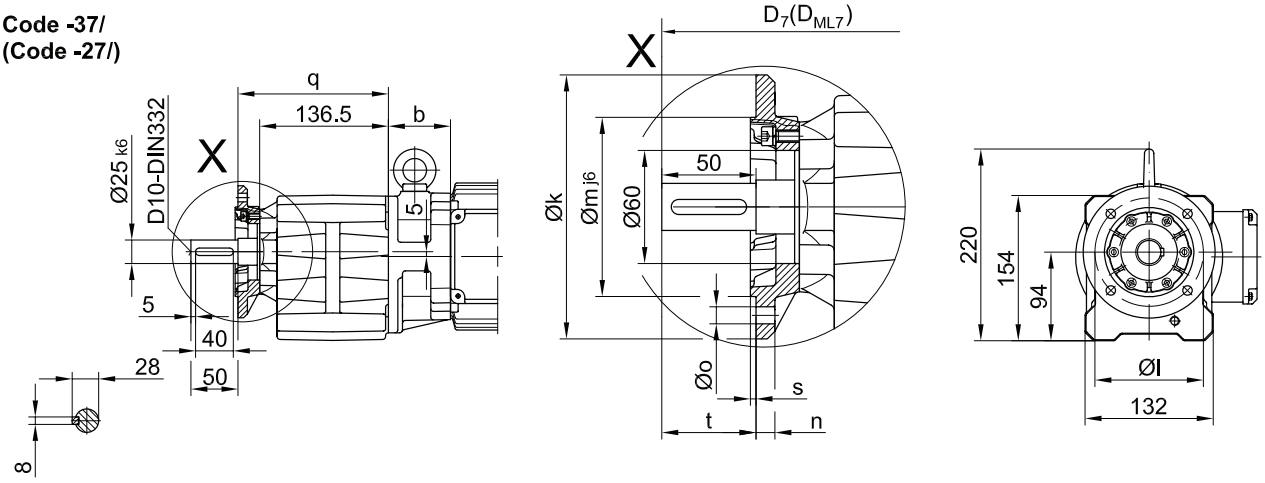

Flanschmasse

BG10X(Z)	k	l	m	n	o	q	s	t	D_7	D_{ML7}
Standard -37/	Ø140	Ø115	Ø95	10	Ø9	159.5	3	50	d+15.5	d_{ML}+15.5
klein -27/	Ø120	Ø100	Ø80	8	Ø6.6	154.5	3	55	d+15.5	d_{ML}+15.5

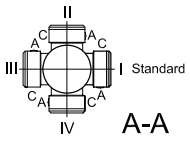

Typ	a	b	c	d	i	Ausführung mit Motoranbauten				
						i_{TB}	ES../ZS..	G	ES../ZS..G	RR/RL
							d_{ML}	d_{ML}	d_{ML}	d_{ML}
BG10XZ-.1/D04..	143	86	111	423	90	124.5	456	475.5	512.5	-
BG10X-.1/D05..	170	62	123	427	100	129.5	459	520	562	-
BG10XZ-.1/D05..	170	88	123	453	100	129.5	485	546	649	-
BG10X-.1/D06..	170	62	123	427	100	131.5	459	520	562	-
BG10XZ-.1/D06..	170	88	123	453	100	131.5	485	546	649	-
BG10X-.1/D07..	190	62	123	447	100	131.5	479	540	582	-
BG10XZ-.1/D07..	190	88	123	473	100	131.5	505	566	669	-
BG10X-.1/D..08..	200	66	156	460	115	149.5	516	557	623	516
BG10XZ-.1/D..08..	200	132	156	526	115	149.5	582	623	689	582
BG10X-.1/D..09..	251	80.5	176	525	124	164	602	622	711	602

The actual gearbox design can vary from the geometry shown.

BG10X - BG10XZ

Flansch mit Gewindelöchern

Code -71/

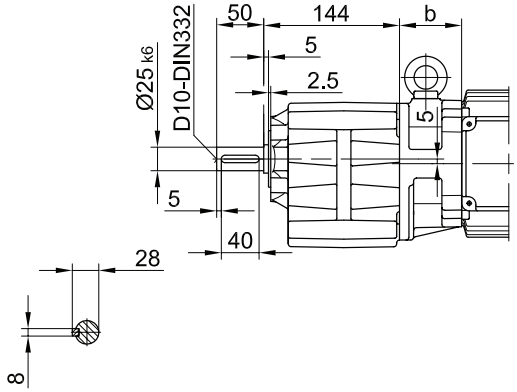

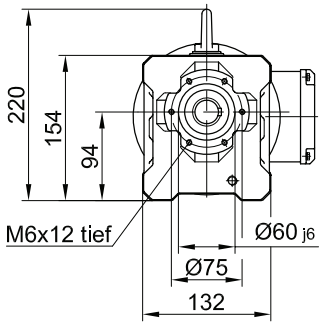

Fuss mit Gewindelöchern links und rechts

Code -61LR/

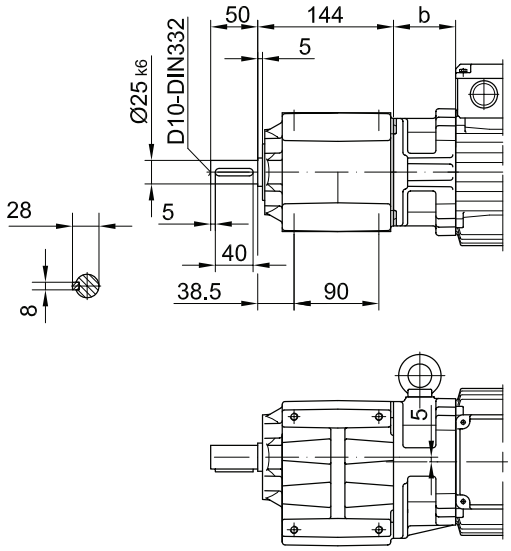

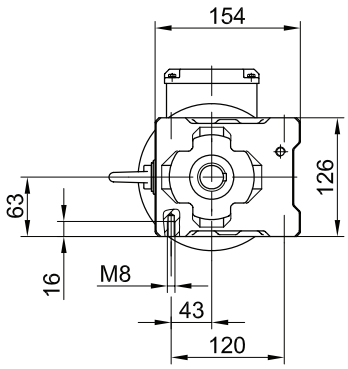

Fussplatte links

Code -91L/

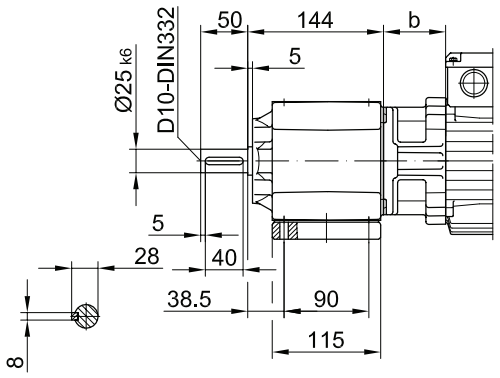

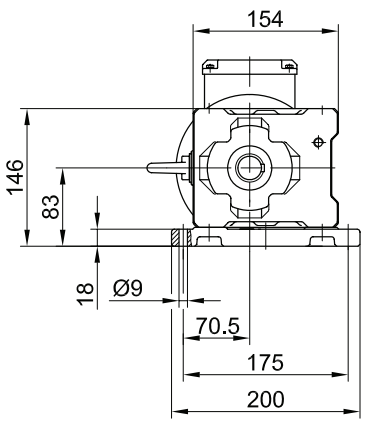

The actual gearbox design can vary from the geometry shown.

BG15-BG15Z

Fussausführung mit Durchgangslöchern

Code -11/

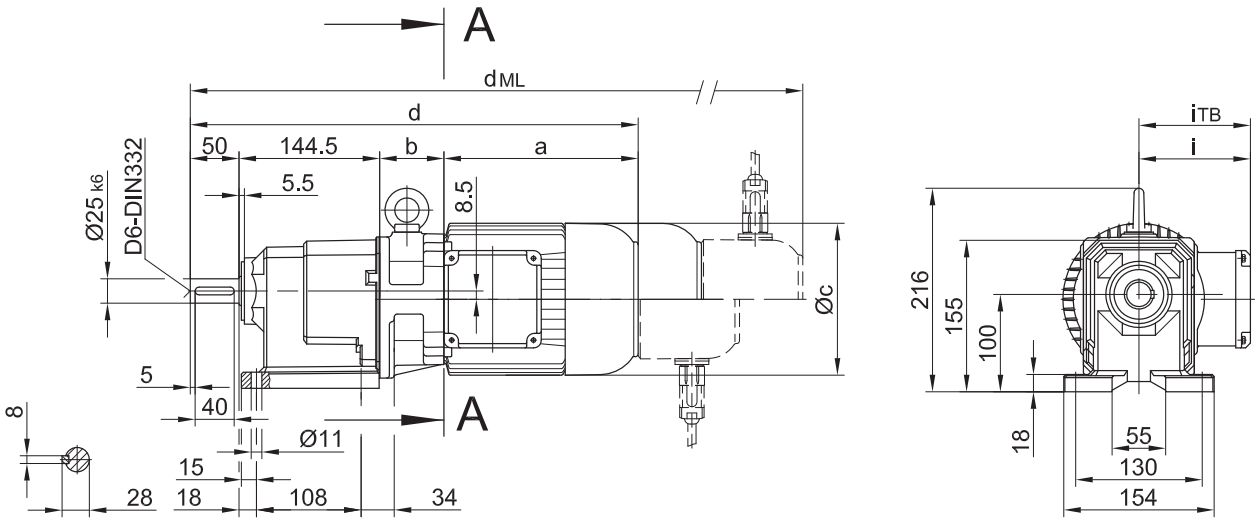

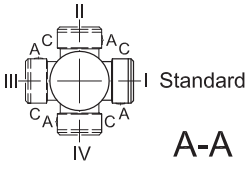

Typ	a	b	c	d	i	Ausführung mit Motoranbauten				
						i_{TB}	ES../ZS..	G	ES../ZS..-G	RR/RL
							d_{ML}	d_{ML}	d_{ML}	d_{ML}
BG15Z-../D04..	143	86	111	423.5	90	124.5	466.5	486	523	-
BG15-../D05..	170	62	123	426.5	100	129.5	468.5	530.5	572.5	-
BG15Z../D05..	170	88	123	452.5	100	129.5	494.5	466.5	659.5	-
BG15-../D06..	170	62	123	426.5	100	131.5	468.5	530.5	572.5	-
BG15Z-../D06..	170	88	123	452.5	100	131.5	494.5	556.5	659.5	-
BG15-../D07..	190	62	123	446.5	100	131.5	488.5	550.5	592.5	-
BG15Z-../D07..	190	88	123	472.5	100	131.5	514.5	576.5	679.5	-
BG15-../D..08..	200	66	156	460.5	115	149.5	526.5	567.5	633.5	526.5
BG15Z-../D..08..	200	132	156	526.5	115	149.5	592.5	633.5	699.5	592.5
BG15-../D..09..	251	80.5	181	526	124	164	516.5	632.5	721.5	612.5

The actual gearbox design can vary from the geometry shown.

The actual gearbox design can vary from the geometry shown.

BG20 - BG20Z

Fussausführung mit Durchgangslöchern

Code -11/

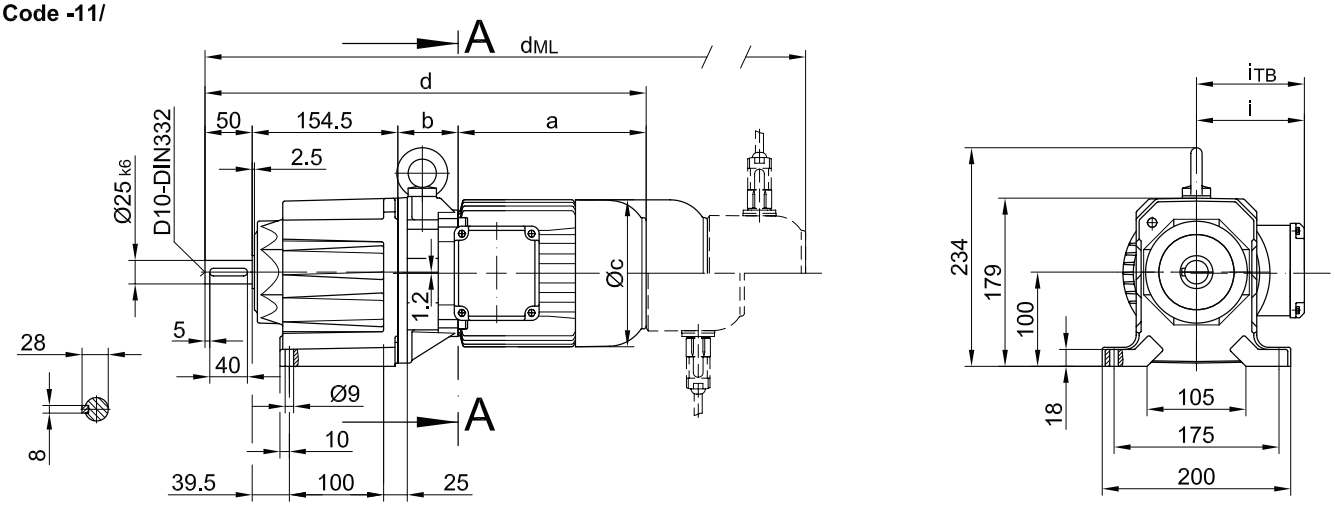

Flansch mit Durchgangslöchern

Code -37/
(Code -47/)

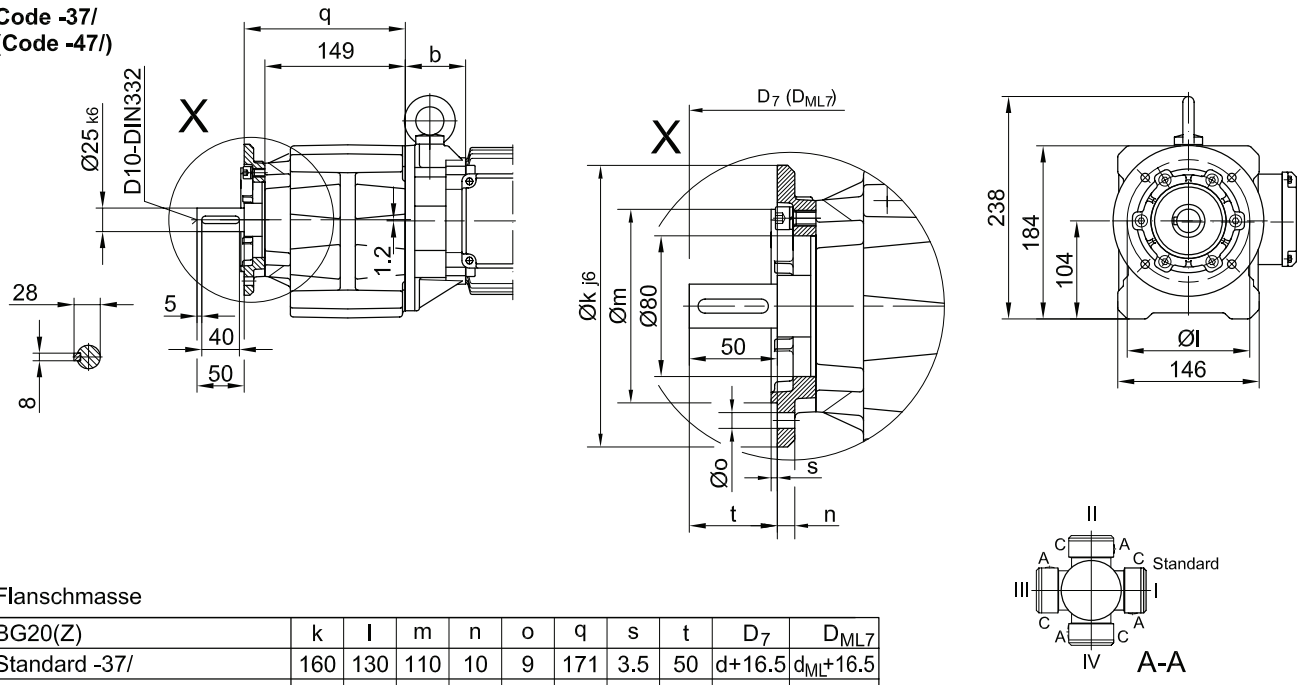

Flanschmasse

BG20(Z)	k	l	m	n	o	q	s	t	D_7	D_{ML7}
Standard -37/	160	130	110	10	9	171	3.5	50	d+16.5	d_{ML}+16.5
gross -47/	200	165	130	12	11	178	3.5	43	d+16.5	d_{ML}+16.5

Typ	a	b	c	d	i	Ausführung mit Motoranbauten				
						i_{TB}	ES../ZS..	G	ES../ZS..-G	RR/RL
							d_{ML}	d_{ML}	d_{ML}	d_{ML}
BG20Z-../D04..	143	100	111	447	90	124.5	491	509.5	553.5	-
BG20-../D05..	170	60	123	435	100	129.5	477	538	580	-
BG20Z-../D05..	170	102	123	477	100	129.5	519	580	622	-
BG20-../D06..	170	60	123	435	100	131.5	477	538	580	-
BG20Z-../D06..	170	102	123	477	100	131.5	519	580	622	-
BG20-../D07..	190	60	123	455	100	131.5	497	558	600	-
BG20Z-../D07..	190	102	123	497	100	131.5	539	600	642	-
BG20-../D..08..	200	64	156	468	115	149.5	534	575	637	534
BG20Z-../D..08..	200	146	156	550	115	149.5	616	657	723	616
BG20-../D..09..	251	78.5	181	534	124	164	621	641	728	621

The actual gearbox design can vary from the geometry shown.

BG20 - BG20Z

Flansch mit Gewindelöchern

Code -71/

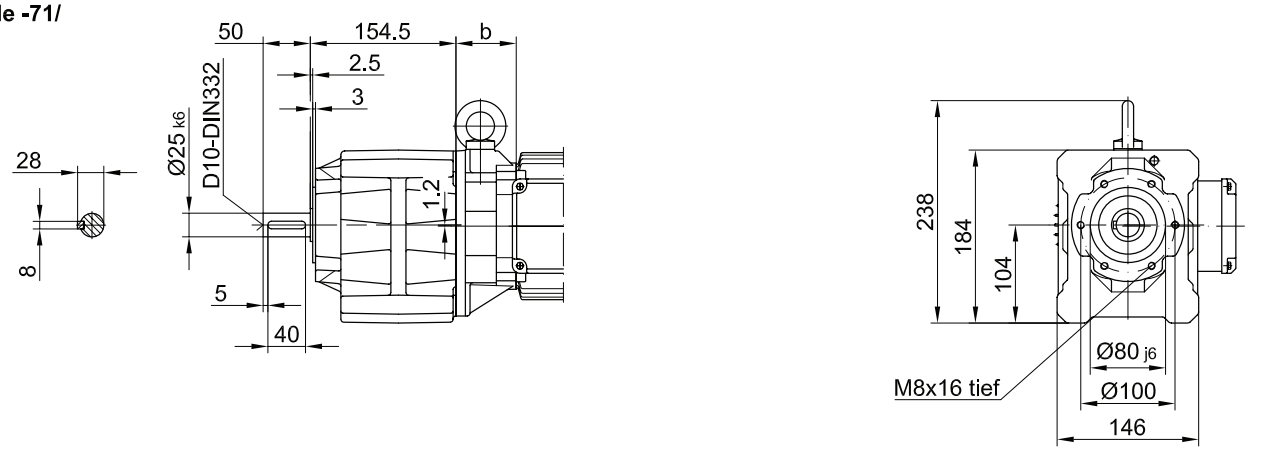

Fuss mit Gewindelöchern links und rechts

Code -61LR/

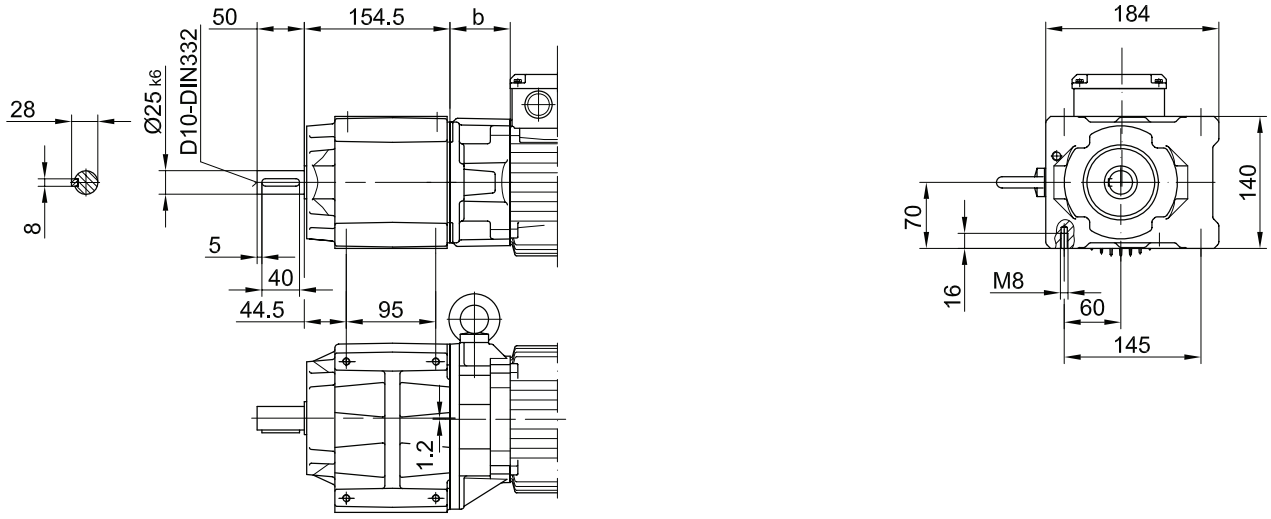

Fussausführung rechts mit Durchgangslöchern

Code -01R

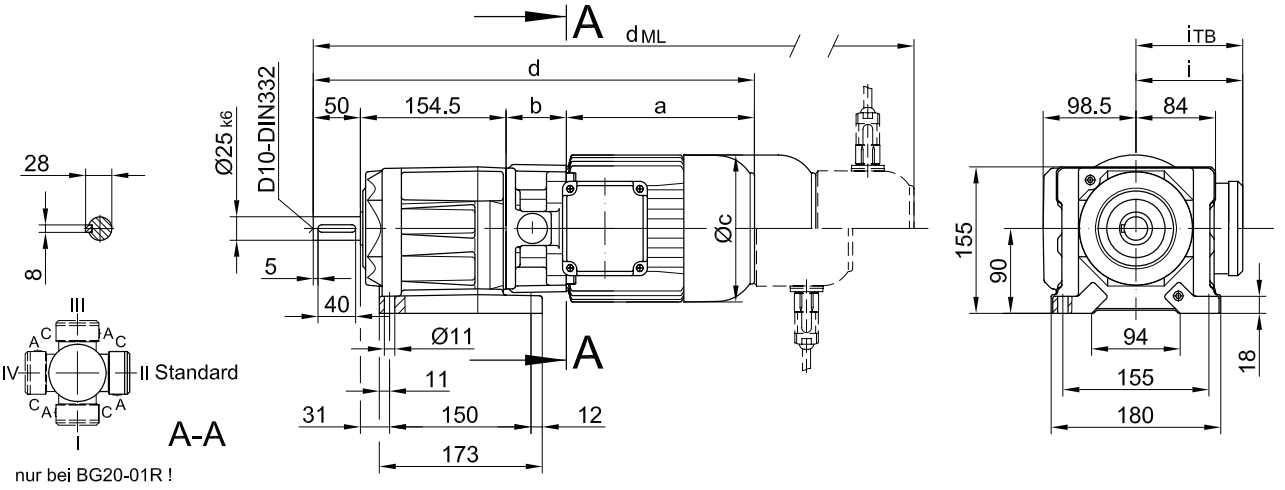

The actual gearbox design can vary from the geometry shown.

BG30 - BG30Z

Fussausführung mit Durchgangslöchern

Code -11/

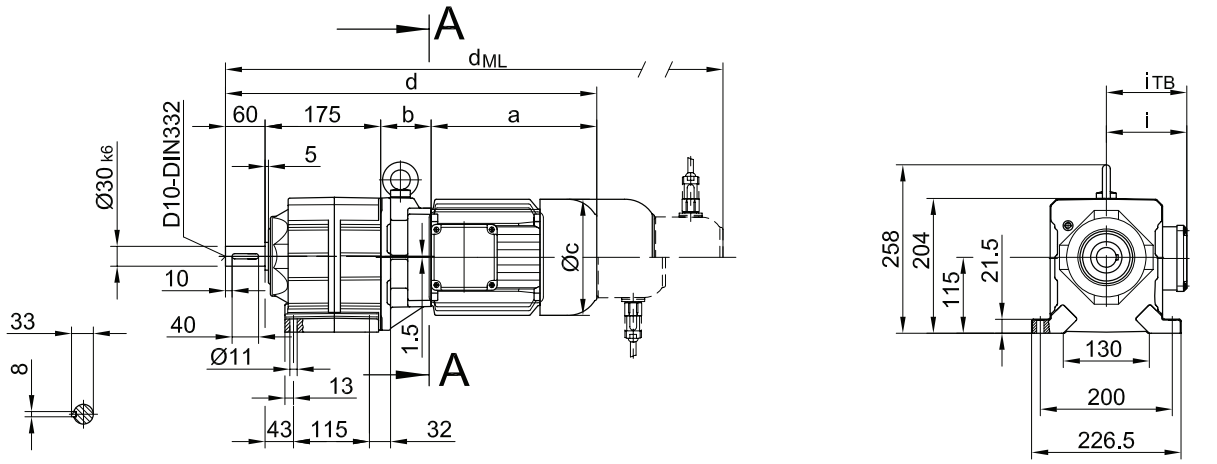

Flansch mit Durchgangslöchern

Code -37/
(Code -27/)

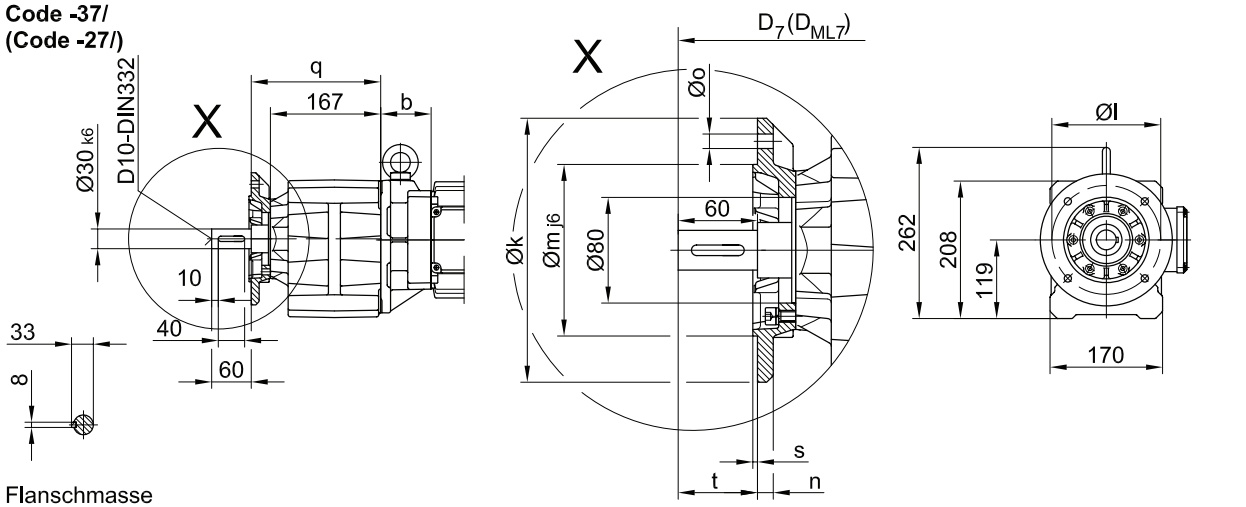

Flanschmasse

BG30(Z)	k	l	m	n	o	q	s	t	D_7	D_{ML7}
Standard -37/	200	165	130	12	11	196	3.5	60	d+21	d_{ML}+21
klein -27/	160	130	110	10	9	189	3.5	67	d+21	d_{ML}+21

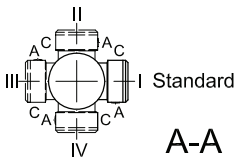

Typ	a	b	c	d	i	Ausführung mit Motoranbauten				
						i_{TB}	ES../ZS..	G	ES../ZS..-G	RR/RL
							d_{ML}	d_{ML}	d_{ML}	d_{ML}
BG30-../D05..	170	58	123	464	100	129.5	506	567	609	-
BG30Z-../D05..	170	133.5	123	539	100	129.5	581	642	684	-
BG30-../D06..	170	58	123	464	100	131.5	506	567	609	-
BG30Z-../D06..	170	133.5	123	539	100	131.5	581	642	684	-
BG30-../D07..	190	58	123	484	100	131.5	526	587	629	-
BG30Z-../D07..	190	133.5	123	559	100	131.5	601	662	709	-
BG30-../D..08..	200	62	156	497	115	149.5	563	604	670	563
BG30Z-../D..08..	200	137.5	156	572	115	149.5	638	679	745	638
BG30-../D..09..	251	76.5	181	562	124	164	649	669	756	649
BG30Z-../D..09..	251	152	181	638	124	164	725	745	832	725
BG30-../D..11..	319	83	228	637	181	181	744	744	840	733

The actual gearbox design can vary from the geometry shown.

BG30 - BG30Z

Flansch mit Gewindelöchern

Code -71/

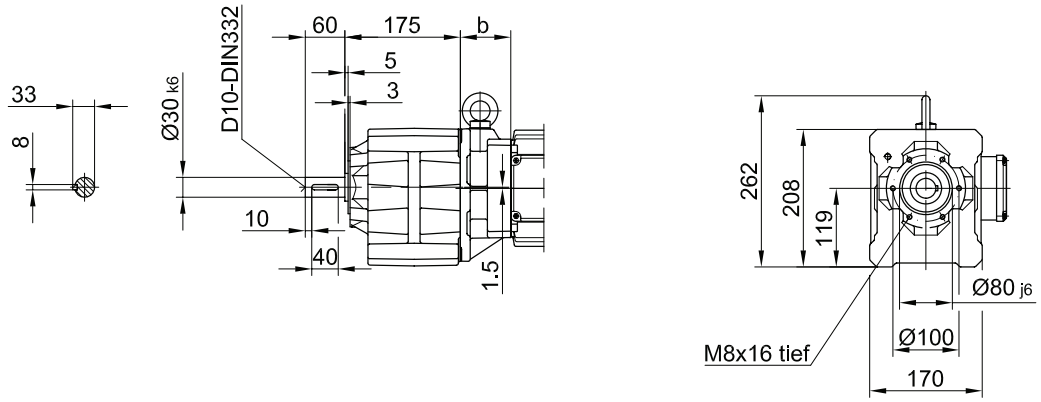

Fuss mit Gewindelöchern links und rechts

Code -61LR/

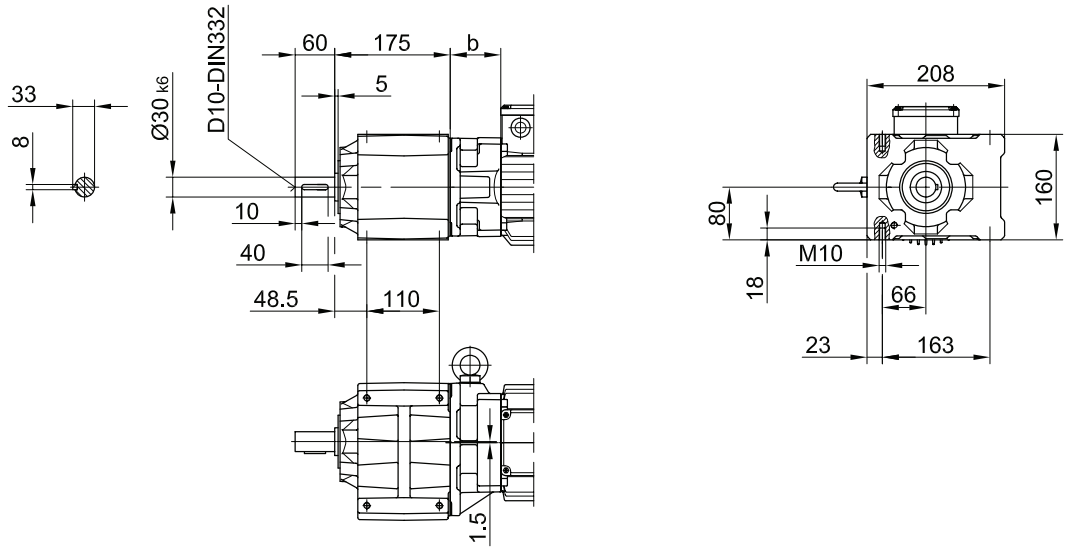

Fussplatte links

Code -91L/

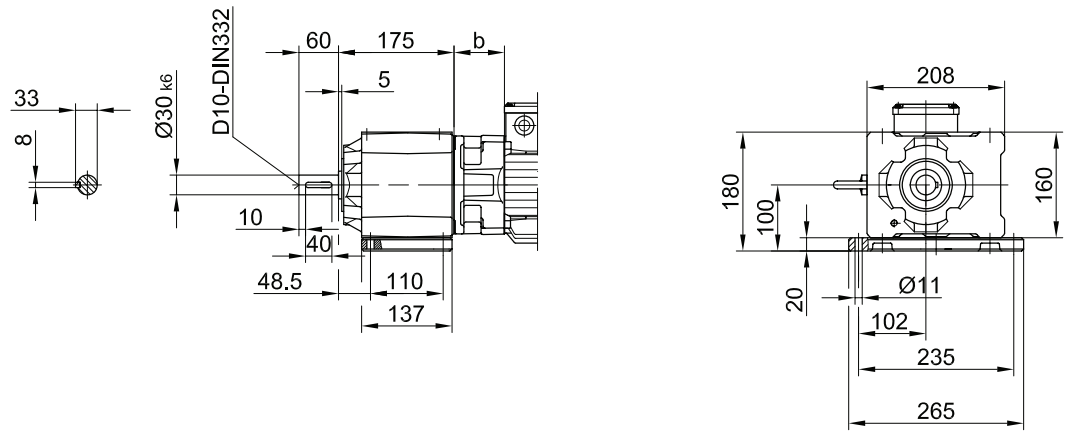

The actual gearbox design can vary from the geometry shown.

BG40 - BG40Z

Fuss mit Durchgangslöchern

Code -11/

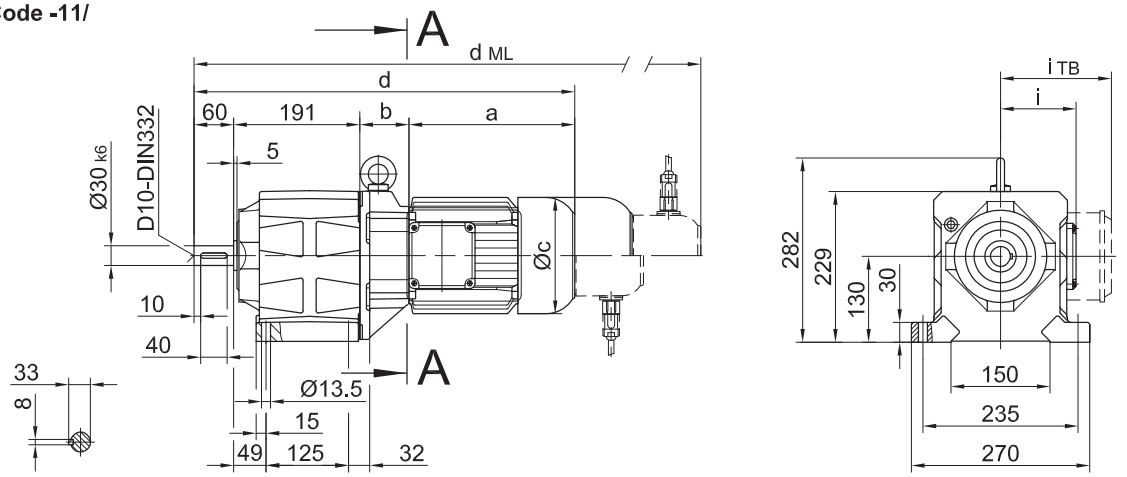

Flansch mit Durchgangslöchern

Code -37/
(Code -47/)

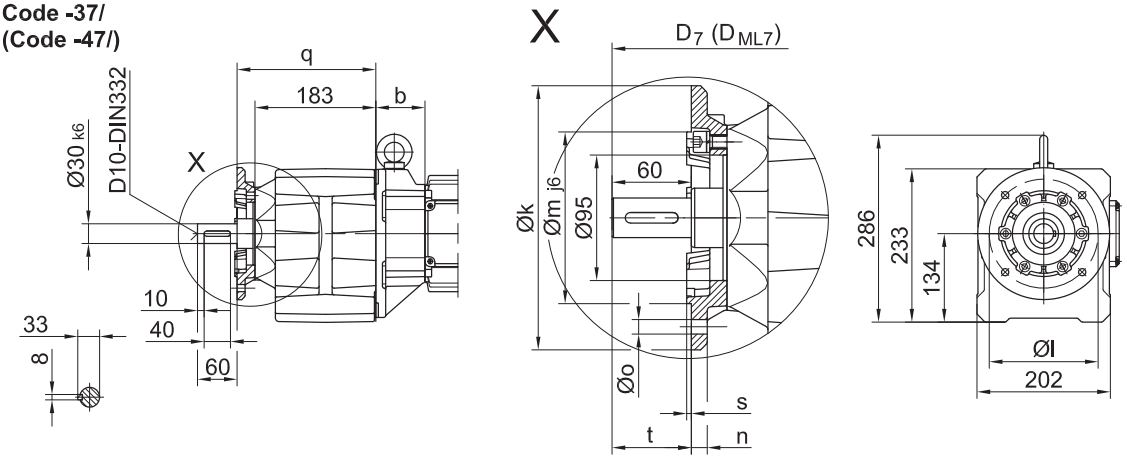

Flanschmasse

BG40(Z)	k	l	m	n	o	q	s	t	D_7	D_{ML7}
Standard -37/	200	165	130	12	11	210	3.5	60	d+19	d_{ML}+19
gross -47/	250	215	180	16	13.5	219	4	51	d+19	d_{ML}+19

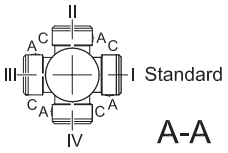

A-A

Typ	a	b	c	d	i	Ausführung mit Motoranbauten				
						i_{TB}	ES../ZS..	G	ES../ZS..-G	RR/RL
							d_{ML}	d_{ML}	d_{ML}	d_{ML}
BG40Z-../D05..	170	138.5	123	561	100	129.5	603	664	706	-
BG40Z-../D06..	170	138.5	123	561	100	131.5	603	664	706	-
BG40Z-../D07..	190	138.5	123	581	100	131.5	623	684	726	-
BG40-../D..08..	200	60	156	511	115	149.5	577	618	684	577
BG40Z-../D..08..	200	142.5	156	593	115	149.5	659	700	766	659
BG40-../D..09..	251	74.5	181	576	124	164	663	683	770	663
BG40Z-../D..09..	251	157	181	659	124	164	746	766	853	746
BG40-../D..11..	319	81	228	651	181	181	747	758	854	747

The actual gearbox design can vary from the geometry shown.

BG40 - BG40Z

Flansch mit Gewindelöchern

Code -71/

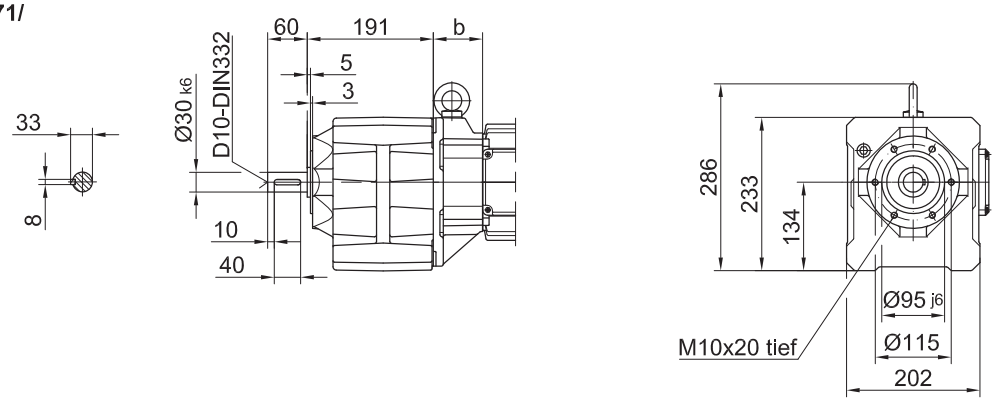

Fuss mit Gewindelöchern links und rechts

Code -61LR/

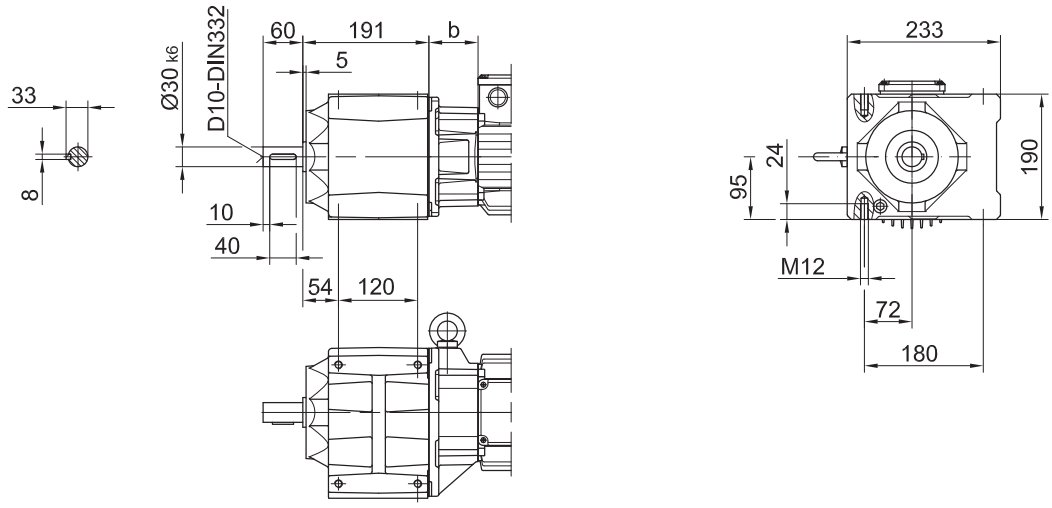

Fussplatte links

Code -91L/

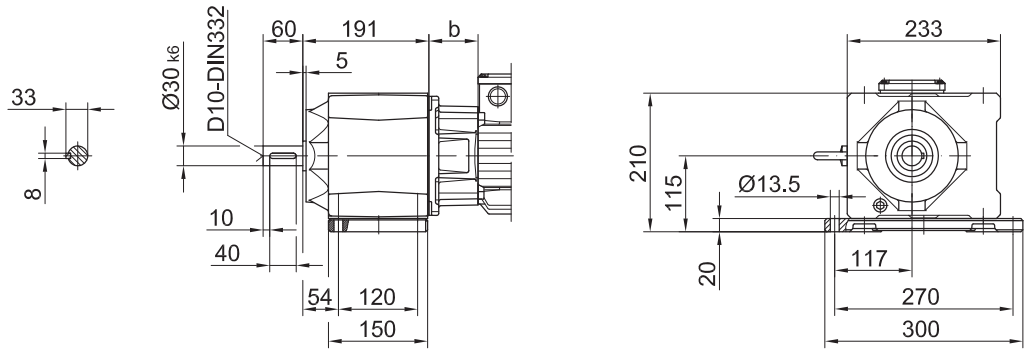

The actual gearbox design can vary from the geometry shown.

BG50 - BG50Z

Fussausführung mit Durchgangslöchern

Code -11/

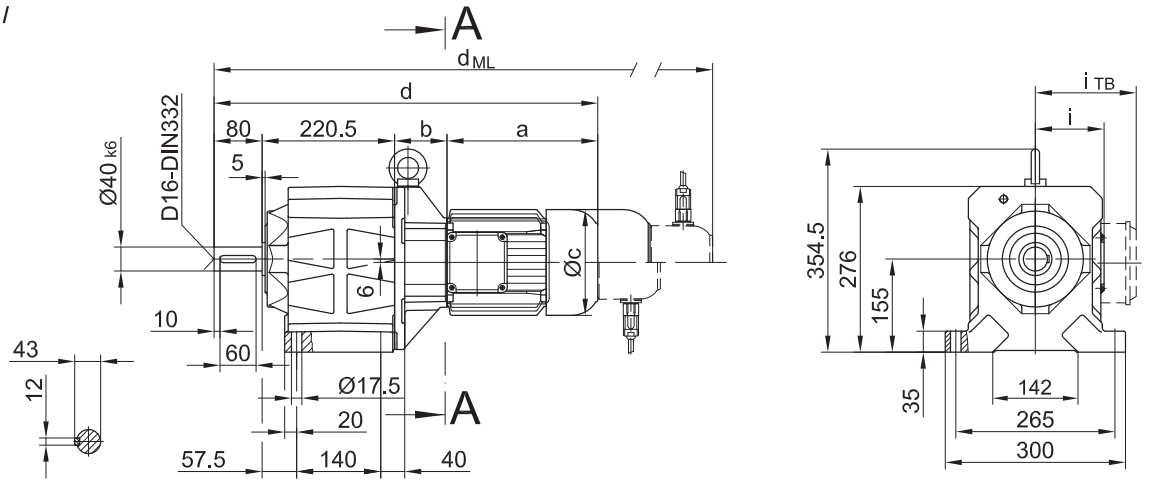

Flansch mit Durchgangslöchern

Code -37/
(Code -27/)

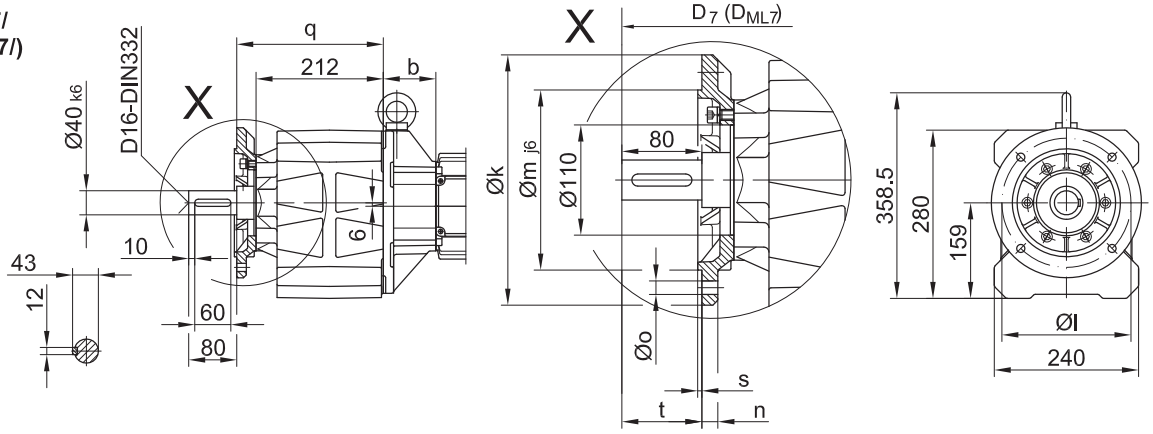

Flanschmasse

BG50(Z)	k	l	m	n	o	q	s	t	D_7	D_{ML7}
Standard -37/	250	215	180	16	13.5	244	4	80	d+23.5	d_{ML}+23.5
klein -27/	200	165	130	12	11	241	3.5	83	d+23.5	d_{ML}+23.5

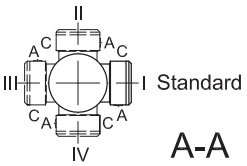

Typ	a	b	c	d	i	Ausführung mit Motoranbauten				
						i_{TB}	ES../ZS..	G	ES../ZS..-G	RR/RL
							d_{ML}	d_{ML}	d_{ML}	d_{ML}
BG50Z-../D05..	170	155	123	626	100	129.5	668	729	771	-
BG50Z-../D06..	170	155	123	626	100	131.5	668	729	771	-
BG50Z-../D07..	190	155	123	646	100	131.5	688	749	769	-
BG50-../D..08..	200	73	156	573	115	149.5	639	660	746	639
BG50Z-../D..08..	200	159	156	659	115	149.5	725	766	832	725
BG50-../D..09..	251	87.5	181	639	124	164	726	746	833	726
BG50Z-../D..09..	251	173.5	181	725	124	164	812	832	919	812
BG50-../D..11..	319	94	228	714	181	181	810	821	917	810
BG50-../D..13..	393	107	266	801	217	217	909	908	1006	909
BG50-../D..16..	429	121	322	851	243	243	995	959	1103	995

The actual gearbox design can vary from the geometry shown.

BG50 - BG50Z

Flansch mit Gewindelöchern

Code -71/

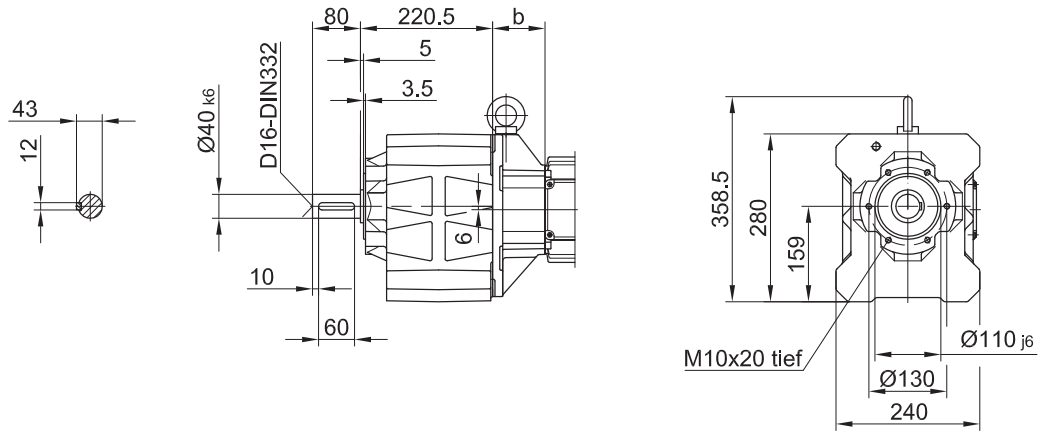

Fuss mit Gewindelöchern links und rechts

Code -61LR/

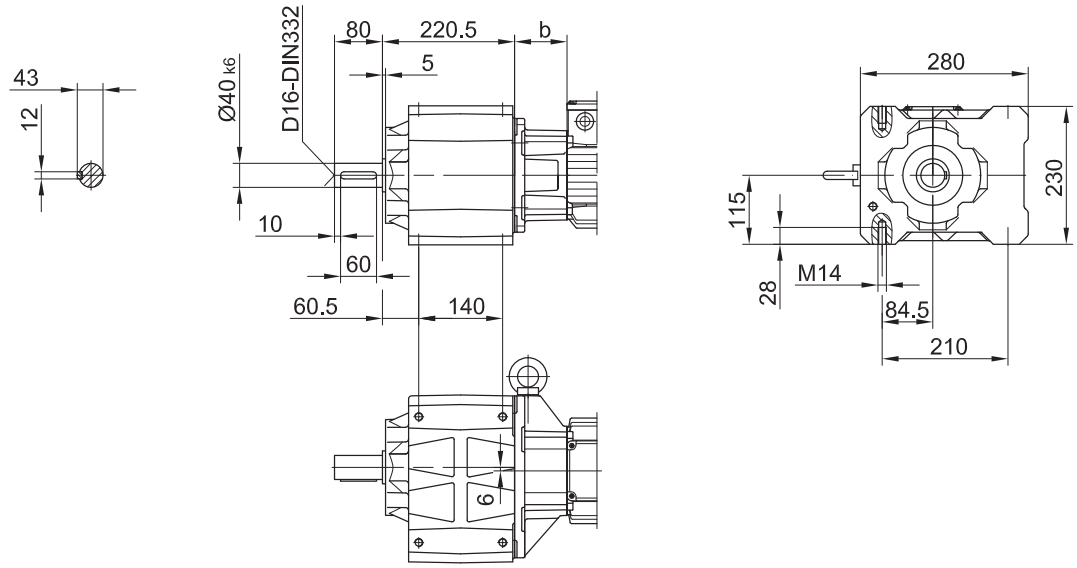

The actual gearbox design can vary from the geometry shown.

BG60 - BG60Z

Fussausführung mit Durchgangslöchern

Code -11/

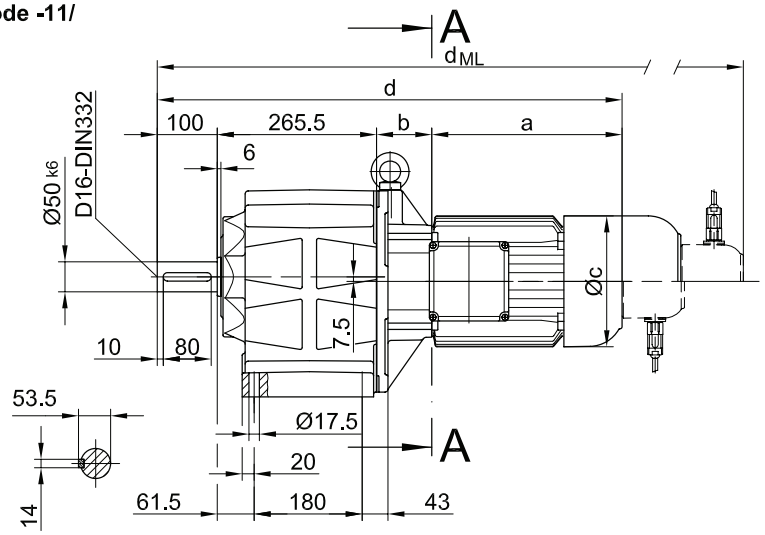

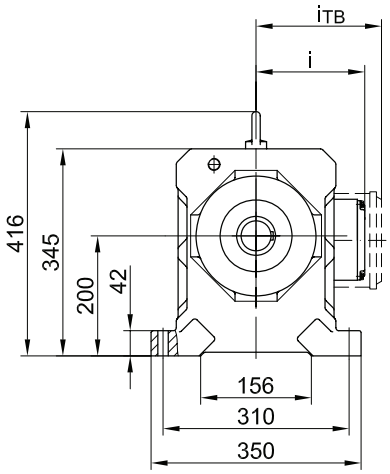

Flansch mit Durchgangslöchern

Code -37/

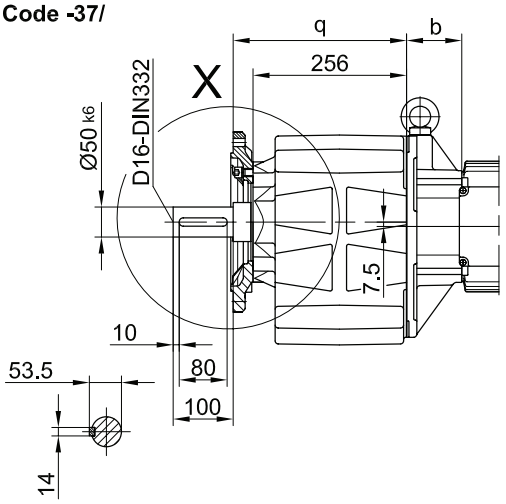

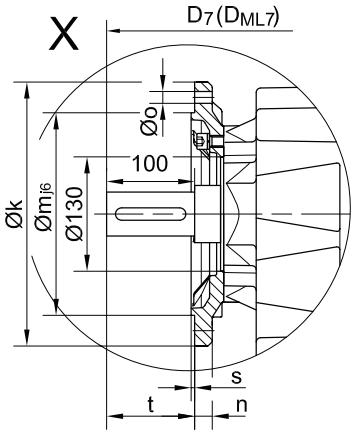

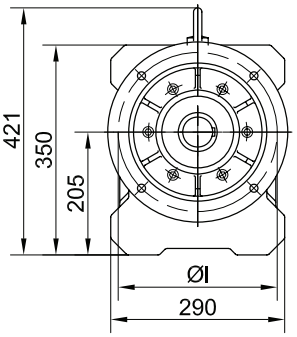

Flanschmasse

BG60(Z)	k	l	m	n	o	q	s	t	D_7	D_{ML7}
Standard -37/	300	265	230	20	13.5	289	4	100	d+23.5	d_{ML}+23.5
klein -27/	250	215	180	16	13.5	286	4	103	d+23.5	d_{ML}+23.5

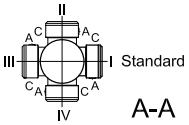

Typ	a	b	c	d	i	i_{TB}	Ausführung mit Motoranbauten			
							ES../ZS..	G	ES../ZS..-G	RR/RL
							d_{ML}	d_{ML}	d_{ML}	d_{ML}
BG60Z-../D..08..	200	181	156	746	115	149.5	812	853	919	812
BG60-../D..09..	251	85.5	181	702	124	164	789	809	896	789
BG60Z-../D..09..	251	195.5	181	812	124	164	899	919	1006	899
BG60-../D..11..	319	92	228	777	181	181	873	884	980	873
BG60Z-../D..11..	319	202	228	887	181	181	983	994	1090	983
BG60-../D..13..	393	105	266	864	217	217	972	971	1079	972
BG60-../D..16..	429	119	322	914	243	243	1059	1021	1165	1058

The actual gearbox design can vary from the geometry shown.

BG60 - BG60Z

Flansch mit Gewindelöchern

Code -71/

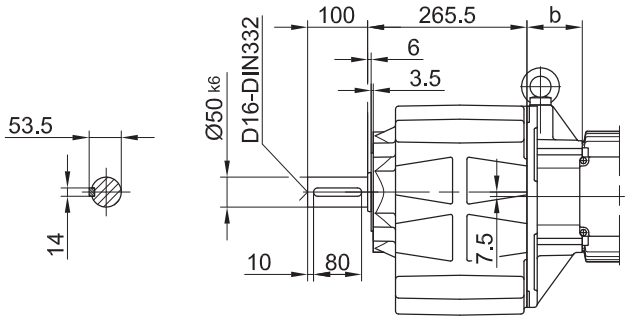

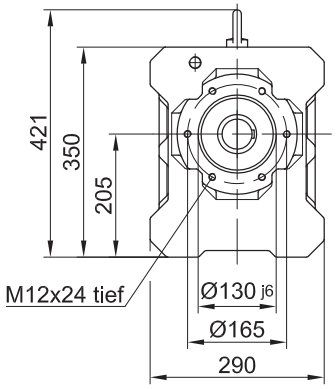

Fuss mit Gewindelöchern links und rechts

Code -61LR/

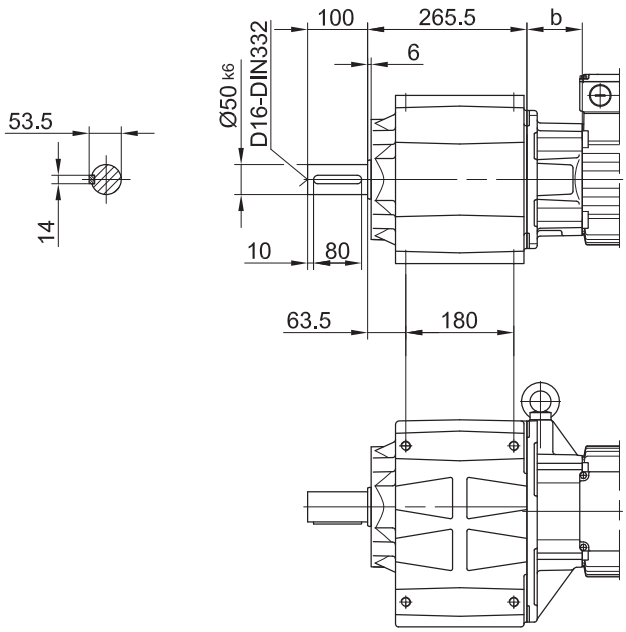

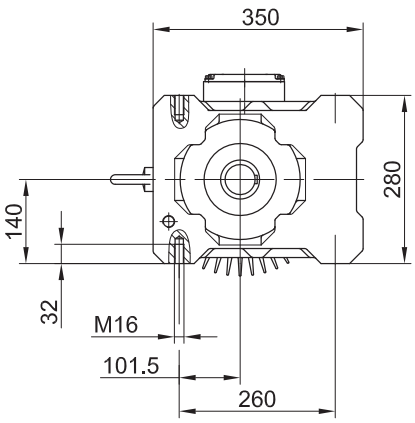

10

The actual gearbox design can vary from the geometry shown.

BG70 - BG70Z

Fussausführung mit Durchgangslöchern

Code -11/

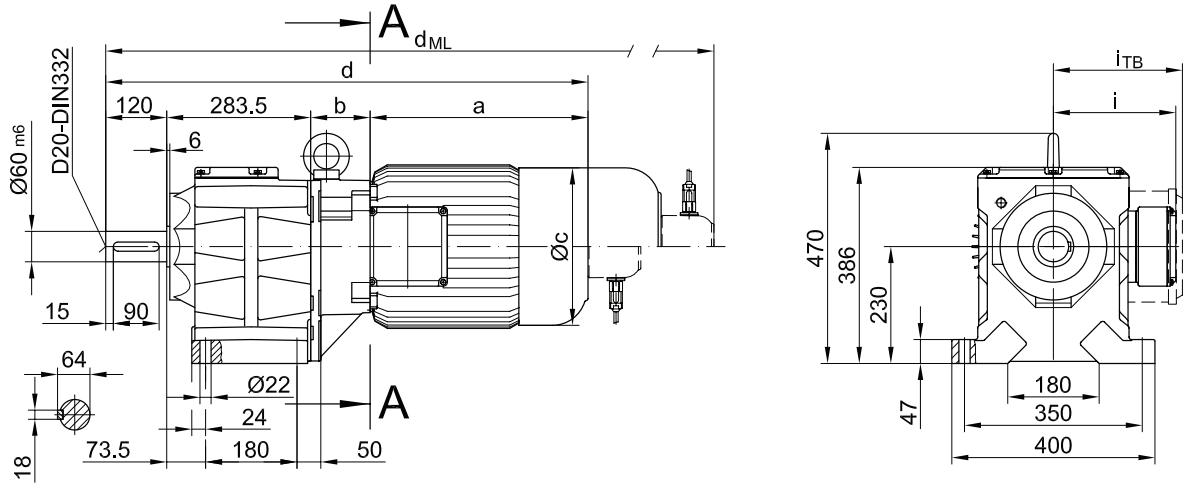

Flanschmasse

BG70(Z)	k	l	m	n	o	q	s	t	D_7	D_{ML7}
Standard -37/	350	300	250_{h6}	20	17.5	314	5	120	d+30.5	d_{ML}+30.5
klein -27/	300	265	230_{j6}	20	13.5	322	4	112	d+30.5	d_{ML}+30.5

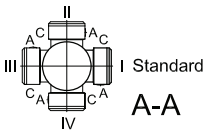

Typ	a	b	c	d	i	Ausführung mit Motoranbauten				
						i_{TB}	ES../ZS..	G	ES../ZS..-G	RR/RL
							d_{ML}	d_{ML}	d_{ML}	d_{ML}
BG70Z-../D..08..	200	202	156	805	115	149.5	871	912	979	871
BG70-../D..09..	251	83.5	181	739	124	164	826	846	933	826
BG70Z-../D..09..	251	216.5	181	872	124	164	859	979	1066	959
BG70-../D..11..	319	90	228	813	181	185	909	920	1016	905
BG70Z-../D..11..	319	223	228	946	181	185	1042	1053	1149	1042
BG70-../D..13..	393	103	266	900	217	217	1008	1007	1115	1008
BG70Z-../D..13..	393	236	266	1033	217	217	1141	1140	1248	1141
BG70-../D..16..	429	117	322	950	243	243	1094	1058	1202	1094
BG70Z-../D..16..	429	250	322	1083	243	243	1227	1191	1335	1227
BG70-../D..18..	528	139	368	1070	288	288	1219	1178	1327	1219

The actual gearbox design can vary from the geometry shown.

BG70 - BG70Z

Flansch mit Durchgangslöchern

Code -37/
(Code -27/)

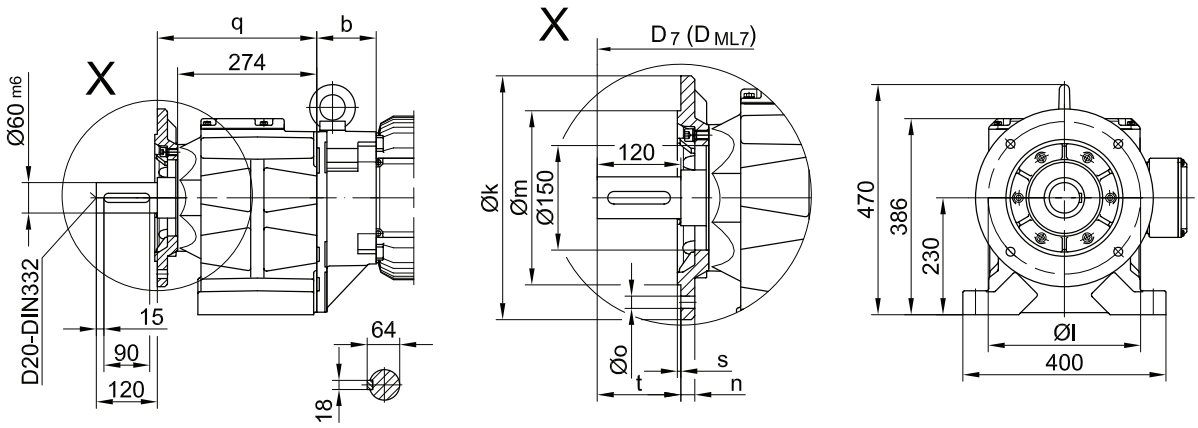

Flansch mit Gewindelöchern

Code -71/

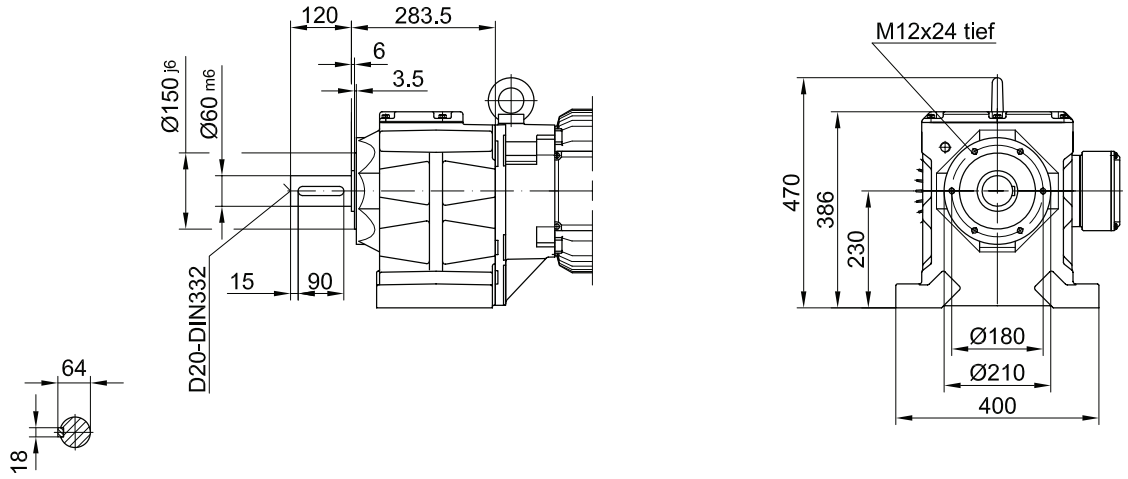

10

The actual gearbox design can vary from the geometry shown.

BG80 - BG80Z

Fussausführung mit Durchgangslöchern

Code -11/

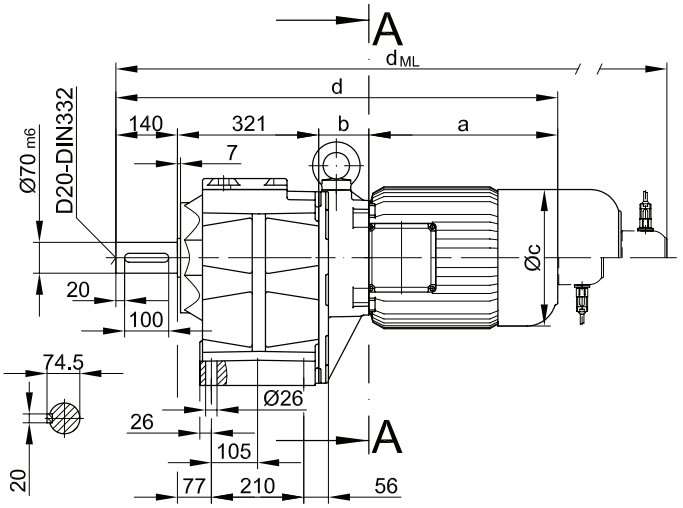

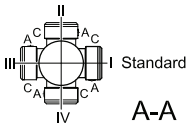

A-A

Flanschmasse

BG80(Z)	k	l	m	n	o	q	s	t	D_7	D_{ML7}
Standard -37/	400	350	300	20	4 x 17.5	345	5	140	d+24	d_{ML}+24
klein -27/	350	300	250	20	4 x 17.5	345	5	140	d+24	d_{ML}+24
groß -47/	450	400	350	22	8 x 17.5	355	5	130	d+24	d_{ML}+24

Typ	a	b	c	d	i	Ausführung mit Motoranbauten				
						i_{TB}	ES../ZS..	G	ES../ZS..-G	RR/RL
							d_{ML}	d_{ML}	d_{ML}	d_{ML}
BG80Z-../D..09..	251	252.5	181	965	124	164	1052	1072	1159	1052
BG80-../D..11..	319	87	228	867	181	181	963	974	1079	962
BG80Z-../D..11..	319	259	228	1039	181	181	1135	1146	1242	1135
BG80-../D..13..	393	100	266	954	217	217	1062	1061	1169	1062
BG80Z-../D..13..	393	272	266	1126	217	217	1234	1233	1341	1234
BG80-../D..16..	429	114	322	1004	243	243	1148	1112	1255	1148
BG80Z-../D..16..	429	286	322	1176	243	243	1320	1284	1428	1320
BG80-../D..18..	528	136	368	1125	288	288	1274	1233	1382	1274

The actual gearbox design can vary from the geometry shown.

BG80 - BG80Z

Flansch mit Durchgangslöchern

Code -37/
(Code -27/)
(Code -47/)

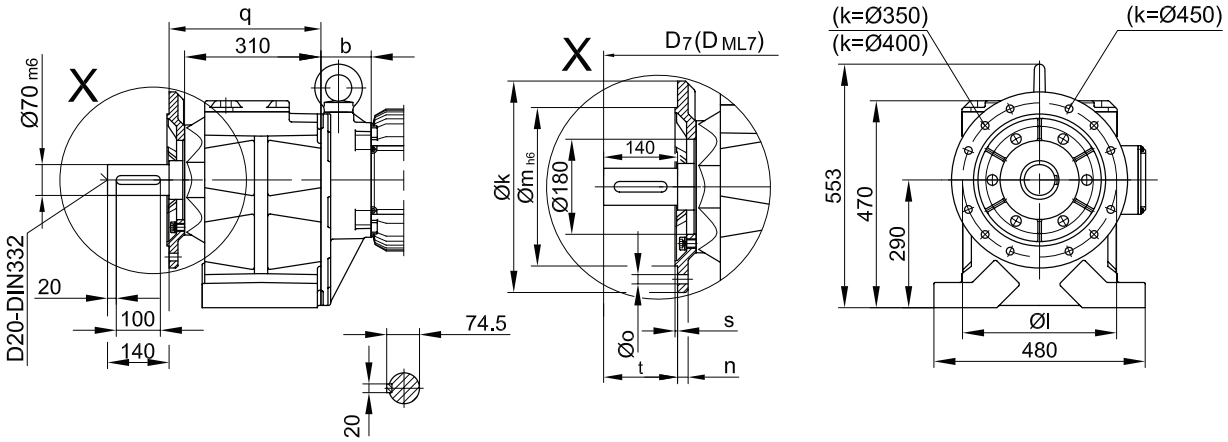

Flansch mit Gewindelöchern

Code -71/

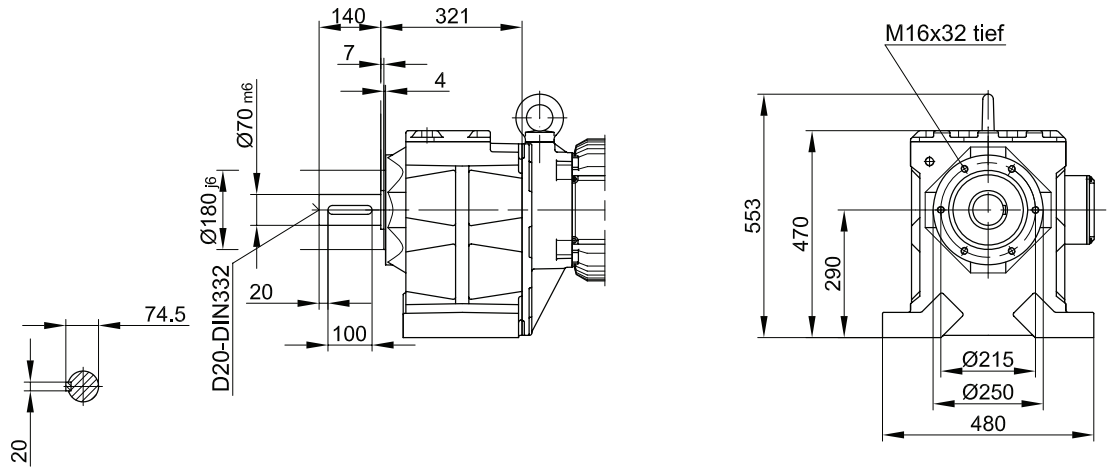

10

The actual gearbox design can vary from the geometry shown.

BG90 - BG90Z

Fussausführung mit Durchgangslöchern

Code -11/

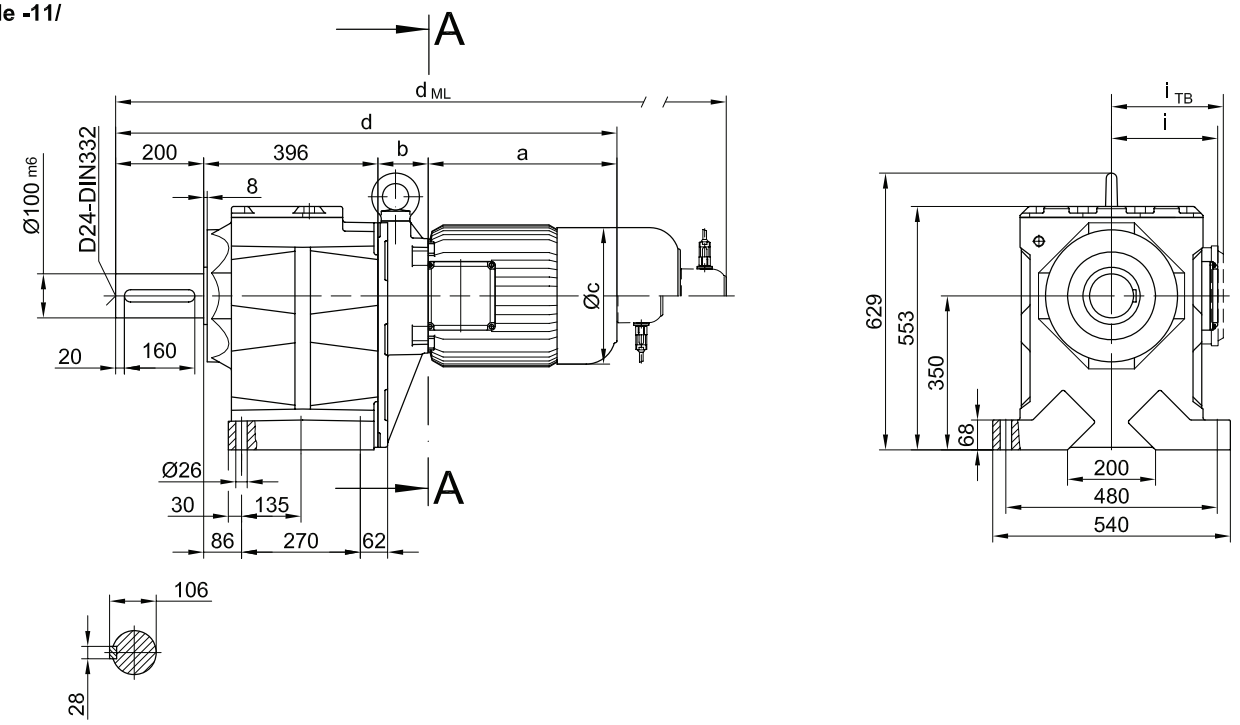

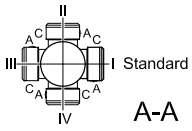

Flanschmasse

BG90(Z)	k	l	m	n	o	q	s	t	D_7	D_{ML7}
Standard -37/	450	400	350	22	17.5	439	5	200	d+43	d_{ML}+43
gross -47/	550	500	450	22	17.5	444	5	195	d+43	d_{ML}+43

Typ	a	b	c	d	i	Ausführung mit Motoranbauten				
						i_{TB}	ES../ZS..	G	ES../ZS..-G	RR/RL
							d_{ML}	d_{ML}	d_{ML}	d_{ML}
BG90Z-../D..09..	251	267	181	1114	124	124	1201	1221	1308	1201
BG90Z-../D..11..	319	273.5	228	1189	181	181	1285	1296	1392	1285
BG90-../D..13..	393	100	266	1089	217	217	1197	1196	1304	1197
BG90Z-../D..13..	393	286.5	266	1276	217	217	1384	1383	1491	1384
BG90-../D..16..	429	114	322	1139	243	243	1283	1247	1351	1283
BG90Z-../D..16..	429	300.5	322	1326	243	243	1470	1434	1578	1470
BG90-../D..18..	528	136	368	1260	288	288	1409	1368	1517	1409
BG90Z-../D..18..	528	322.5	368	1446	288	288	1595	1554	1703	1595

The actual gearbox design can vary from the geometry shown.

BG90 - BG90Z

Flansch mit Durchgangslöchern

Code -37/
(Code -47/)

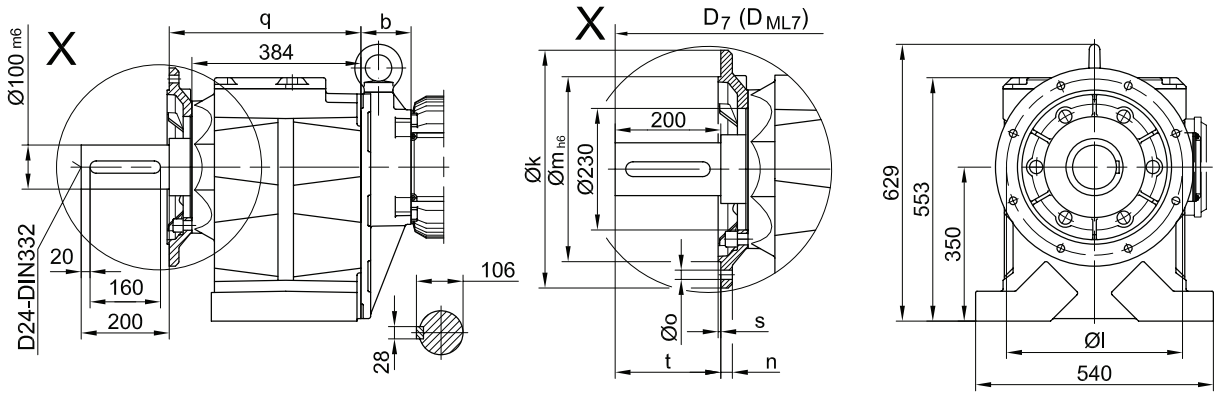

Flansch mit Gewindelöchern

Code -71/

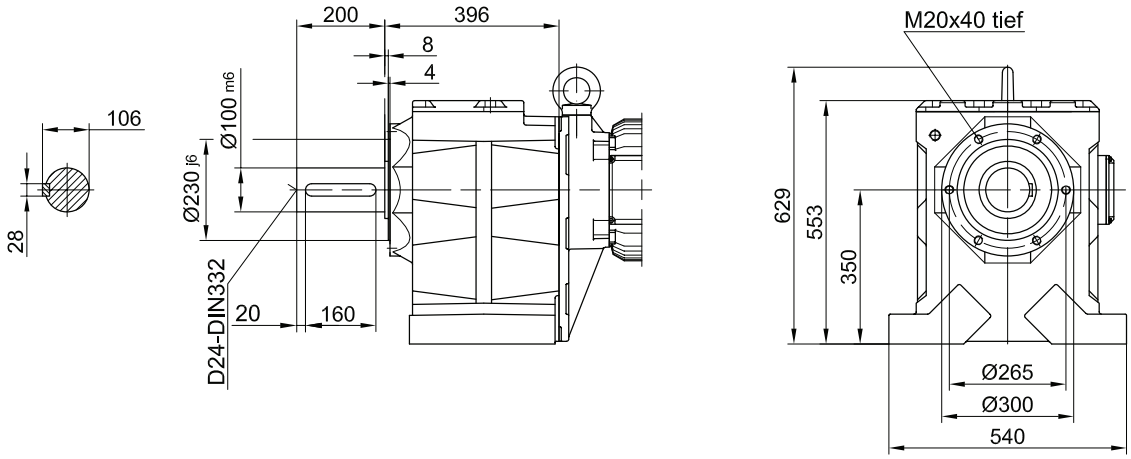

10

The actual gearbox design can vary from the geometry shown.

BG100 - BG100Z

Fussausführung mit Durchgangslöchern

Code -11/

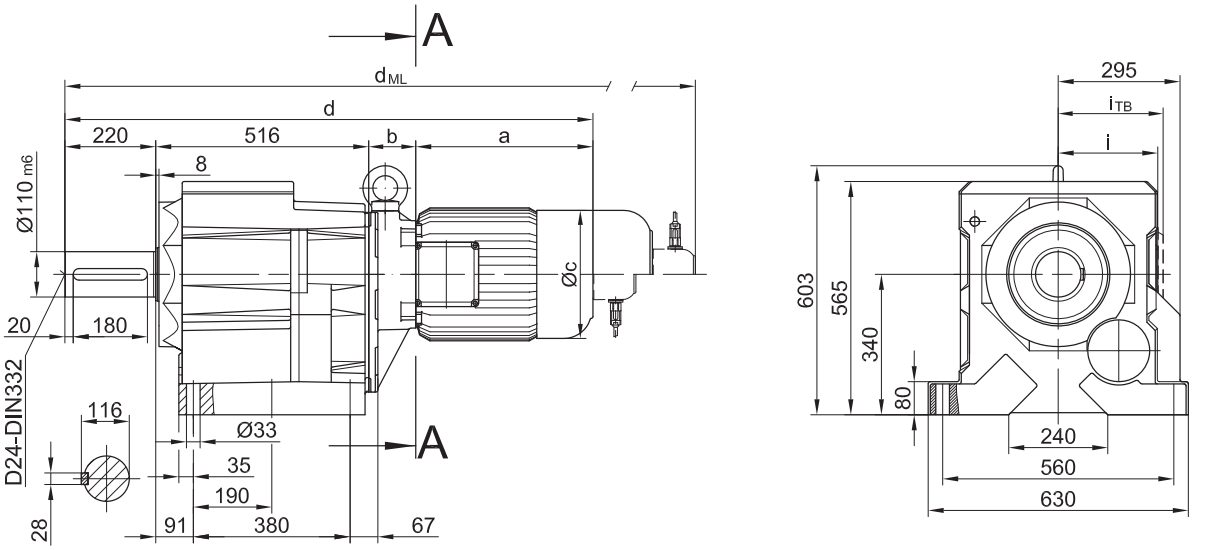

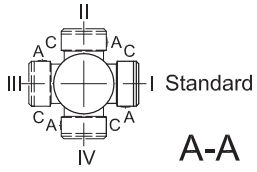

Flanschmasse

BG100(Z)	k	l	m	n	o	q	s	t	D_7	D_{ML7}
Standard -37/	550	500	450	22	17.5	558	5	220	d+42	d_{ML}+42
gross -47/	660	600	550	25	22	552	6	226	d+42	d_{ML}+42

Typ	a	b	c	d	i	Ausführung mit Motoranbauten				
						i_{TB}	ES../ZS..	G	ES../ZS..-G	RR/RL
							d_{ML}	d_{ML}	d_{ML}	d_{ML}
BG100Z-../D..09..	251	252.5	181	1239	124	164	1326	1346	1443	1326
BG100-../D..11..	319	87	228	1142	181	181	1238	1249	1345	1238
BG100Z-../D..11..	319	259	228	1314	181	181	1410	1421	1517	1410
BG100-../D..13..	393	100	266	1229	217	217	1337	1336	1444	1337
BG100Z-../D..13..	393	272	266	1401	217	217	1509	1508	1616	1509
BG100-../D..16..	429	114	322	1279	243	243	1423	1387	1531	1423
BG100Z-../D..16..	429	286	322	1451	243	243	1595	1559	1703	1595
BG100-../D..18..	528	136	368	1400	288	288	1549	1508	1657	1549

The actual gearbox design can vary from the geometry shown.

BG100 - BG100Z

Flansch mit Durchgangslöchern

Code -37/
(Code -47/)

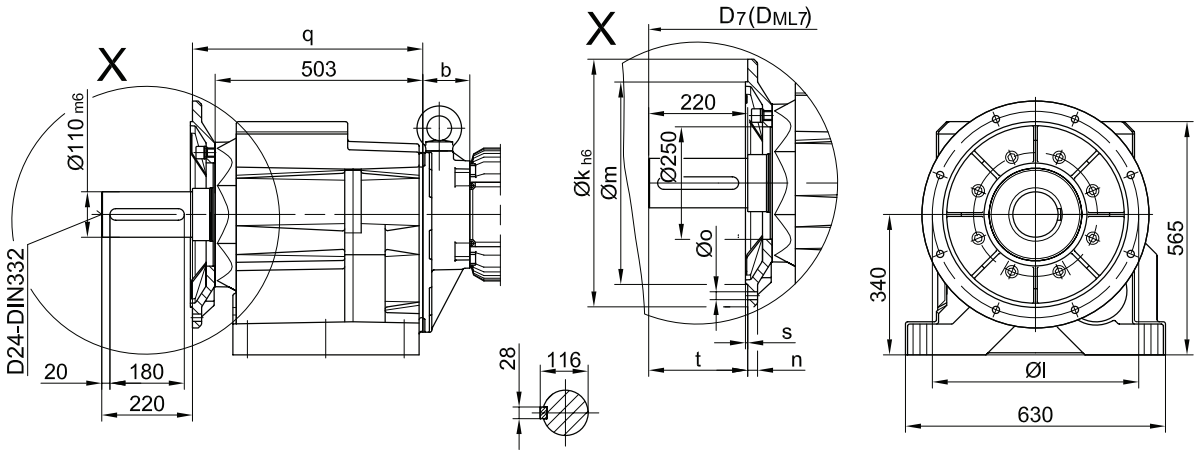

Flansch mit Gewindelöchern

Code 71/

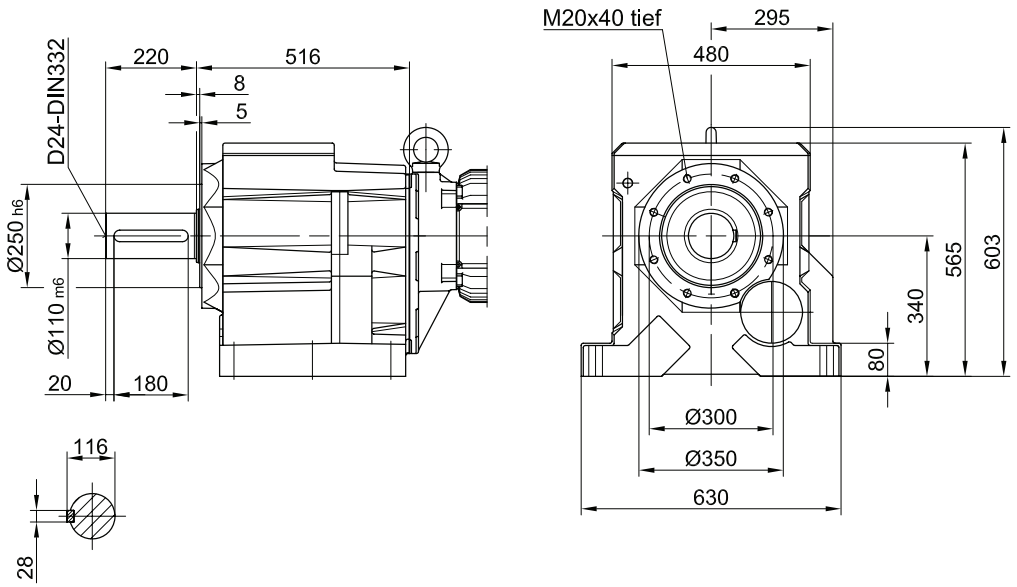

10

The actual gearbox design can vary from the geometry shown.

BG06G04

Fussausführung

Code -11/

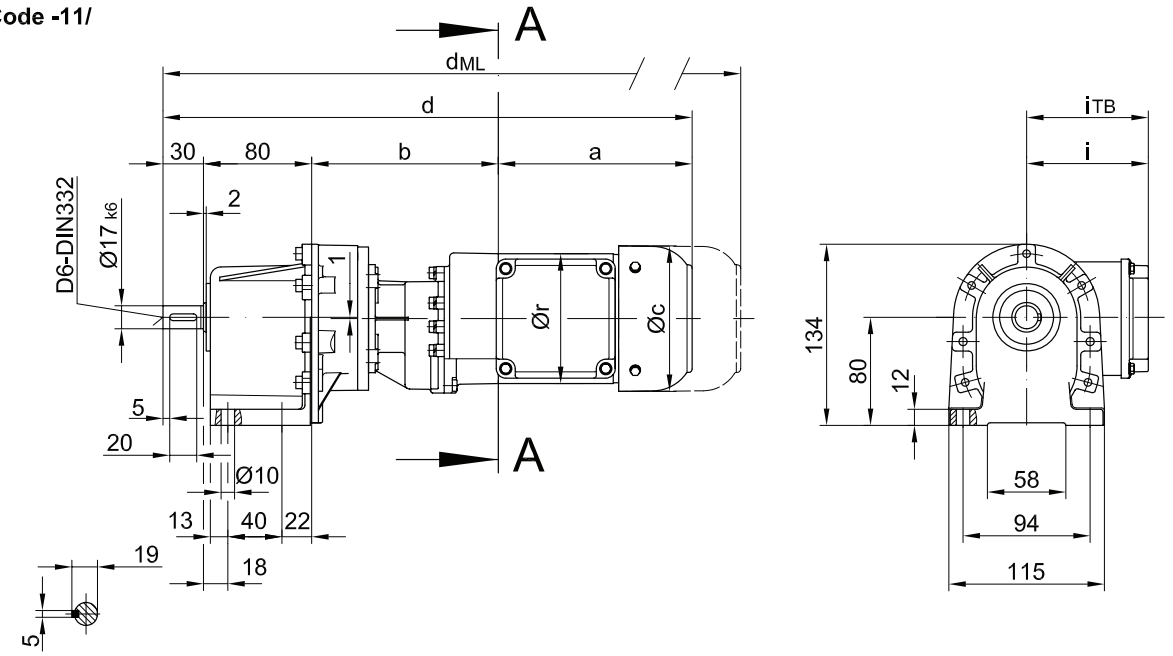

Flansch mit Durchgangslöchern

Code -31/

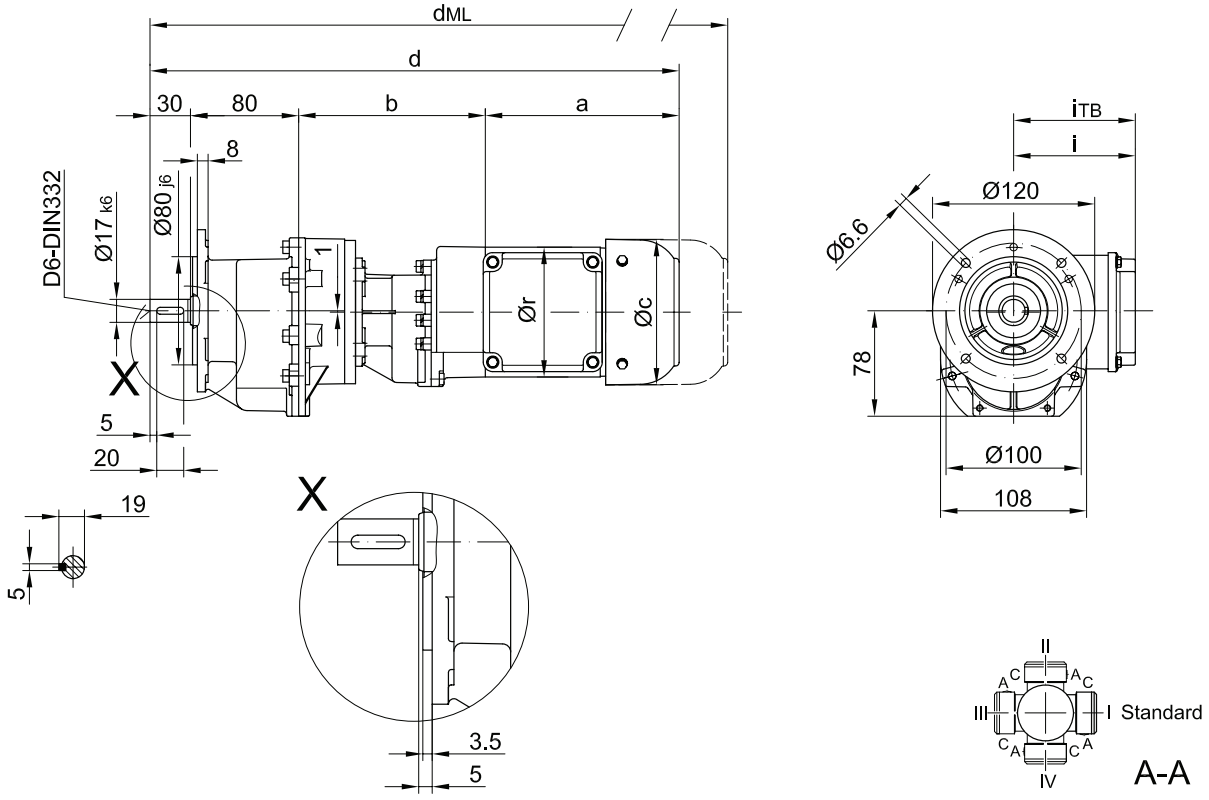

Typ	a	b	c	d	i	r	Ausführung mit Motoranbauten				
							i_{TB}	ES../ZS..	G	ES../ZS..-G	RR/RL
								d_{ML}	d_{ML}	d_{ML}	d_{ML}
BG06G04-../D04..	143	135	111	388	90	96	124.5	424	450.5	486.5	-

The actual gearbox design can vary from the geometry shown.

BG10G06

Fussausführung mit Durchgangslöchern

Code -11/

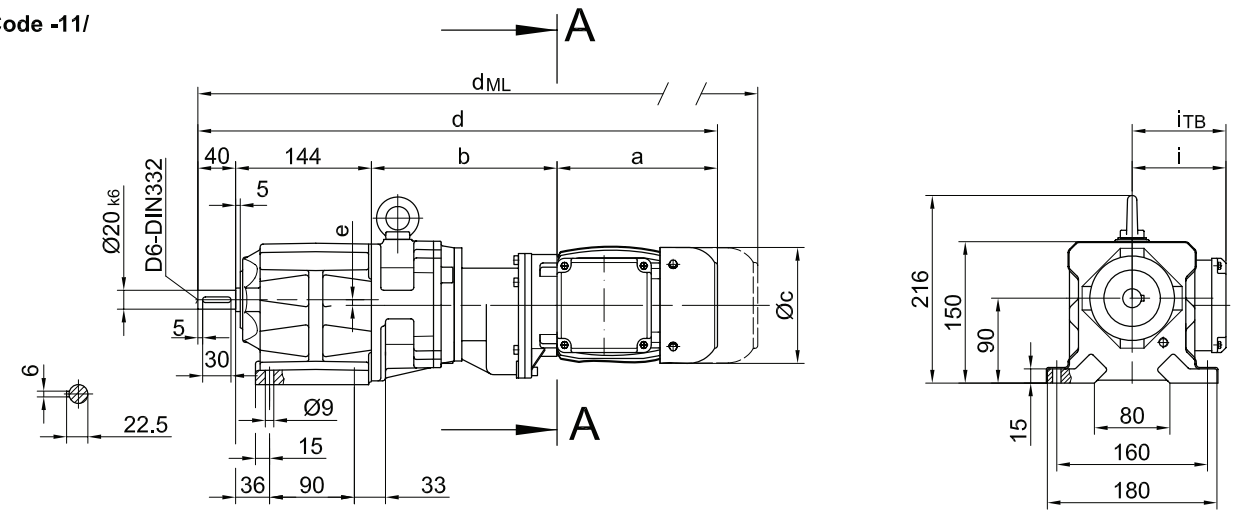

Flansch mit Durchgangslöchern

Code -37/
(Code -27/)

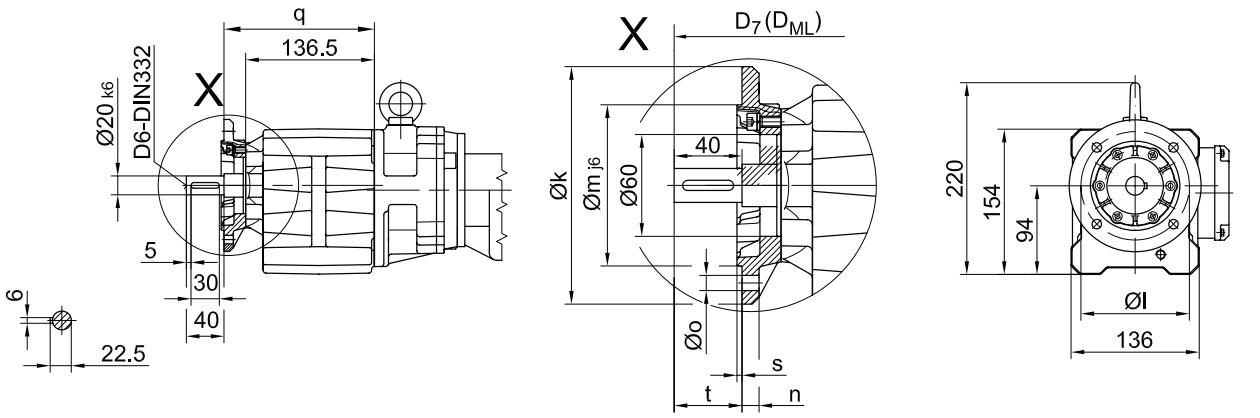

Flanschmasse

BG10G..	k	l	m	n	o	q	s	t	D_7	D_{ML7}
Standard -37/	140	115	95	10	9	159.5	3	40	d+15.5	d_{ML}+15.5
klein -27/	120	100	80	8	6.6	154.5	3	45	d+15.5	d_{ML}+15.5

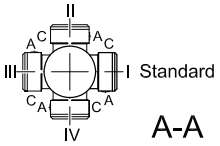

Typ	a	b	c	d	e	i	Ausführung mit Motoranbauten				
							i_{TB}	ES../ZS..	G	ES../ZS..-G	RR/RL
								d_{ML}	d_{ML}	d_{ML}	d_{ML}
BG10G06-../D04..	143	195	111	522	6	90	124.5	575	584.5	637.5	-
BG10G06-../D05..	170	197	123	552	6	100	129.5	604	655	707	-
BG10G06-../D06..	170	197	123	552	6	100	131.5	605	655	707	-
BG10G06-../D07..	190	197	123	572	6	100	131.5	624	675	727	-
BG10G06-../D..08..	200	241	156	625	6	115	149.5	691	732	798	691

The actual gearbox design can vary from the geometry shown.

BG10G06

Flansch mit Gewindelöchern

Code -71/

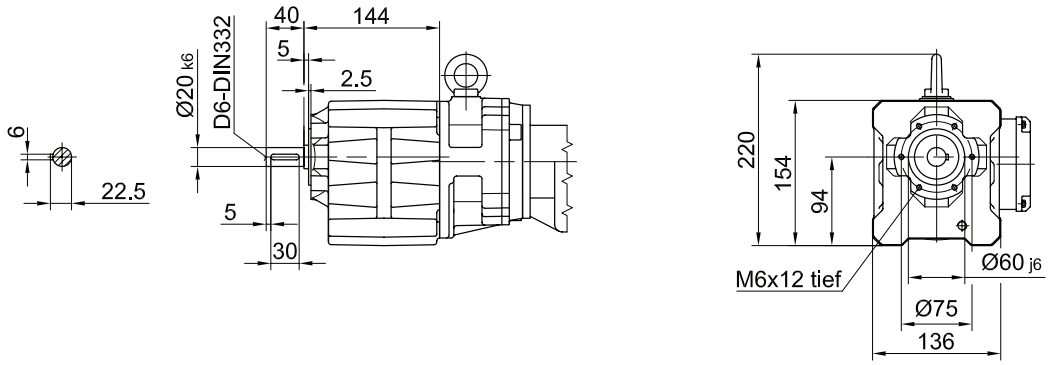

Fuss mit Gewindelöchern links und rechts

Code -61LR/

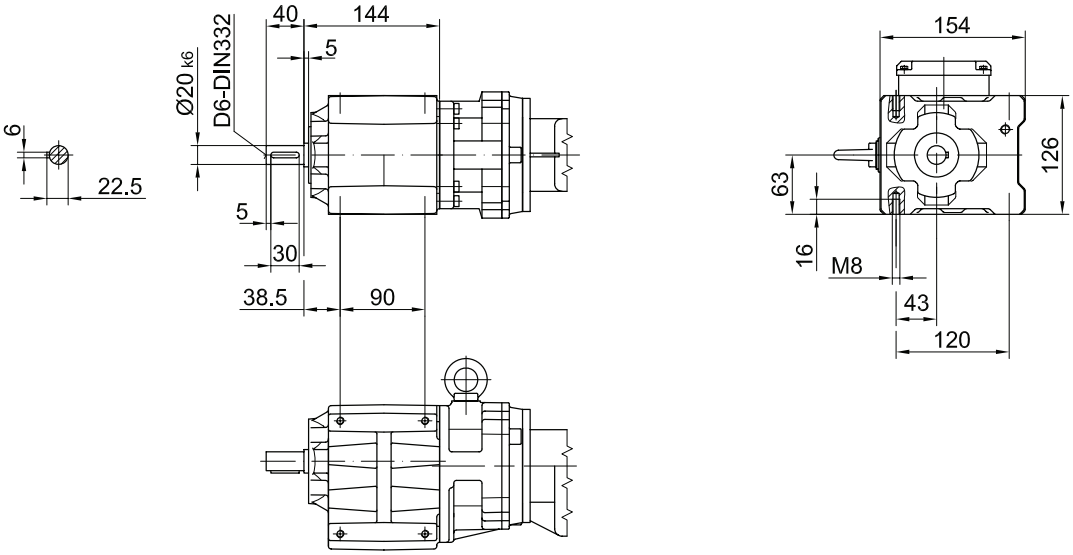

Fussplatte links

Code -91L/

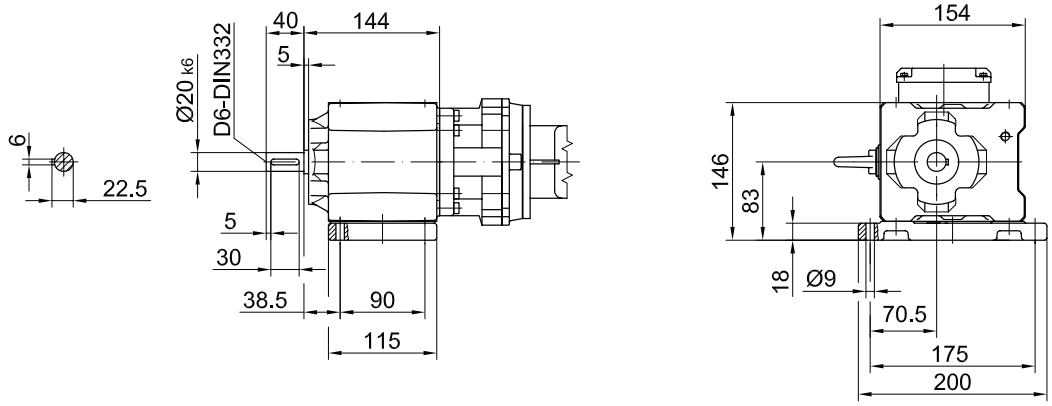

The actual gearbox design can vary from the geometry shown.

BG10XG06

Fussausführung mit Durchgangslöchern

Code -11/

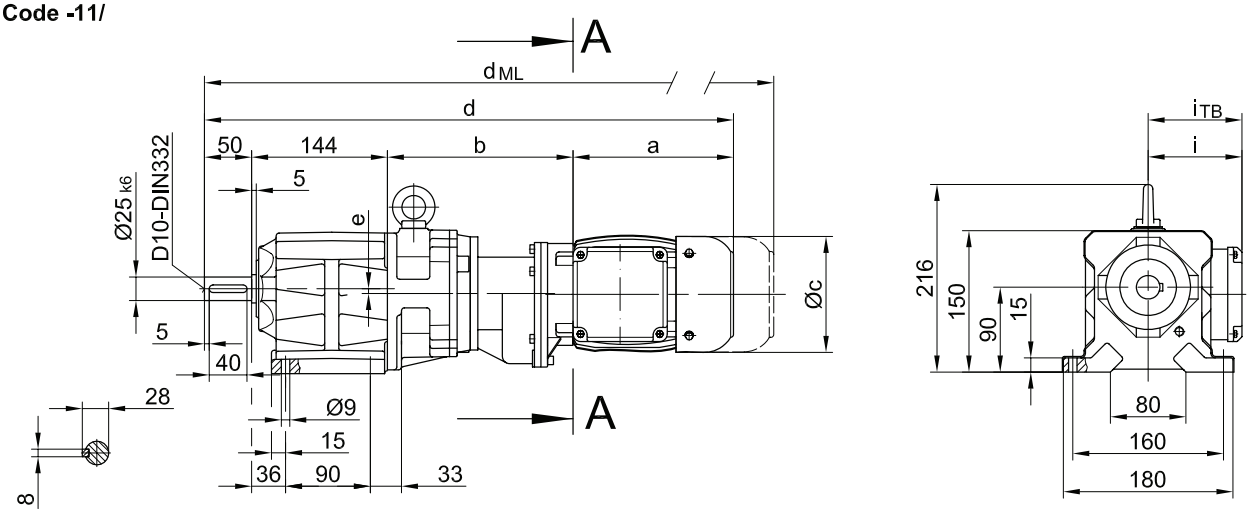

Flansch mit Durchgangslöchern

Code -37/
(Code -27/)

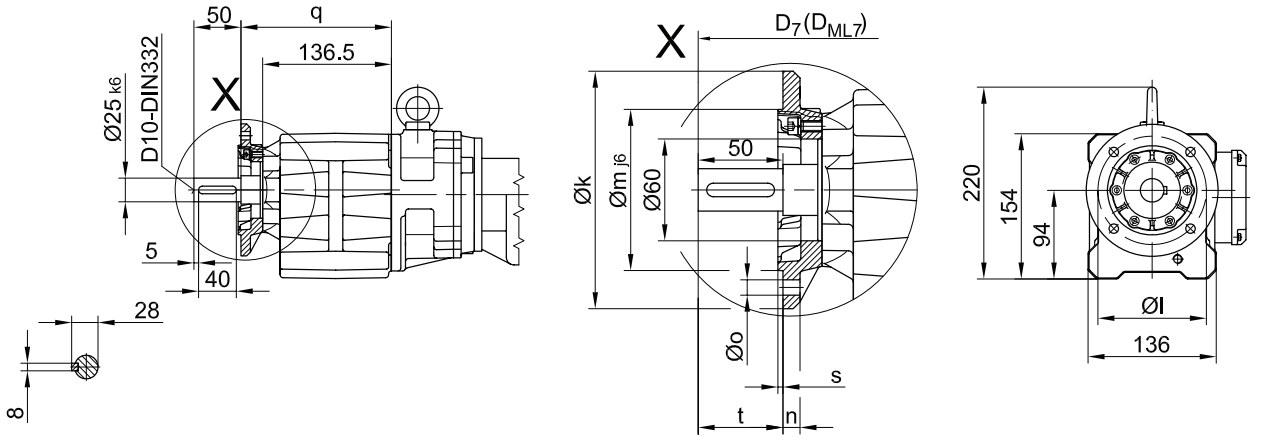

Flanschmasse

BG10G..	k	l	m	n	o	q	s	t	D_7	D_{ML7}
Standard -37/	140	115	95	10	9	159.5	3	50	d+15.5	d_{ML}+15.5
klein -27/	120	100	80	8	6.6	154.5	3	55	d+15.5	d_{ML}+15.5

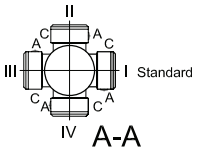

Typ	a	b	c	d	e	i	Ausführung mit Motoranbauten				
							i_{TB}	ES../ZS..	G	ES../ZS..-G	RR/RL
								d_{ML}	d_{ML}	d_{ML}	d_{ML}
BG10XG06-../D04..	143	195	111	532	6	90	124.5	575	584.5	637.5	-
BG10XG06-../D05..	170	197	123	562	6	100	129.5	604	655	707	-
BG10XG06-../D06..	170	197	123	562	6	100	131.5	604	655	707	-
BG10XG06-../D07..	190	197	123	582	6	100	131.5	624	675	727	-
BG10XG06-../D..08..	200	241	156	635	6	115	149.5	691	732	798	691

The actual gearbox design can vary from the geometry shown.

BG10XG06

Flansch mit Gewindelöchern

Code -71/

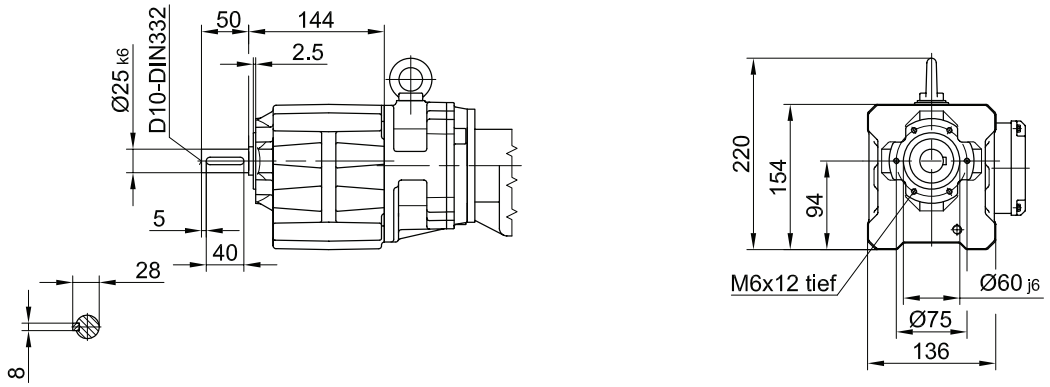

Fuss mit Gewindelöchern links und rechts

Code -61LR/

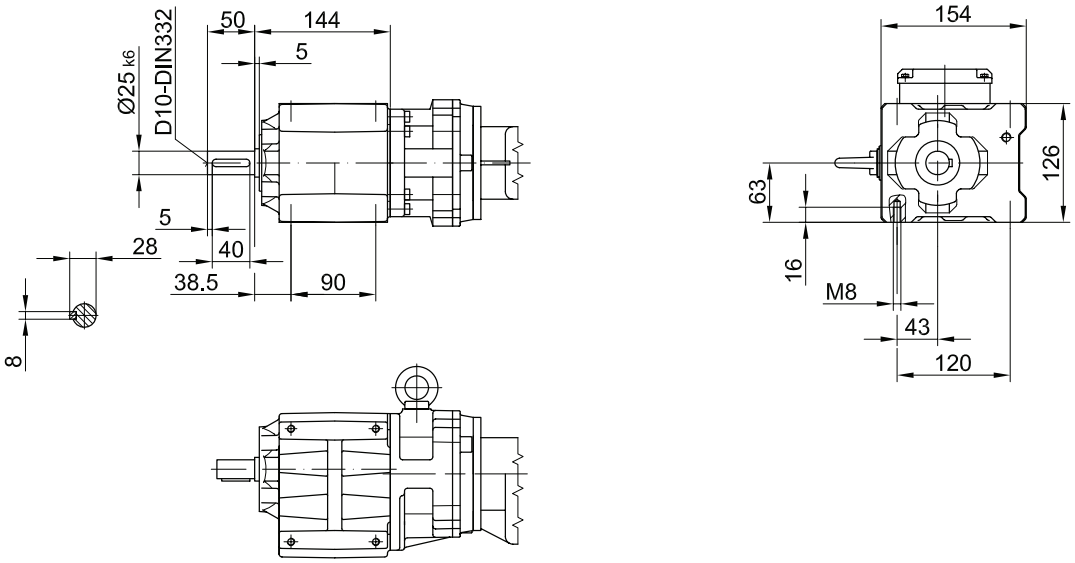

Fussplatte links

Code -91L/

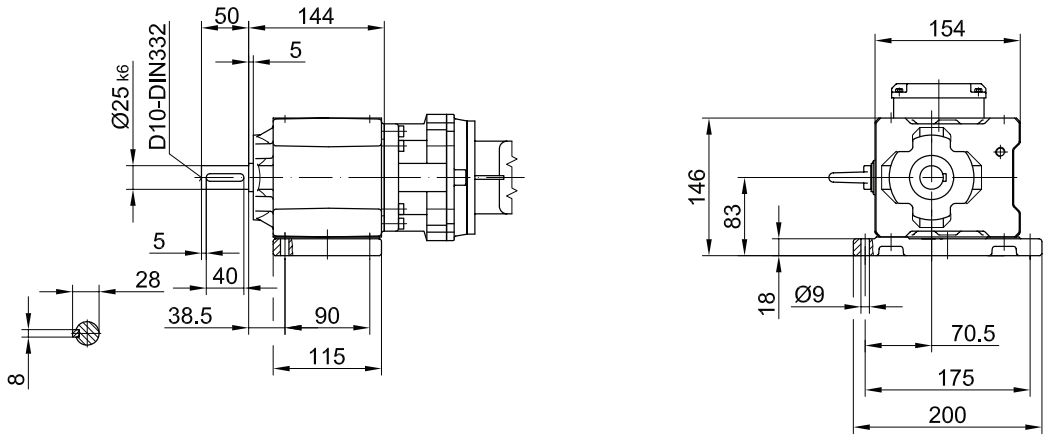

The actual gearbox design can vary from the geometry shown.

BG20G06

Fussausführung mit Durchgangslöchern

Code -11/

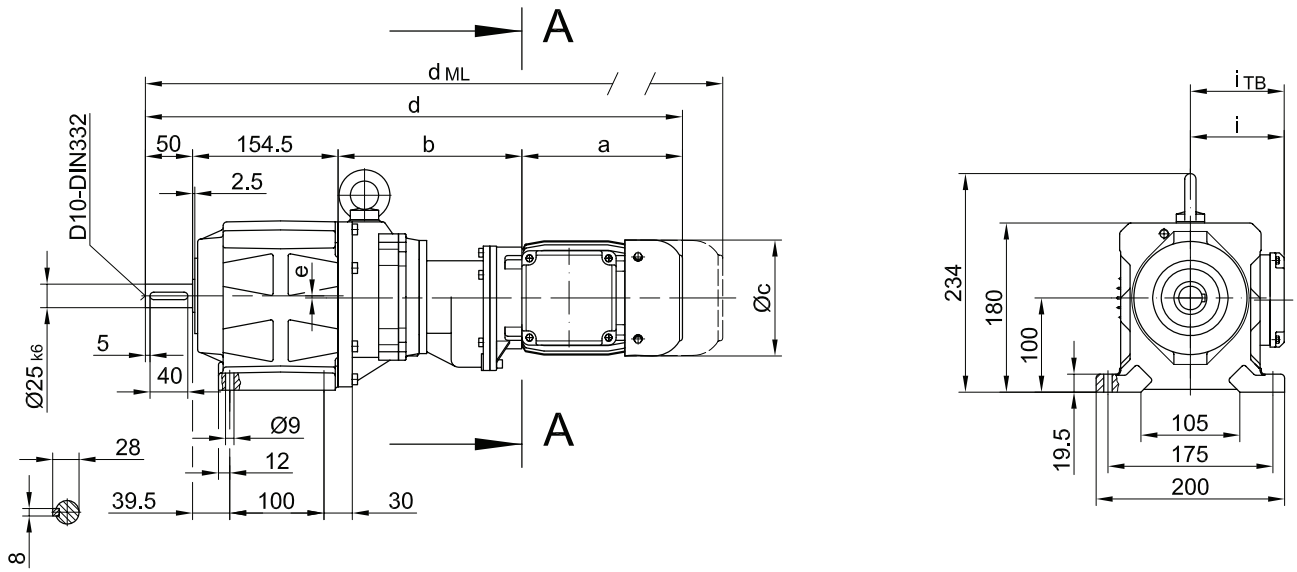

Flansch mit Durchgangslöchern

Code -37/
(Code -47/)

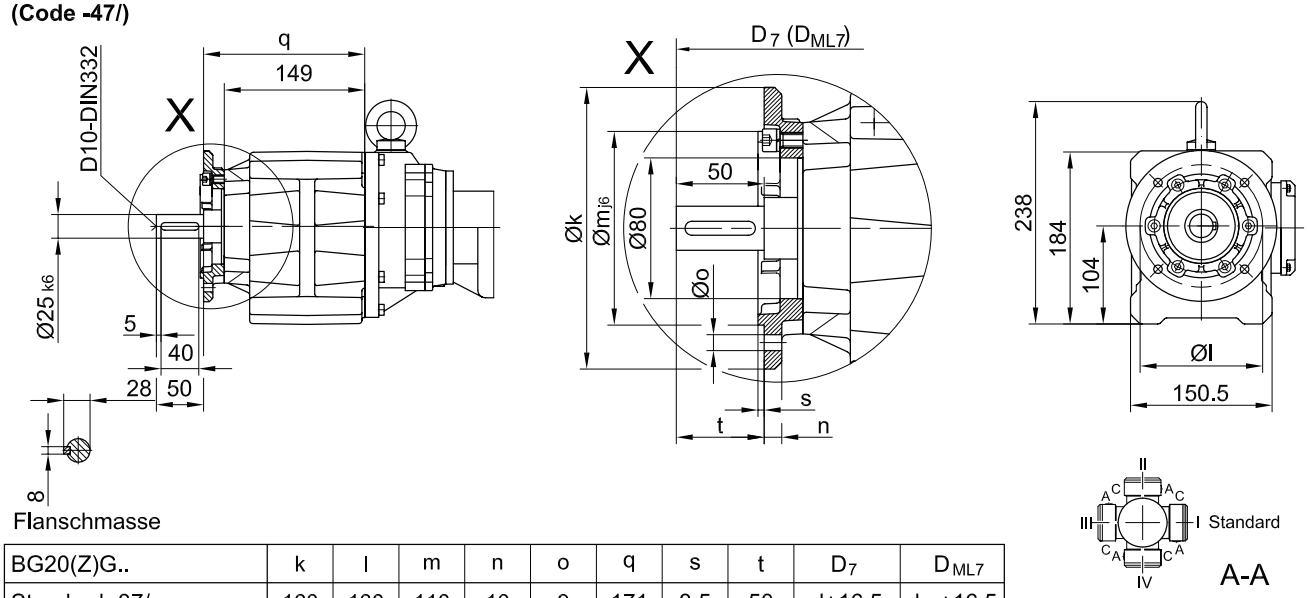

Flanschmasse

BG20(Z)G..	k	l	m	n	o	q	s	t	D_7	D_{ML7}
Standard -37/	160	130	110	10	9	171	3.5	50	d+16.5	d_{ML}+16.5
gross -47/	200	165	130	12	11	178	3.5	43	d+16.5	d_{ML}+16.5

Typ	a	b	c	d	e	i	i_{TB}	Ausführung mit Motoranbauten			
								ES../ZS..	G	ES../ZS..-G	RR/RL
								d_{ML}	d_{ML}	d_{ML}	d_{ML}
BG20G06-../D04..	143	193	111	541	2	90	124.5	584	603.5	646.5	-
BG20G06-../D05..	170	195	123	570	2	100	129.5	613	673	716	-
BG20G06-../D06..	170	195	123	570	2	100	131.5	613	673	716	-
BG20G06-../D07..	190	195	123	590	2	100	131.5	633	693	736	-
BG20G06-../D..08..	200	239	156	643	2	115	149.5	718	750	825	718

The actual gearbox design can vary from the geometry shown.

BG20G06

Flansch mit Gewindelöchern

Code -71/

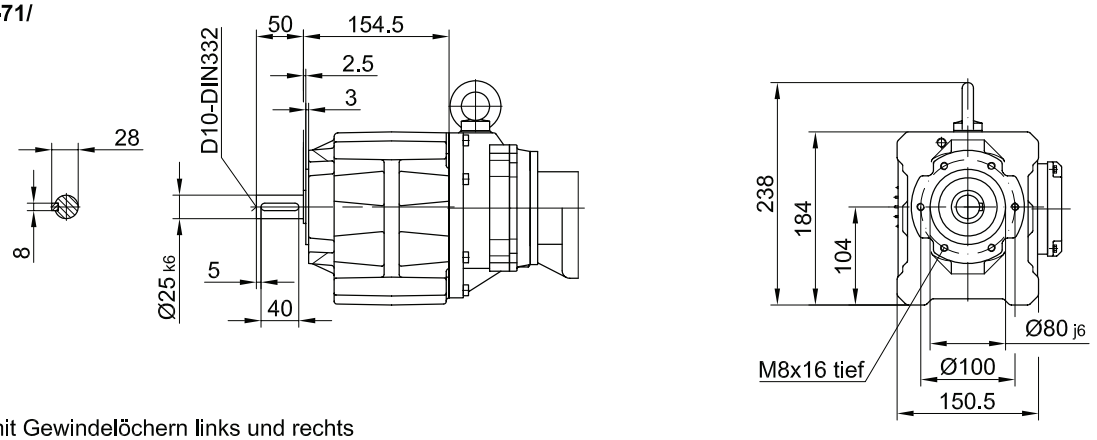

Fuss mit Gewindelöchern links und rechts

Code -61LR/

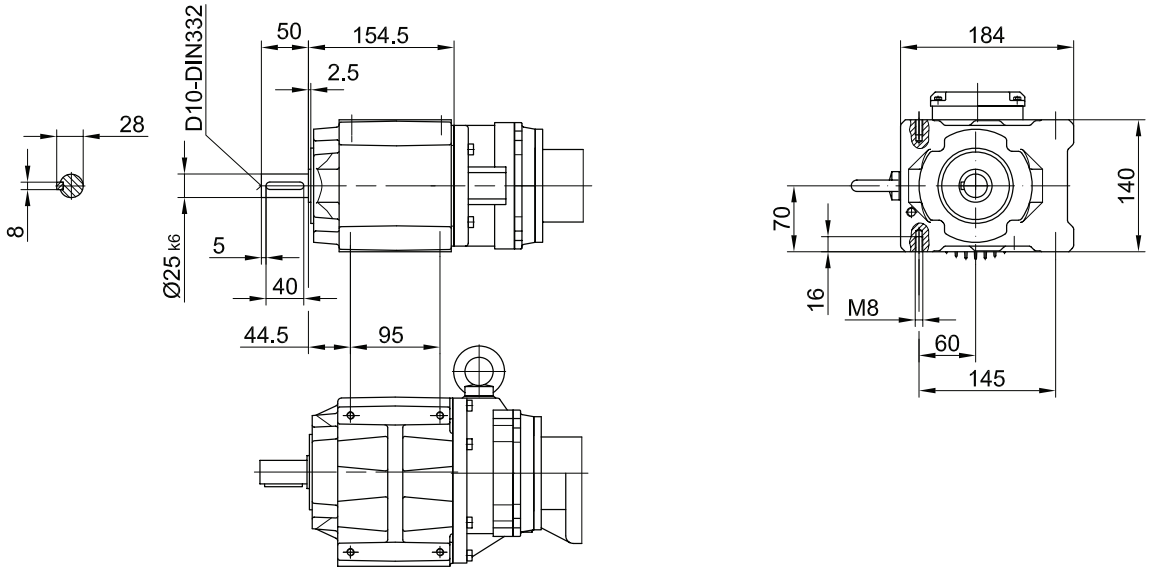

Fussausführung rechts mit Durchgangslöchern

Code -01R (-91L)

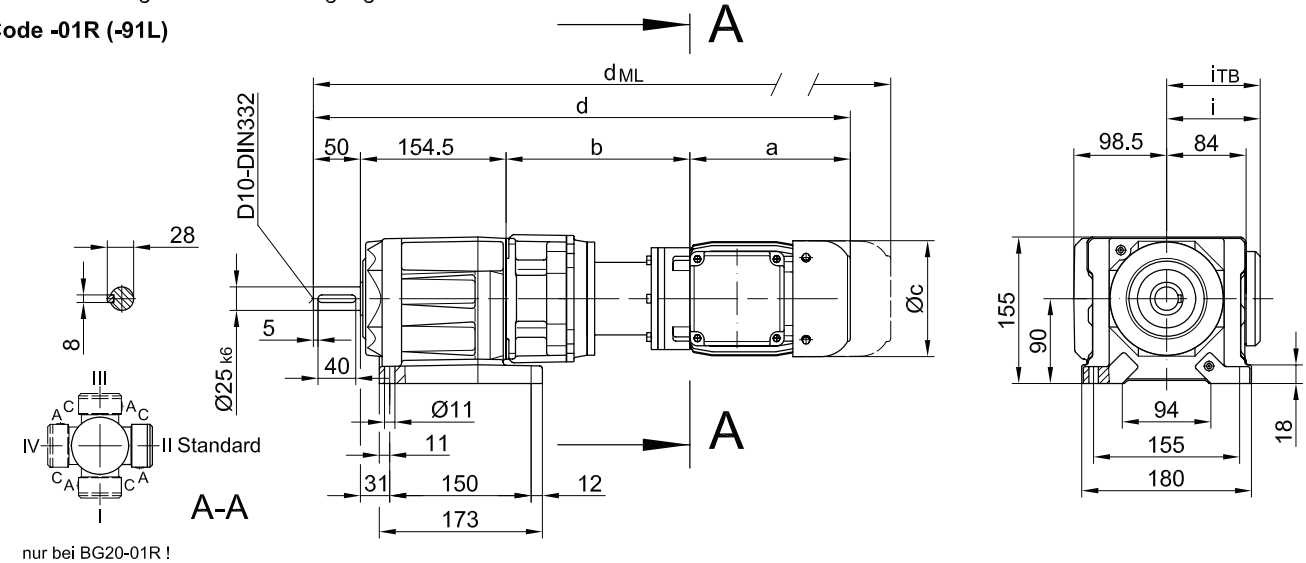

nur bei BG20-01R !

The actual gearbox design can vary from the geometry shown.

BG30G06

Fussausführung mit Durchgangslöchern

Code -11/

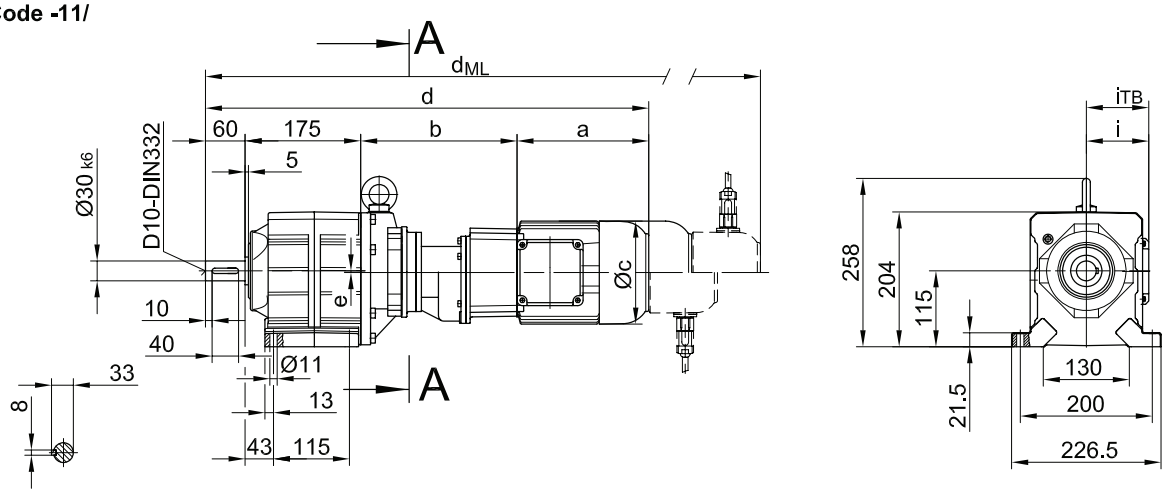

Flansch mit Durchgangslöchern

Code -37/
(Code -27/)

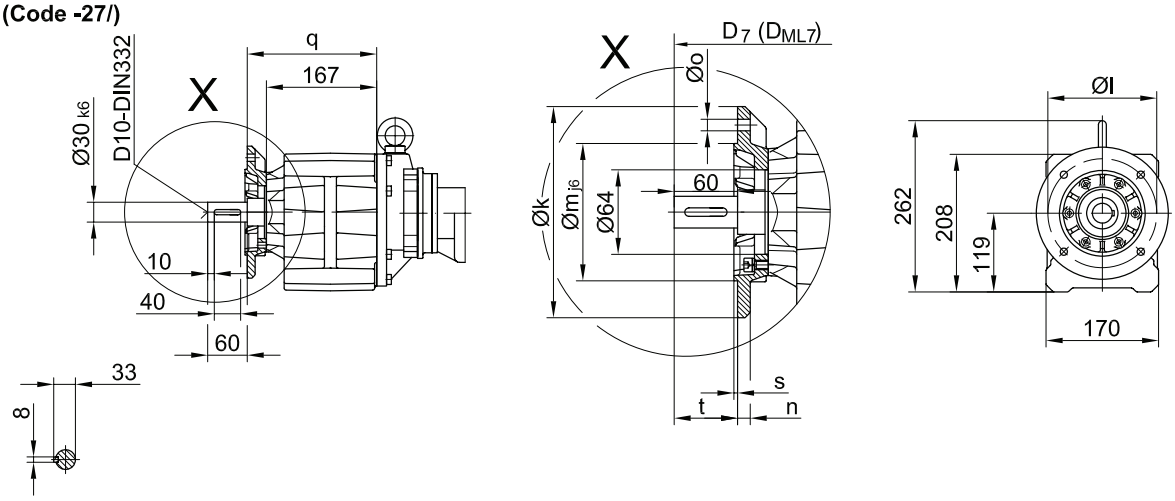

Flanschmasse

BG30G..	k	l	m	n	o	q	s	t	D_7	D_{ML7}
Standard -37/	200	165	130	12	11	196	3.5	60	d+21	d_{ML}+21
klein -27/	160	130	110	10	9	189	3.5	67	d+21	d_{ML}+21

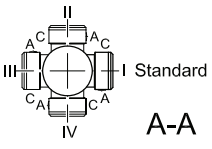

Typ	a	b	c	d	e	i	Ausführung mit Motoranbauten				
							i_{TB}	ES../ZS..	G	ES../ZS..-G	RR/RL
								d_{ML}	d_{ML}	d_{ML}	d_{ML}
BG30G06-../D04..	143	191	111	569	3	90	124.5	612	631.5	674.5	-
BG30G06-../D05..	170	193	123	599	3	100	129.5	641	702	644	-
BG30G06-../D06..	170	193	123	599	3	100	131.5	641	702	644	-
BG30G06-../D07..	190	193	123	619	3	100	131.5	661	722	664	-
BG30G06-../D..08..	200	237	156	672	3	115	149.5	738	779	845	738

The actual gearbox design can vary from the geometry shown.

BG30G06

Flansch mit Gewindelöchern

Code -71/

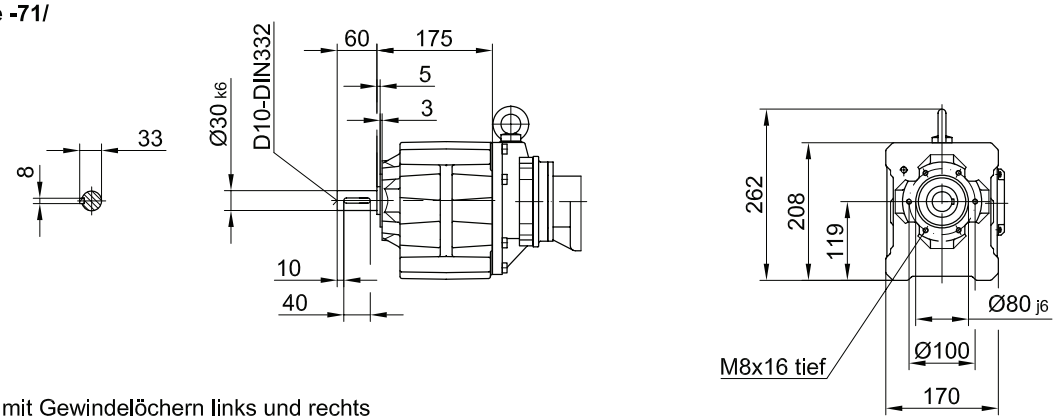

Fuss mit Gewindelöchern links und rechts

Code -61LR/

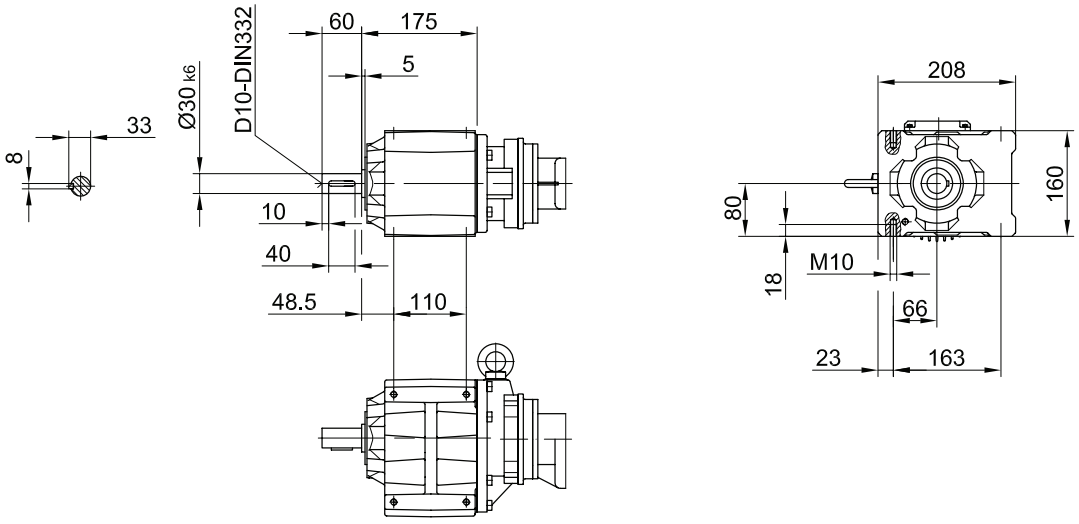

Fussplatte links

Code -91L/

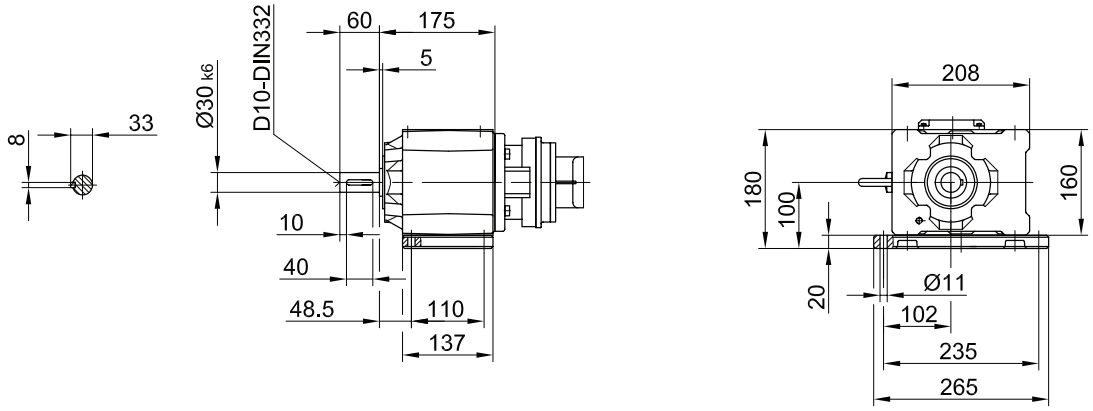

The actual gearbox design can vary from the geometry shown.

BG40G10

Fussausführung mit Durchgangslöchern

Code -11/

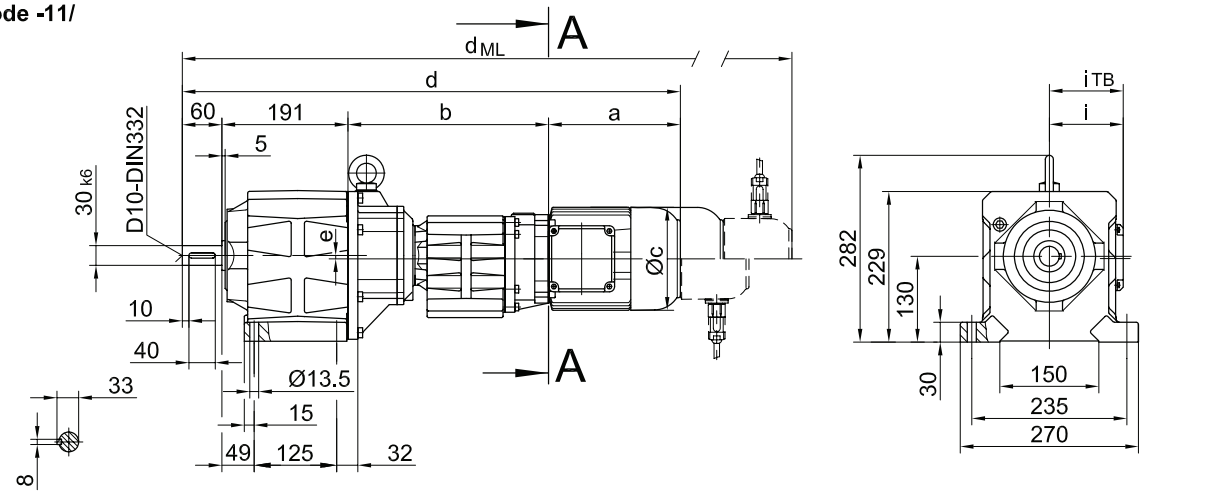

Flansch mit Durchgangslöchern

Code -37/
(Code -47/)

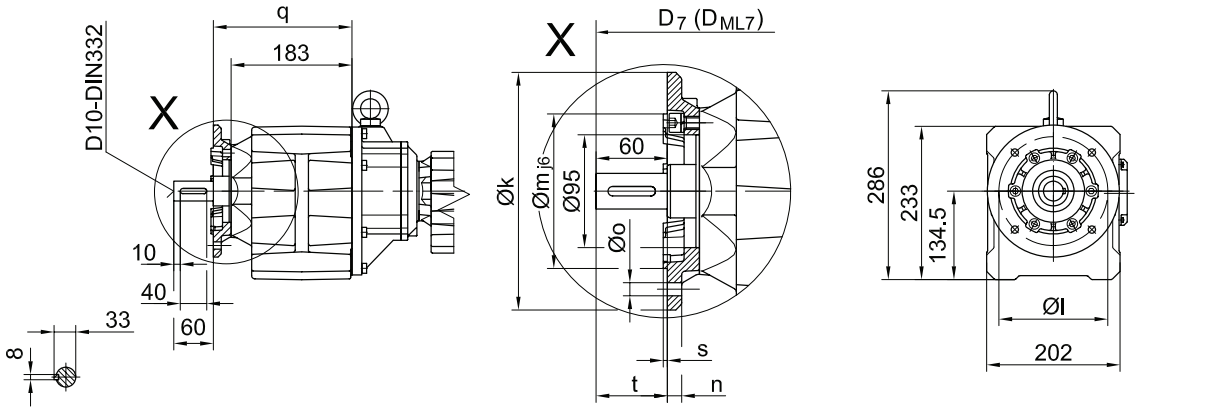

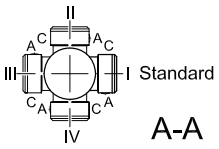

Flanschmasse

BG40G..	k	I	m	n	o	q	s	t	D_7	D_{ML7}
Standard -37/	200	165	130	12	11	210	3.5	60	d+19	d_{ML}+19
gross -47/	250	215	180	16	13.5	219	4	51	d+19	d_{ML}+19

Typ	a	b	c	d	e	i	Ausführung mit Motoranbauten				
							i_{TB}	ES../ZS..	G	ES../ZS..-G	RR/RL
								d_{ML}	d_{ML}	d_{ML}	d_{ML}
BG40G10-../D05..	170	300	123	722	5	100	129.5	764	825	867	-
BG40G10-../D06..	170	300	123	722	5	100	131.5	764	825	867	-
BG40G10-../D07..	190	300	123	742	5	100	131.5	784	845	887	-
BG40G10-../D..08..	200	304	156	755	5	115	149.5	821	862	928	821
BG40G10-../D..09..	251	318.5	181	820	5	124	164	907	927	1014	907

The actual gearbox design can vary from the geometry shown.

BG40G10

Flansch mit Gewindelöchern

Code -71/

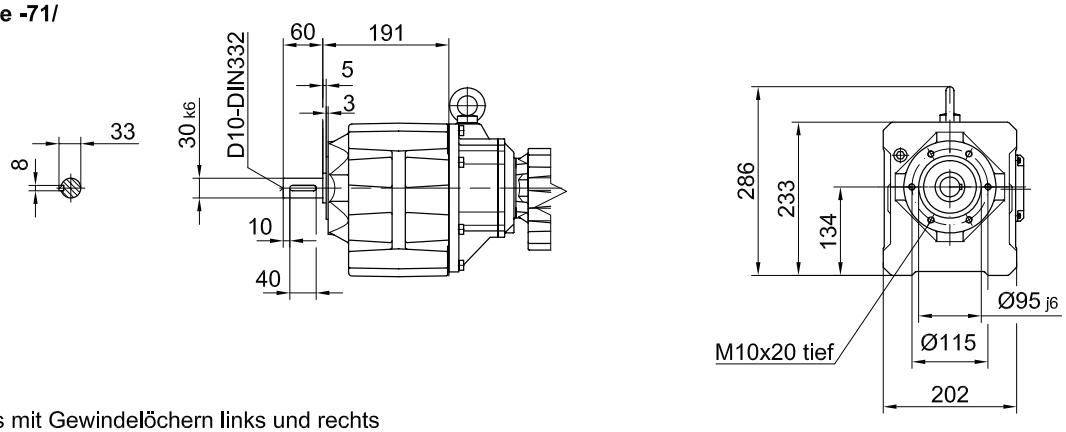

Fuss mit Gewindelöchern links und rechts

Code -61LR/

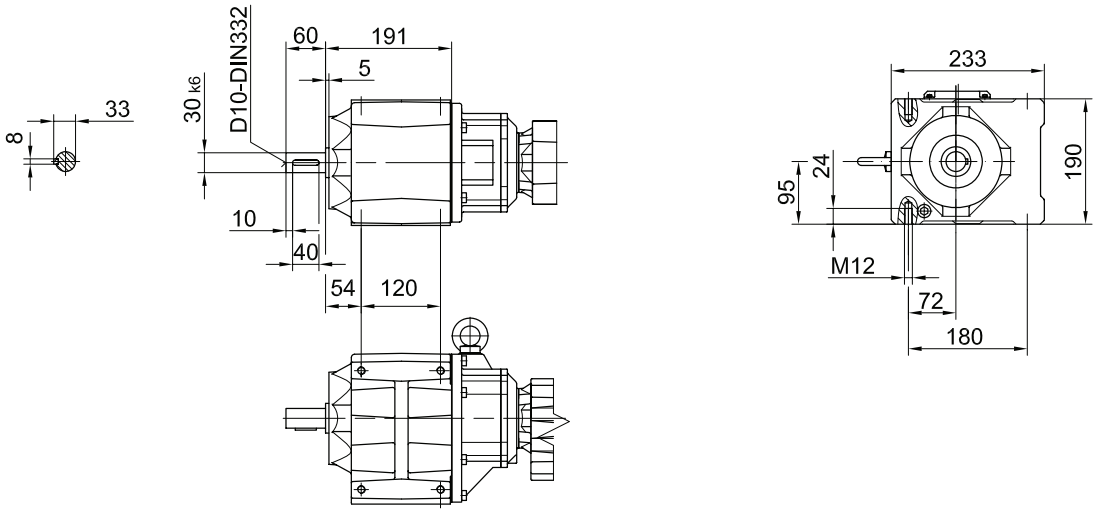

Fussplatte links

Code -91L/

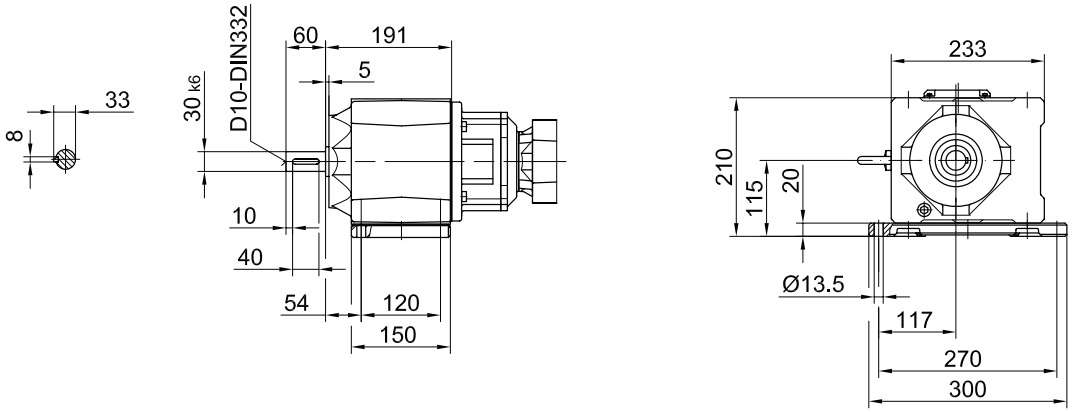

The actual gearbox design can vary from the geometry shown.

BG50G10

Fussausführung mit Durchgangslöchern

Code -11/

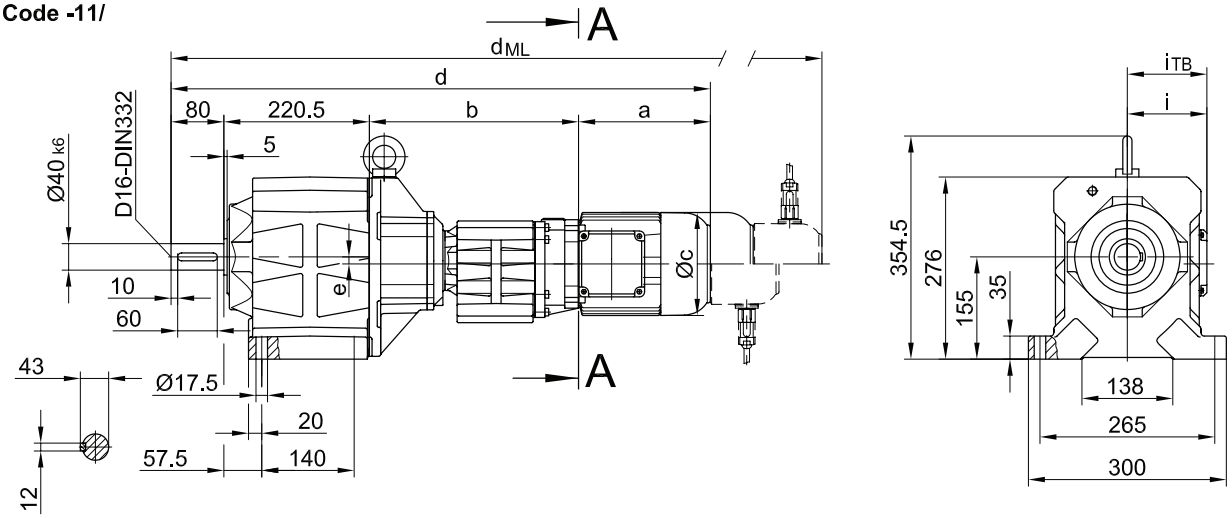

Flansch mit Durchgangslöchern

Code -37/
(Code -27/)

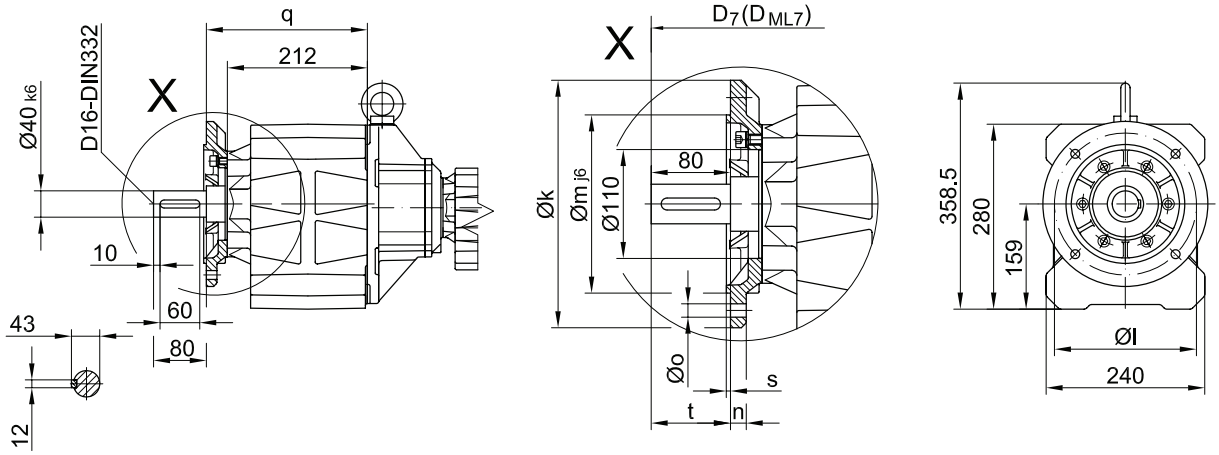

Flanschmasse

BG50G..	k	l	m	n	o	q	s	t	D_7	D_{ML7}
Standard -37/	250	215	180	16	13.5	244	4	80	d+23.5	d_{ML}+23.5
klein -27/	200	165	130	12	11	241	3.5	83	d+23.5	d_{ML}+23.5

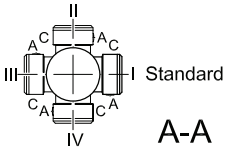

Typ	a	b	c	d	e	i	Ausführung mit Motoranbauten				
							i_{TB}	ES../ZS..	G	ES../ZS..-G	RR/RL
								d_{ML}	d_{ML}	d_{ML}	d_{ML}
BG50G10-../D05..	170	313	123	784	11	100	129.5	826	887	929	-
BG50G10-../D06..	170	313	123	784	11	100	131.5	826	887	929	-
BG50G10-../D07..	190	313	123	804	11	100	131.5	846	907	949	-
BG50G10-../D..08..	200	317	156	817	11	115	149.5	883	924	990	883
BG50G10-../D..09..	251	331.5	181	883	11	124	164	970	990	1077	970

The actual gearbox design can vary from the geometry shown.

BG50G10

Flansch mit Gewindelöchern

Code -71/

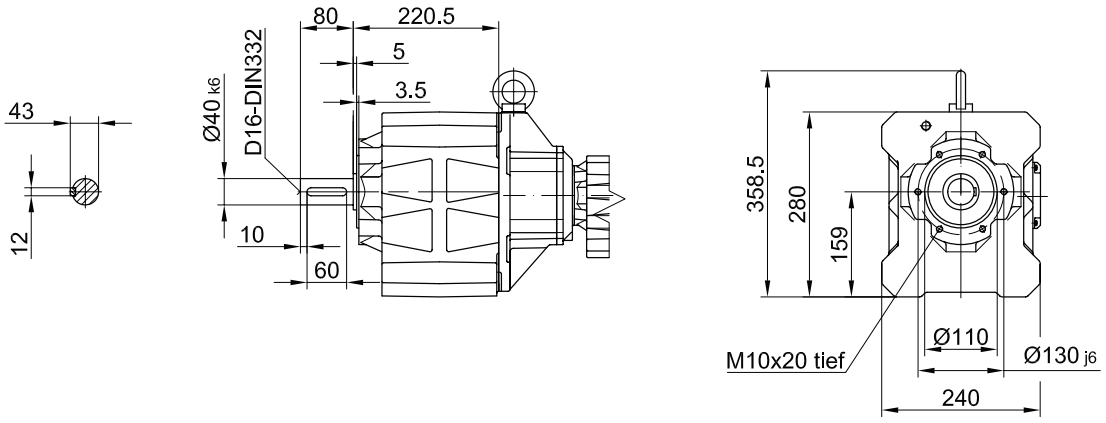

Fuss mit Gewindelöchern links und rechts

Code -61LR/

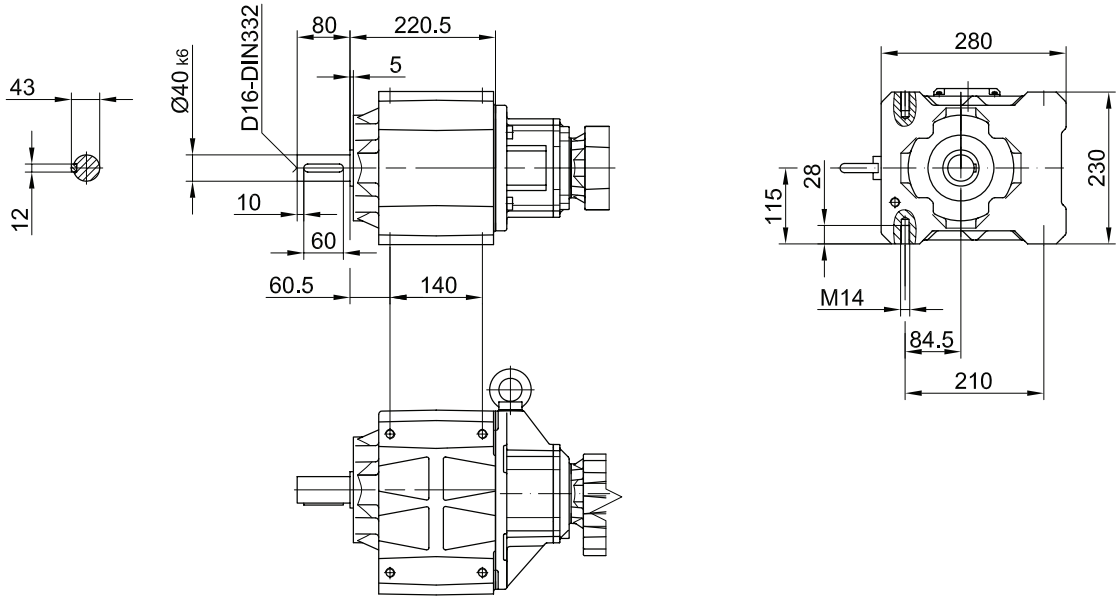

The actual gearbox design can vary from the geometry shown.

BG60G20

Fussausführung mit Durchgangslöchern

Code -11/

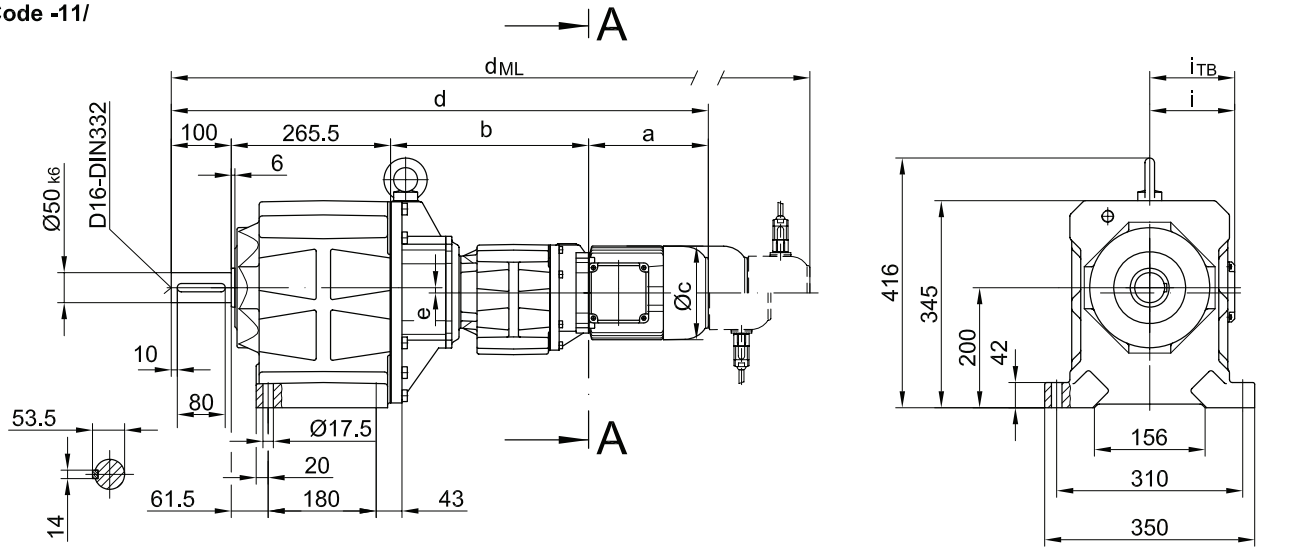

Flansch mit Durchgangslöchern

Code -37/
(Code -27/)

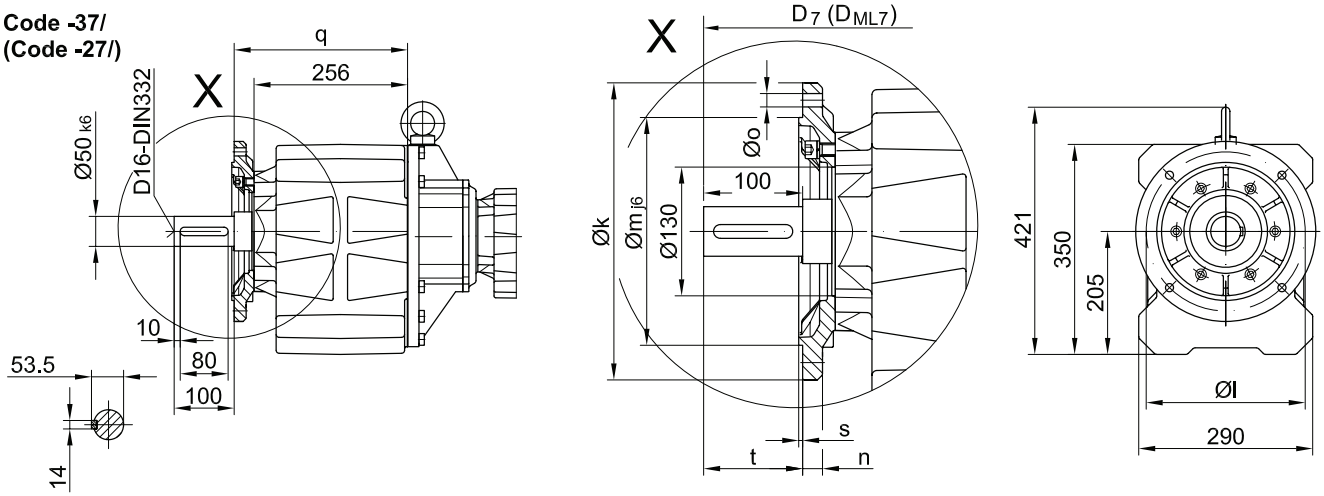

Flanschmasse

BG60G..	k	l	m	n	o	q	s	t	D_7	D_{ML7}
Standard -37/	300	265	230	20	13.5	289	4	100	d+23.5	d_{ML}+23.5
klein -27/	250	215	180	16	13.5	286	4	103	d+23.5	d_{ML}+23.5

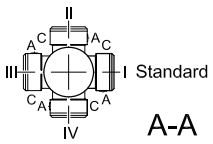

Typ	a	b	c	d	e	i	i_{TB}	Ausführung mit Motoranbauten			
								ES../ZS..	G	ES../ZS..-G	RR/RL
								d_{ML}	d_{ML}	d_{ML}	d_{ML}
BG60G20-../D05..	170	326	123	862	8.5	100	129.5	904	965	1007	-
BG60G20-../D06..	170	326	123	862	8.5	100	131.5	904	965	1007	-
BG60G20-../D07..	190	326	123	882	8.5	100	131.5	924	985	1027	-
BG60G20-../D..08..	200	330	156	895	8.5	115	149.5	961	1002	1068	961
BG60G20-../D..09..	251	344.5	181	961	8.5	124	164	1048	1068	1155	1048

The actual gearbox design can vary from the geometry shown.

BG60G20

Flansch mit Gewindelöchern

Code -71/

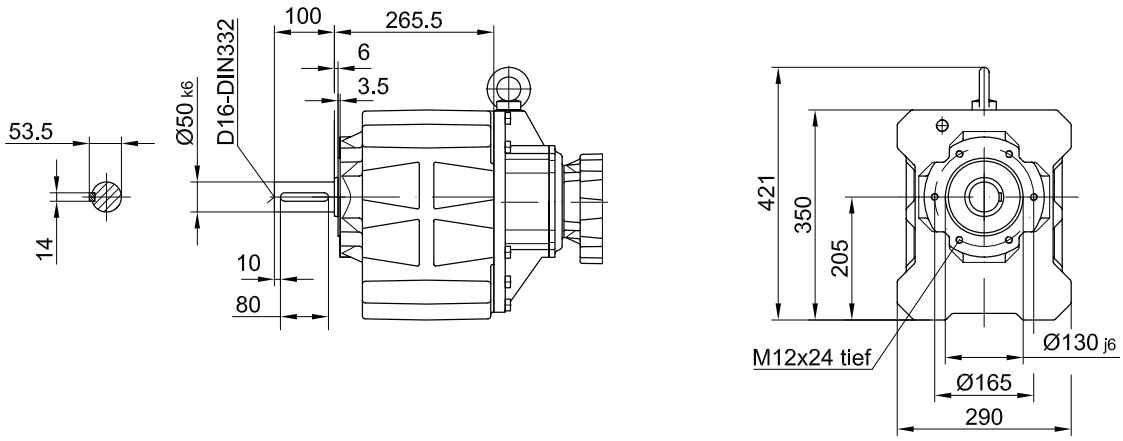

Fuss mit Gewindelöchern links und rechts

Code -61LR/

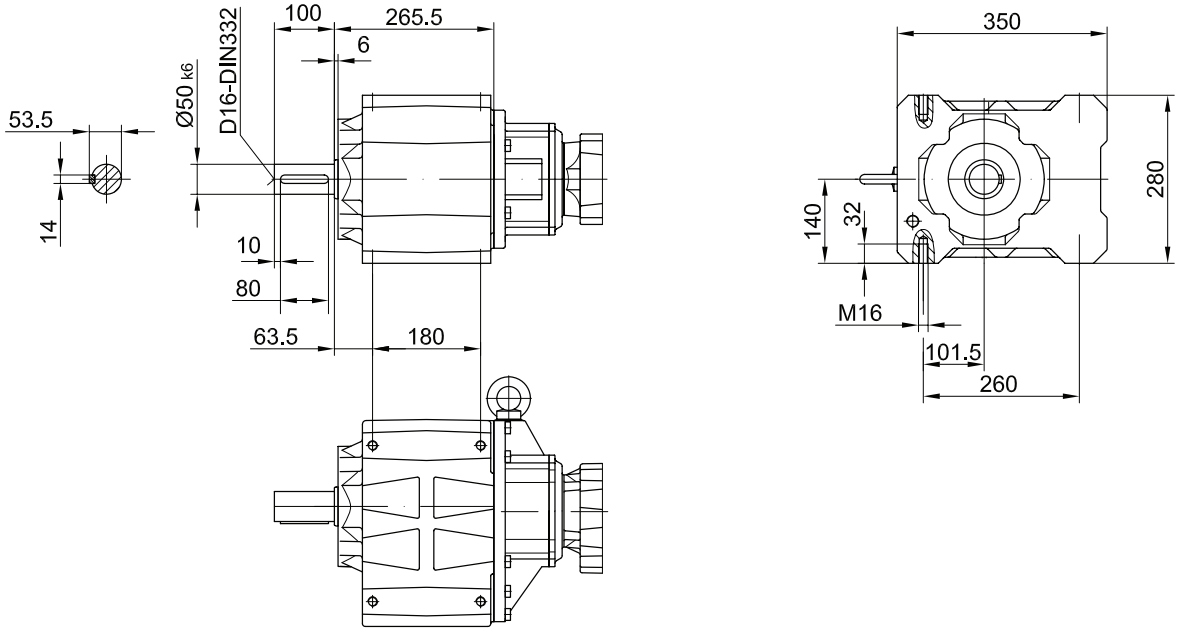

The actual gearbox design can vary from the geometry shown.

BG70G20

Fussausführung mit Durchgangslöchern

Code -11/

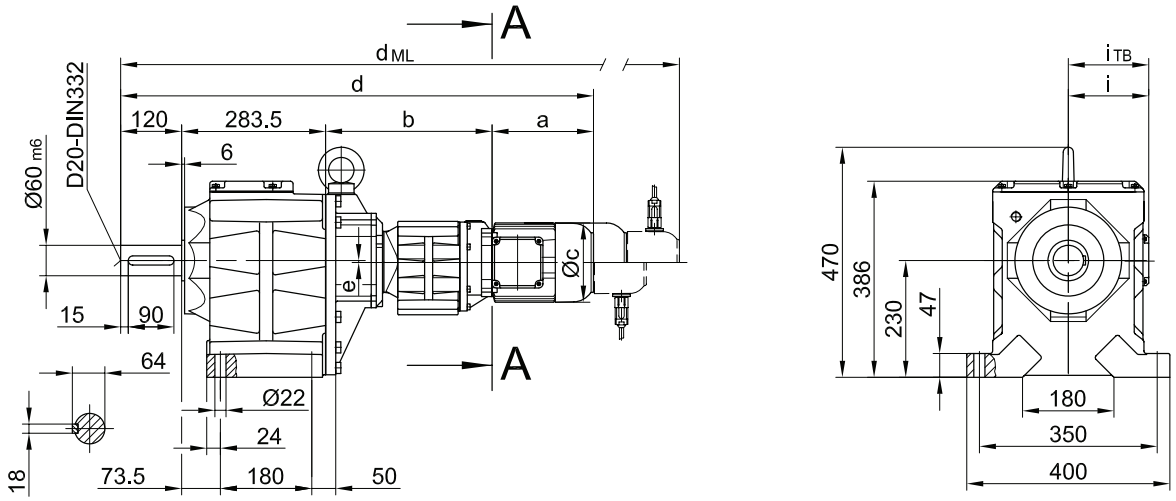

Flansch mit Durchgangslöchern

Code -37/
(Code -27/)

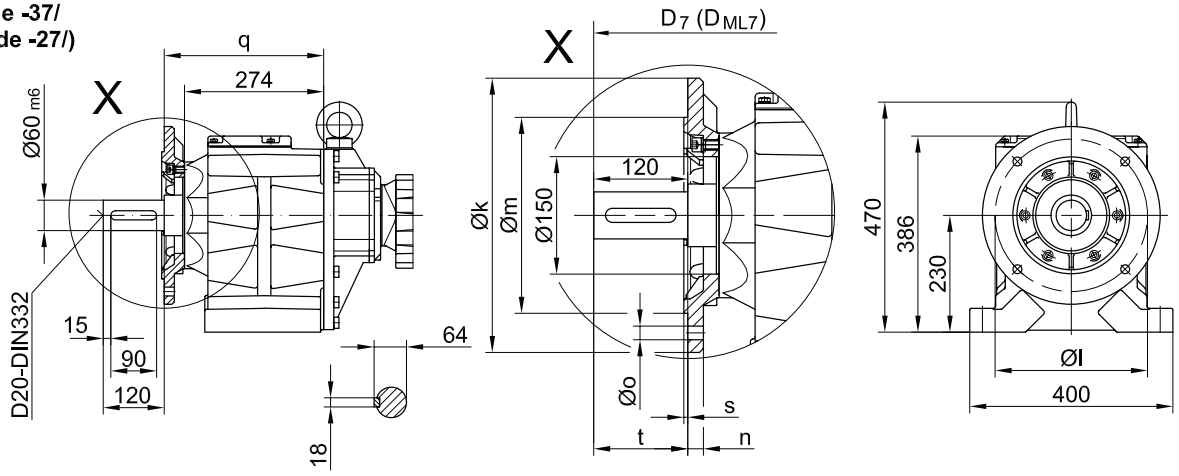

Flanschmasse

BG70G..	k	l	m	n	o	q	s	t	D_7	D_{ML7}
Standard -37/	350	300	250_{h6}	20	17.5	314	5	120	d+30.5	d_{ML}+30.5
klein -27/	300	265	230_{j6}	20	13.5	322	4	112	d+30.5	d_{ML}+30.5

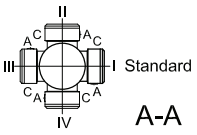

Typ	a	b	c	d	e	i	Ausführung mit Motoranbauten				
							i_{TB}	ES../ZS..	G	ES../ZS..-G	RR/RL
								d_{ML}	d_{ML}	d_{ML}	d_{ML}
BG70G20-../D05..	170	324	123	898	1	100	129.5	940	1003	1043	-
BG70G20-../D06..	170	324	123	898	1	100	131.5	940	1003	1043	-
BG70G20-../D07..	190	324	123	918	1	100	131.5	960	1023	1063	-
BG70G20-../D..08..	200	328	156	931	1	115	149.5	997	1038	1104	997
BG70G20-../D..09..	251	342.5	181	997	1	124	164	1084	1104	1193	1084

The actual gearbox design can vary from the geometry shown.

BG70G20

Flansch mit Gewindelöchern

Code -71/

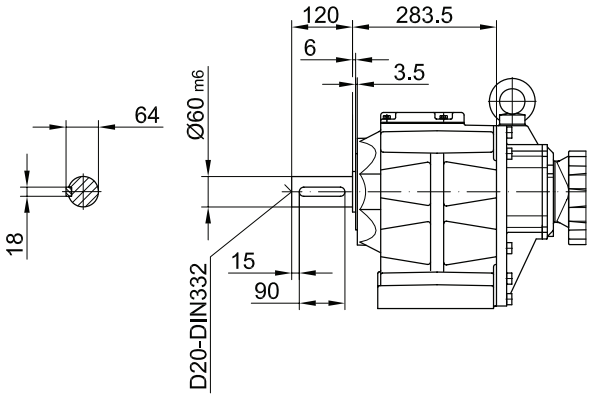

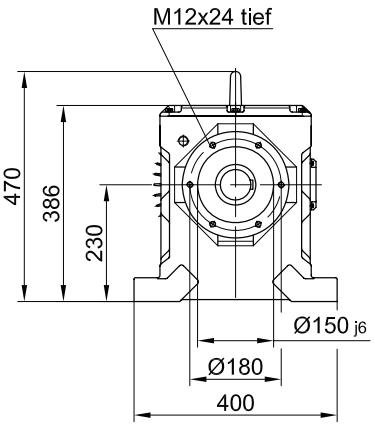

10

The actual gearbox design can vary from the geometry shown.

BG80G40

Fussausführung mit Durchgangslöchern

Code -11/

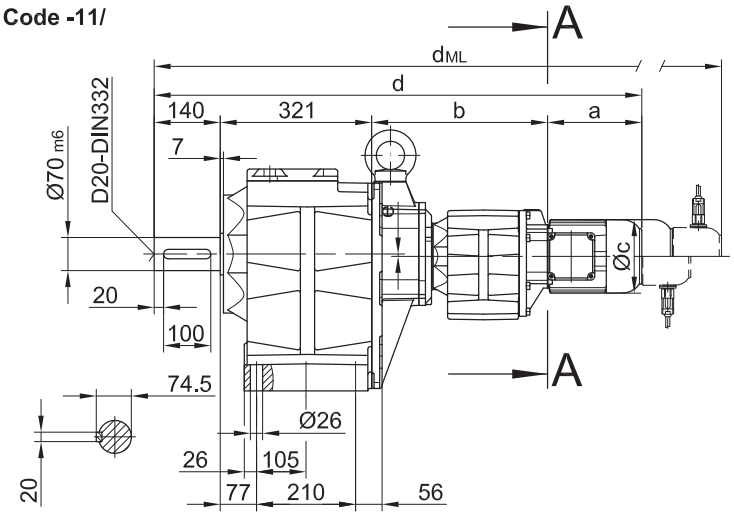

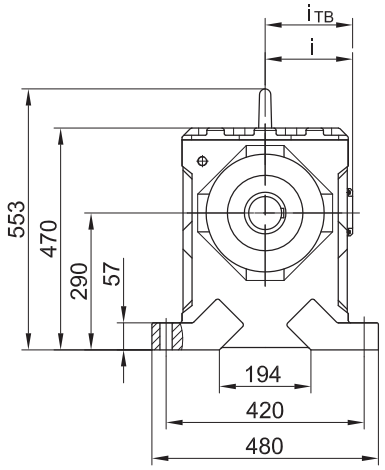

Flansch mit Durchgangslöchern

Code -37/
(Code -27/)
(Code -47/)

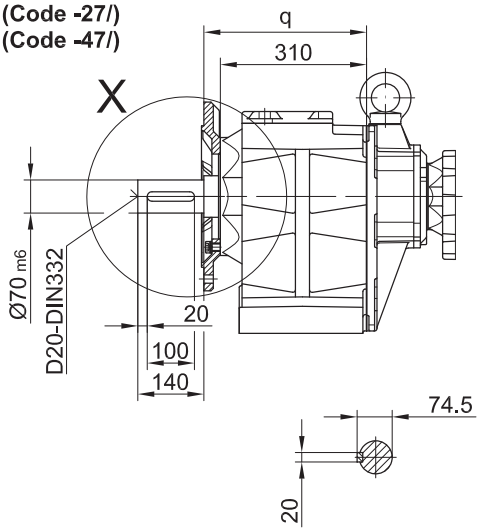

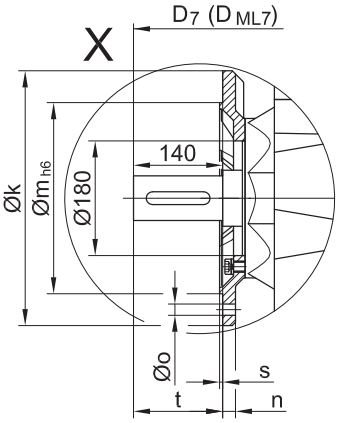

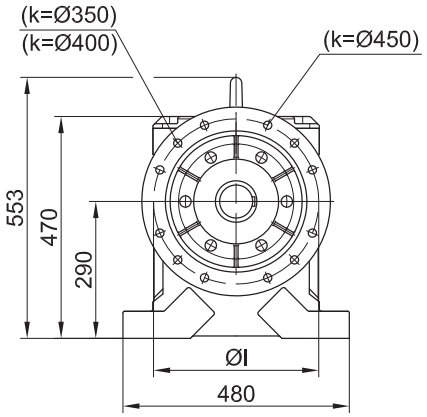

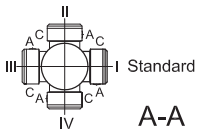

Flanschmasse

BG80G..	k	l	m	n	o	q	s	t	D_7	D_{ML7}
Standard -37/	400	350	300	20	4 x Ø17.5	345	5	140	d+24	d_{ML}+24
klein -27/	350	300	250	20	4 x Ø17.5	345	5	140	d+24	d_{ML}+24
gross -47/	450	400	350	22	8 x Ø17.5	355	5	130	d+24	d_{ML}+24

Typ	a	b	c	d	e	i	Ausführung mit Motoranbauten				
							i_{TB}	ES../ZS..	G	ES../ZS..-G	RR/RL
								d_{ML}	d_{ML}	d_{ML}	d_{ML}
BG80G40-../D..08..	200	373	156	1034	-	115	149.5	1100	1141	1207	1100
BG80G40-../D..09..	251	387.5	181	1099	-	124	164	1186	1006	1293	1186
BG80G40-../D..11..	319	394	228	1174	-	181	181	1270	1281	1377	1270

The actual gearbox design can vary from the geometry shown.

BG80G40

Flansch mit Gewindelöchern

Code -71/

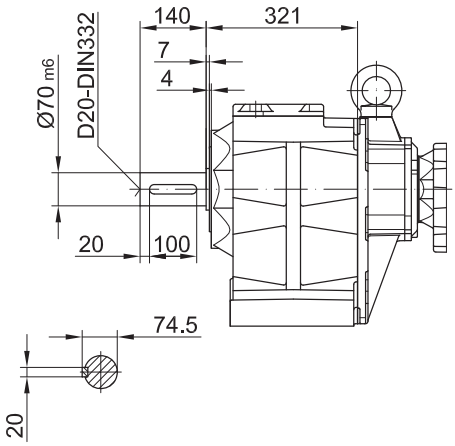

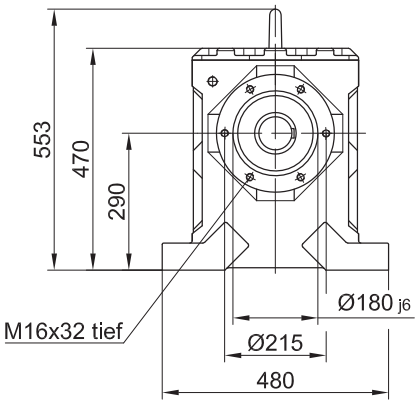

10

The actual gearbox design can vary from the geometry shown.

BG90G50

Fussausführung mit Durchgangslöchern

Code -11/

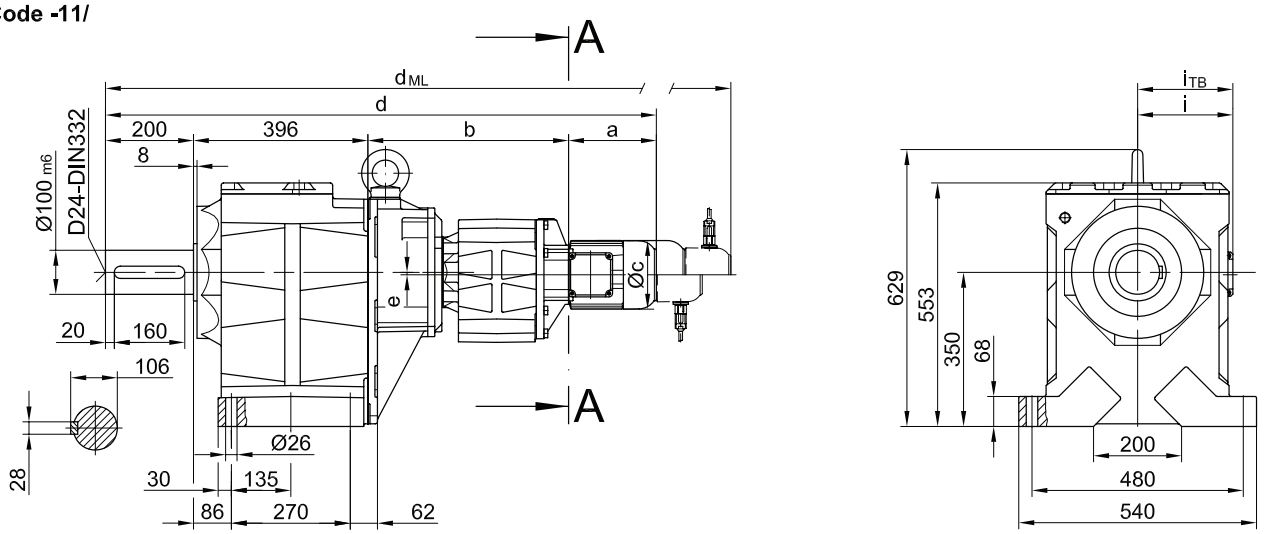

Fussausführung mit Durchgangslöchern

Code -37/
(Code -47/)

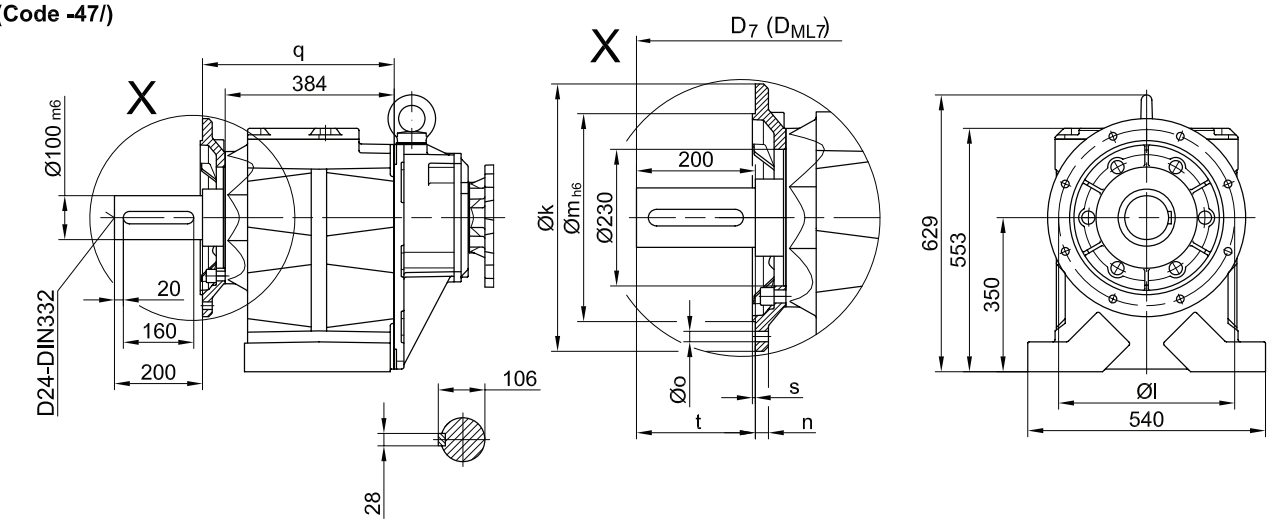

Flanschmasse

BG90G...	k	l	m	n	o	q	s	t	D_7	D_{ML7}
Standard -37/	450	400	350	22	17.5	439	5	200	d+43	d_{ML}+43
gross -47/	550	500	450	22	17.5	444	5	195	d+43	d_{ML}+43

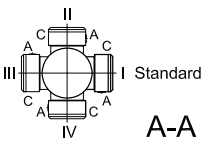

A-A

Typ	a	b	c	d	e	i	Ausführung mit Motoranbauten				
							i_{TB}	ES../ZS..	G	ES../ZS..-G	RR/RL
								d_{ML}	d_{ML}	d_{ML}	d_{ML}
BG90G50-../D..08..	200	456	156	1252	6	115	149.5	1318	1359	1425	1318
BG90G50-../D..09..	251	470.5	181	1317	6	124	164	1404	1424	1511	1404
BG90G50-../D..11..	319	477	228	1392	6	181	181	1488	1499	1595	1488
BG90G50-../D..13..	393	490	266	1479	6	217	217	1537	1586	1644	1537
BG90G50-../D..16..	429	504	322	1529	6	243	243	1673	1637	1781	1673

The actual gearbox design can vary from the geometry shown.

BG90G50

Flansch mit Gewindelöchern
Code -71/

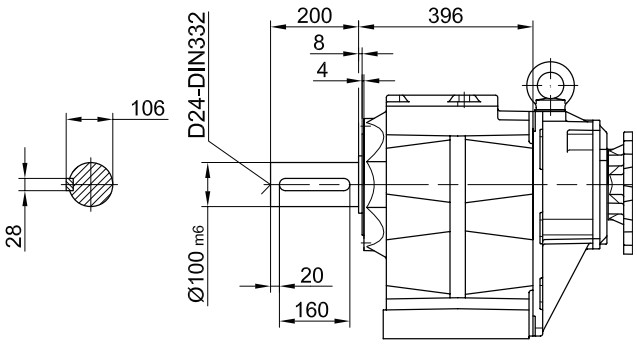

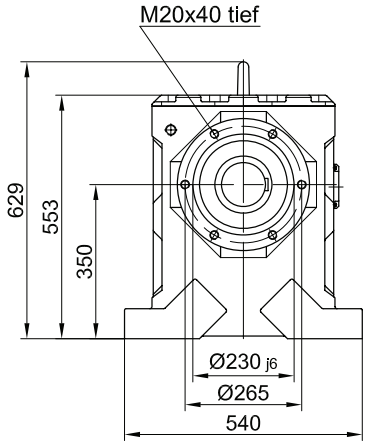

10

The actual gearbox design can vary from the geometry shown.

BG100G50

Fussausführung mit Durchgangslöchern

Code -11/

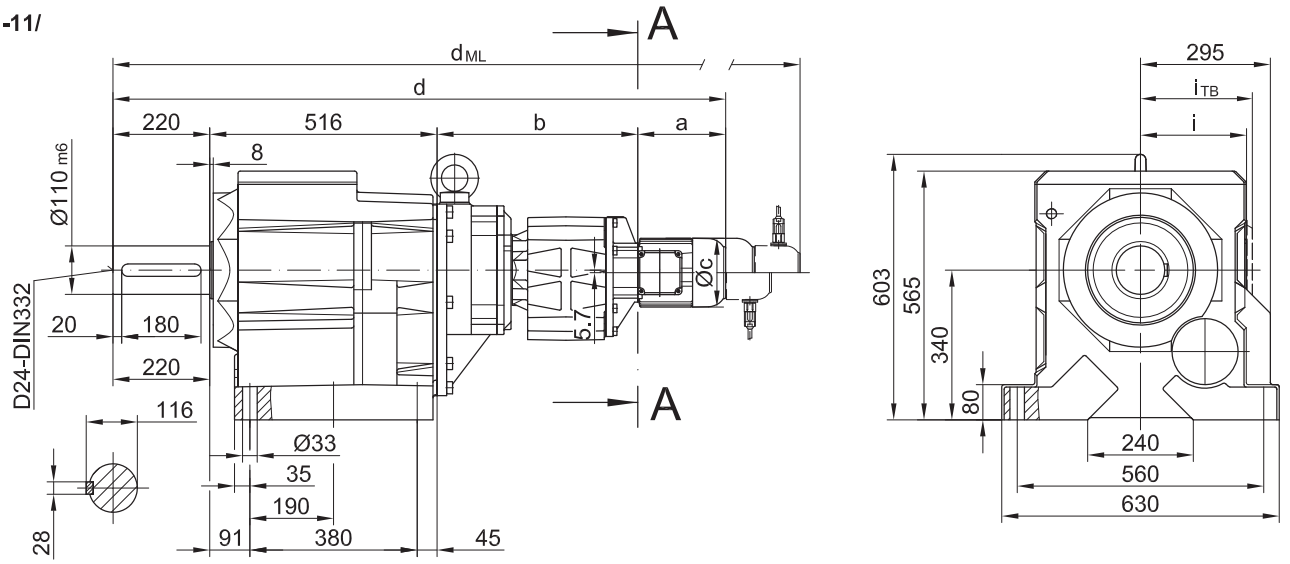

Flansch mit Durchgangslöchern

Code -37/
(Code -47/)

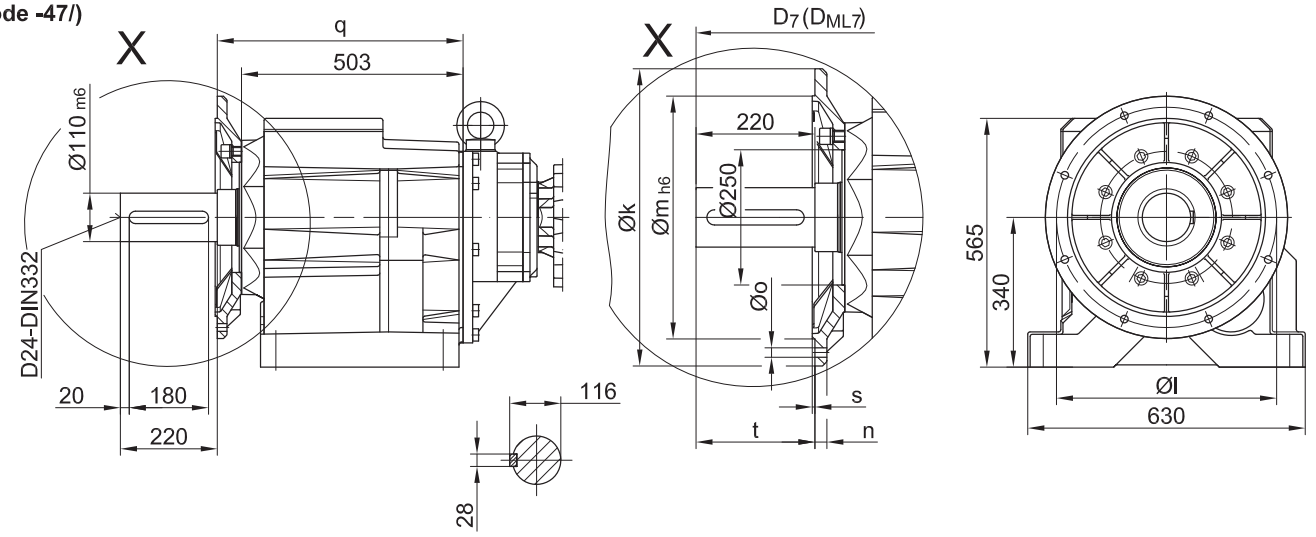

Flanschmasse

BG100(Z)	k	l	m	n	o	q	s	t	D_7	D_{ML7}
Standard -37/	550	500	450	22	17.5	558	5	220	d+42	d_{ML}+42
gross -47/	660	600	550	25	22	552	6	226	d+42	d_{ML}+42

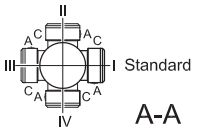

Typ	a	b	c	d	i	Ausführung mit Motoranbauten				
						i_{TB}	ES../ZS..	G	ES../ZS..-G	RR/RL
							d_{ML}	d_{ML}	d_{ML}	d_{ML}
BG100G50-../D..08..	200	456	156	1392	115	149.5	1458	1499	1565	1458
BG100G50-../D..09..	251	470.5	181	1457	124	164	1544	1564	1661	1544
BG100G50-../D..11..	319	477	228	1532	181	181	1628	1639	1735	1628
BG100G50-../D..13..	393	490	266	1619	217	217	1727	1726	1834	1727
BG100G50-../D..16..	429	504	322	1669	243	243	1813	1777	1921	1813

The actual gearbox design can vary from the geometry shown.

BG100G50

Flansch mit Gewindelöchern

Code 71/

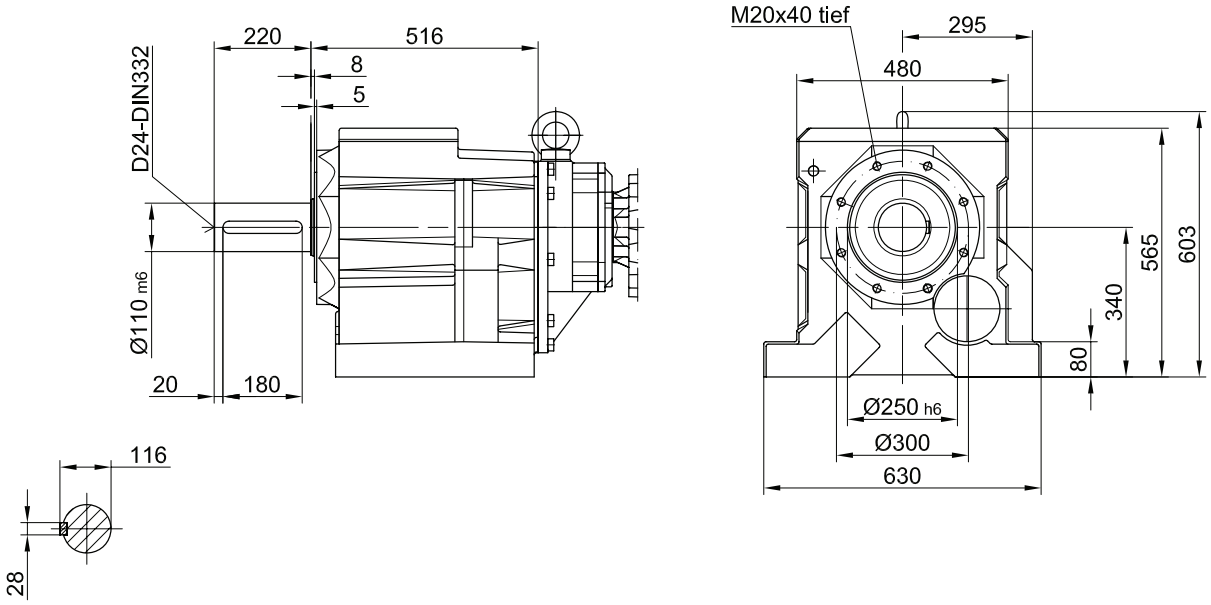

10

The actual gearbox design can vary from the geometry shown.

11

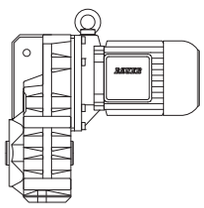

Page

Dimensional drawings shaft-mounted-geared motors 453-500
- **Standard** 454-473
- **Tanden Gearbox** 474-491

Additional Dimension Sheet

- Shrink Disk (SSV)
- Shrink Disk Connection with Cover (SSV)
- Hole Pattern Side (H)
- Rubber buffer for torque restraint
- Assembly Tools for Hollow Shaft
- Sealing Cap (VK))
- Sealing Cover (VD)

BF06

mit Drehmomentstütze

Code -0./

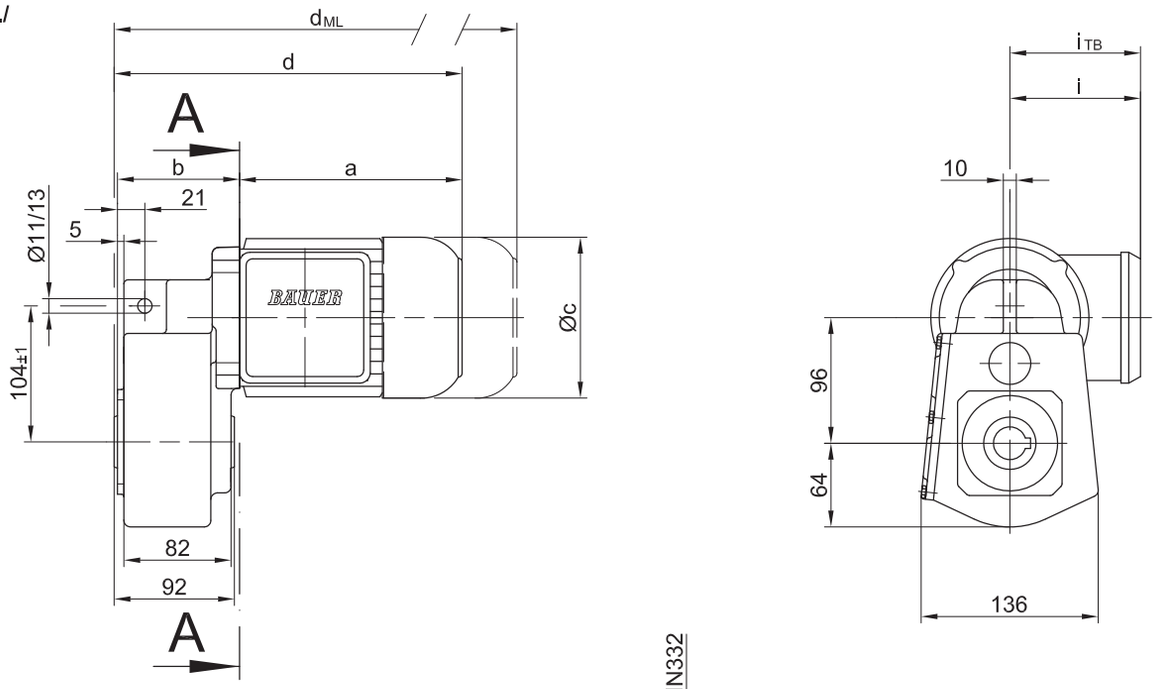

Code -.4/

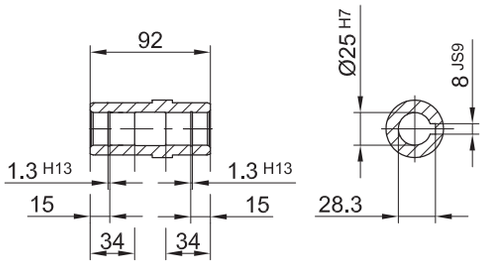

Code -.1/

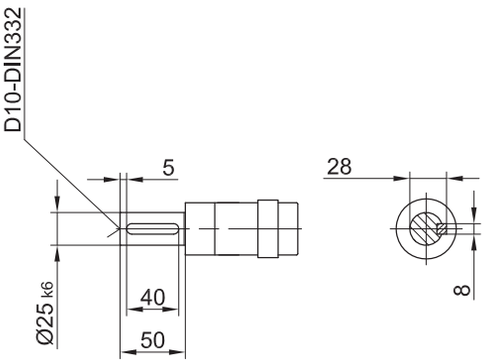

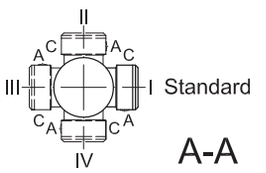

Typ	a	b	c	d	i	Ausführung mit Motoranbauten				
						i_{TB}	ES../ZS..	G	ES../ZS..-G	RR/RL
							d_{ML}	d_{ML}	d_{ML}	d_{ML}
BF06-../D05..	170	93.5	123	267.5	100	129.5	308.5	370.5	411.5	-
BF06-../D06..	170	93.5	123	267.5	100	131.5	308.5	370.5	411.5	-
BF06-../D07..	190	94.5	123	287.5	100	131.5	328.5	390.5	431.5	-
BF06-../D..08..	200	141	156	344	115	149.5	410	451	517	410

The actual gearbox design can vary from the geometry shown.

BF06

Flansch mit Gewindelöchern

Code -7./

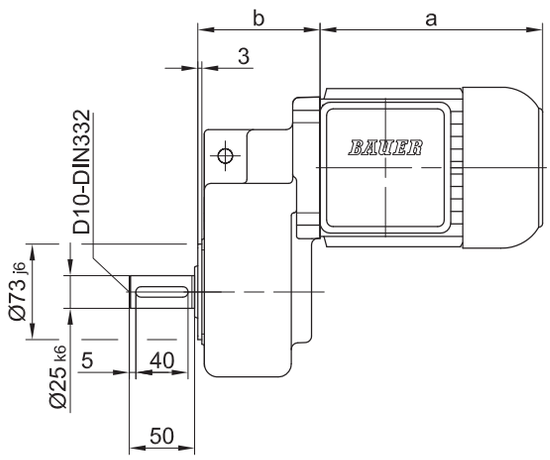

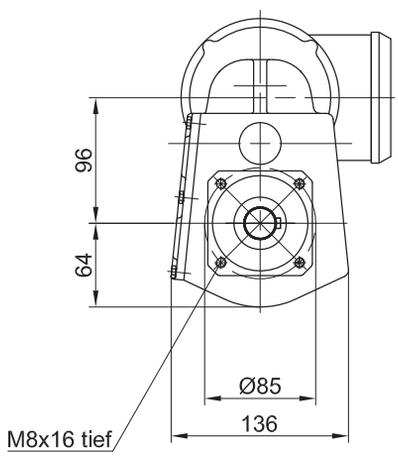

Flansch mit Durchgangslöchern

Code -3.V/
(Code -4.V/)

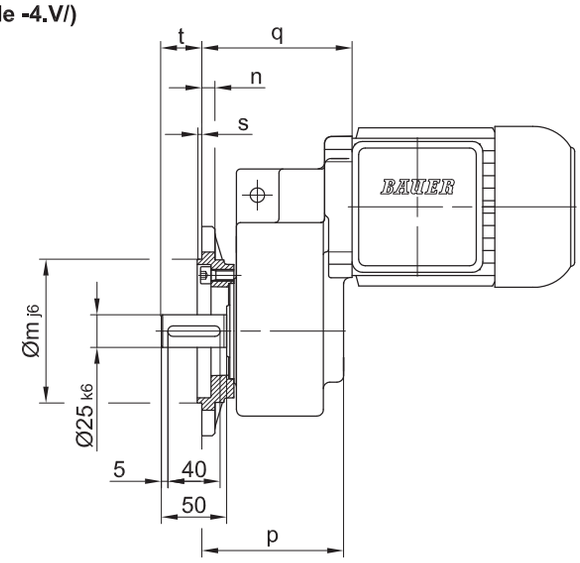

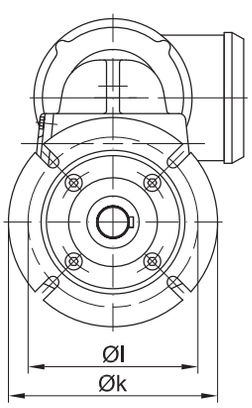

Flanschmasse

BF06	k	l	m	n	o	p	$q_{1)}$	$q_{2)}$	s	t
Standard -3./	140	115	95	10	9	108.5	115	163	3	31.5
gross -4./	160	130	110	10	9	108.5	115	163	3.5	31.5

1) nur bei Motorgrössen D05; D06; D07

2) nur bei Motorgrösse D08..

The actual gearbox design can vary from the geometry shown.

BF10 - BF10Z

mit Drehmomentstütze

Code -0./

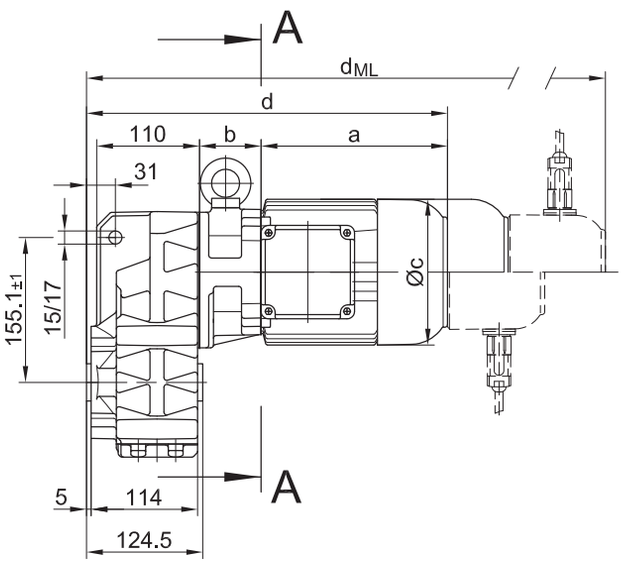

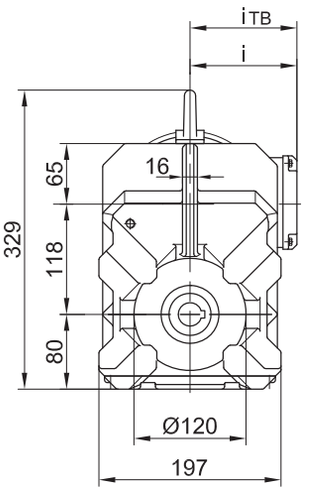

Code -.4/

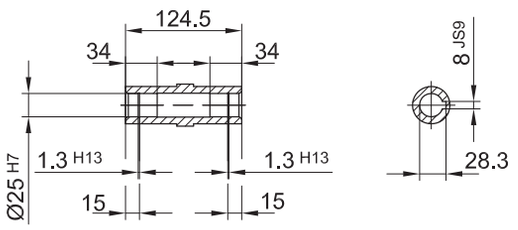

Code -.1/

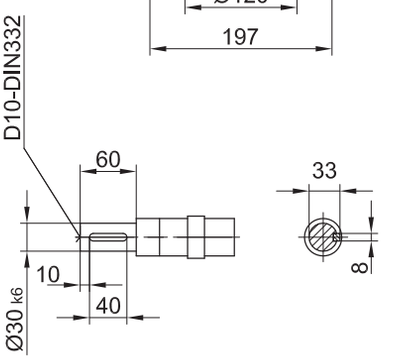

Code -.5/

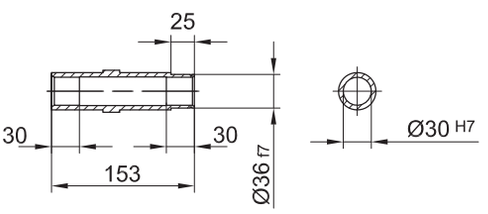

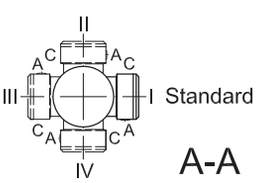

Typ	a	b	c	d	i	Ausführung mit Motoranbauten				
						i_{TB}	ES../ZS..	G	ES../ZS..-G	RR/RL
							d_{ML}	d_{ML}	d_{ML}	d_{ML}
BF10Z-../D04..	143	86	111	350	90	124.5	393.5	412.5	456	-
BF10-../D05..	170	62	123	354	100	129.5	395	457	498	-
BF10Z-../D05..	170	88	123	380	100	129.5	421	483	524	-
BF10-../D06..	170	62	123	354	100	131.5	395	457	498	-
BF10Z-../D06..	170	88	123	380	100	131.5	421	483	524	-
BF10-../D07..	190	62	123	374	100	131.5	415	477	518	-
BF10Z-../D07..	190	88	123	400	100	131.5	441	503	544	-
BF10-../D..08..	200	66	156	387	115	149.5	453	494	560	453
BF10Z-../D..08..	200	132	156	448	115	149.5	514	554	621	514
BF10-../D..09..	251	80.5	181	453	124	164	540	560	647	540

The actual gearbox design can vary from the geometry shown.

BF10 - BF10Z

Flansch mit Gewindelöchern
Code -7./

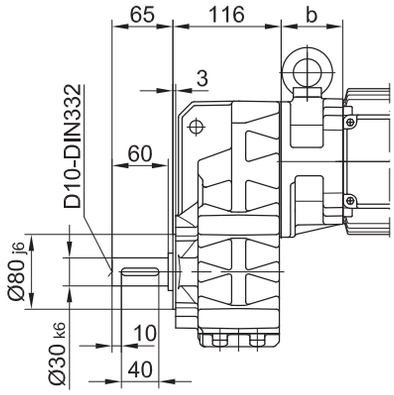

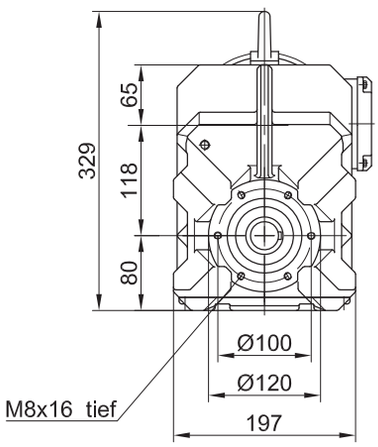

Flansch mit Durchgangslöchern
Code -3./
(Code -2./)

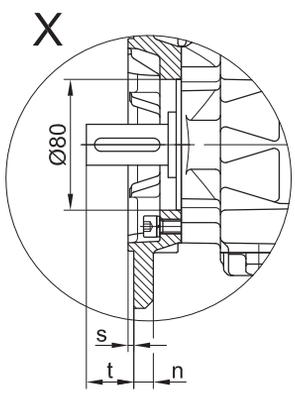

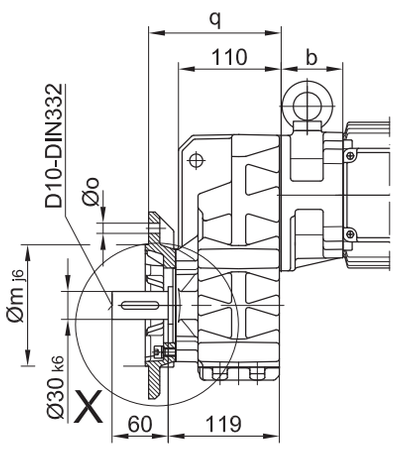

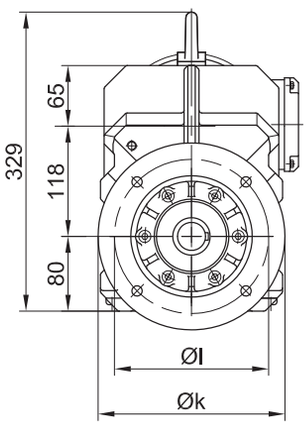

Flanschmasse

BF10(Z)	k	l	m	n	o	q	s	t
Standard -3./	200	165	130	12	11	142	3.5	39
klein -2./	160	130	110	10	9	135	3.5	46

Fuss mit Gewindelöchern links und rechts
Code -6.LR/

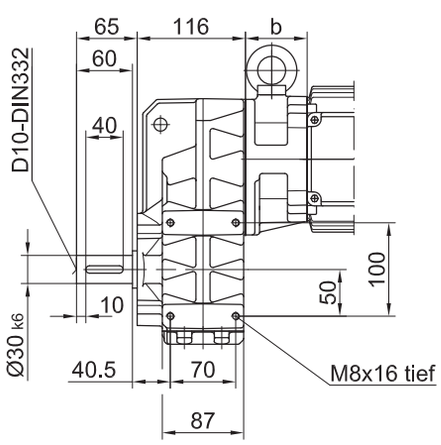

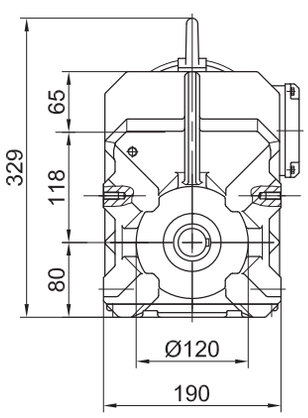

The actual gearbox design can vary from the geometry shown.

BF20 - BF20Z

mit Drehmomentstütze

Code -0./

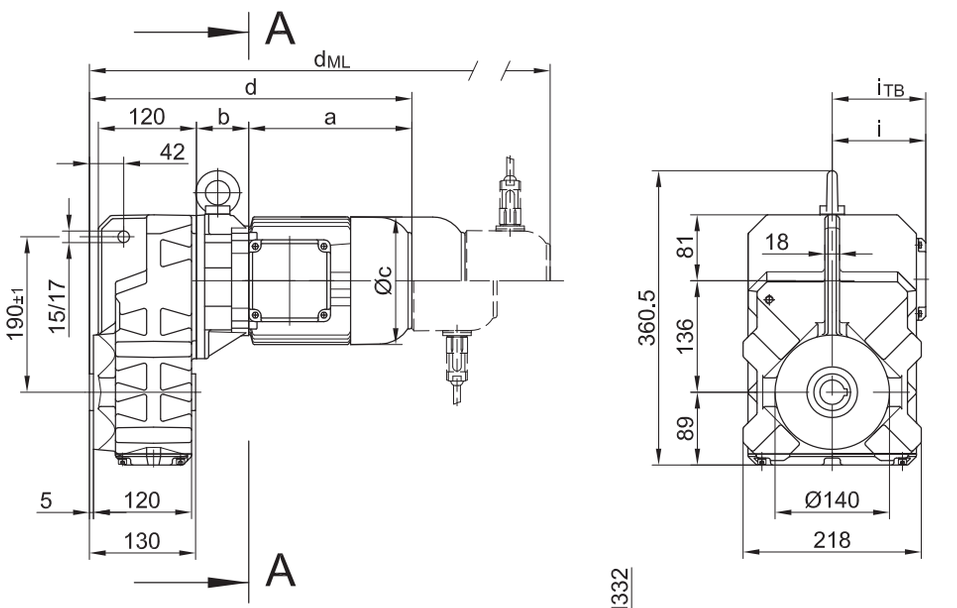

Code -.4/

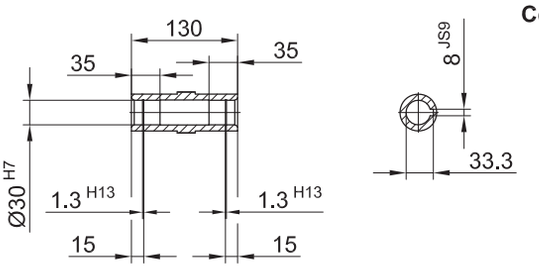

Code -.1/

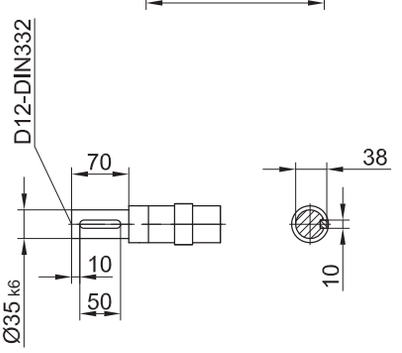

Code -.5/

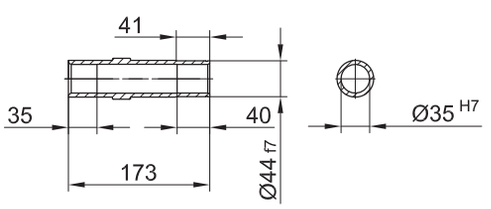

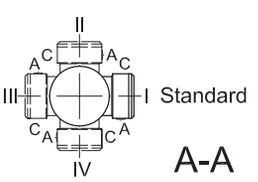

Typ	a	b	c	d	i	Ausführung mit Motoranbauten				
						i_{TB}	ES../ZS..	G	ES../ZS..-G	RR/RL
							d_{ML}	d_{ML}	d_{ML}	d_{ML}
BF20Z-../D04..	143	100	111	374	90	124.5	417.5	561.5	480	-
BF20-../D05..	170	60	123	362	100	129.5	403	465	506	-
BF20Z-../D05..	170	102	123	404	100	129.5	445	507	548	-
BF20-../D06..	170	60	123	362	100	131.5	403	465	506	-
BF20Z-../D06..	170	102	123	404	100	131.5	445	507	548	-
BF20-../D07..	190	60	123	382	100	131.5	423	485	526	-
BF20Z-../D07..	190	102	123	424	100	131.5	465	527	568	-
BF20-../D..08..	200	64	156	395	115	149.5	461	502	568	461
BF20Z-../D..08..	200	146	156	477	115	149.5	543	584	650	543
BF20-../D..09..	251	78.5	181	460	124	164	547	567	654	547

The actual gearbox design can vary from the geometry shown.

BF20 - BF20Z

Flansch mit Gewindelöchern

Code -7./

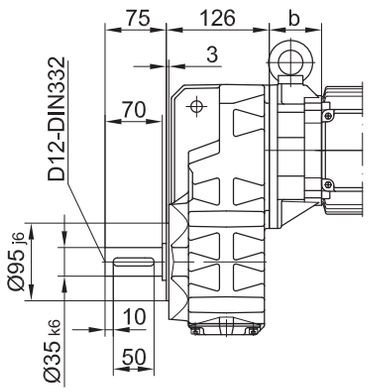

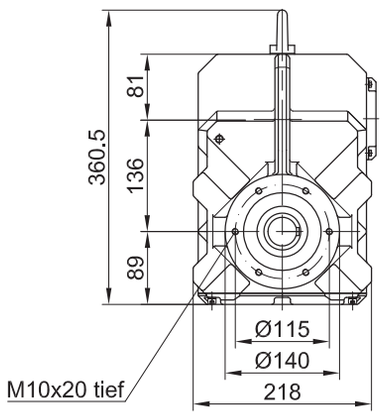

Flansch mit Durchgangslöchern

Code -3./
(Code -2./)

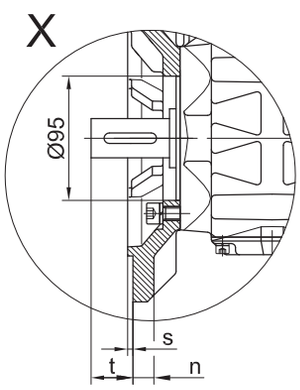

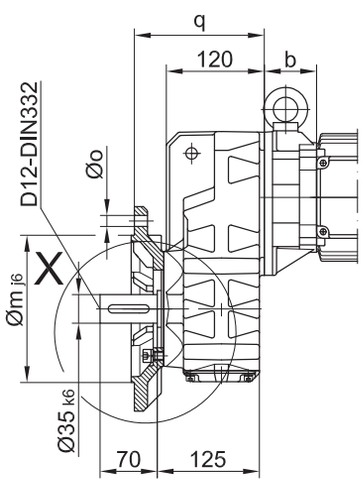

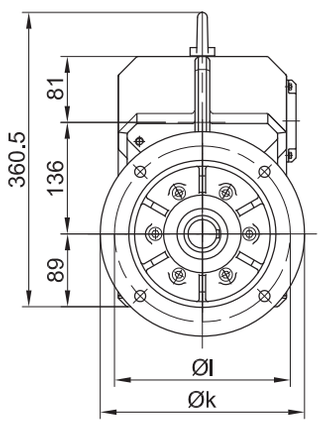

Flanschmasse

BF20(Z)	k	l	m	n	o	q	s	t
Standard -3./	250	215	180	16	13.5	159	4	42
klein -2./	200	165	130	12	11	150	3.5	51

Fuss mit Gewindelöchern links und rechts

Code -6.LR/

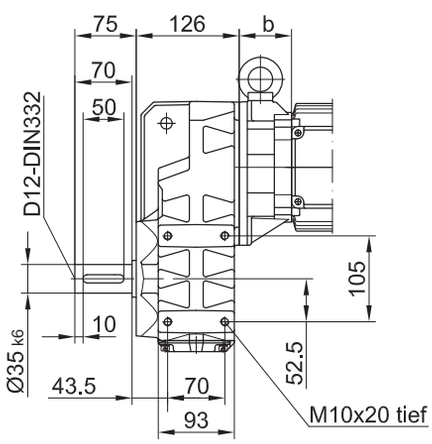

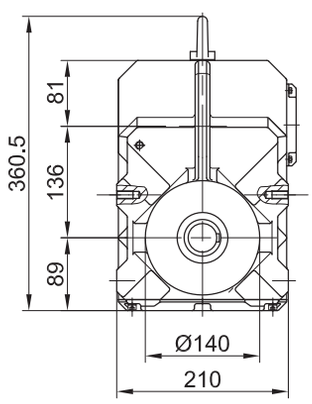

The actual gearbox design can vary from the geometry shown.

BF30 - BF30Z

mit Drehmomentstütze

Code -0./

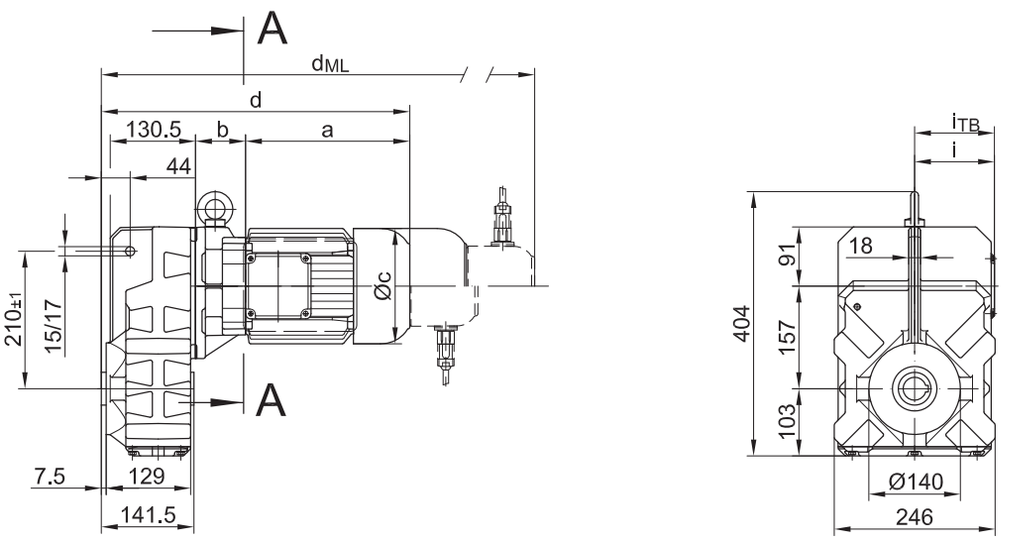

Code -.4/

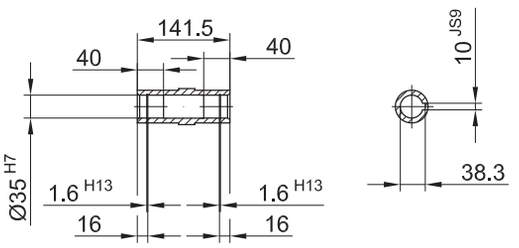

Code -.1/

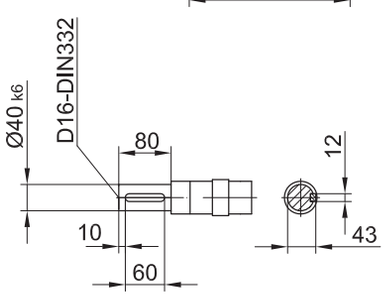

Code -.5/

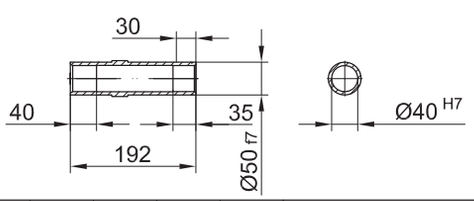

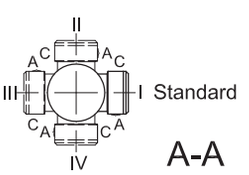

Typ	a	b	c	d	i	Ausführung mit Motoranbauten				
						i_{TB}	ES../ZS..	G	ES../ZS..-G	RR/RL
							d_{ML}	d_{ML}	d_{ML}	d_{ML}
BF30-../D05..	170	58	123	373	100	129.5	414	476	517	-
BF30Z-../D05..	170	133.5	123	448	100	129.5	489	551	592	-
BF30-../D06..	170	58	123	373	100	131.5	414	476	517	-
BF30Z-../D06..	170	133.5	123	448	100	131.5	489	551	592	-
BF30-../D07..	190	58	123	393	100	131.5	434	496	537	-
BF30Z-../D07..	190	133.5	123	468	100	131.5	509	571	612	-
BF30-../D..08..	200	62	156	406	115	149.5	472	513	579	472
BF30Z-../D..08..	200	137.5	156	481	115	149.5	547	588	654	547
BF30-../D..09..	251	76.5	181	471	124	164	558	578	665	558
BF30Z-../D..09..	251	152	181	547	124	164	634	654	743	634
BF30-../D..11..	319	83	228	546	181	181	635	655	742	635

The actual gearbox design can vary from the geometry shown.

BF30 - BF30Z

Flansch mit Gewindelöchern

Code -7./

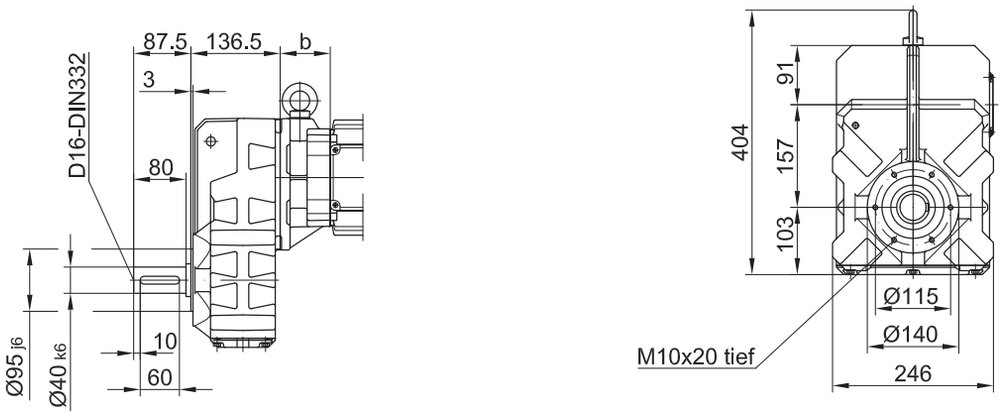

Flansch mit Durchgangslöchern

Code -3./
(Code -2./)

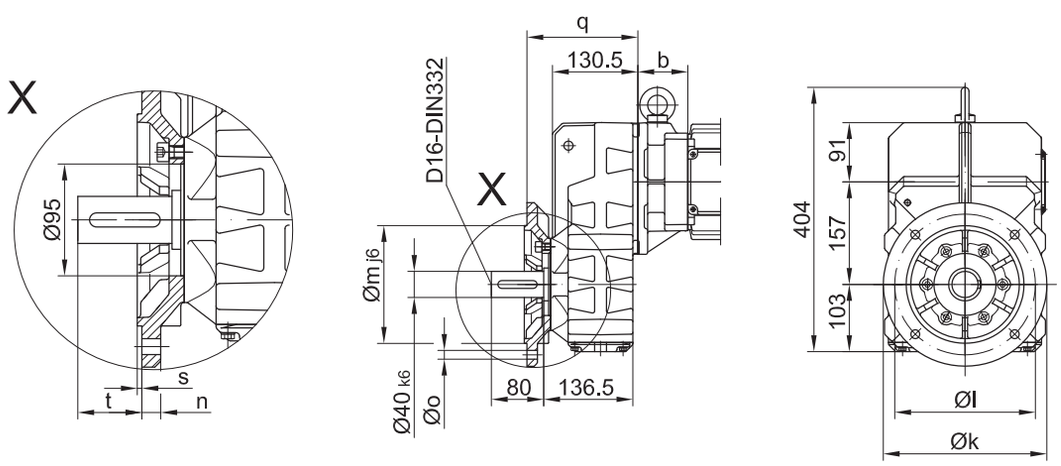

Flanschmasse

BF30(Z)	k	l	m	n	o	q	s	t
Standard -3./	250	215	80	16	13.5	169.5	4	54.5
klein -2./	200	165	130	12	11	160.5	3.5	63.5

Fuss mit Gewindelöchern links und rechts

Code -6.LR/

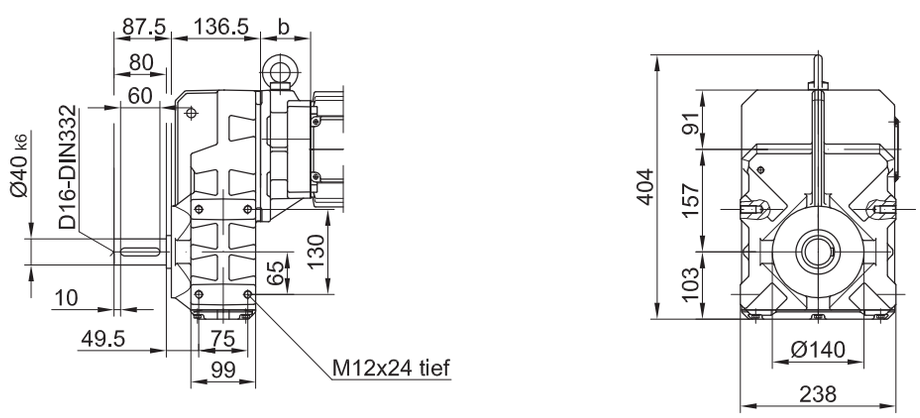

The actual gearbox design can vary from the geometry shown.

BF40 - BF40Z

mit Drehmomentstütze

Code -0./

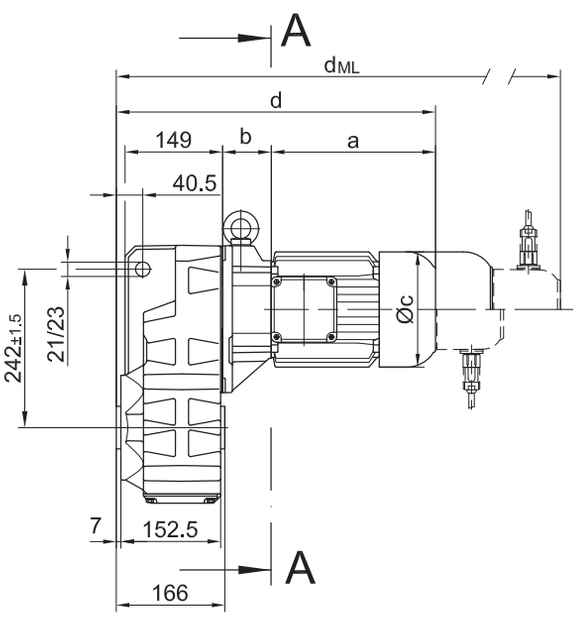

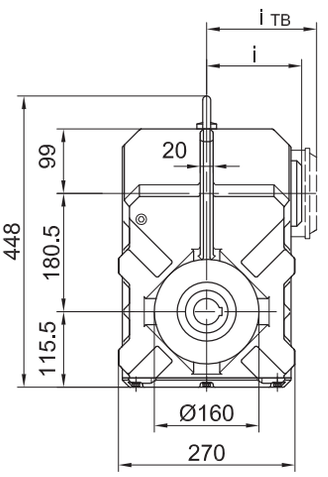

Code -.4/

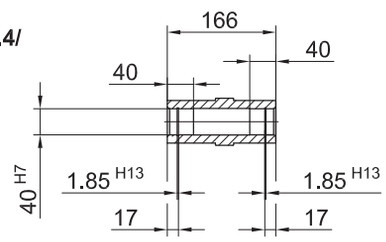

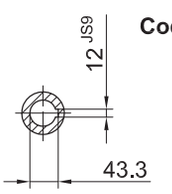

Code -.1/

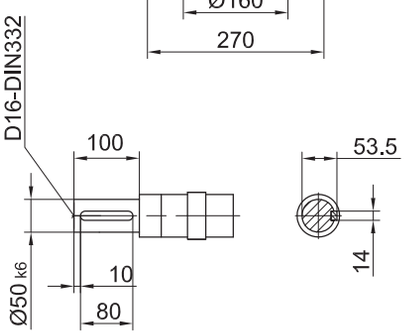

Code -.5/

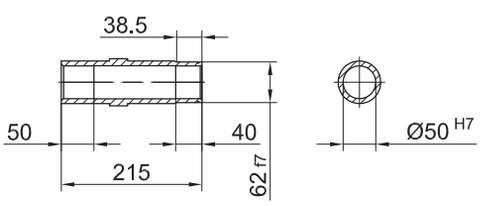

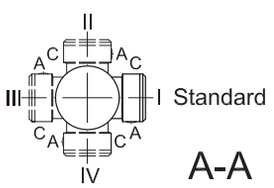

Typ	a	b	c	d	i	Ausführung mit Motoranbauten				
						i_{TB}	ES../ZS..	G	ES../ZS..-G	RR/RL
							d_{ML}	d_{ML}	d_{ML}	d_{ML}
BF40Z-../D05..	170	138.5	123	472	100	129.5	513	575	616	-
BF40Z-../D06..	170	138.5	123	472	100	131.5	513	575	616	-
BF40Z-../D07..	190	138.5	123	492	100	131.5	533	595	636	-
BF40-../D..08..	200	60	156	422	115	149.5	488	529	595	488
BF40Z-../D..08..	200	142.5	156	506	115	149.5	572	613	679	572
BF40-../D..09..	251	74.5	181	489	124	164	576	596	683	576
BF40Z-../D..09..	251	157	181	570	124	164	657	677	764	657
BF40-../D..11..	319	81	228	563	181	181	659	670	766	659

The actual gearbox design can vary from the geometry shown.

BF40 - BF40Z

Flansch mit Gewindelöchern

Code -7./

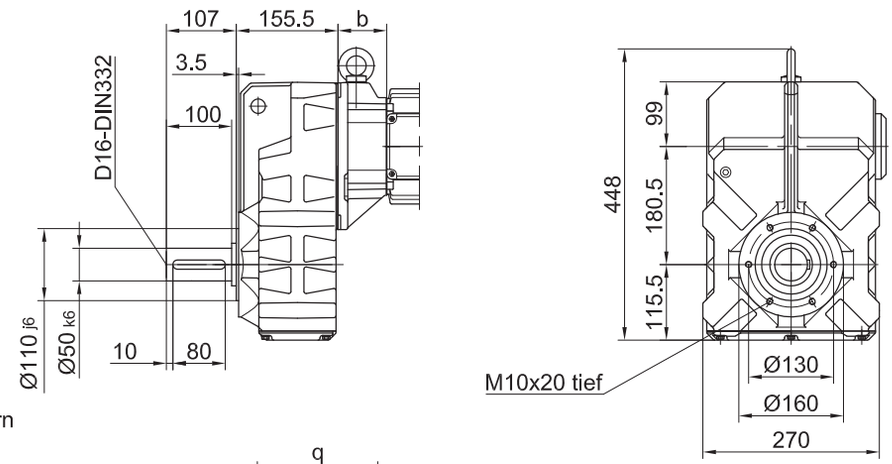

Flansch mit Durchgangslöchern

Code -3./
(Code -4./)

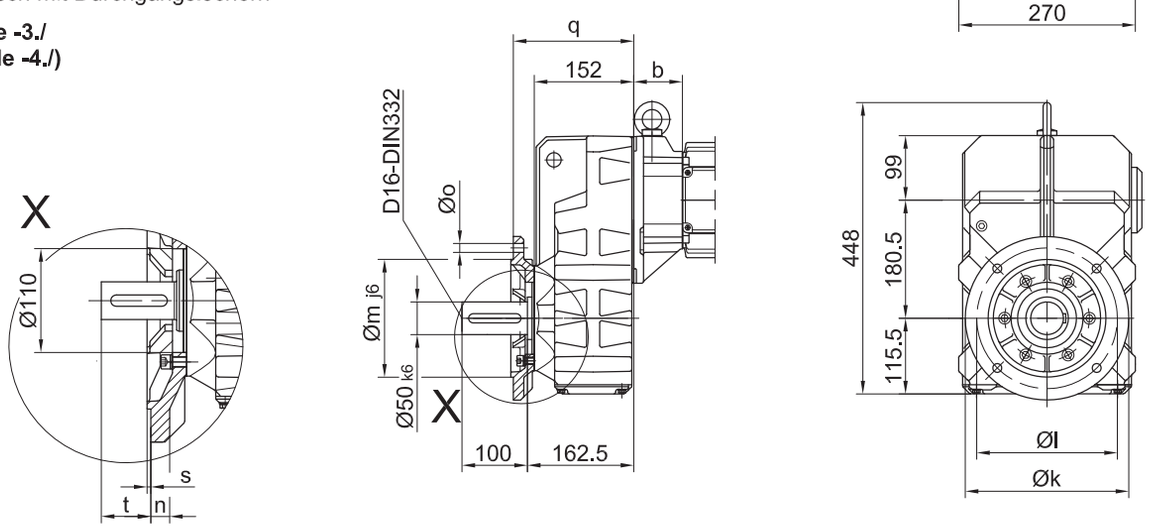

Flanschmasse

BF40(Z)	k	l	m	n	o	q	s	t
Standard -3./	250	215	180	16	13.5	184	4	78.5
gross -4./	300	265	230	20	13.5	190	4	72.5

Fuss mit Gewindelöchern links und rechts

Code -6.LR/

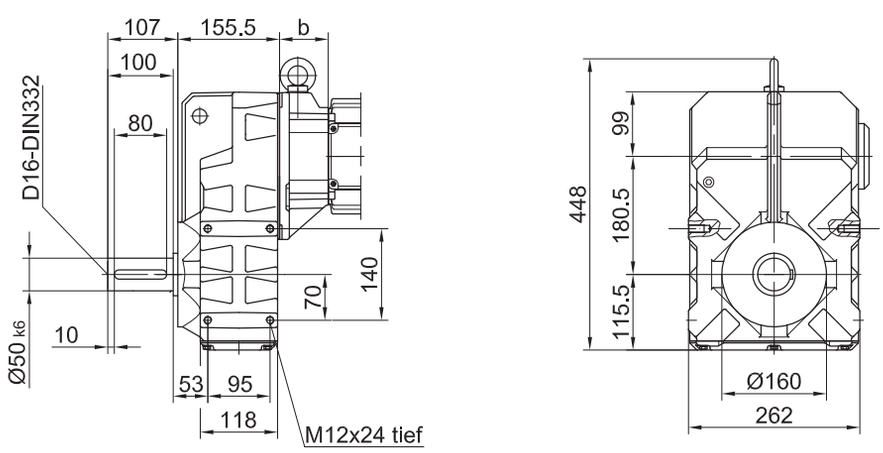

The actual gearbox design can vary from the geometry shown.

BF50 - BF50Z

mit Drehmomentstütze

Code -0./

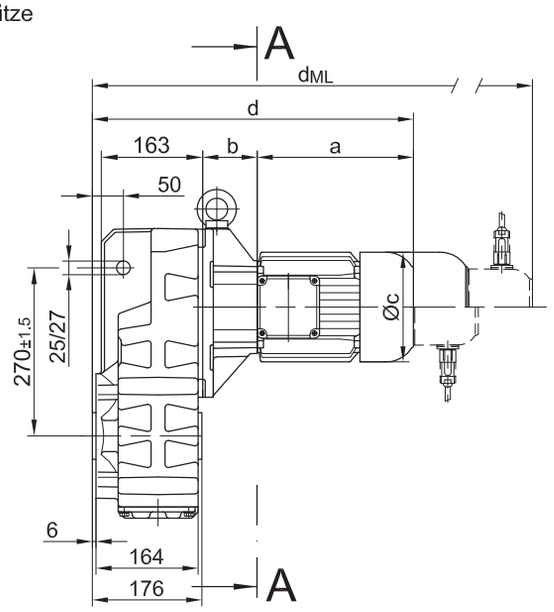

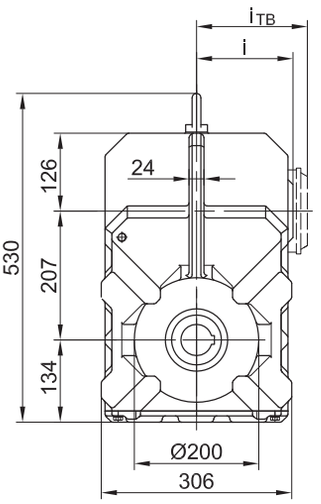

Code -.4/

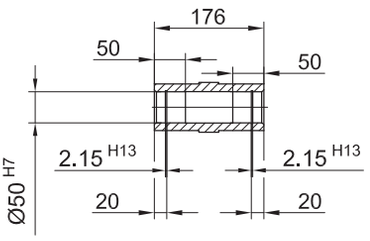

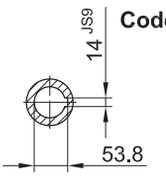

Code -.1/

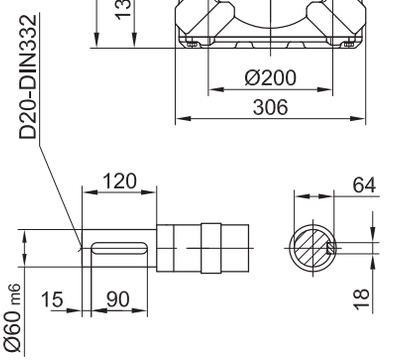

Code -.5/

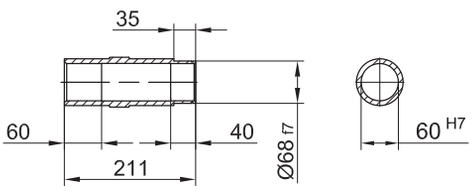

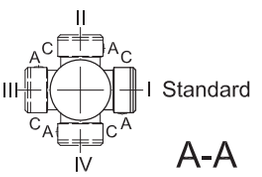

Typ	a	b	c	d	i	i_{TB}	Ausführung mit Motoranbauten			
							ES../ZS..	G	ES../ZS..-G	RR/RL
							d_{ML}	d_{ML}	d_{ML}	d_{ML}
BF50Z-../D05..	170	155	123	503	100	129.5	544	606	647	-
BF50Z-../D06..	170	155	123	503	100	131.5	544	606	647	-
BF50Z-../D07..	190	155	123	523	100	131.5	464	626	667	-
BF50-../D..08..	200	73	156	450	115	149.5	516	557	623	516
BF50Z-../D..08..	200	159	156	536	115	149.5	602	643	709	602
BF50-../D..09..	251	87.5	181	516	124	164	603	623	710	603
BF50Z-../D..09..	251	173.5	181	602	124	164	689	709	796	689
BF50-../D..11..	319	94	228	591	181	181	687	698	794	687
BF50-../D..13..	393	107	266	678	217	217	774	785	881	774
BF50-../D..16..	429	121	322	728	243	243	836	836	944	836

The actual gearbox design can vary from the geometry shown.

BF50 - BF50Z

Flansch mit Gewindelöchern

Code -7./

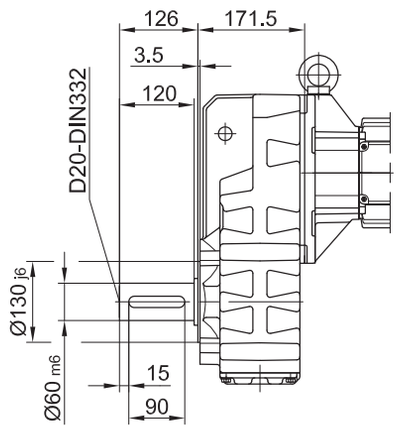

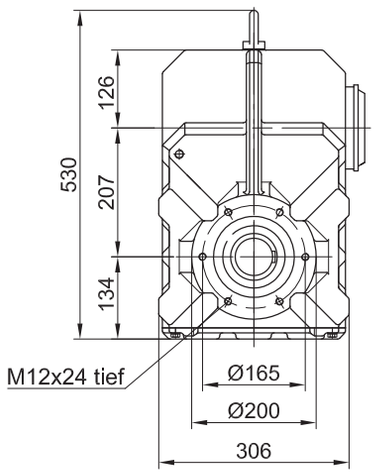

Flansch mit Durchgangslöchern

Code -3./
(Code -2./)

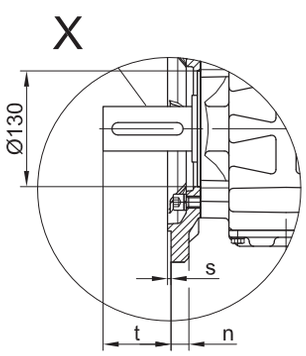

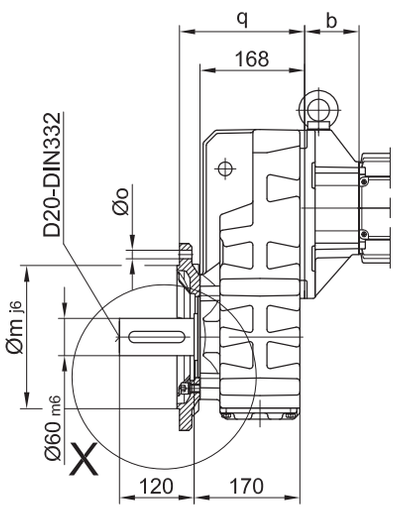

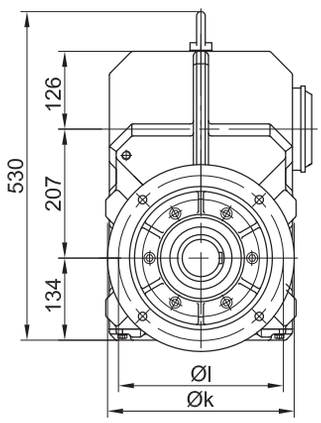

Flanschmasse

BF50(Z)	k	l	m	n	o	q	s	t
Standard -3./	300	265	230	20	13.5	201	4	96.5
klein -2./	250	215	180	16	13.5	198	4	99.5

Fuss mit Gewindelöchern links und rechts

Code -6.LR/

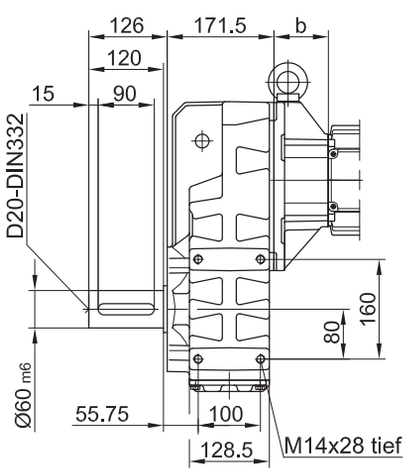

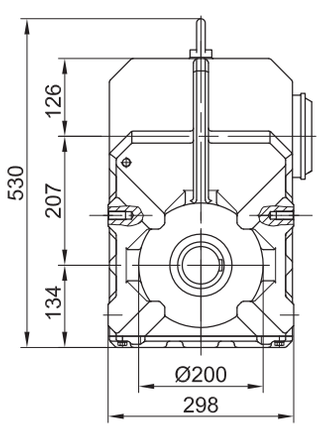

The actual gearbox design can vary from the geometry shown.

BF60 - BF60Z

mit Drehmomentstütze

Code -0./

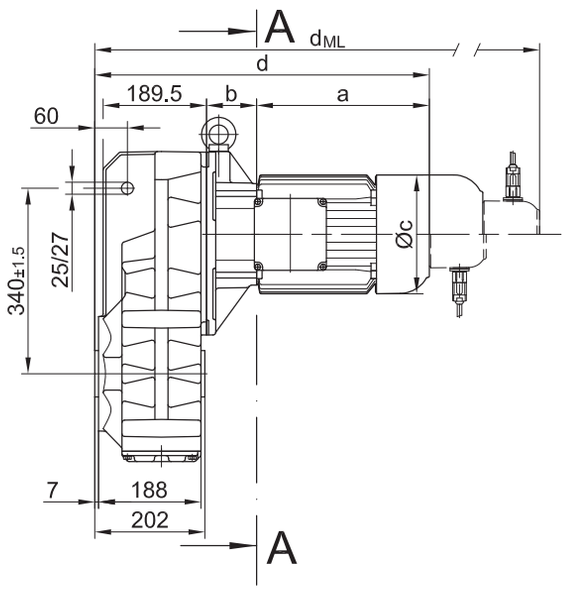

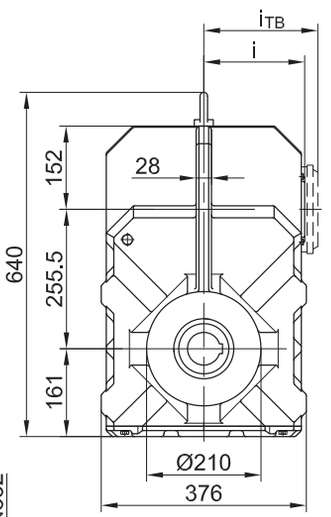

Code -.4/

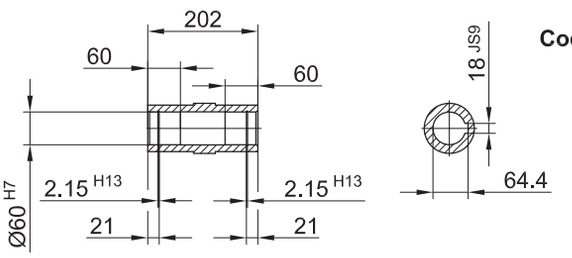

Code -.1/

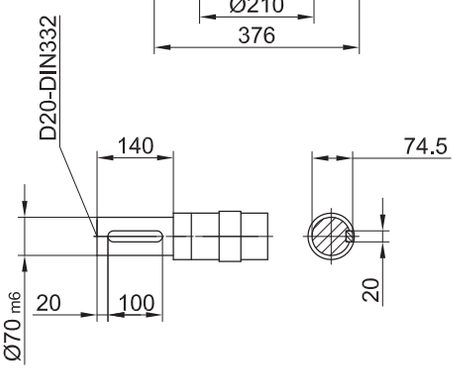

Code -.5/

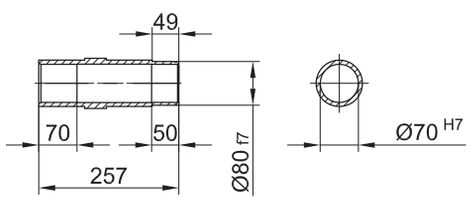

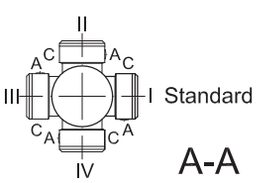

Typ	a	b	c	d	i	Ausführung mit Motoranbauten				
						i_{TB}	ES../ZS..	G	ES../ZS..-G	RR/RL
							d_{ML}	d_{ML}	d_{ML}	d_{ML}
BF60Z-../D..08..	200	181	156	586	115	149.5	652	693	759	652
BF60-../D..09..	251	85.5	181	540	124	164	627	647	734	627
BF60Z-../D..09..	251	195.5	181	651	124	164	738	758	845	738
BF60-../D..11..	319	92	228	616	181	181	724	723	831	724
BF60Z-../D..11..	319	202	228	726	181	181	822	833	929	822
BF60-../D..13..	393	105	266	703	217	217	811	810	918	811
BF60-../D..16..	429	119	322	753	243	243	897	861	1005	897

The actual gearbox design can vary from the geometry shown.

BF60 - BF60Z

Flansch mit Gewindelöchern

Code -7./

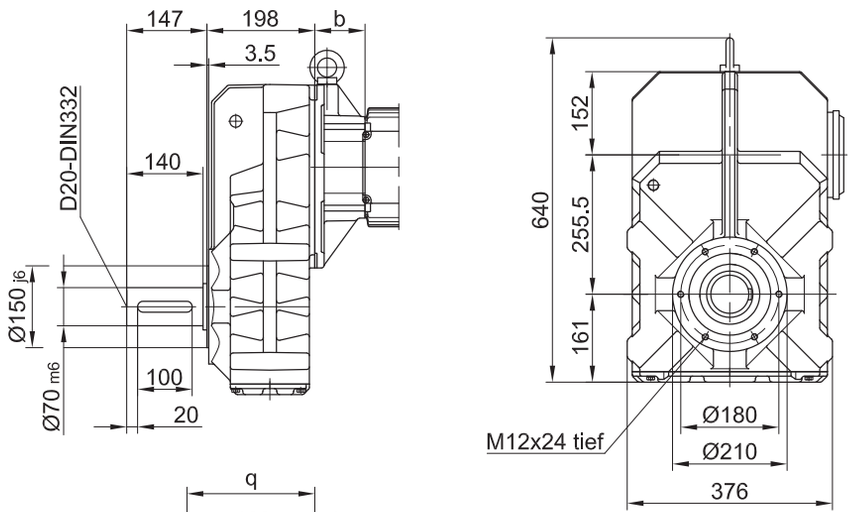

Flansch mit Durchgangslöchern

Code -3./
(Code -2./)

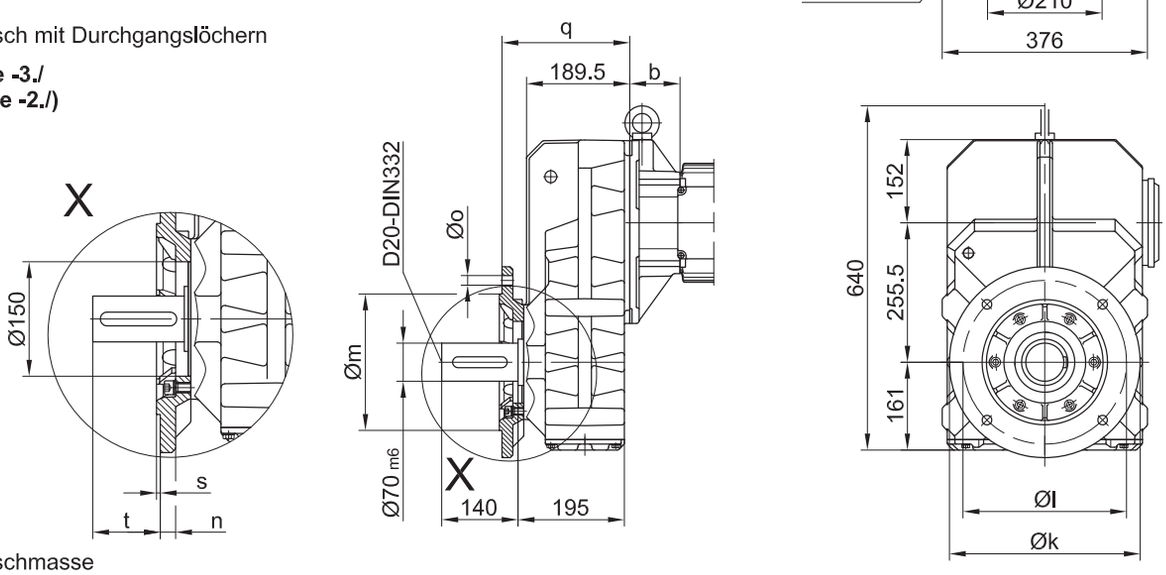

Flanschmasse

BF60(Z)	k	l	m	n	o	q	s	t
Standard -3./	350	300	250 h6	20	17.5	234.5	5	110.5
klein -2./	300	265	230 j6	20	13.5	242.5	4	102.5

Fuss mit Gewindelöchern links und rechts

Code -6.LR/

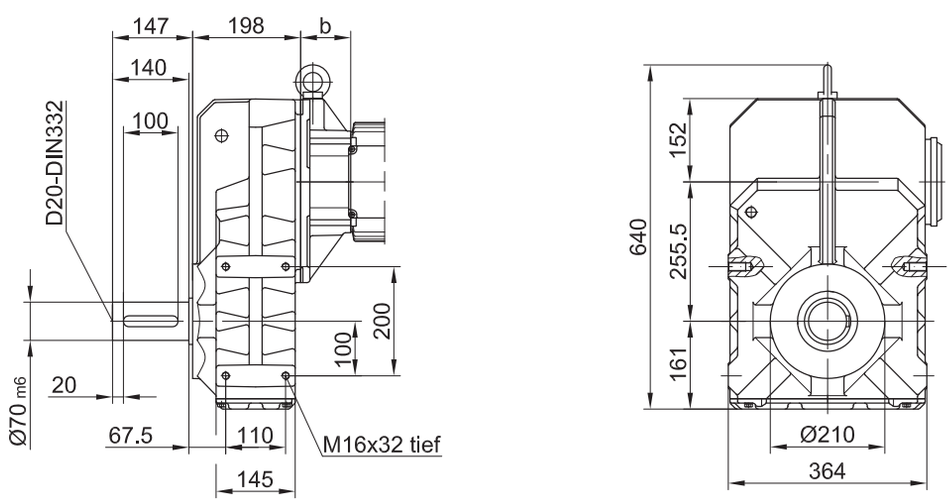

The actual gearbox design can vary from the geometry shown.

BF70 - BF70Z

mit Drehmomentstütze

Code -0./

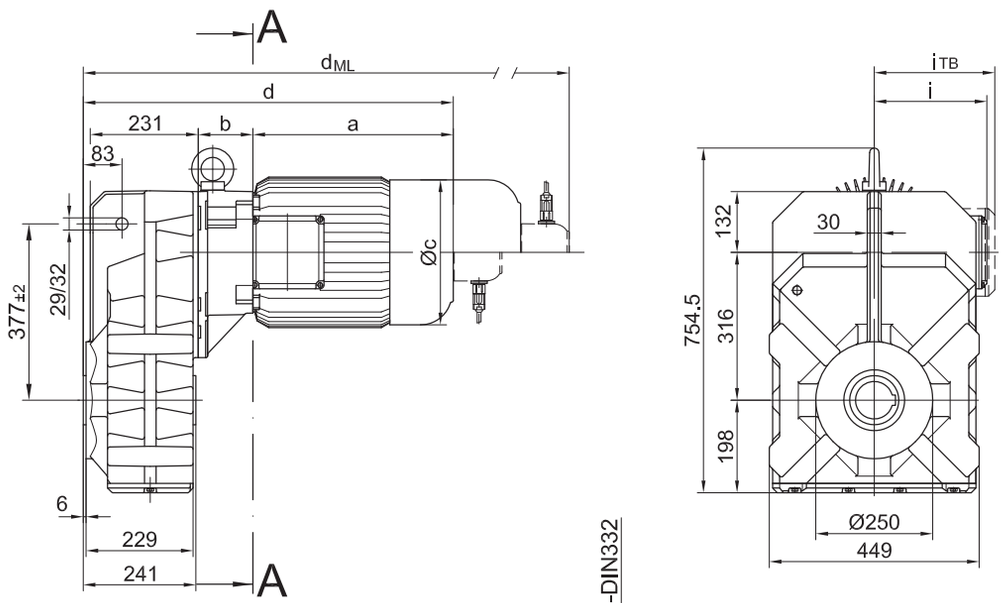

Code -.4/

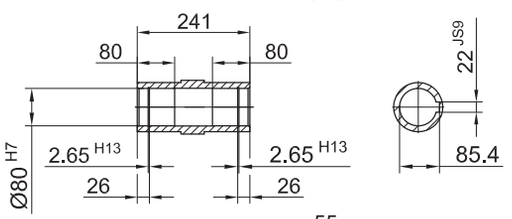

Code -.1/

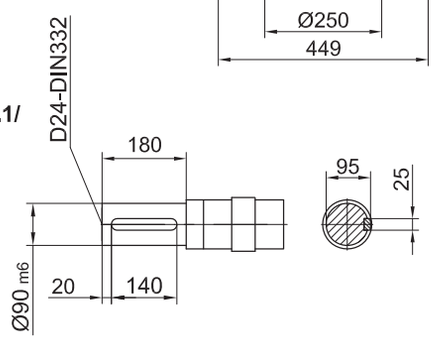

Code -.5/

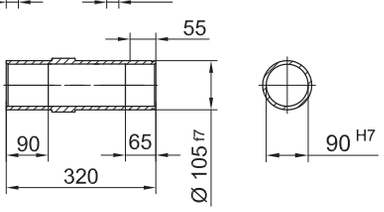

Code -.4/K70

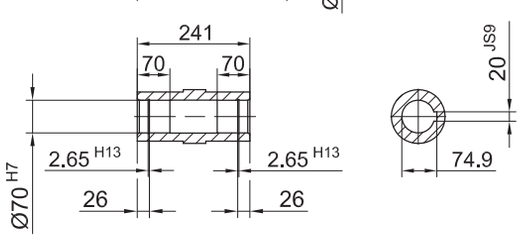

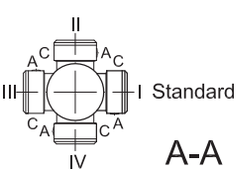

Typ	a	b	c	d	i	Ausführung mit Motoranbauten				
						i_{TB}	ES../ZS..	G	ES../ZS..-G	RR/RL
							d_{ML}	d_{ML}	d_{ML}	d_{ML}
BF70Z-../D..08..	200	202	156	648	115	149.5	714	755	821	714
BF70-../D..09..	251	83.5	181	580	124	164	667	687	774	667
BF70Z-../D..09..	251	216.5	181	713	124	164	800	820	907	800
BF70-../D..11..	319	90	228	655	181	181	751	762	858	751
BF70Z-../D..11..	319	223	228	788	181	181	884	895	993	884
BF70-../D..13..	393	103	266	742	217	217	850	849	957	850
BF70Z-../D..13..	393	236	266	875	217	217	983	982	1090	983
BF70-../D..16..	429	117	322	792	243	243	936	900	1044	936
BF70Z-../D..16..	429	250	322	925	243	243	1069	1033	1177	1069
BF70-../D..18..	528	139	368	913	288	288	1062	1021	1170	1062

The actual gearbox design can vary from the geometry shown.

BF70 - BF70Z

Flansch mit Gewindelöchern
Code -7./

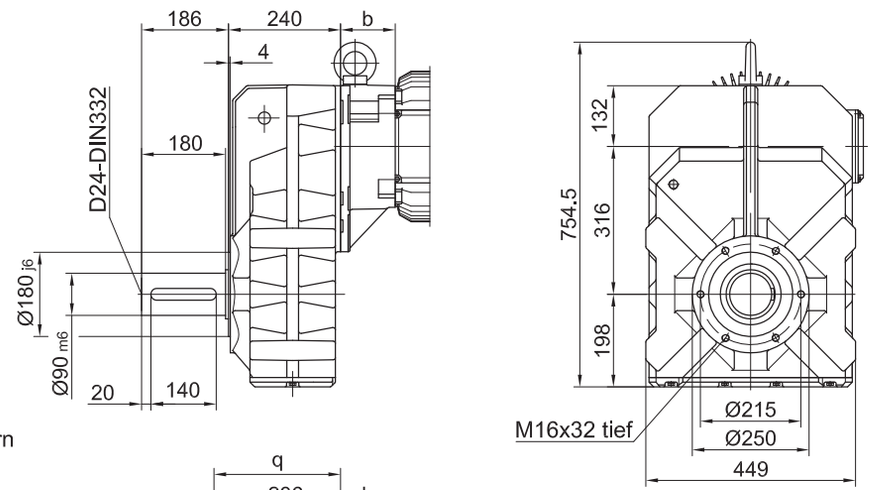

Flansch mit Durchgangslöchern
Code -3./
(Code -2./)
(Code -4./)

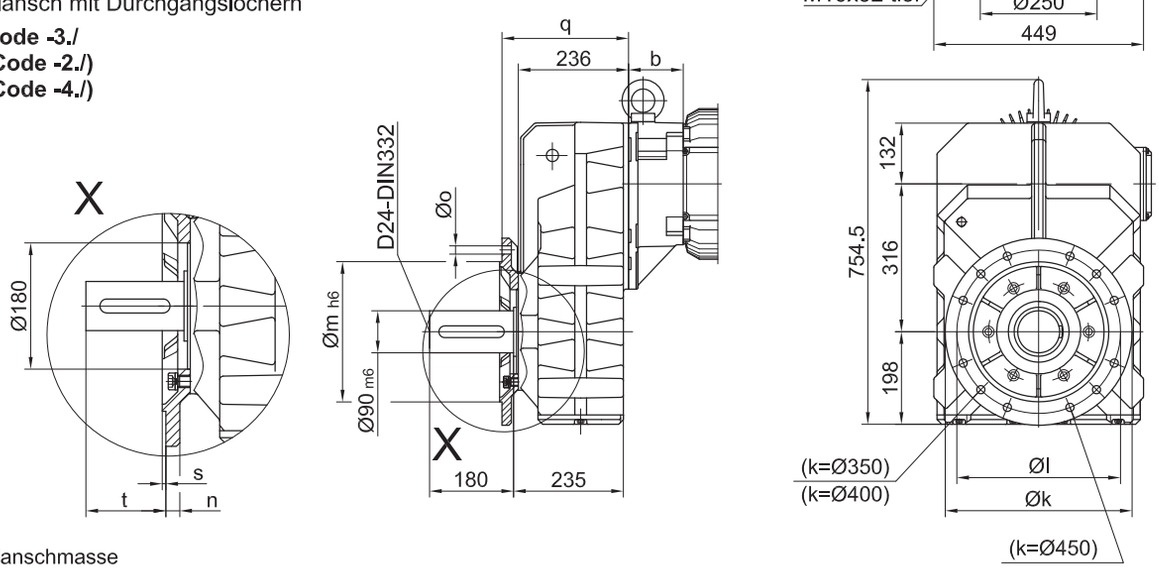

Flanschmasse

BF70(Z)	k	l	m	n	o	q	s	t
Standard -3./	400	350	300	20	4xØ17.5	271	5	155
klein -2./	350	300	250	20	4xØ17.5	271	5	155
gross -4./	450	400	350	22	8xØ17.5	281	5	145

Fuss mit Gewindelöchern links und rechts
Code -6.LR/

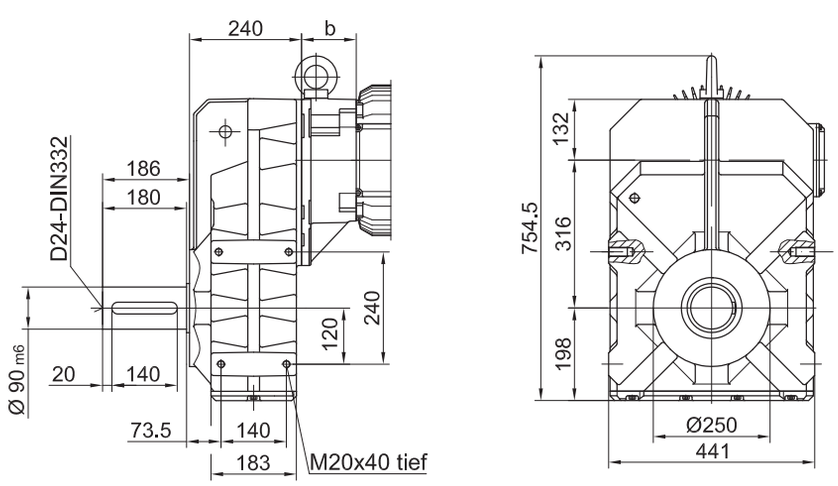

The actual gearbox design can vary from the geometry shown.

BF80 - BF80Z

mit Drehmomentstütze

Code -0./

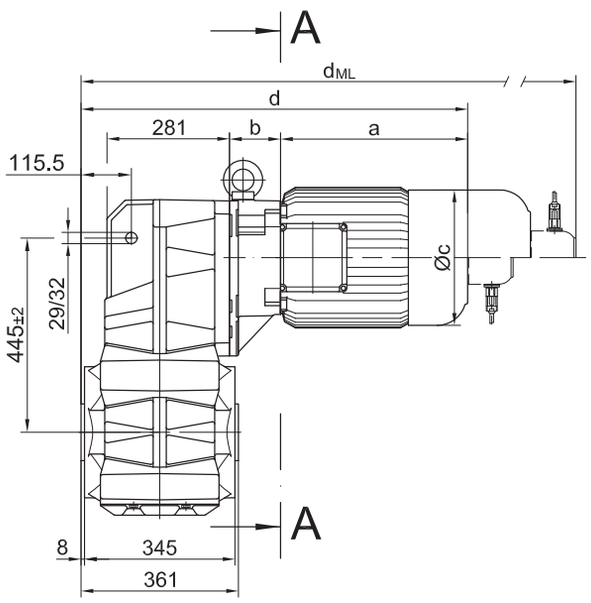

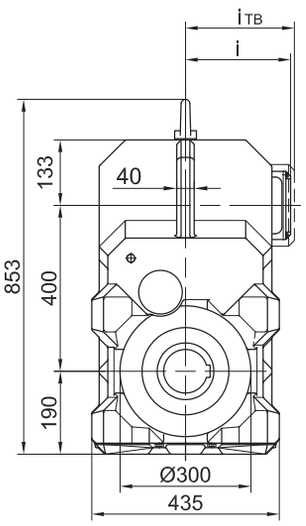

Code -.4/

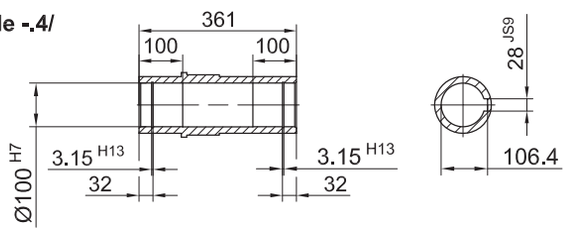

Code -.1/

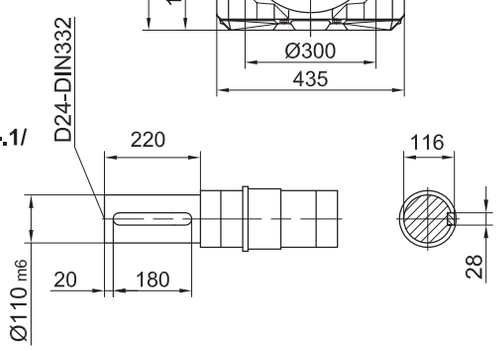

Code -.5/

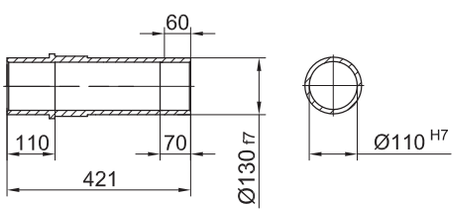

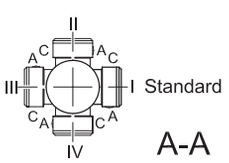

Typ	a	b	c	d	i	Ausführung mit Motoranbauten				
						i_{TB}	ES../ZS..	G	ES../ZS..-G	RR/RL
							d_{ML}	d_{ML}	d_{ML}	d_{ML}
BF80Z-../D..08..	200	202	156	742	115	149.5	808	849	915	808
BF80-../D..09..	251	83.5	181	675	124	164	762	783	869	762
BF80Z-../D..09..	251	216.5	181	808	124	164	895	915	1002	895
BF80-../D..11..	319	90	228	750	181	181	846	857	953	846
BF80Z-../D..11..	319	223	228	883	181	181	979	990	1086	979
BF80-../D..13..	393	100	266	834	217	217	942	941	1049	942
BF80Z-../D..13..	393	236	266	970	217	217	1078	1077	1185	1078
BF80-../D..16..	429	114	322	887	243	243	1031	995	1139	1031
BF80Z-../D..16..	429	250	322	1020	243	243	1164	1128	1372	1164
BF80-../D..18..	528	139	368	1007	288	288	1156	1115	1264	1156

The actual gearbox design can vary from the geometry shown.

BF80 - BF80Z

Flansch mit Gewindelöchern

Code -7./

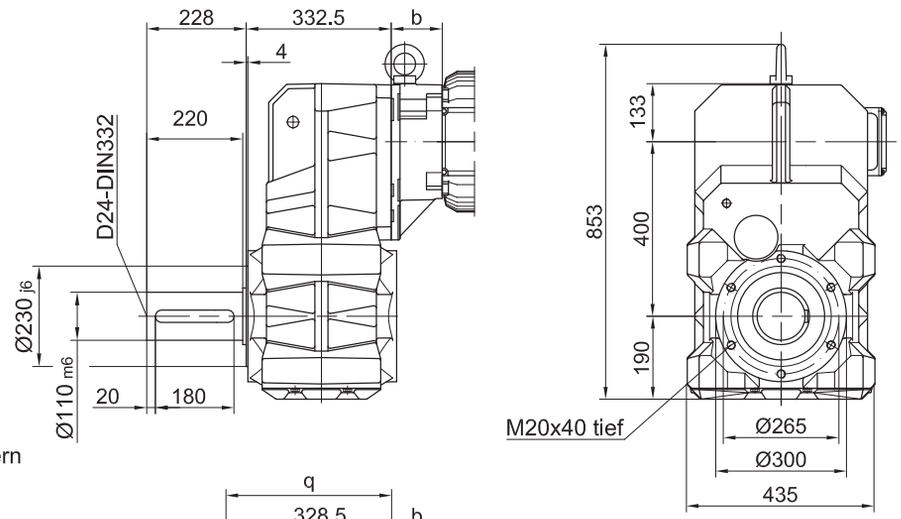

Flansch mit Durchgangslöchern

Code -3./
(Code -4./)

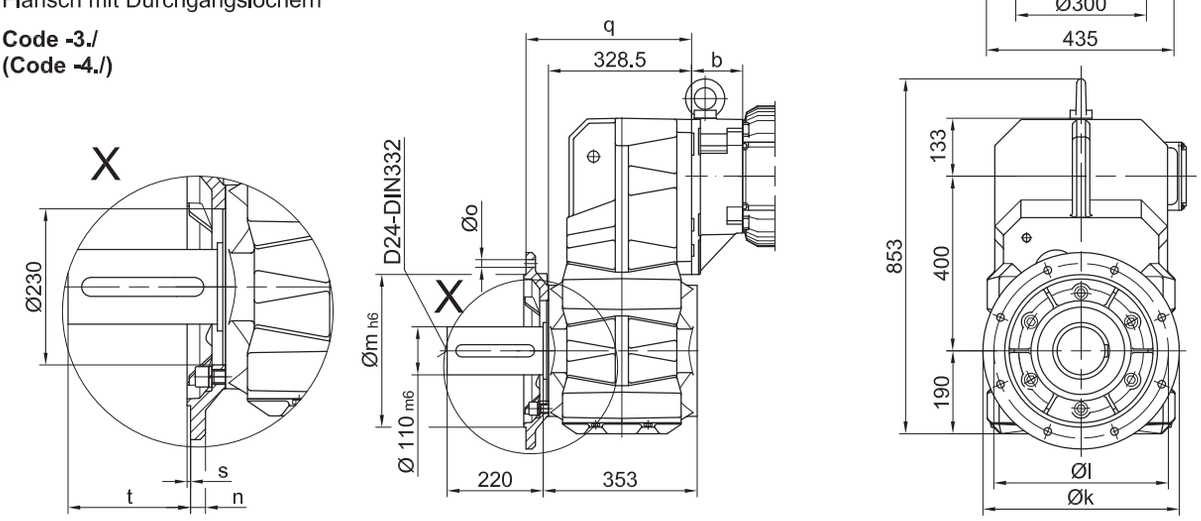

Flanschmasse

BF80(Z)	k	l	m	n	o	q	s	t
Standard -3./	450	400	350	22	17.5	383.5	5	177
gross -4./	550	500	450	22	17.5	388.5	5	172

Fuss mit Durchgangslöchern links und rechts

Code -1.LR/

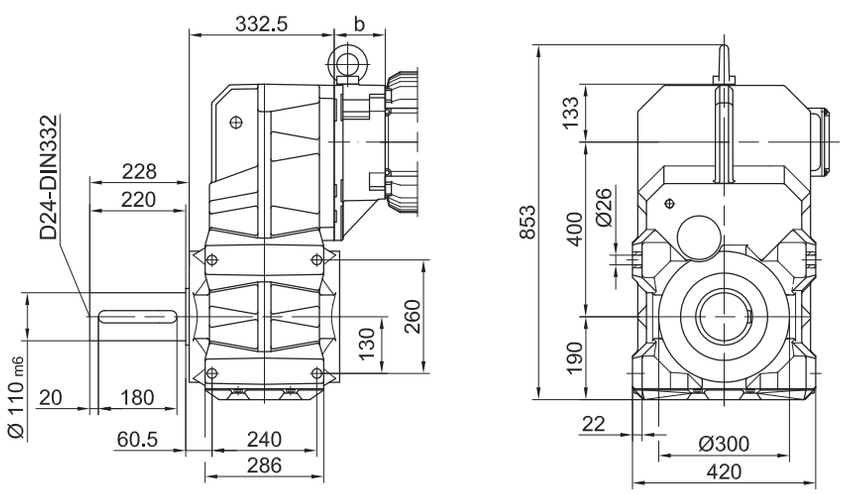

The actual gearbox design can vary from the geometry shown.

BF90 - BF90Z

mit Drehmomentstütze

Code -0./

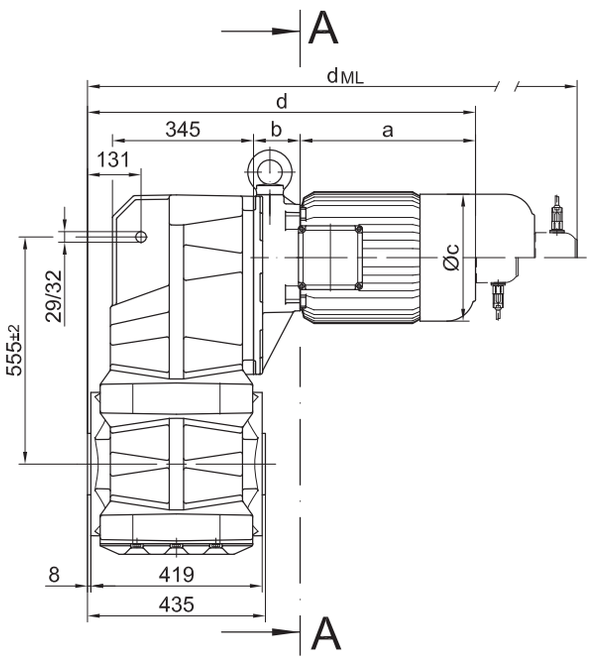

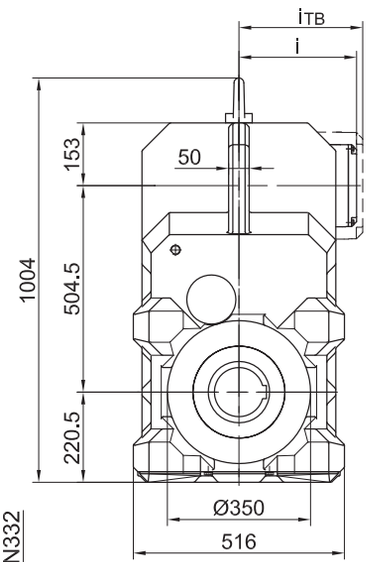

Code -.4/

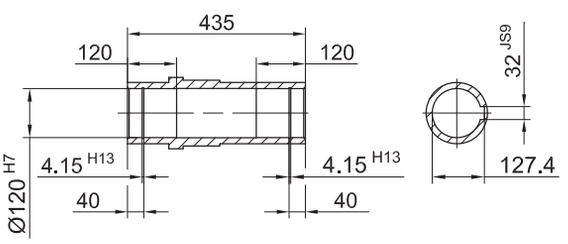

Code -.1/

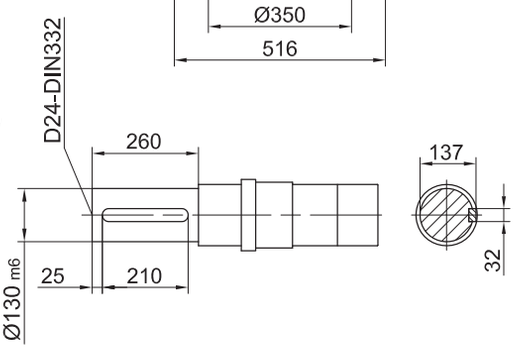

Code -.5/

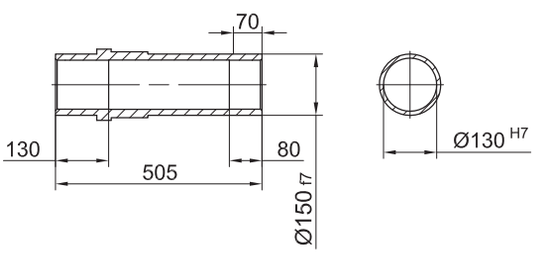

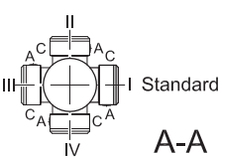

Typ	a	b	c	d	i	i_{TB}	Ausführung mit Motoranbauten			
							ES../ZS..	G	ES../ZS..-G	RR/RL
							d_{ML}	d_{ML}	d_{ML}	d_{ML}
BF90Z-../D..09..	251	252.5	181	909	124	164	916	1017	1024	916
BF90-../D..11..	319	87	228	812	181	181	908	920	1016	908
BF90Z-../D..11..	319	259	228	984	181	181	1080	1092	1187	1080
BF90-../D..13..	393	100	266	899	217	217	1007	1006	1113	1007
BF90Z-../D..13..	393	272	266	1071	217	217	1179	1178	1286	1179
BF90-../D..16..	429	114	322	949	243	243	1093	1057	1111	1093
BF90Z-../D..16..	429	286	322	1121	243	243	1265	1229	1373	1265
BF90-../D..18..	528	136	368	1060	288	288	1209	1168	1317	1209

The actual gearbox design can vary from the geometry shown.

BF90 - BF90Z

Flansch mit Gewindelöchern

Code -7./

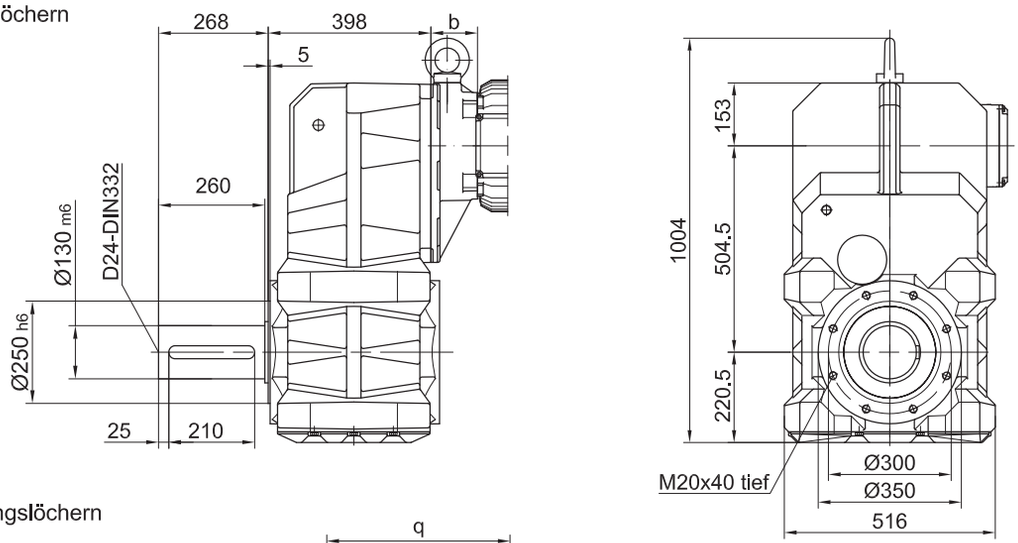

Flansch mit Durchgangslöchern

Code -3./
(Code -4./)

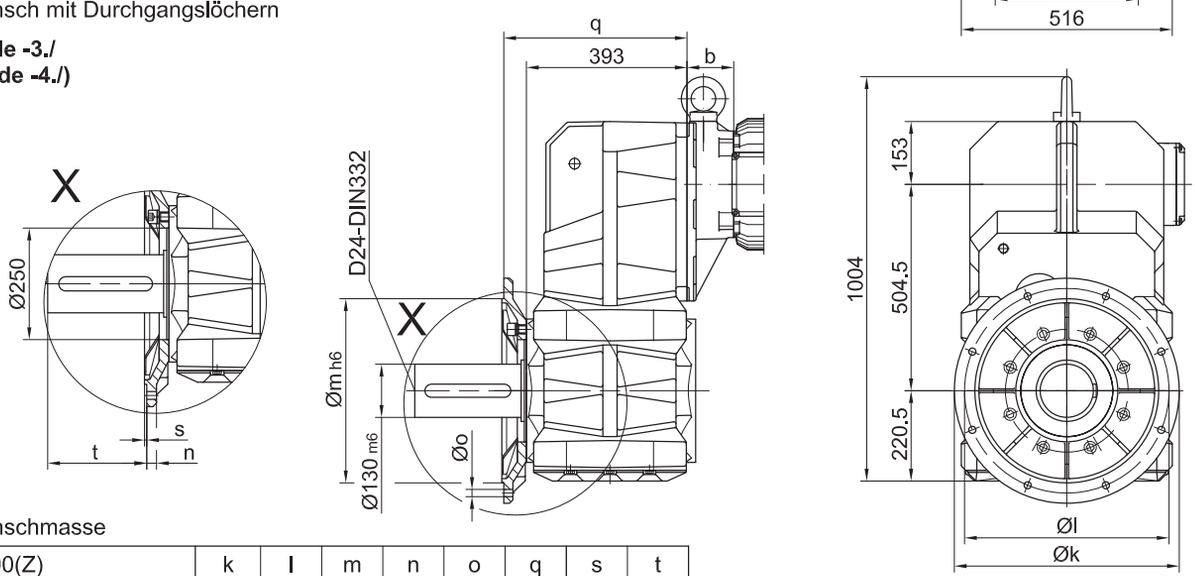

Flanschmasse

BF90(Z)	k	l	m	n	o	q	s	t
Standard -3./	550	500	450	22	17.5	448	5	218
gross -4./	660	600	550	25	22	442	6	224

Fuss mit Durchgangslöchern links und rechts

Code -1.LR/

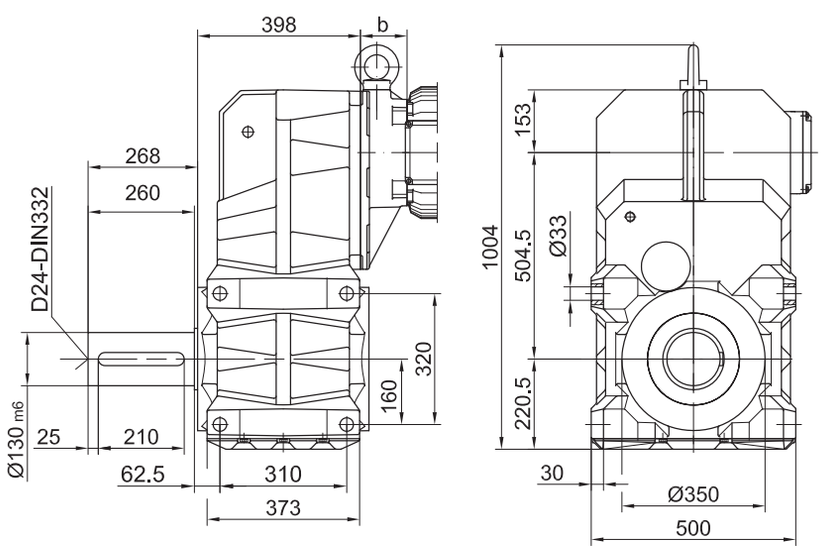

The actual gearbox design can vary from the geometry shown.

BF10G06

mit Drehmomentstütze

Code -0./

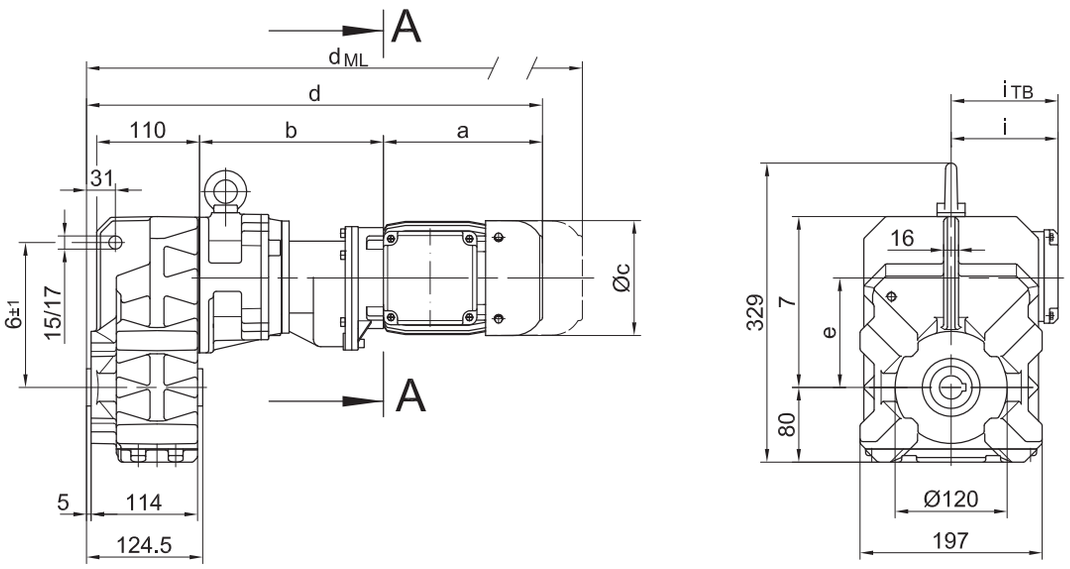

Code -.4/

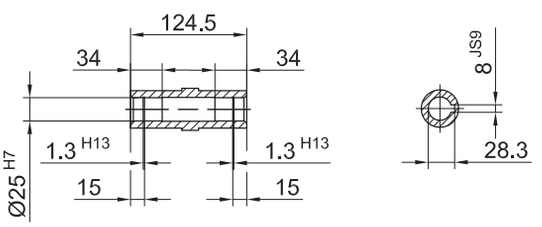

Code -.1/

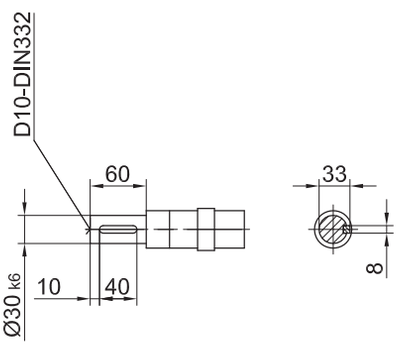

Code -.5/

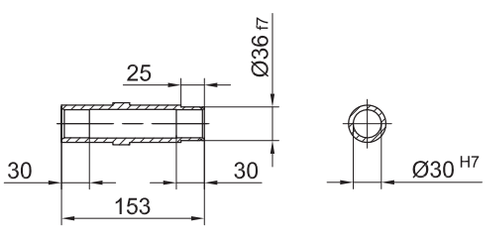

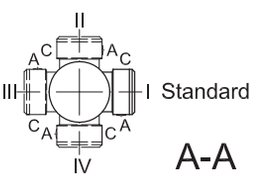

Typ	a	b	c	d	e	i	Ausführung mit Motoranbauten				
							i_{TB}	ES../ZS..	G	ES../ZS..-G	RR/RL
								d_{ML}	d_{ML}	d_{ML}	d_{ML}
BF10G06-../D04..	143	195	111	459	117	90	124.5	502.5	521.5	565	502.5
BF10G06-../D05..	170	197	123	489	117	100	129.5	530	592	633	530
BF10G06-../D06..	170	197	123	489	117	100	131.5	530	592	633	530
BF10G06-../D07..	190	197	123	509	117	100	131.5	550	512	653	550
BF10G06-../D..08..	200	241	156	562	117	115	149.5	628	669	735	628

The actual gearbox design can vary from the geometry shown.

BF10G06

Flansch mit Gewindelöchern

Code -7./

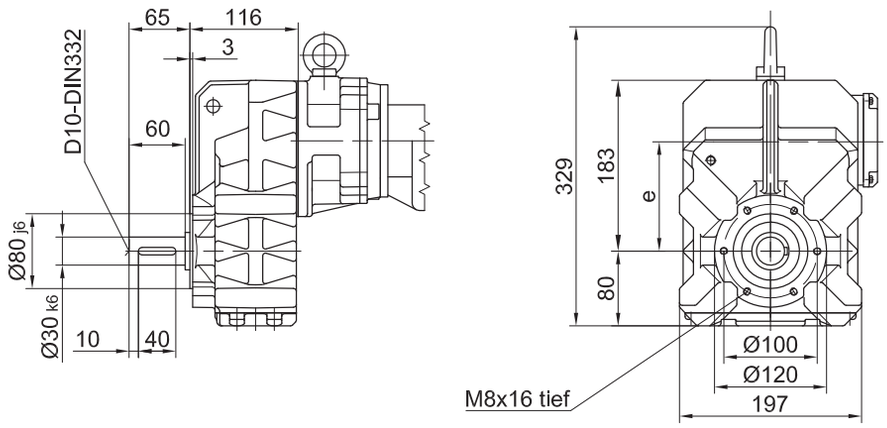

Flansch mit Durchgangslöchern

Code -3./
(Code -2./)

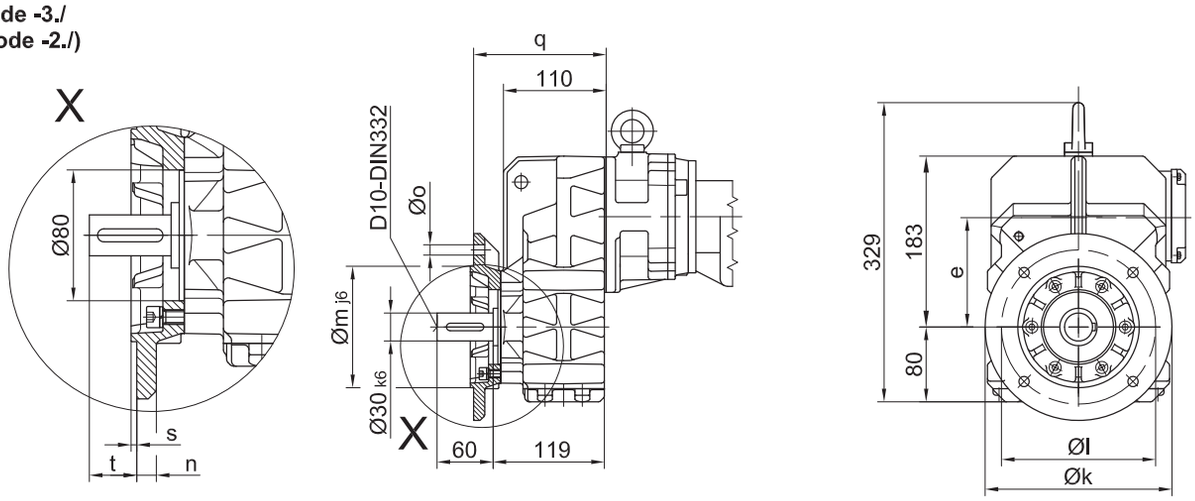

Flanschmasse

BF10G..	k	l	m	n	o	q	s	t
Standard -3./	200	165	130	12	11	142	3.5	39
klein -2./	160	130	110	10	9	135	3.5	46

Fuss mit Gewindelöchern links und rechts

Code -6.LR/

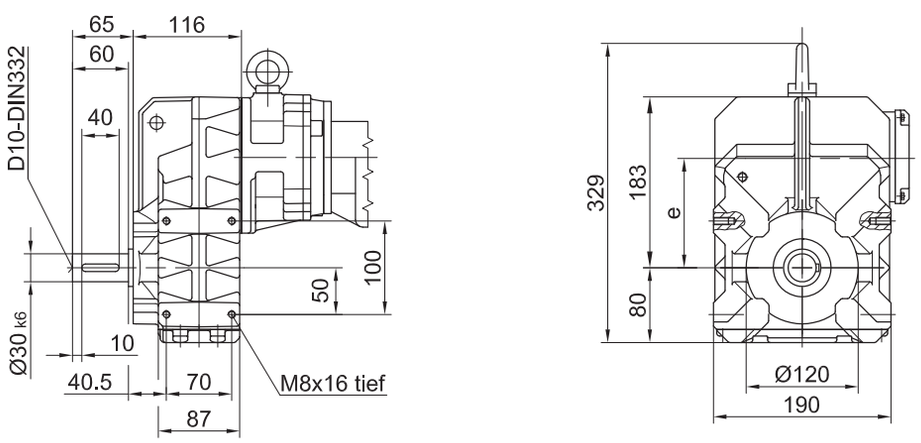

The actual gearbox design can vary from the geometry shown.

BF20G06

mit Drehmomentstütze

Code -0./

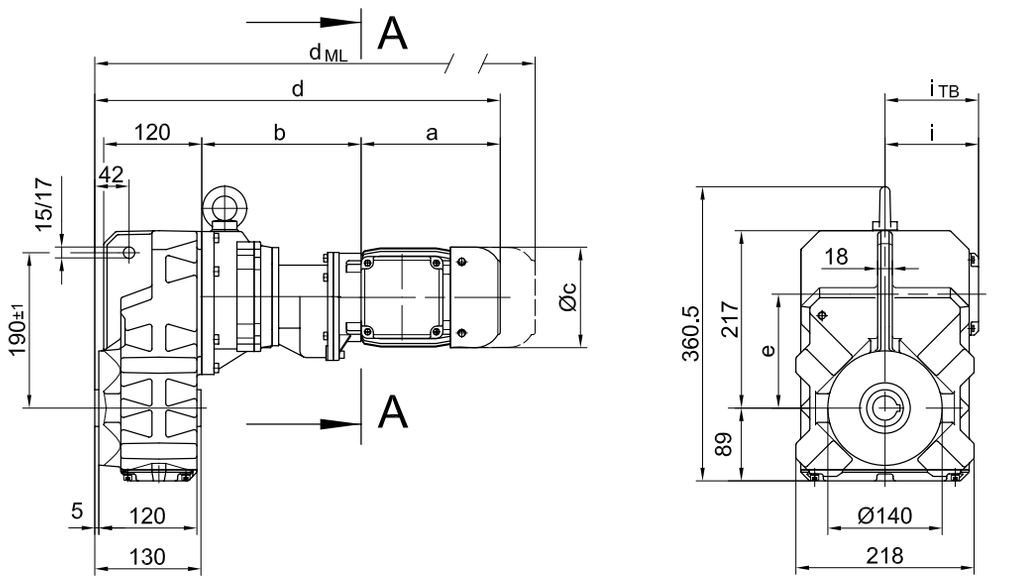

Code -.4/

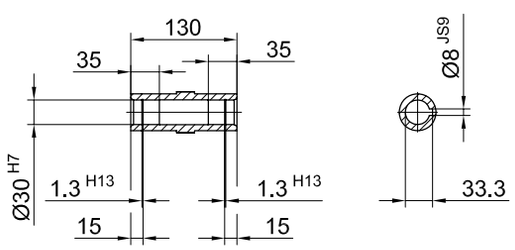

Code -.1/

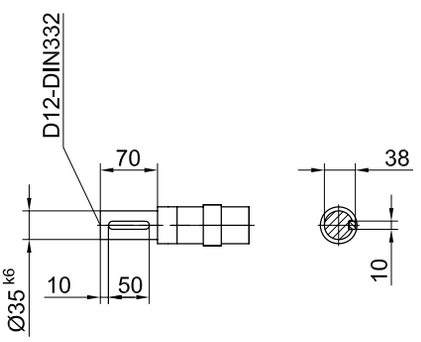

Code -.5/

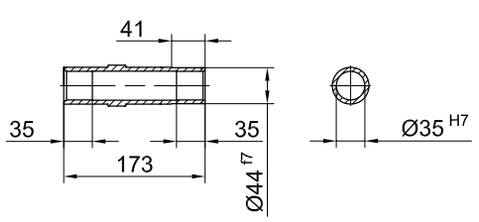

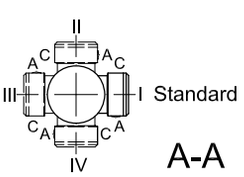

Typ	a	b	c	d	e	i	Ausführung mit Motoranbauten				
							i_{TB}	ES../ZS..	G	ES../ZS..-G	RR/RL
								d_{ML}	d_{ML}	d_{ML}	d_{ML}
BF20G06-../D04..	143	193	111	467	135	90	124.5	510.5	529.5	573	-
BF20G06-../D05..	170	195	123	497	135	100	129.5	538	600	641	-
BF20G06-../D06..	170	195	123	497	135	100	131.5	538	600	641	-
BF20G06-../D07..	190	195	123	517	135	100	131.5	558	620	661	-
BF20G06-../D..08..	200	239	156	570	135	115	149.5	636	677	743	636

The actual gearbox design can vary from the geometry shown.

BF20G06

Flansch mit Gewindelöchern

Code -7./

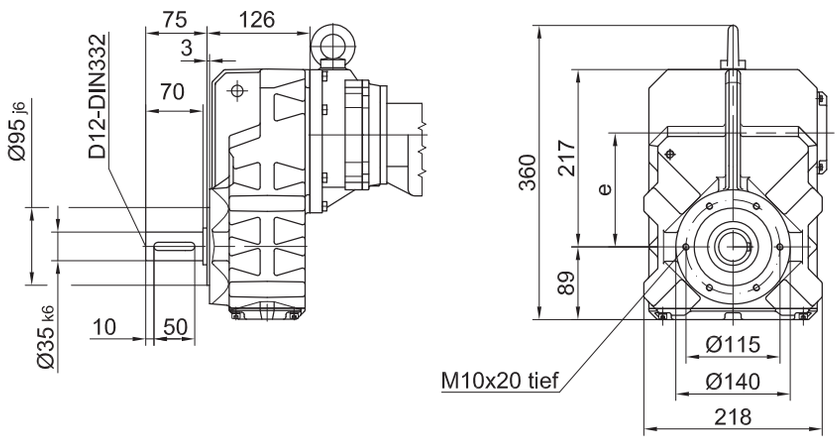

Flansch mit Durchgangslöchern

Code -3./
(Code -2./)

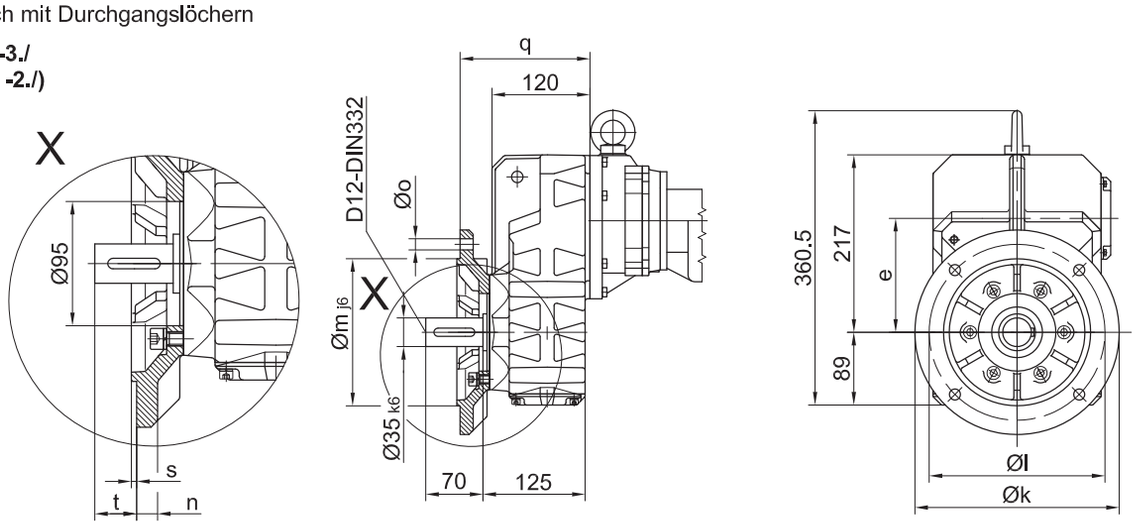

Flanschmasse

BF20G..	k	l	m	n	o	q	s	t
Standard -3./	250	215	180	16	13.5	159	4	42
klein -2./	200	165	130	12	11	150	3.5	51

Fuss mit Gewindelöchern links und rechts

Code -6.LR/

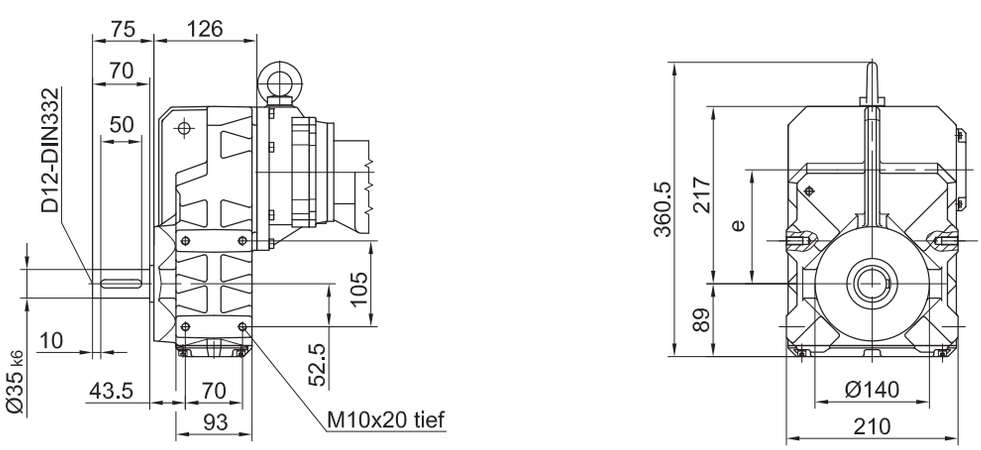

The actual gearbox design can vary from the geometry shown.

BF30G06

mit Drehmomentstütze

Code -0./

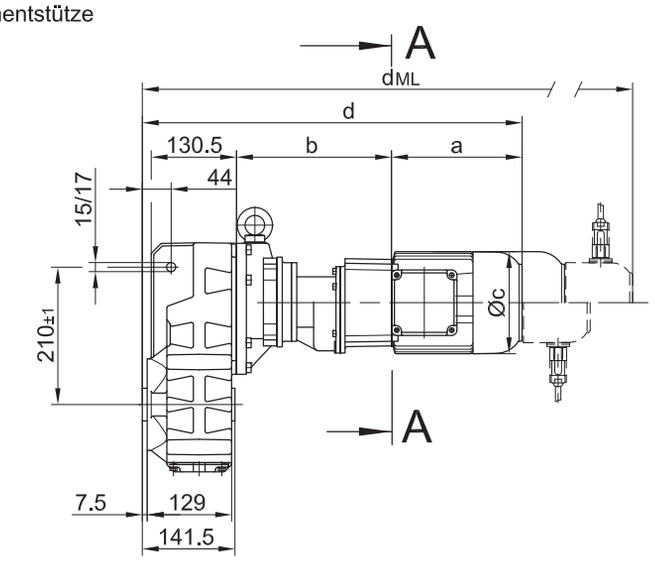

Code -.4/

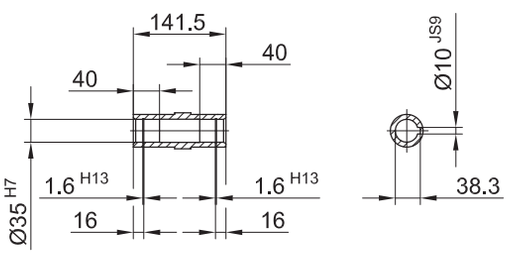

Code -.1/

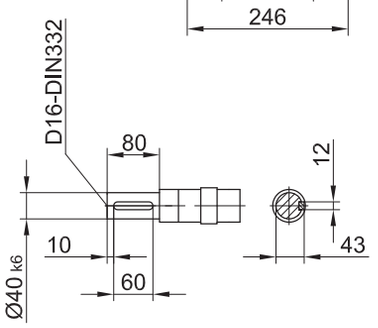

Code -.5/

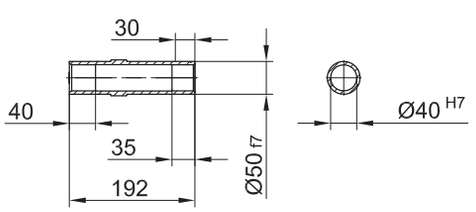

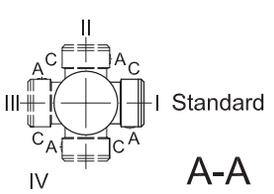

Typ	a	b	c	d	e	i	Ausführung mit Motoranbauten				
							i_{TB}	ES../ZS..	G	ES../ZS..-G	RR/RL
								d_{ML}	d_{ML}	d_{ML}	d_{ML}
BF30G06-../D04..	143	191	111	478	156	90	124.5	521.5	540	584	-
BF30G06-../D05..	170	193	123	508	156	100	129.5	549	611	651	-
BF30G06-../D06..	170	193	123	508	156	100	131.5	549	611	651	-
BF30G06-../D07..	190	193	123	528	156	100	131.5	569	631	671	-
BF30G06-../D..08..	200	237	156	581	156	115	149.5	647	688	654	647

The actual gearbox design can vary from the geometry shown.

BF30G06

Flansch mit Gewindelöchern/

Code -7./

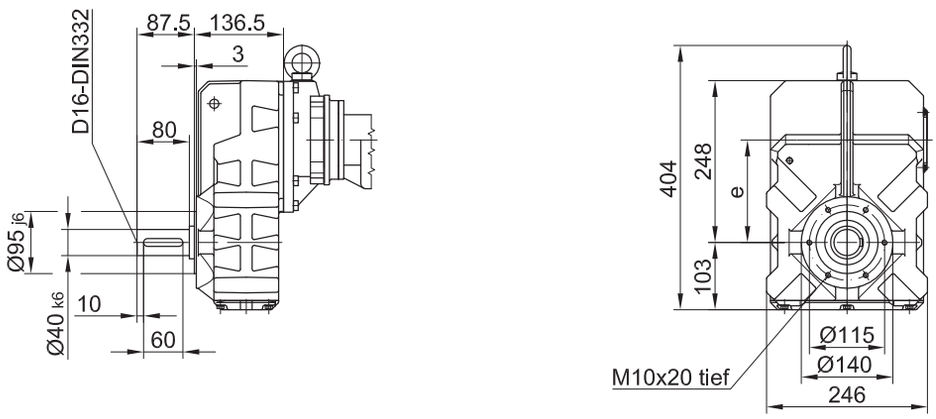

Flansch mit Durchgangslöchern

Code -3./
(Code -2./)

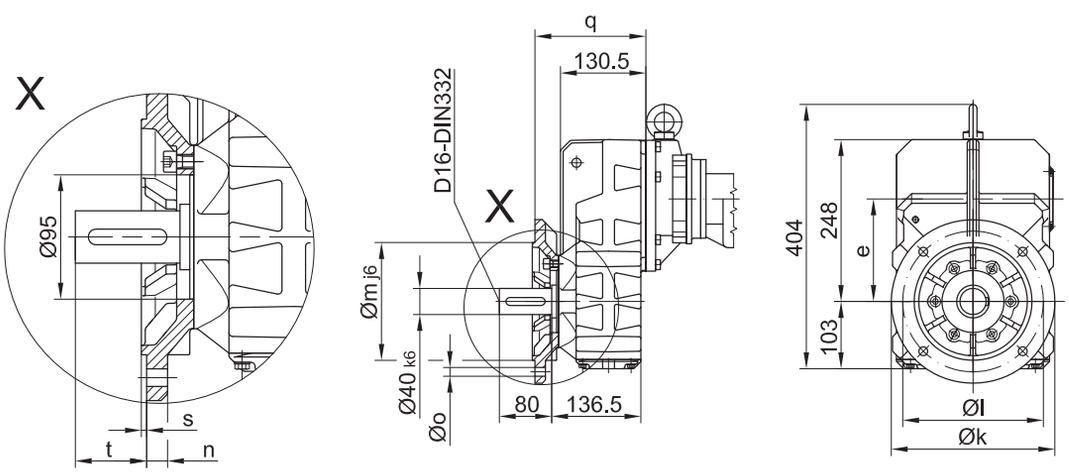

Flanschmasse

BF30G..	k	l	m	n	o	q	s	t
Standard -3./	250	215	180	16	13.5	169.5	4	54.5
klein -2./	200	165	130	12	11	160.5	3.5	63.5

Fuss mit Gewindelöchern links und rechts

Code -6.LR/

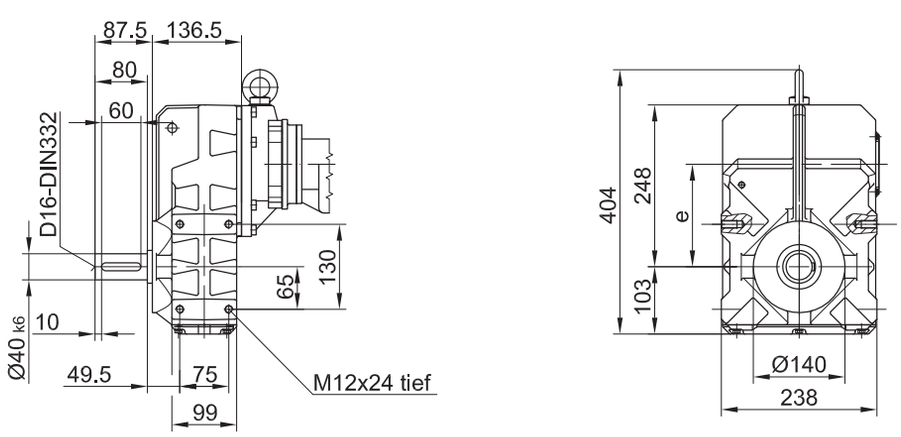

The actual gearbox design can vary from the geometry shown.

BF40G10

mit Drehmomentstütze

Code -0./

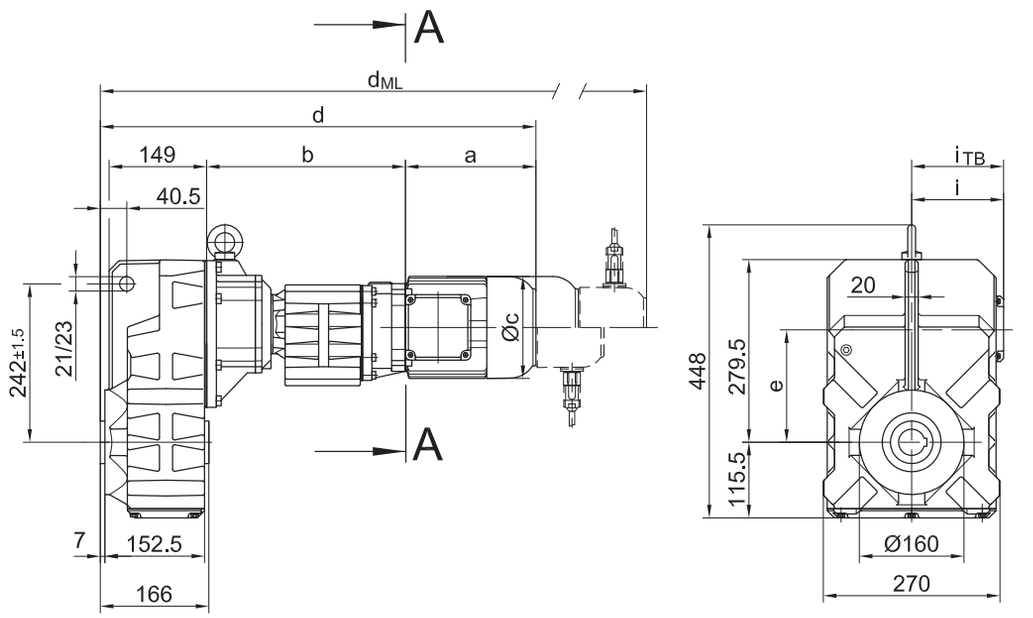

Code -.4/

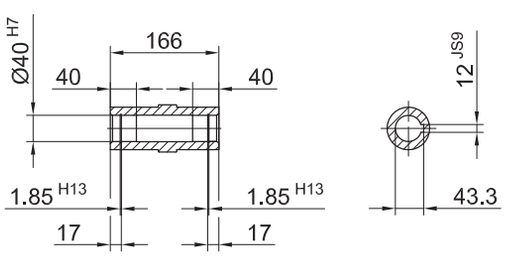

Code -.1/

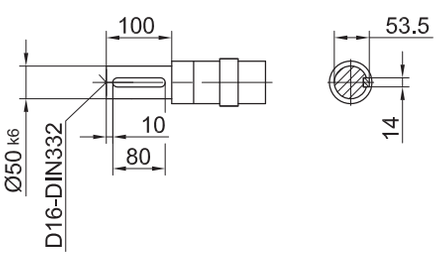

Code -.5/

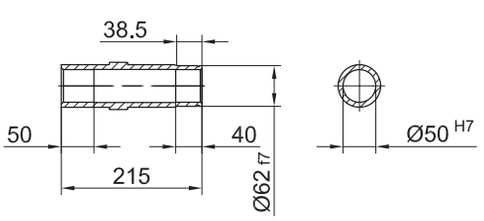

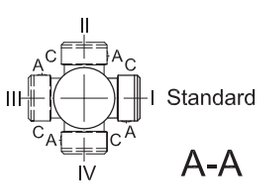

Typ	a	b	c	d	e	i	Ausführung mit Motoranbauten				
							i_{TB}	ES../ZS..	G	ES../ZS..-G	RR/RL
								d_{ML}	d_{ML}	d_{ML}	d_{ML}
BF40G10-../D05..	170	300	123	633	176	100	129.5	674	736	777	-
BF40G10-../D06..	170	300	123	633	176	100	131.5	674	736	777	-
BF40G10-../D07..	190	300	123	653	176	100	131.5	694	756	797	-
BF40G10-../D..08..	200	304	156	666	176	115	149.5	732	773	839	732
BF40G10-../D..09..	251	318.5	181	732	176	124	164	819	839	926	819

The actual gearbox design can vary from the geometry shown.

BF40G10

Flansch mit Gewindelöchern

Code -7./

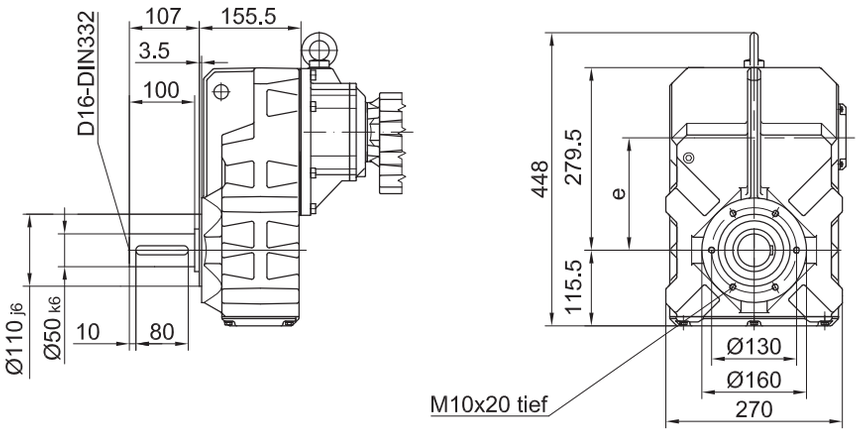

Flansch mit Durchgangslöchern

Code -3./
(Code -4./)

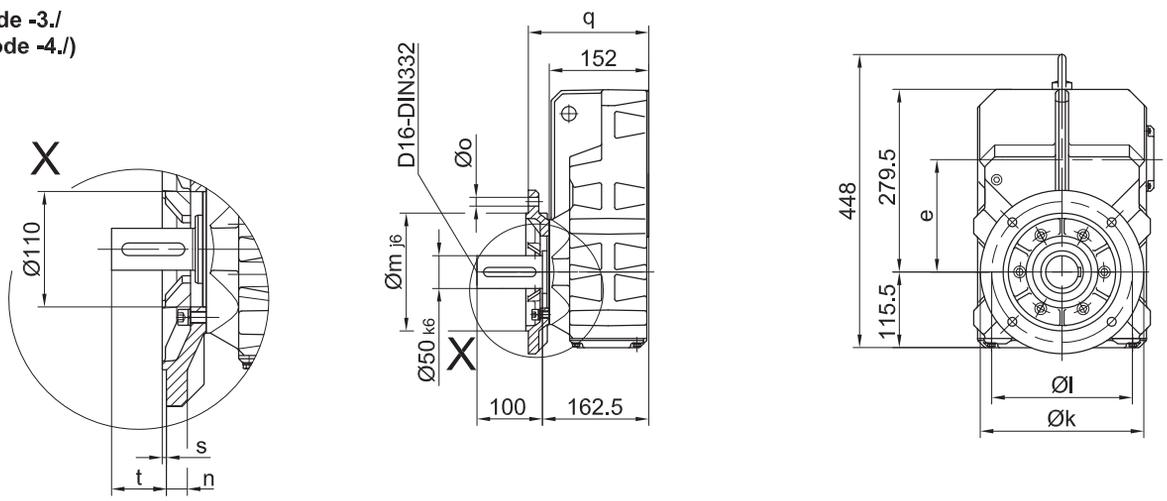

Flanschmasse

BF40G..	k	l	m	n	o	q	s	t
Standard -3./	250	215	180	16	13.5	184	4	78.5
gross -4./	300	265	230	20	13.5	190	4	72.5

Fuss mit Gewindelöchern links und rechts

Code -6.LR/

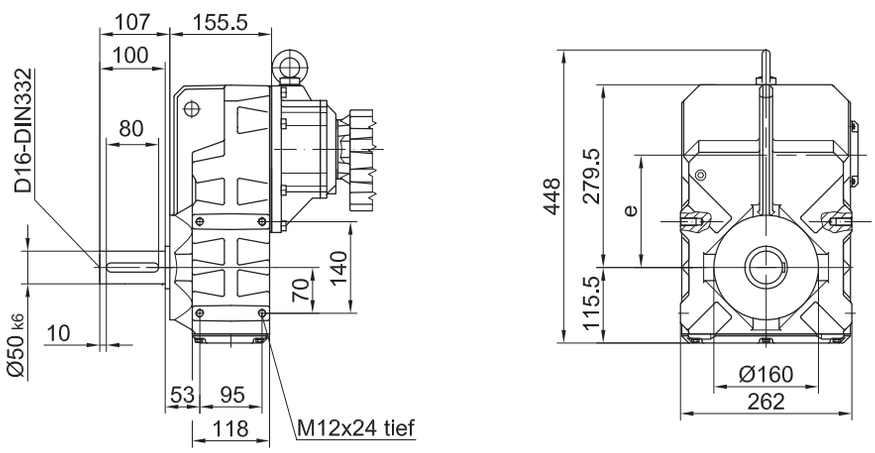

The actual gearbox design can vary from the geometry shown.

BF50G10

mit Drehmomentstütze

Code -0./

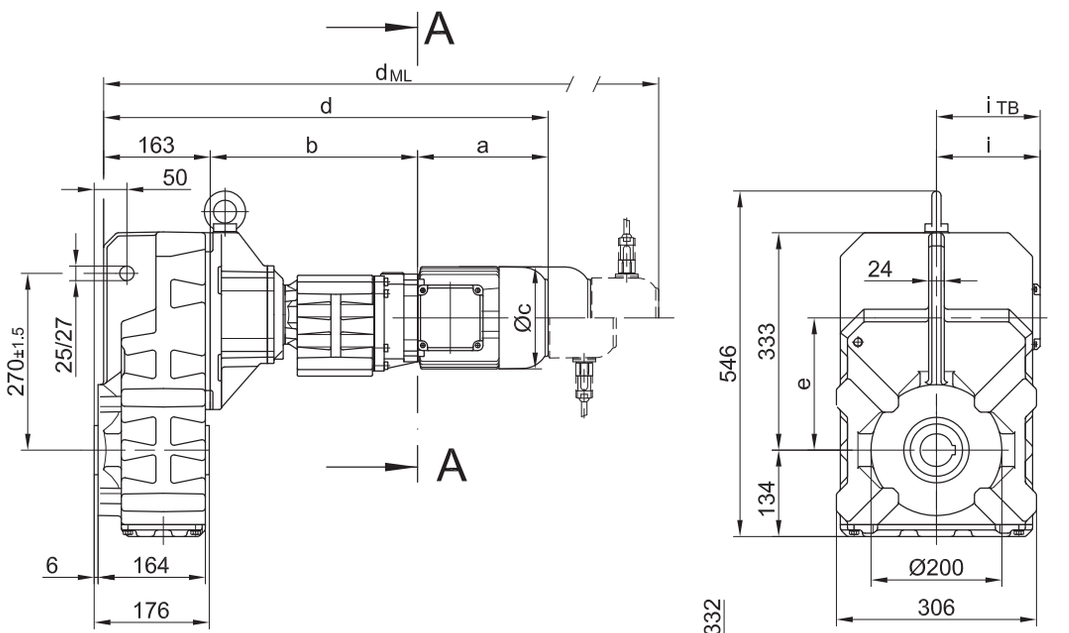

Code -.4/

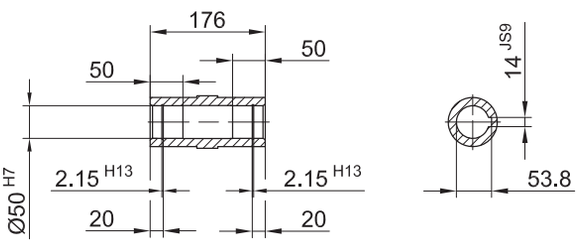

Code -.1/

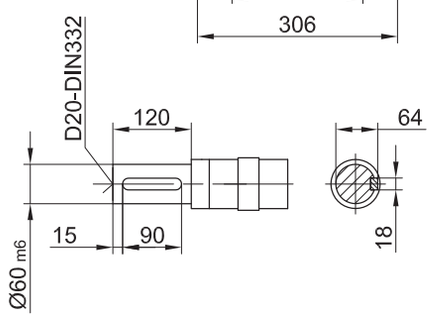

Code -.5/

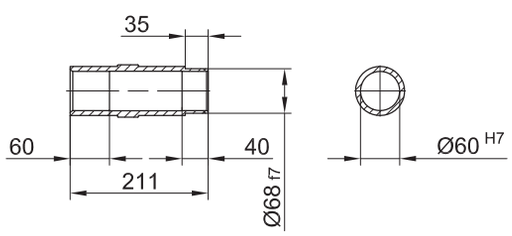

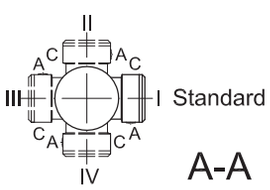

Typ	a	b	c	d	e	i	i_{TB}	Ausführung mit Motoranbauten			
								ES../ZS..	G	ES../ZS..-G	RR/RL
								d_{ML}	d_{ML}	d_{ML}	d_{ML}
BF50G10-../D05..	170	313	123	661	202	100	129.5	702	764	805	-
BF50G10-../D06..	170	313	123	661	202	100	131.5	702	764	805	-
BF50G10-../D07..	190	313	123	681	202	100	131.5	722	784	825	-
BF50G10-../D..08..	200	317	156	694	202	115	149.5	760	801	867	760
BF50G10-../D..09..	251	332	181	760	202	124	164	847	867	954	847

The actual gearbox design can vary from the geometry shown.

BF50G10

Flansch mit Gewindelöchern

Code -7./

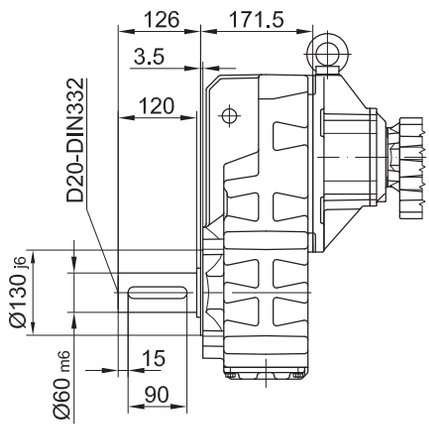

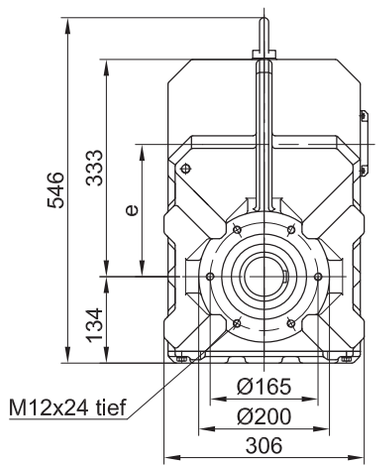

Flansch mit Durchgangslöchern

Code -3./
(Code -2./)

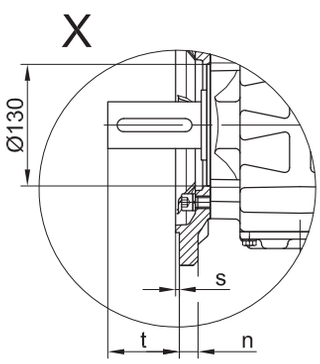

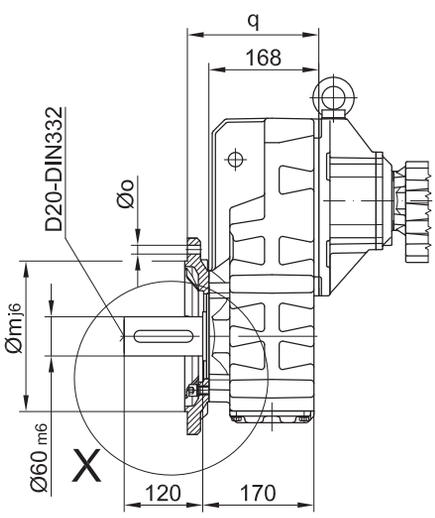

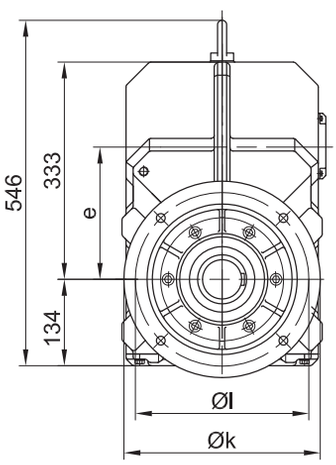

Flanschmasse

BF50G..	k	l	m	n	o	q	s	t
Standard -3./	300	265	230	20	13.5	201	4	96.5
klein -2./	250	215	180	16	13.5	198	4	99.5

Fuss mit Gewindelöchern links und rechts

Code -6.LR/

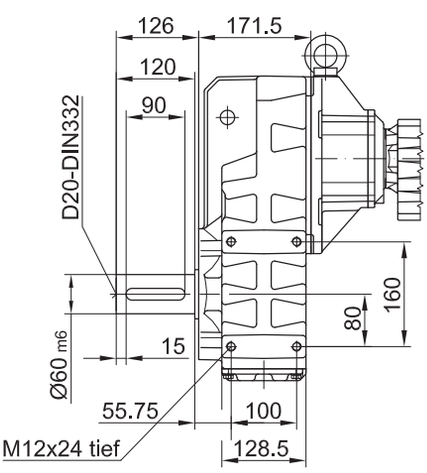

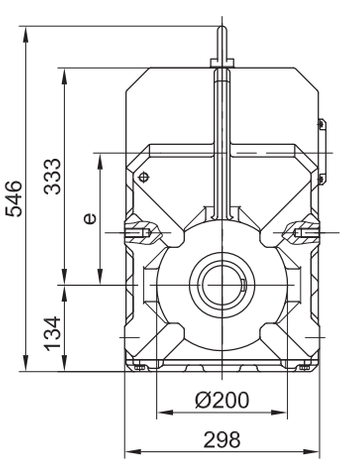

The actual gearbox design can vary from the geometry shown.

BF60G20

mit Drehmomentstütze

Code -0./

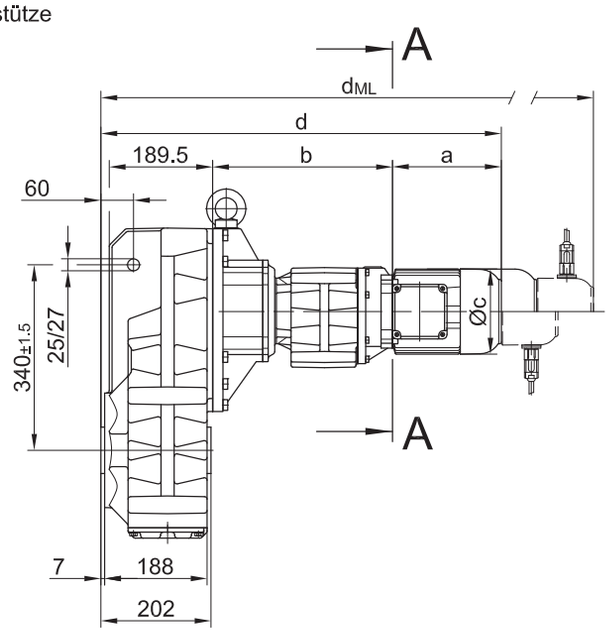

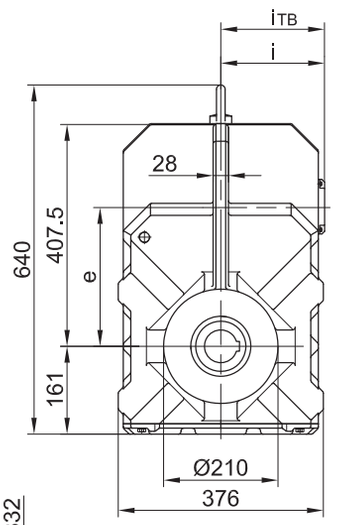

Code -.4/

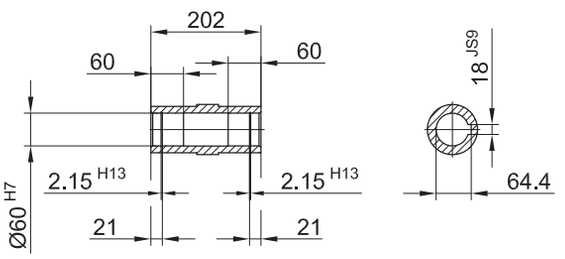

Code -.1/

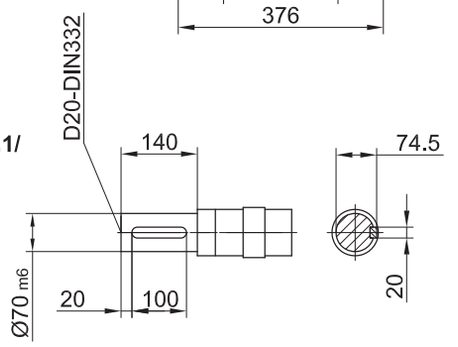

Code -.5/

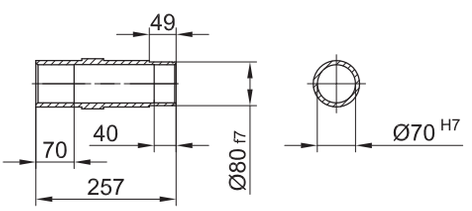

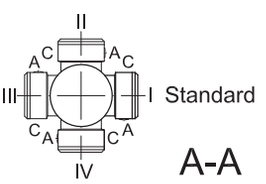

Typ	a	b	c	d	e	i	Ausführung mit Motoranbauten				
							i_{TB}	ES../ZS..	G	ES../ZS..-G	RR/RL
								d_{ML}	d_{ML}	d_{ML}	d_{ML}
BF60G20-../D05..	170	326	123	702	254	100	129.5	743	805	847	-
BF60G20-../D06..	170	326	123	702	254	100	131.5	743	805	847	-
BF60G20-../D07..	190	326	123	722	254	100	131.5	763	825	867	-
BF60G20-../D..08..	200	330	156	735	254	115	149.5	801	842	908	801
BF60G20-../D..09..	251	344.5	181	800	254	124	164	866	907	973	866

The actual gearbox design can vary from the geometry shown.

BF60G20

Flansch mit Gewindelöchern

Code -7./

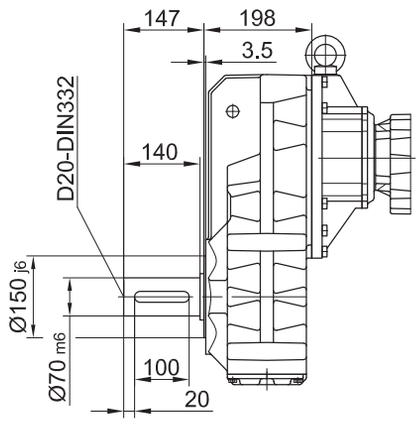

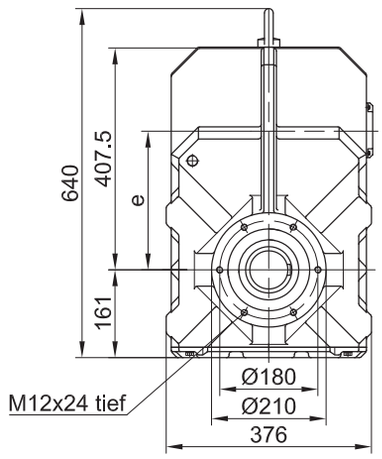

Flansch mit Durchgangslöchern

Code -3./
(Code -2./)

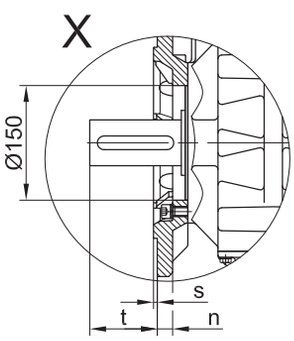

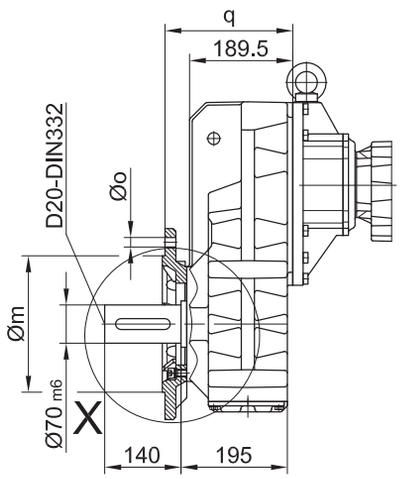

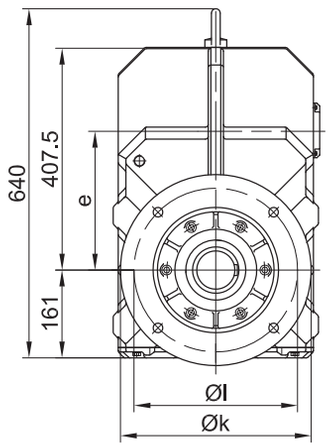

Flanschmasse

BF60G..	k	l	m	n	o	q	s	t
Standard -3./	350	300	250 h6	20	17.5	234.5	5	110.5
klein -2./	300	265	230 j6	20	13.5	242.5	4	102.5

Fuss mit Gewindelöchern links und rechts

Code -6.LR/

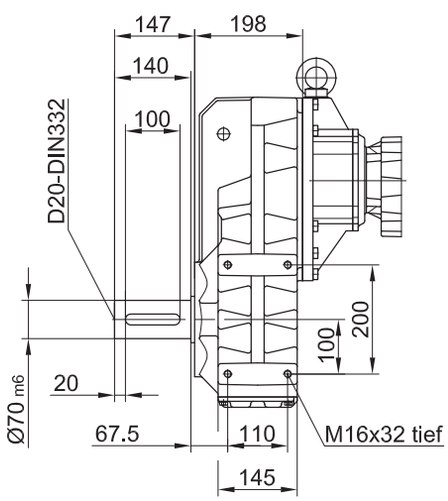

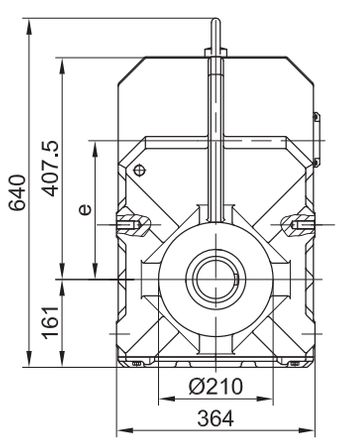

The actual gearbox design can vary from the geometry shown.

BF70G20

mit Drehmomentstütze

Code -0./

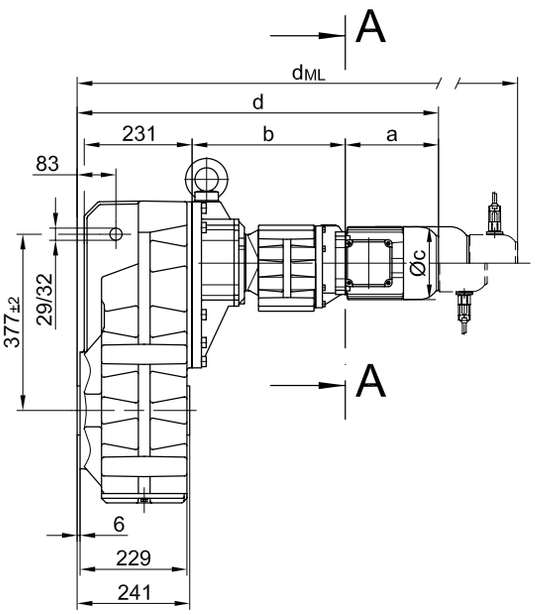

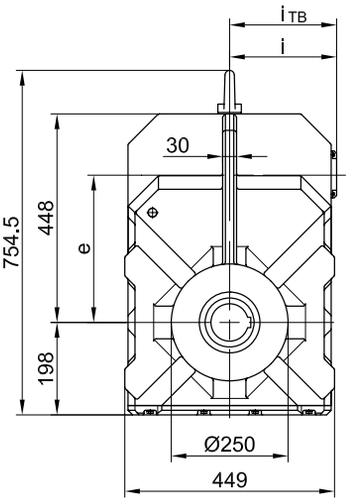

Code -.4/

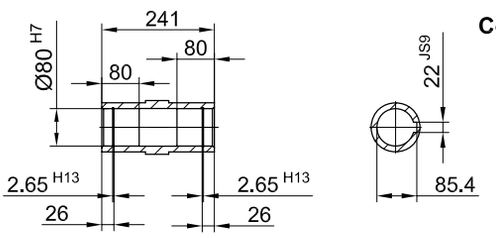

Code -.1/

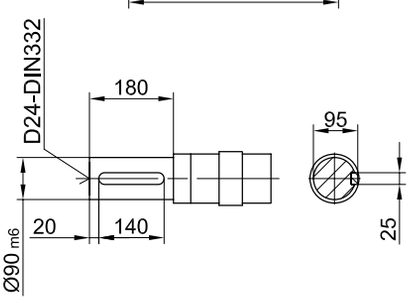

Code -.5/

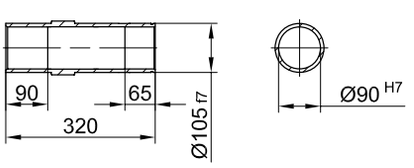

Code -.4/K70

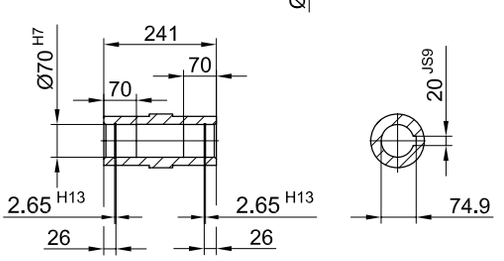

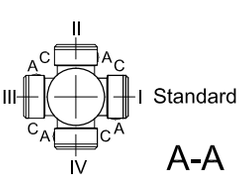

Typ	a	b	c	d	e	i	Ausführung mit Motoranbauten				
							i_{TB}	ES../ZS..	G	ES../ZS..-G	RR/RL
								d_{ML}	d_{ML}	d_{ML}	d_{ML}
BF70G20-../D05..	170	324	123	741	315	100	129.5	782	844	885	-
BF70G20-../D06..	170	324	123	741	315	100	131.5	782	844	885	-
BF70G20-../D07..	190	324	123	761	335	100	131.5	802	864	905	-
BF70G20-../D..08..	200	328	156	775	315	115	149.5	841	882	948	841
BF70G20-../D..09..	251	342.5	181	839	315	124	149.5	926	946	1033	926

The actual gearbox design can vary from the geometry shown.

BF70G20

Flansch mit Gewindelöchern

Code -7./

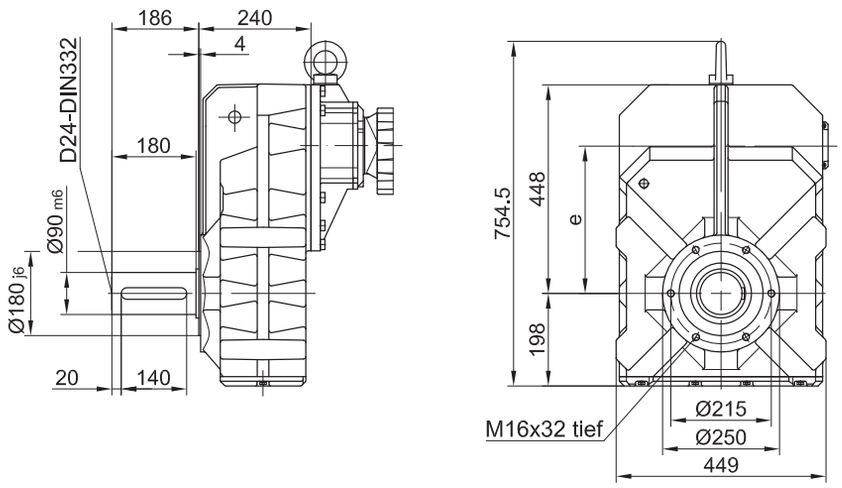

Flansch mit Durchgangslöchern

Code -3./
(Code -2./)
(Code -4./)

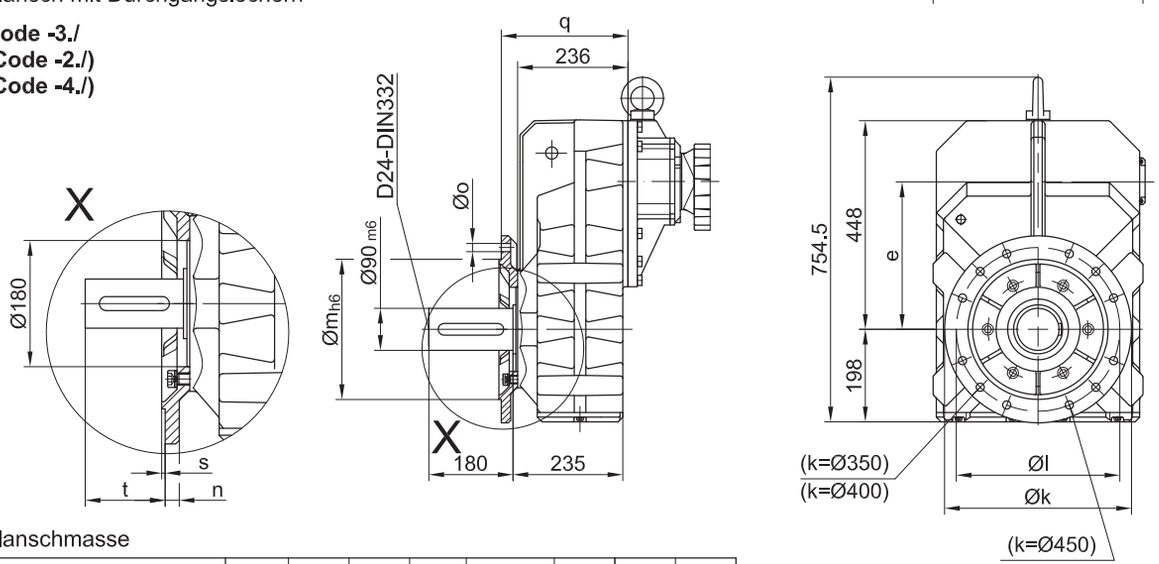

Flanschmasse

BF70G..	k	l	m	n	o	q	s	t
Standard -3./	400	350	300	20	4x17.5	271	5	155
klein -2./	350	300	250	20	4x17.5	271	5	155
gross -4./	450	400	350	22	8x17.5	281	5	145

Fuss mit Gewindelöchern links und rechts

Code -6.LR/

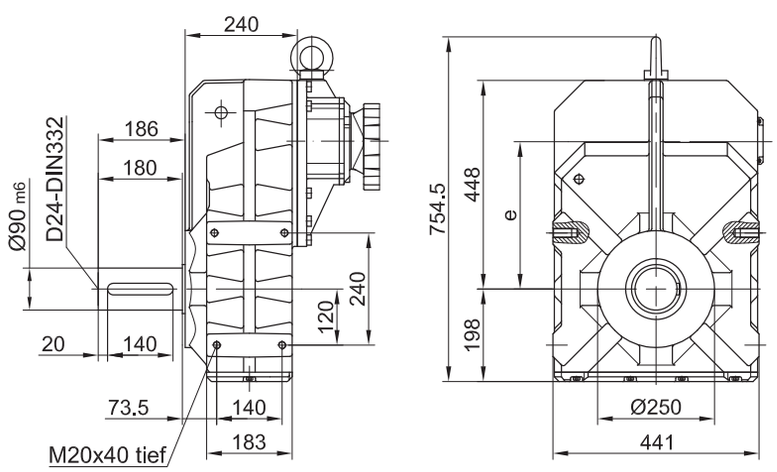

The actual gearbox design can vary from the geometry shown.

BF80G40

mit Drehmomentstütze

Code -0./

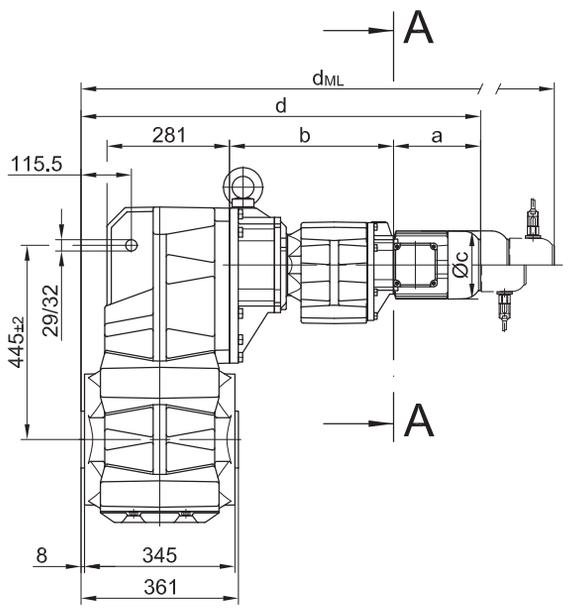

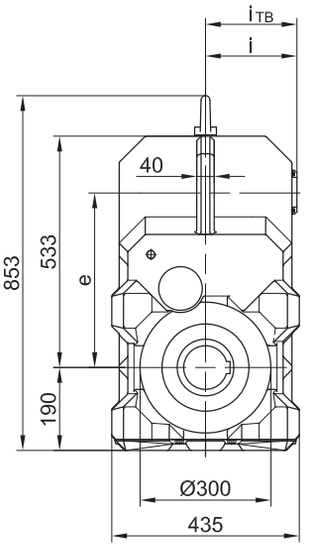

Code -.4/

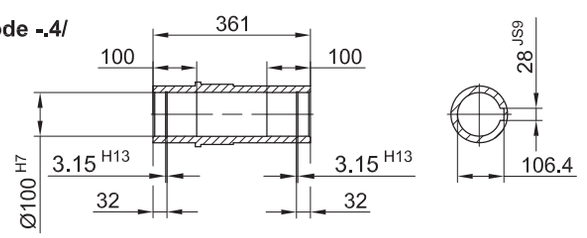

Code -.1/

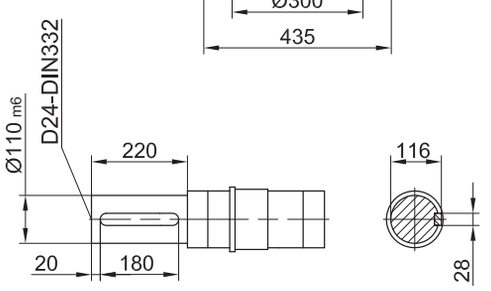

Code -.5/

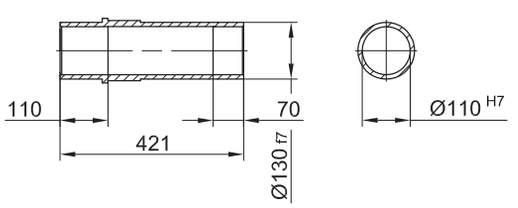

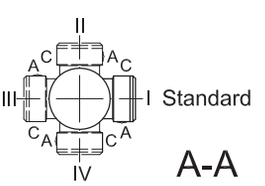

Typ	a	b	c	d	e	i	Ausführung mit Motoranbauten				
							i_{TB}	ES../ZS..	G	ES../ZS..-G	RR/RL
								d_{ML}	d_{ML}	d_{ML}	d_{ML}
BF80G40-../D..08..	200	376	156	916	400	115	149.5	982	1023	1089	982
BF80G40-../D..09..	251	390.5	181	982	400	124	164	1069	1089	1176	1069
BF80G40-../D..11..	319	397	228	1057	400	181	181	1153	1164	1260	1153

The actual gearbox design can vary from the geometry shown.

BF80G40

Flansch mit Gewindelöchern

Code -7./

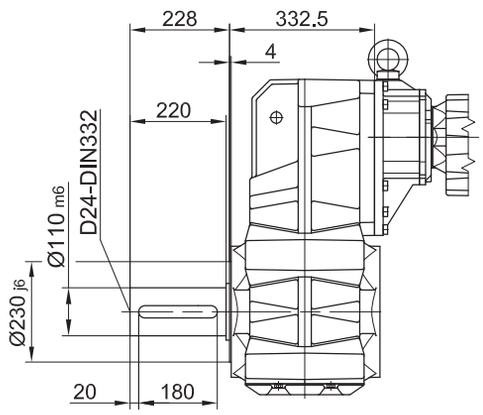

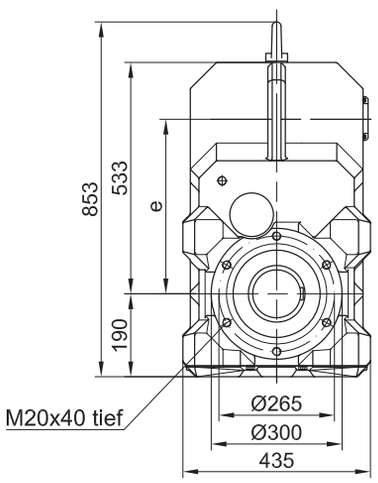

Flansch mit Durchgangslöchern

Code -3./
(Code -4./)

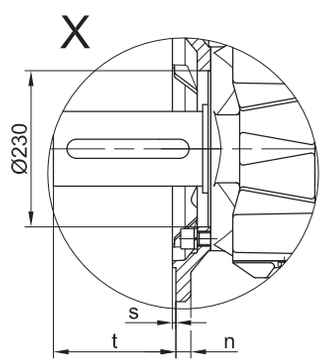

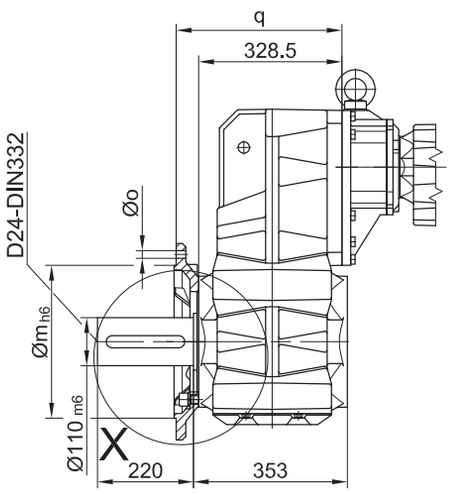

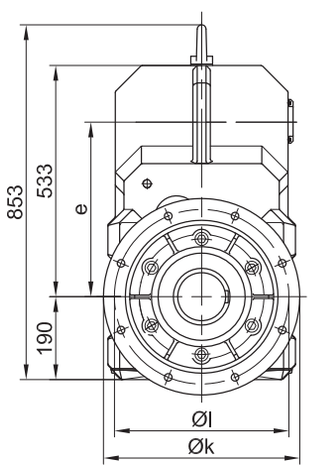

Flanschmasse

BF80G..	k	l	m	n	o	q	s	t
Standard -3./	450	400	350	22	17.5	383.5	5	177
gross -4./	550	500	450	22	17.5	388.5	5	172

Fuss mit Durchgangslöchern links und rechts

Code -1.LR/

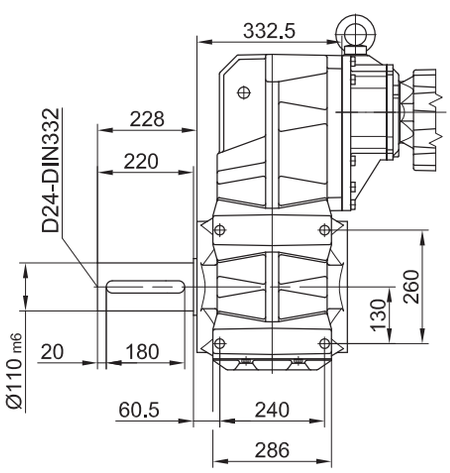

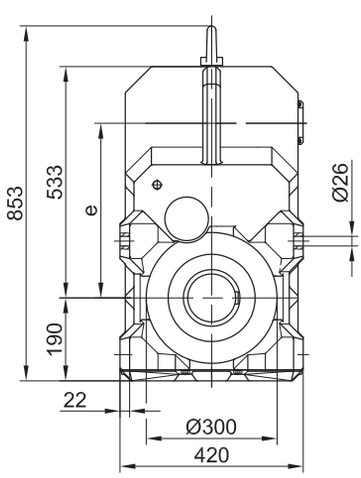

The actual gearbox design can vary from the geometry shown.

BF90G50

mit Drehmomentstütze

Code -0./

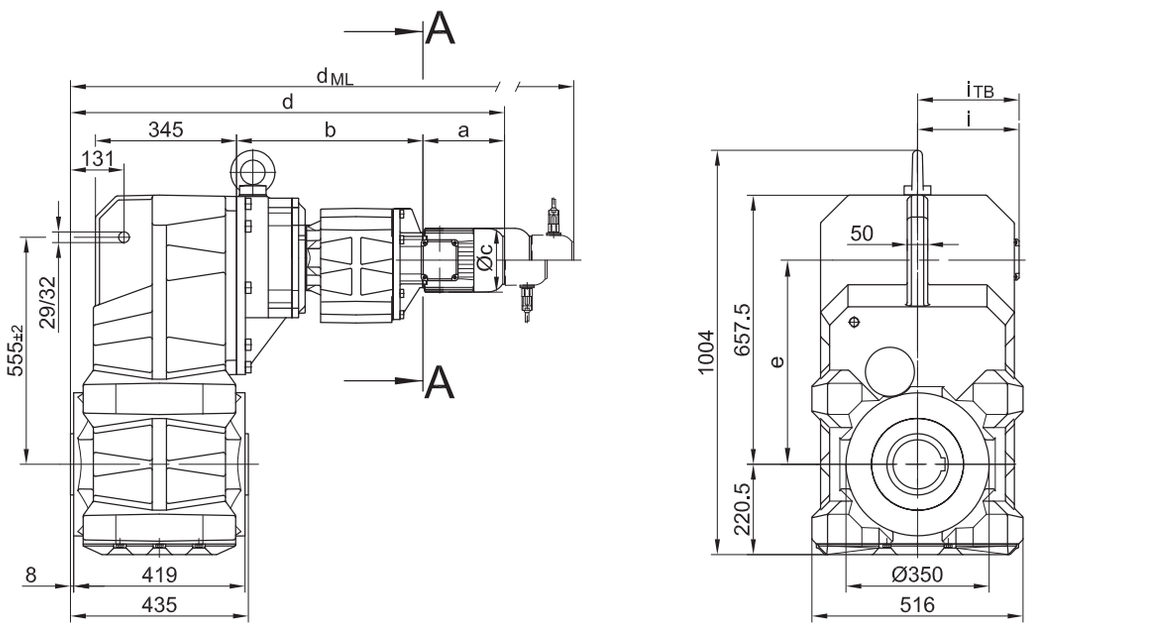

Code -.4/

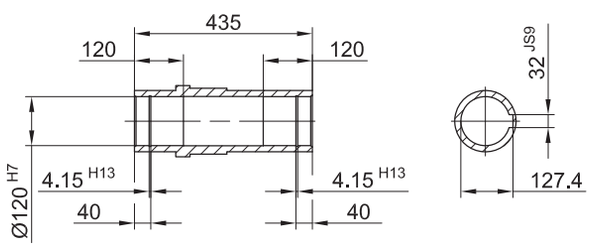

Code -.1/

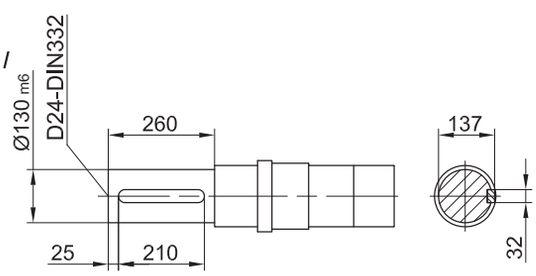

Code -.5/

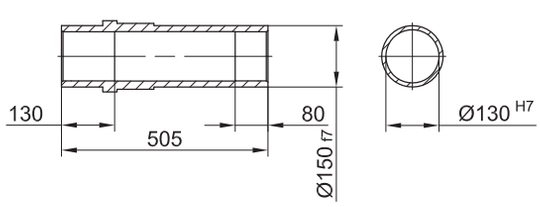

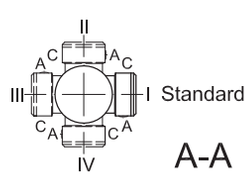

Typ	a	b	c	d	e	i	Ausführung mit Motoranbauten				
							i_{TB}	ES../ZS..	G	ES../ZS..-G	RR/RL
								d_{ML}	d_{ML}	d_{ML}	d_{ML}
BF90G50-../D..08..	200	456	156	1062	503	136	149.5	1128	1169	1235	1128
BF90G50-../D..09..	251	470.5	181	1127	499	164	164	1214	1234	1321	1214
BF90G50-../D..11..	319	477	228	1202	499	181	181	1298	1309	1405	1298
BF90G50-../D..13..	393	490	266	1289	499	217	217	1406	1396	1513	1406
BF90G50-../D..16..	429	504	322	1339	499	243	243	1483	1446	1590	1483

The actual gearbox design can vary from the geometry shown.

BF90G50

Flansch mit Gewindelöchern

Code -7./

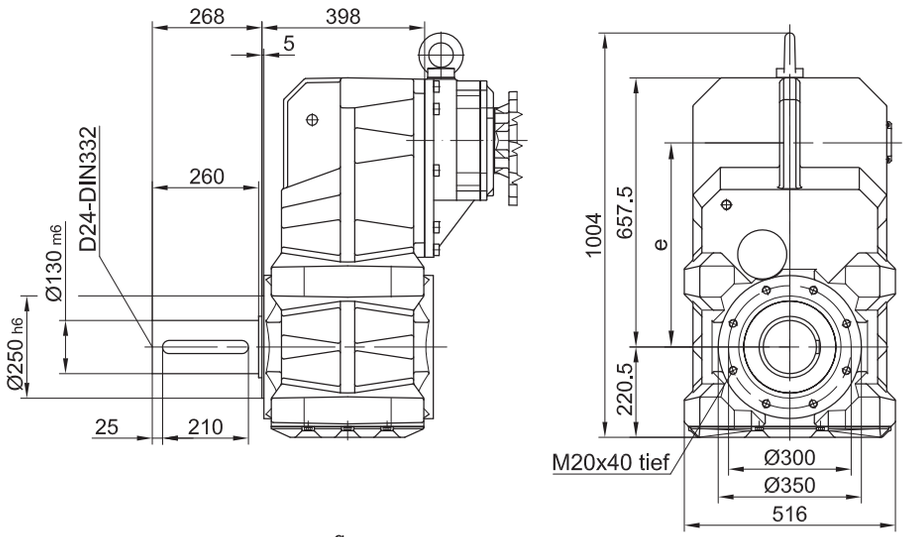

Flansch mit Durchgangslöchern

Code -3./
(Code -4./)

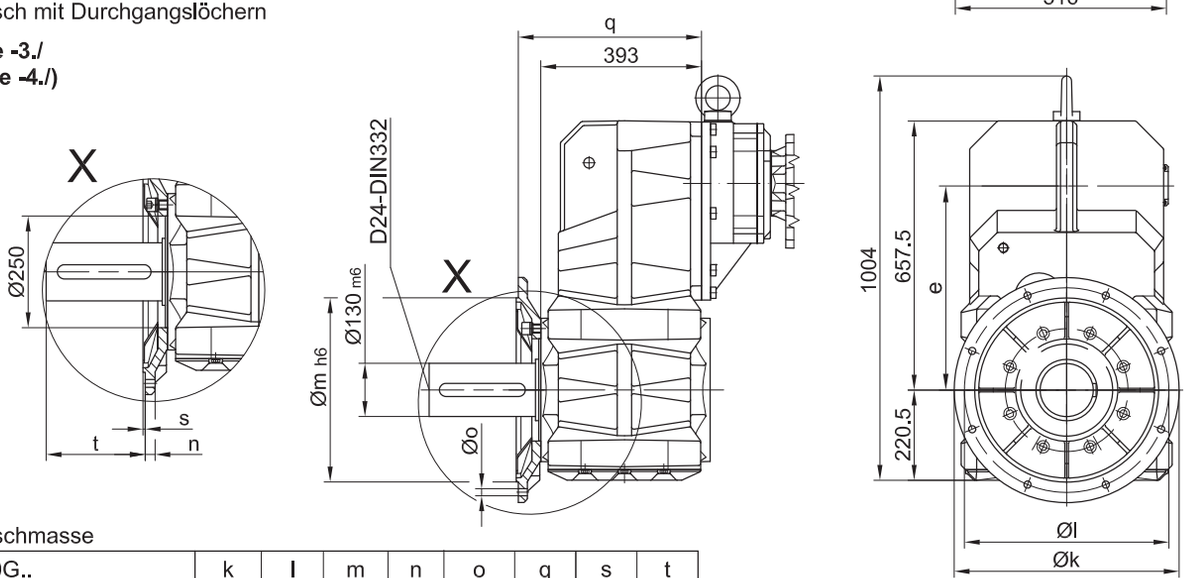

Flanschmasse

BF90G..	k	l	m	n	o	q	s	t
Standard -3./	550	500	450	22	17.5	448	5	218
gross -4./	660	600	550	25	22	442	6	224

Fuss mit Durchgangslöchern links und rechts

Code -1.LR/

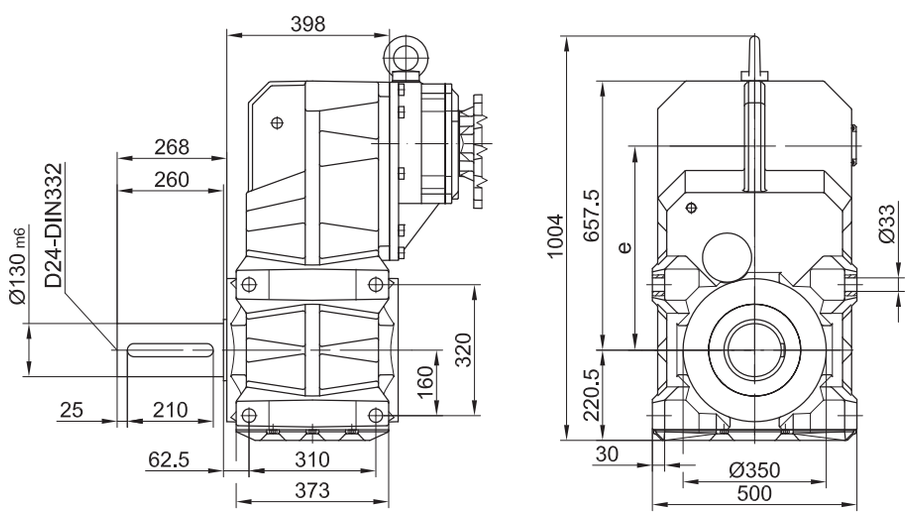

The actual gearbox design can vary from the geometry shown.

Shrink disc coupling (SSV)

(Code BF10-.5/...)
(Code BF10Z-.5/...)

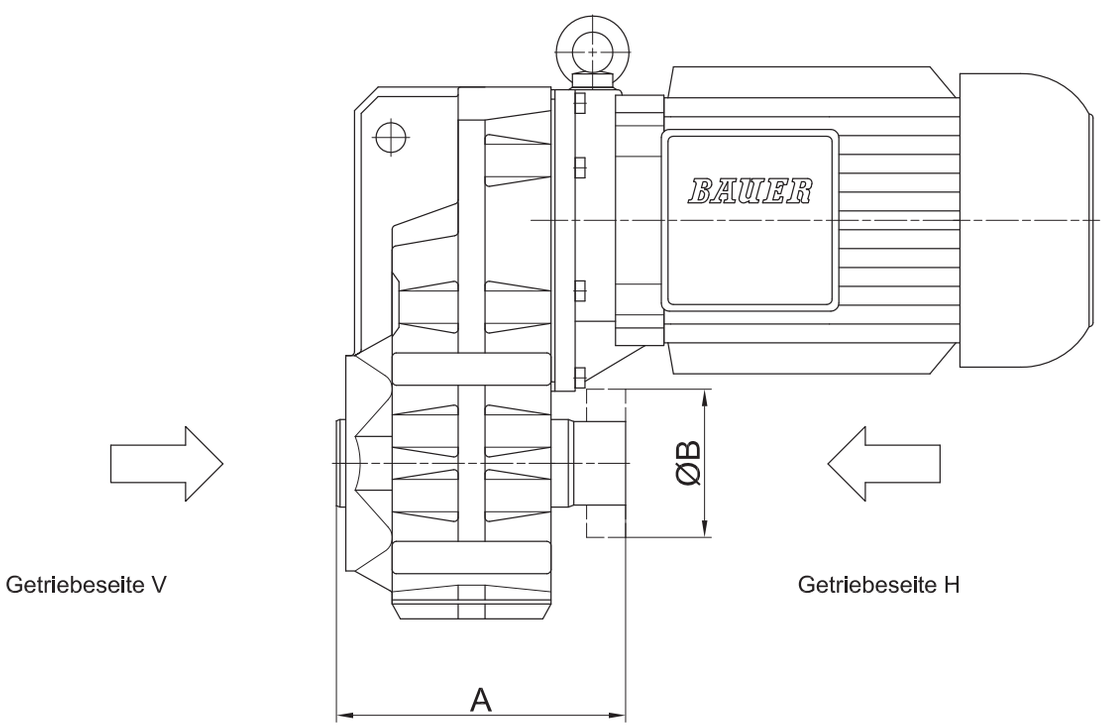

Typ	SSV Ringfeder	SSV STÜWE	A	B
BF10	RfN 4161 036x072	HSD 36-22x36	153	72
BF20	RfN 4161 044x080	HSD 44-22x44	173	80
BF30	RfN 4161 050x090	HSD 50-22x50	192	90
BF40	RfN 4161 062x110	HSD 62-22x62	215	110
BF50	RfN 4161 068x115	HSD 68-22x68	211	115
BF60	RfN 4161 080x141	HSD 80-22x80	257	140
BF70	RfN 4161 105x185	HSD 110-22x105	320	185
BF80	RfN 4161 130x215	HSD 125-22x130	421	215
BF90	RfN 4161 150x263	HSD 155-22x150	505	263

Shrink disc coupling with (SSV) cover

(Code BF10-.5A/...)
(Code BF10Z-.5A/...)

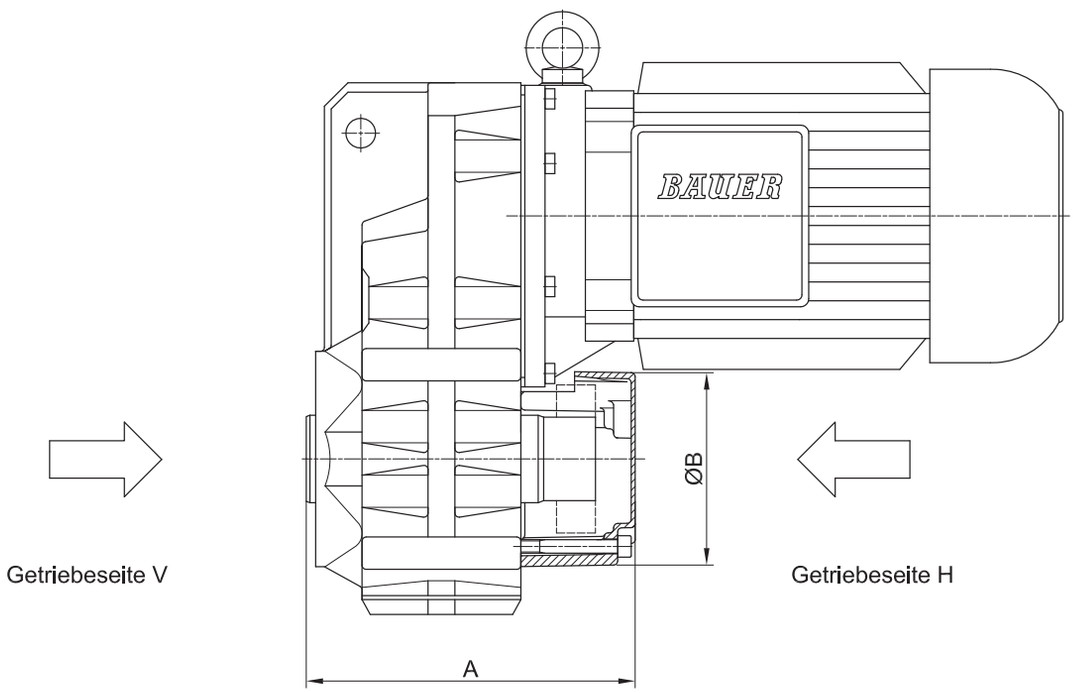

Typ	SSV Ringfeder	SSV STÜWE	A	B
BF10	RfN 4161 036x072	HSD 36-22x36	174	120
BF20	RfN 4161 044x080	HSD 44-22x44	211	140
BF30	RfN 4161 050x090	HSD 50-22x50	223	140
BF40	RfN 4161 062x110	HSD 62-22x62	245	160
BF50	RfN 4161 068x115	HSD 68-22x68	227	200
BF60	RfN 4161 080x141	HSD 80-22x80	290	210
BF70	RfN 4161 105x185	HSD 110-22x105	359	250
BF80	RfN 4161 130x215	HSD 125-22x130	463	300
BF90	RfN 4161 150x263	HSD 155-22x150	557	350

Screw Holes Side (H)

→ Sealing Cover

BF10 bis BF70

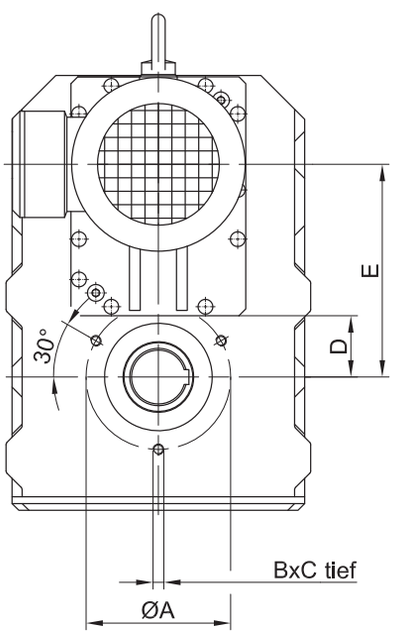

BF80 BF90

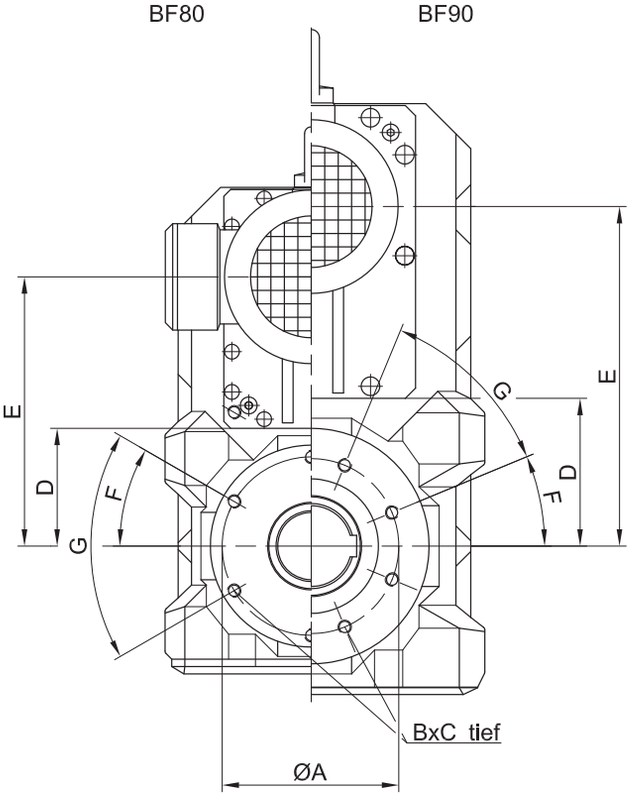

Getriebe	Maße (mm)						
	A	B	C	D	E	F	G
BF10	100	M8	16	35	118	-	-
BF20	115	M10	20	39	136	-	-
BF30	115	M10	20	44	157	-	-
BF40	130	M10	20	52	180.5	-	-
BF50	165	M12	24	60	207	-	-
BF60	180	M12	24	69	255.5	-	-
BF70	215	M16	32	89	316	-	-
BF80	265	M20	40	173	400	30°	6x60°
BF90	300	M20	40	219	504.5	22.5°	8x45°

Rubber buffer for torque restraint

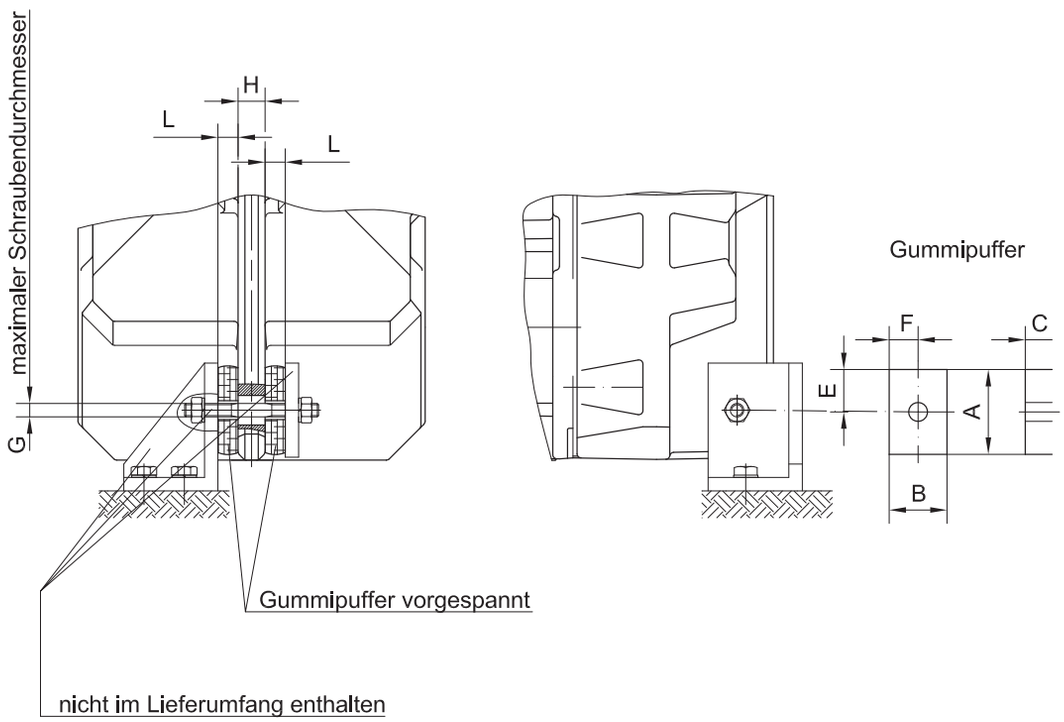

Werkstoff: Naturkautschuk
Härte 50 ±5 Shore A

Abmessungen des Querlochs:
Siehe Maßbild des jeweiligen Getriebes

Getriebe	Pos.	Masse (mm)								
		A	B	C	D	E	F	G	H	L
BF06	Pos.0	30	30	12	12	15	15	M10	10	10
BF10	Pos.1	48	32	15	14	24	16	M10	16	13.5
BF20	Pos.1	48	32	15	14	24	16	M10	18	13
BF30	Pos.2	63	43	20	14	31.5	21.5	M10	18	17
BF40	Pos.2	63	43	20	14	31.5	21.5	M10	20	16.5
BF50	Pos.3	88	60	25	22	44	30	M18	24	21.5
BF60	Pos.3	88	60	25	22	44	30	M18	28	21
BF70	Pos.4	123	88	30	26	61.5	44	M20	30	25.5
BF80	Pos.5	133	103	35	26	66.5	51.5	M20	40	30
BF90	Pos.5	133	103	35	26	66.5	51.5	M20	50	29.5

Tools for hollow shaft and keyway

Pos.1 Wellenzapfen

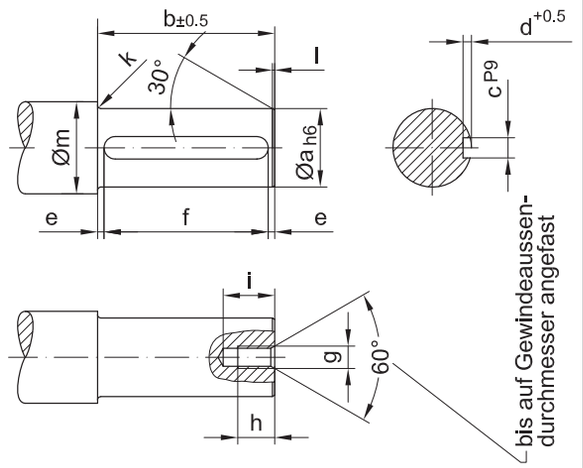

✳ Pos.2 Scheibe

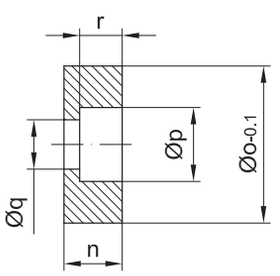

$\sqrt{^{x}}$, Kanten gebrochen
Werkstoff:
C45 DIN 17200

Typ	Masse (мм)																
	Pos.1 Wellenzapfen												Pos.2 Scheibe				
	a	b	c	d	e	f	g	h	i	k	l	m	n	o	p	q	r
BF06	25	70	8	4	3.5	$63^{+0.5}$	M8	18	24	2	1.5	33	13.5	24.8	15	9	8.5
BF10	25	102	8	4	6	$90^{+0.5}$	M8	18	24	2.5	1.5	33	13.5	24.8	15	9	8.5
BF20	30	108	8	4	9	$90^{+0.5}$	M10	20	26	3	1.5	38	15	29.8	18	11	10
BF30	35	118	10	5	9	$100^{+0.5}$	M10	20	26	3	1.5	43	16	34.8	18	11	10
BF40	40	141	12	5	8	$125^{+0.5}$	M12	22	29	3	2	48	18	39.8	20	13.5	12
BF50	50	148	14	5.5	11.5	$125^{+0.5}$	M16	30	37	3.5	2	58	21	49.8	26	17.5	15
BF60	60	173	18	7	6.5	$160^{+0.5}$	M20	38	46	3.5	2	68	24	59.8	33	22	18
BF70	80	205	22	9	12.5	$180^{+0.5}$	M20	38	46	4	2	90	27	79.8	33	22	20
BF70-K70	70	205	20	7.5	12.5	$180^{+0.5}$	M20	38	46	4	2	90	27	69.8	33	22	20
BF80	100	317	28	10	18.5	$280^{+0.5}$	M24	45	54	4	3	110	32	99.8	40	26	25
BF90	120	383	32	11	11.5	$360^{+0.5}$	M24	45	54	4.5	3	130	35	119.8	40	26	28

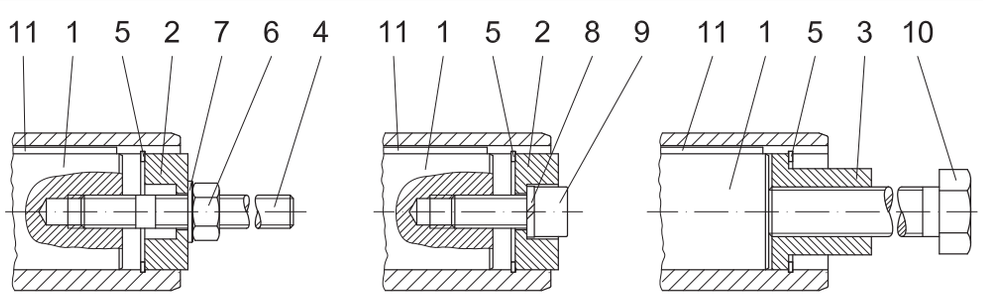

Die dargestellten Teile werden zur Montage benötigt. NUR ✳ gekennzeichneten Teile sind im Montagehilfeset enthalten.

Tools for hollow shaft and keyway

Pos.3 Hülse

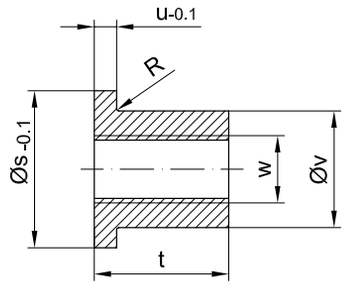

Pos.4 Gewindebolzen

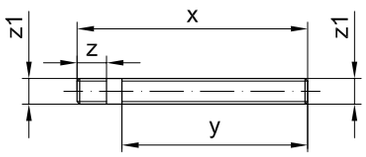

Werkstoff: Stahl, Zugfestigkeit ≥ 1000N/mm²
Gewinde gerollt

$\sqrt{^{x}}$, Kanten gebrochen
Werkstoff: C45 DIN 17200

Typ	Masse (mm)										Sicherungsring DIN 472 ✳	Sechskantmutter DIN 934-8	Scheibe DIN 125-St	Federring DIN 7980	Zylinderschraube DIN 912-8.8 ✳	Sechskantschraube DIN EN 24017-8.8	Passfeder DIN 6885 Breite x Höhe x Länge
	Pos.3 Hülse						Pos.4 Gewindebolzen										
	s	t	u	v	w	R	x	y	z	z1	Pos.5	Pos.6	Pos.7	Pos.8	Pos.9	Pos.10	Pos.11
BK06	19.8	20	5	11.1	M8	0.8	130	100	20	M6	20x1	M6	6.4	6	M6x30	M6x120	A 6x6x63
BK10	24.8	24	5	15.4	M12	0.8	200	170	20	M8	25x1.2	M8	8.4	8	M8x30	M12x190	A 8x7x125
BK20	29.8	28	5	19.8	M14	0.8	230	195	23	M10	30x1.2	M10	10.5	10	M10x30	M14x210	A 8x7x140
BK30	34.8	28	5	23	M14	-	260	220	23	M10	35x1.5	M10	10.5	10	M10x35	M14x240	A 10x8x180
BK40	39.8	40	6	27.7	M20	0.8	300	260	28	M12	40x1.75	M12	13	12	M12x35	M20x290	A 12x8x200
BK50	49.8	48	6	36	M24	-	340	290	37	M16	50x2.0	M16	17	16	M16x40	M24x320	A 14x9x220
BK60	59.8	60	6	44	M30	-	370	310	45	M20	60x2.0	M20	21	20	M20x50	M30x350	A 18x11x250
BK70	79.8	60	8	55	M30	-	420	360	45	M20	80x2.5	M20	21	20	M20x50	M30x400	A 22x14x280
BK70-K70	69.8	60	8	53	M30	-	420	360	45	M20	70x2.5	M20	21	20	M20x50	M30x400	A 20x12x280
BK80	99.8	72	10	75	M36	-	480	410	55	M24	100x3.0	M24	25	24	M24x60	M36x450	A 28x16x320
BK90	119.8	72	10	80	M36	-	560	480	55	M24	120x4.0	M24	25	24	M24x60	M36x520	A 32x18x400

Die dargestellten Teile werden zur Montage benötigt. NUR ✳ gekennzeichneten Teile sind im Montagehilfeset enthalten.

Optional:

Typ	Ø s	Bestelltext
BK06	20	Id.Nr.4104013 Montagehilfe "halten"
BK10	25	Id.Nr.4103921 Montagehilfe "halten"
BK20	30	Id.Nr.4103939 Montagehilfe "halten"
BK30	35	Id.Nr.4103947 Montagehilfe "halten"
BK40	40	Id.Nr.4103955 Montagehilfe "halten"
BK50	50	Id.Nr.4103963 Montagehilfe "halten"
BK60	60	Id.Nr.4103971 Montagehilfe "halten"
BK70	80	Id.Nr.4103980 Montagehilfe "halten"
BK70-K70	70	Id.Nr.4104765 Montagehilfe "halten"
BK80	100	Id.Nr.4103998 Montagehilfe "halten"
BK90	120	Id.Nr.4104005 Montagehilfe "halten"

Sealing Cap (VK)

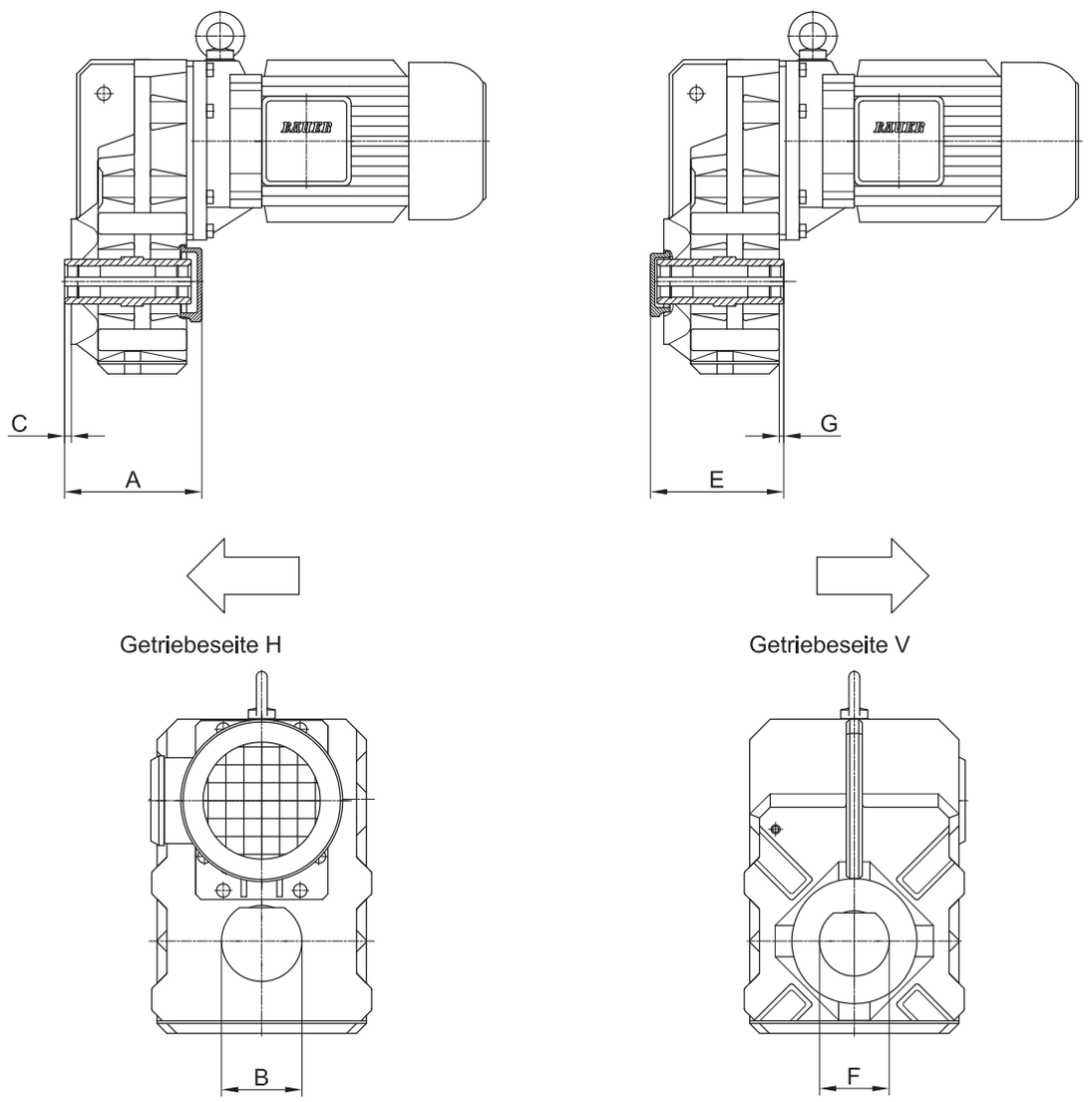

Verschlusskappe HINTEN			
Typ	A	B	C
BF10	134	78	5
BF20	142	85	5
BF30	153.5	90	7.5
BF40	179.5	110	7
BF50	192	125	6
BF60	222	140	7
BF70	258	170	6

Verschlusskappe VORNE			
Typ	E	F	G
BF30	149	78	7.5
BF50	189.5	110	6
BF70	262	130	6

Sealing Cover (VD)

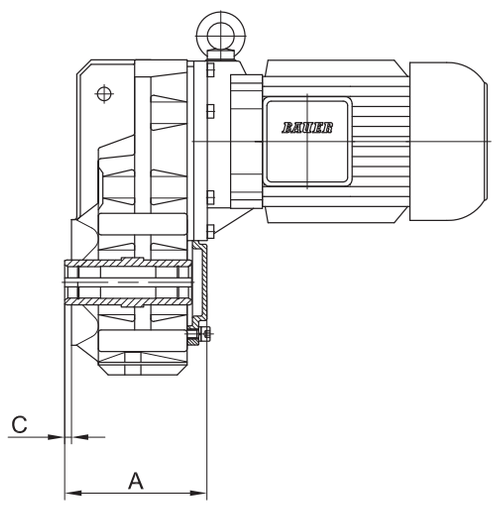

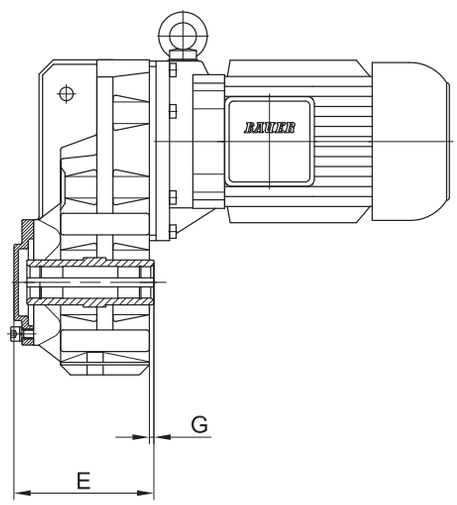

Getriebeseite HINTEN (H)

Getriebeseite VORNE (V)

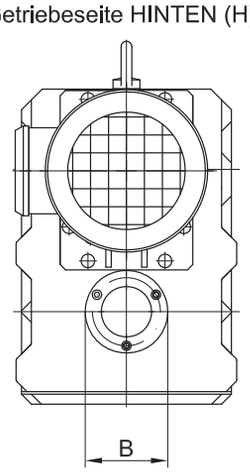

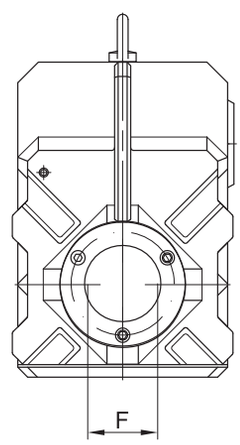

Verschlussdeckel HINTEN			
Typ	A	B	C
BF10	135.5	120	5
BF20	144	139.5	5
BF30	153	139.5	7.5
BF40	179.5	160	7
BF50	191.5	199	6
BF60	221.5	210	7
BF70	258	250	6
BF80	376	300	8
BF90	442	350	8

Verschlussdeckel VORNE			
Typ	E	F	G
BF80	376	300	8
BF90	442	350	8

12

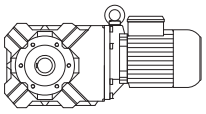

	Page
Dimensional drawings bevel-geared motors	**501-550**
- Standard	**502-521**
- Tanden Gearbox	**522-539**

Additional Dimension Sheet

- Additional Dimension Sheet
- Shrink Disk Connection with Cover (SSV)
- Rubber buffer for torque restraint
- Posittion of the torque arm
- Foot with tapped bores
- Foot plate with through bores
- Assembly Tools for Hollow Shaft
- Sealing Cap (VK)
- Sealing Cover (VD)

BK06

Flansch mit Durchgangslöchern vorne

Code -3.V/

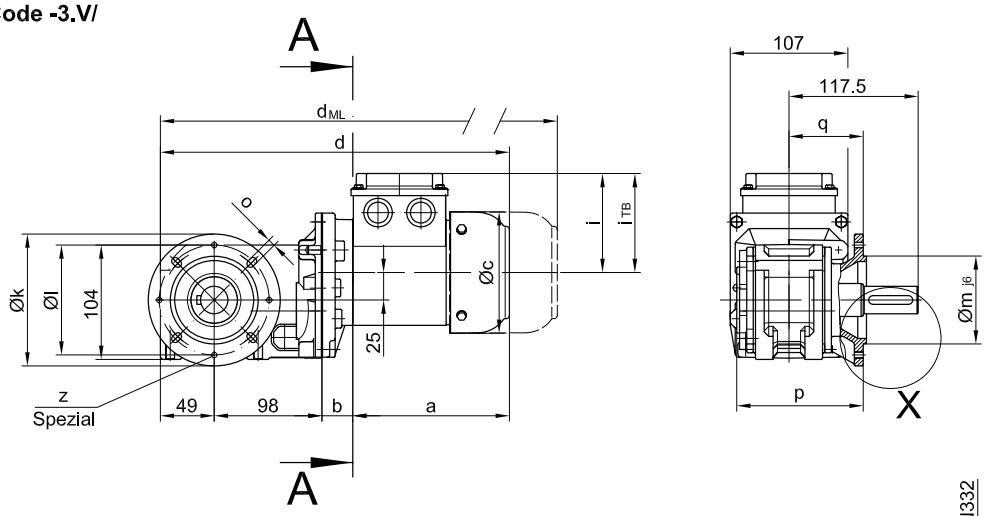

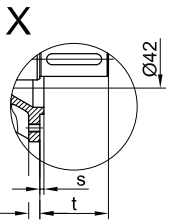

Code -.1/

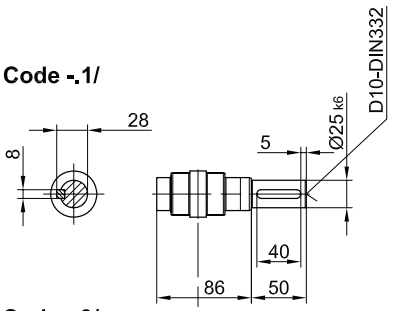

Code -.4/

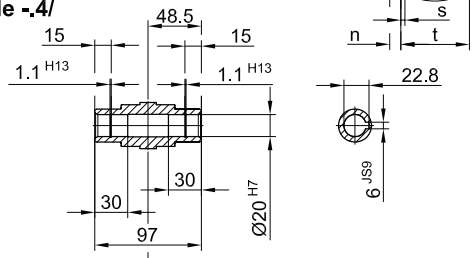

Code -.3/

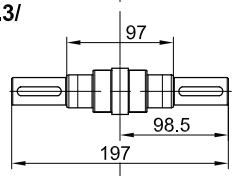

Code -.5/

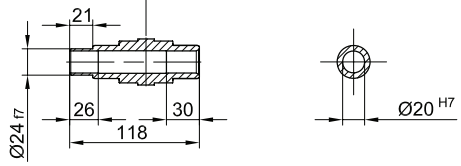

Code -.7/

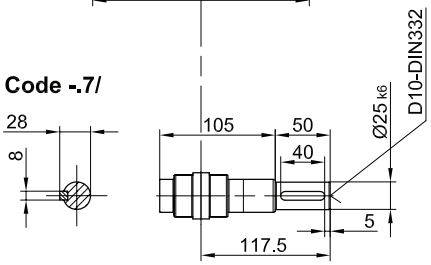

Flanschmasse

BK06	k	l	m	n	o	p	q	s	t	z
Standard -37V/	120	100	80	8	6.6	115	67.5	3	50	-
Spezial -37V/	120	100	80	8	6.6	115	67.5	3	50	4xM6

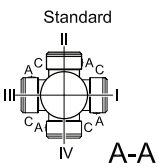

Typ	a	b	c	d	i	i_{TB}	Ausführung mit Motoranbauten			
							EZ../ZS..	G	EZ../ZS..-G	RR/RL
							d_{ML}	d_{ML}	d_{ML}	d_{ML}
BK06-../D04..	143	28	111	318	90	124.5	361.5	380.5	424	-
BK06-../D05..	170	30	123	348	100	129.5	389	451	492	-
BK06-../D06..	170	30	123	348	100	131.5	389	451	492	-
BK06-../D07..	190	30	123	368	100	131.5	409	471	512	-
BK06-../D..08..	200	74	156	421	115	149.5	487	528	594	487

The actual gearbox design can vary from the geometry shown.

BK06

Drehmomentstütze vorne
Code -5.V/

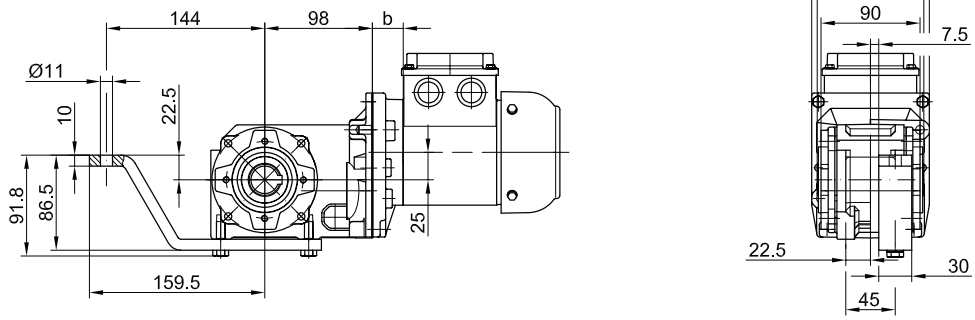

Flansch mit Gewindelöchern vorne
Code -7.V/

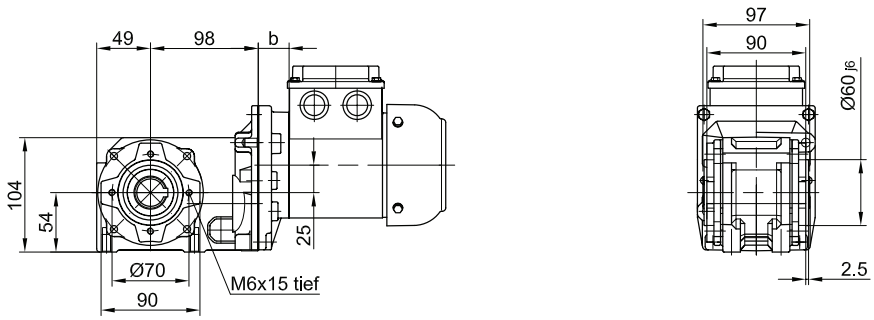

Fuss mit Gewindelöchern unten
Code -6.U/

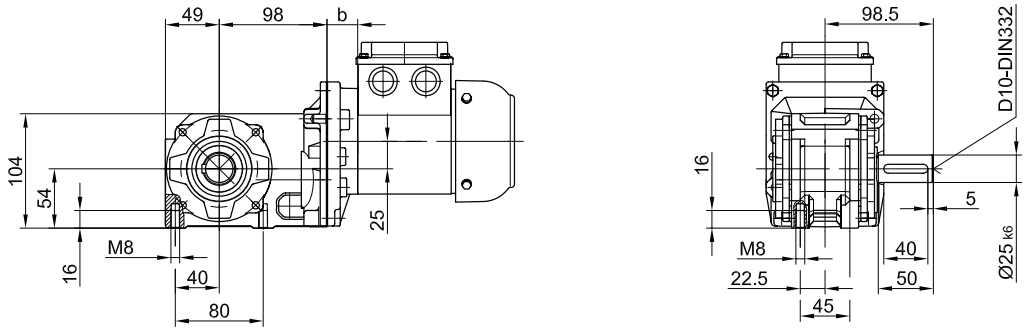

Fuss mit Durchgangslöchern unten
Code -1.U/

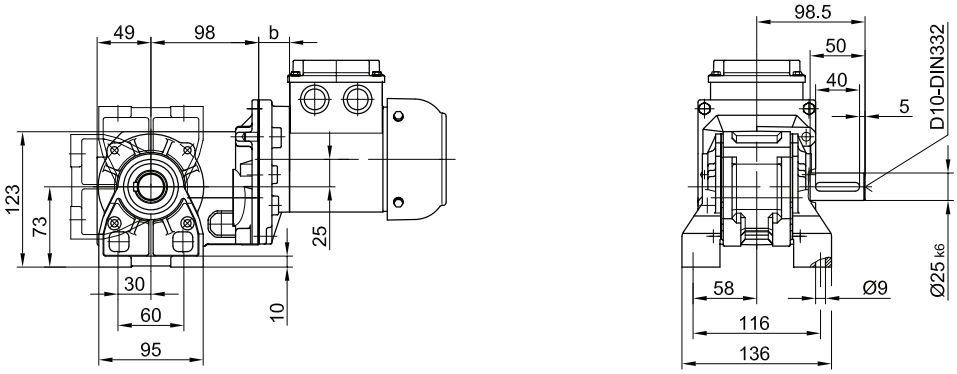

The actual gearbox design can vary from the geometry shown.

BK10 - BK10Z

Flansch mit Durchgangslöchern vorne

Code -3.V/
(Code -2.V/)

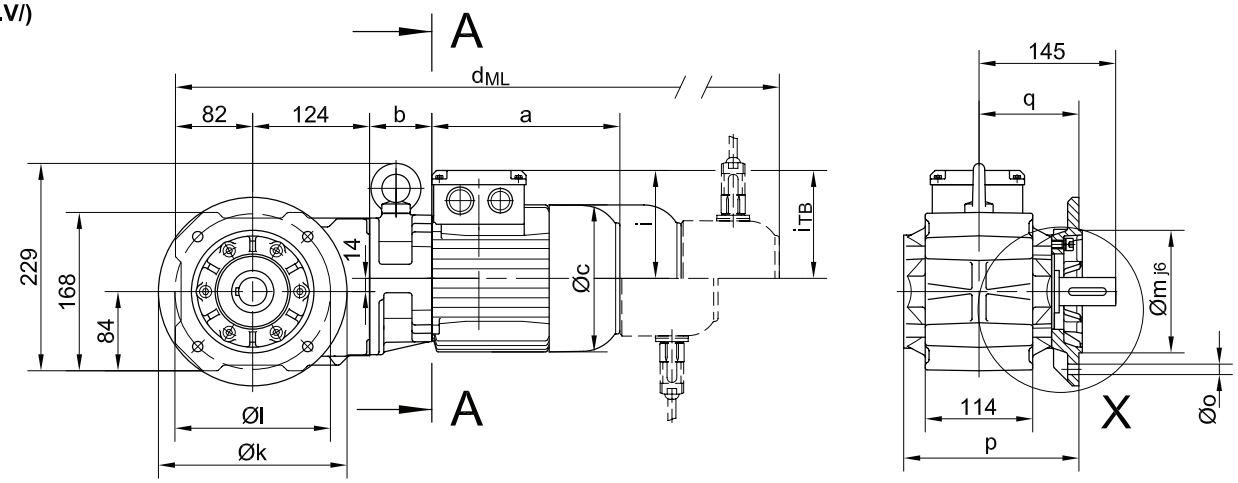

Code -.4/

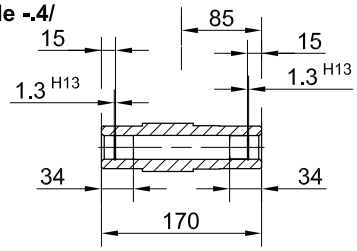

Code -.5/

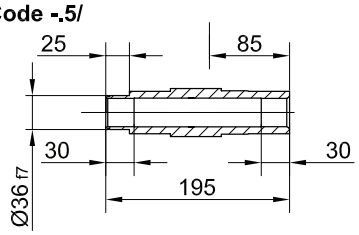

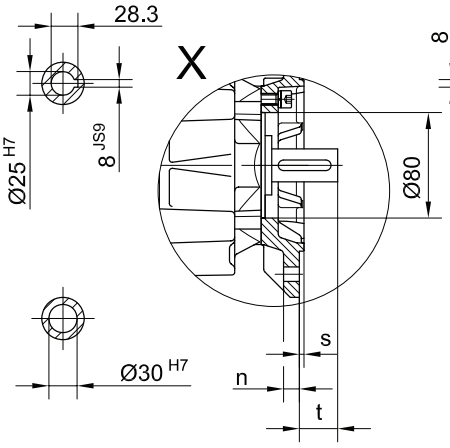

Code -.1/

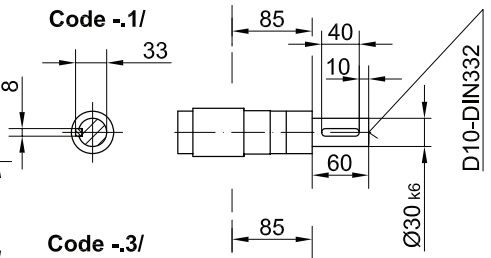

Code -.3/

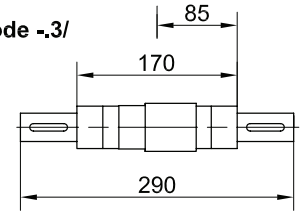

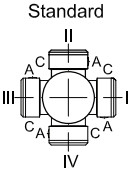

Flanschmasse

BK10(Z)	k	l	m	n	o	p	q	s	t
Standard -3.V/	200	165	130	12	11	186.5	106	3.5	39
klein -2.V/	160	130	110	10	9	179.5	99	3.5	46

Typ	a	b	c	d	i	Ausführung mit Motoranbauten				
						i_{TB}	EZ../ZS..	G	EZ../ZS..-G	RR/RL
							d_{ML}	d_{ML}	d_{ML}	d_{ML}
BK10Z-../D04..	143	86	111	435	90	124.5	478.5	497.5	541	-
BK10-../D05..	170	62	123	439	100	129.5	480	542	583	-
BK10Z-../D05..	170	88	123	465	100	129.5	506	568	609	-
BK10-../D06..	170	62	123	439	100	131.5	480	542	583	-
BK10Z-../D06..	170	88	123	465	100	131.5	506	568	609	-
BK10-../D07..	190	62	123	459	100	131.5	500	562	603	-
BK10Z-../D07..	190	88	123	485	100	131.5	526	588	629	-
BK10-../D..08..	200	66	156	472	115	149.5	538	579	645	538
BK10Z-../D..08..	200	132	156	538	115	149.5	604	645	711	604
BK10-../D..09..	251	80.5	181	537	124	164	624	644	731	624

The actual gearbox design can vary from the geometry shown.

BK10 - BK10Z

Drehmomentstütze vorne

Code -5.V/

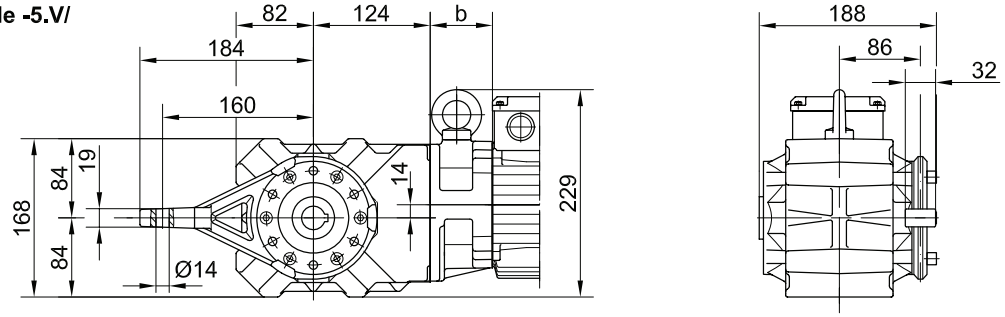

Flansch mit Gewindelöchern vorne

Code -7.V/

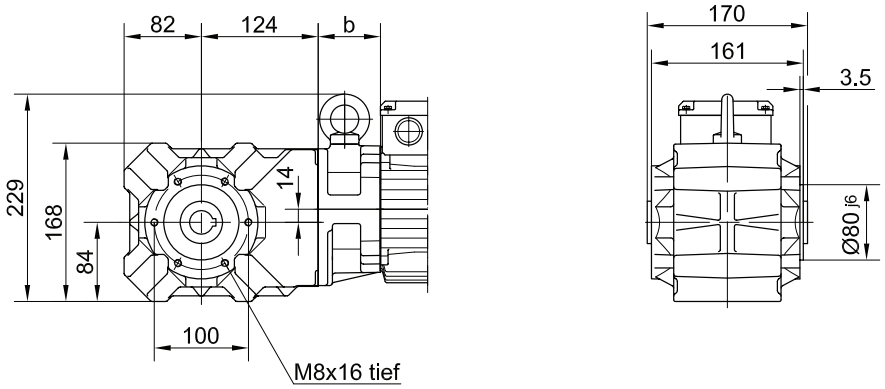

Fuss mit Gewindelöchern unten

Code -6.U/

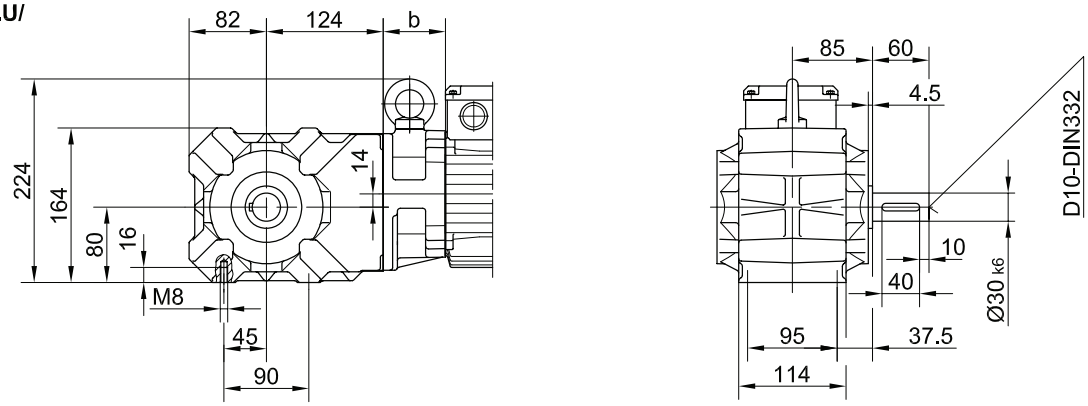

Fuss mit Durchgangslöchern unten

Code -1.U/

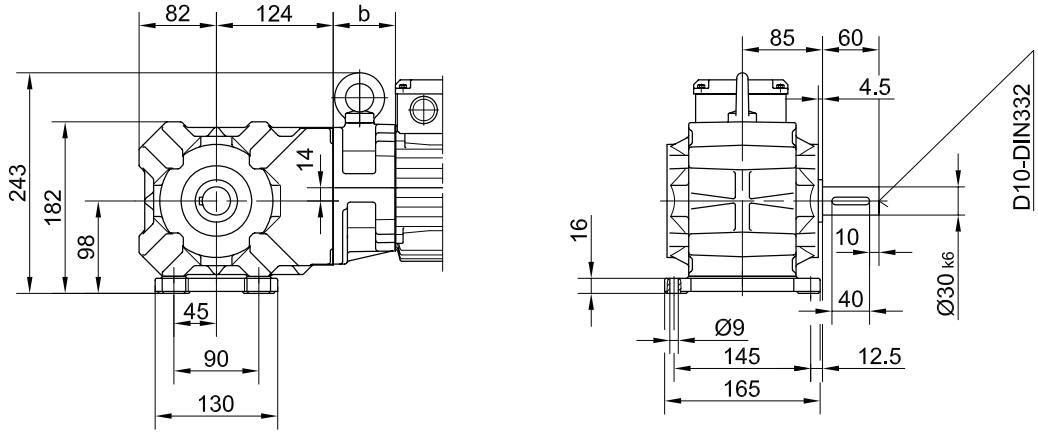

The actual gearbox design can vary from the geometry shown.

BK20 - BK20Z

Flansch mit Durchgangslöchern vorne

Code -3.V/
(Code -2.V/)

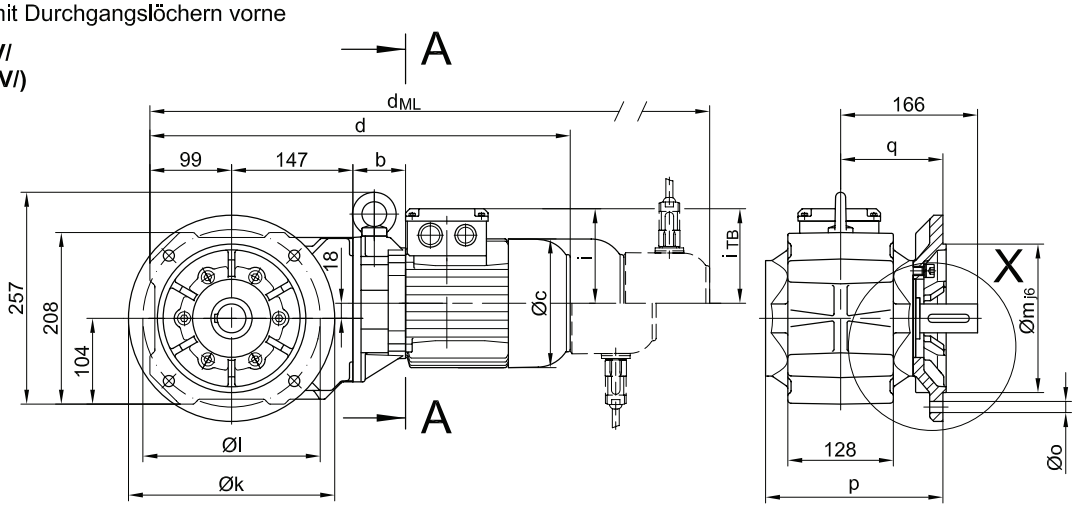

Code -.4/

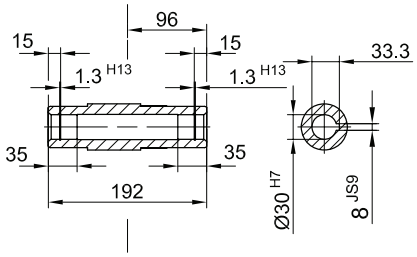

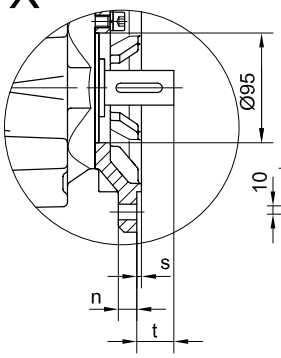

Code -.1/

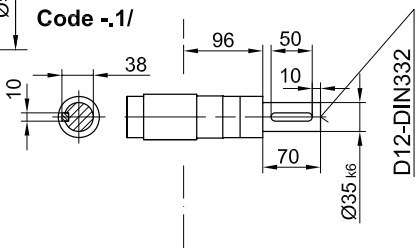

Code -.5/

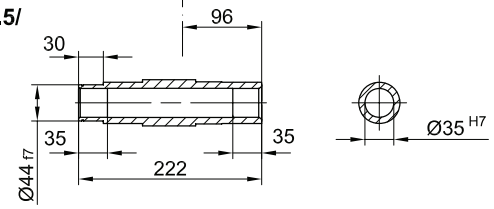

Code -.3/

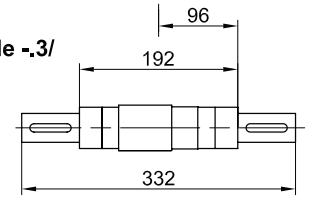

Flanschmasse

BK20(Z)	k	l	m	n	o	p	q	s	t
Standard -3.V/	250	215	180	16	13.5	215.5	124	4	42
klein -2.V/	200	165	130	12	11	206.5	115	3.5	51

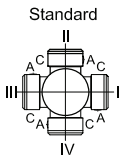

A-A

Typ	a	b	c	d	i	i_{TB}	Ausführung mit Motoranbauten			
							ES../ZS..	G	ES../ZS..-G	RR/RL
							d_{ML}	d_{ML}	d_{ML}	d_{ML}
BK20Z-../D04..	143	100	111	489	90	124.5	532.5	551	595	-
BK20-../D05..	170	60	123	477	100	129.5	518	580	621	-
BK20Z-../D05..	170	102	123	519	100	129.5	560	622	663	-
BK20-../D06..	170	60	123	477	100	131.5	518	580	621	-
BK20Z-../D06..	170	102	123	519	100	131.5	560	622	663	-
BK20-../D07..	190	60	123	497	100	131.5	538	600	641	-
BK20Z-../D07..	190	102	123	539	100	131.5	580	642	683	-
BK20-../D..08..	200	64	156	510	115	149.5	576	617	683	576
BK20Z-../D..08..	200	146	156	592	115	149.5	658	699	765	658
BK20-../D..09..	251	78.5	181	575	124	164	662	682	769	662

The actual gearbox design can vary from the geometry shown.

BK20 - BK20Z

Drehmomentstütze vorne

Code -5.V/

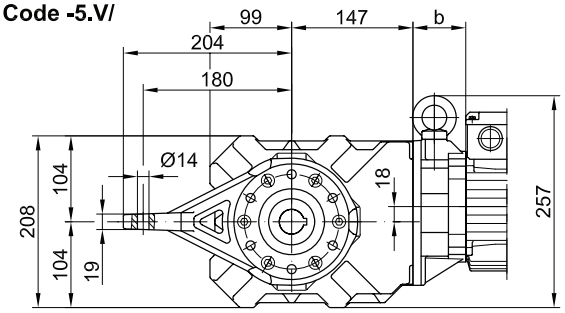

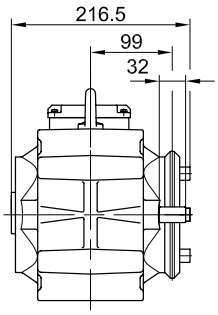

Flansch mit Gewindelöchern vorne

Code -7.V/

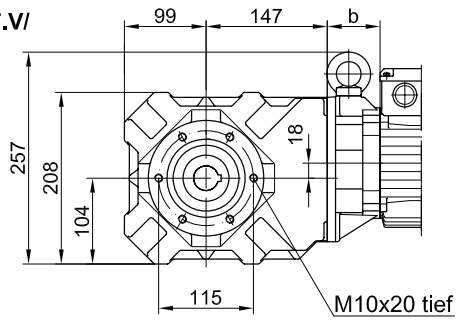

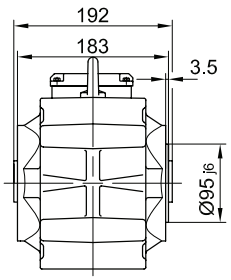

Fuss mit Gewindelöchern unten

Code -6.U/

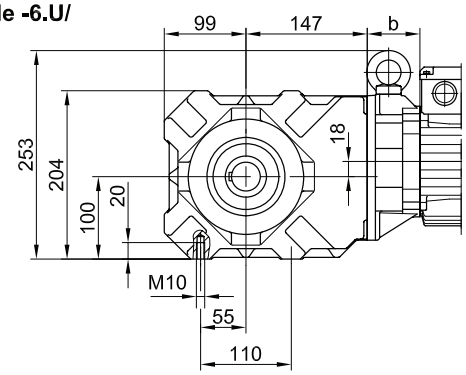

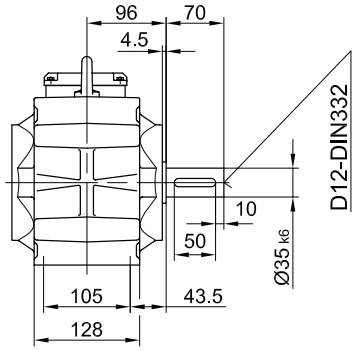

Fuss mit Durchgangslöchern unten

Code -1.U/

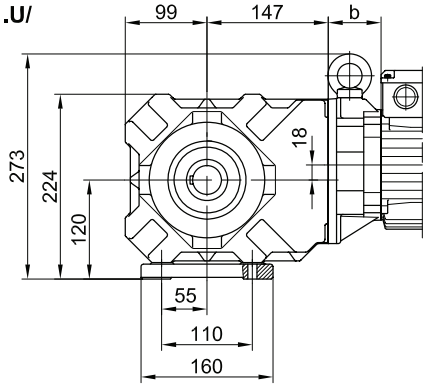

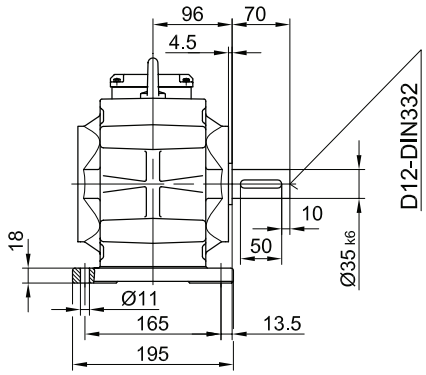

The actual gearbox design can vary from the geometry shown.

BK30 - BK30Z

Flansch mit Durchgangslöchern vorne

Code -3.V/
(Code -2.V/)

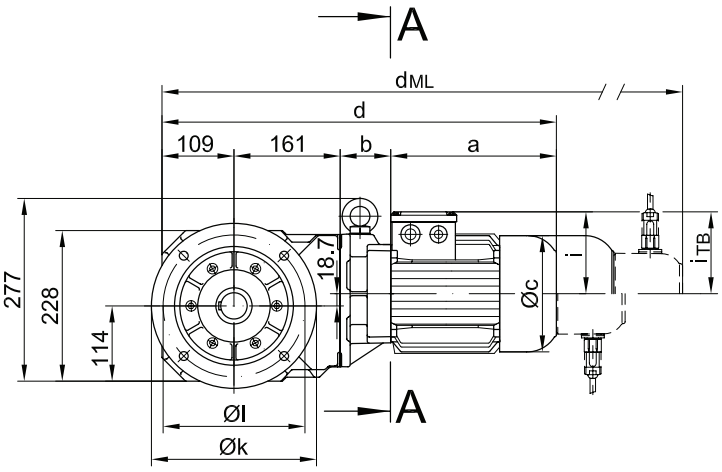

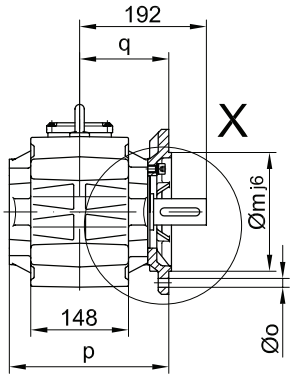

Code -.4/

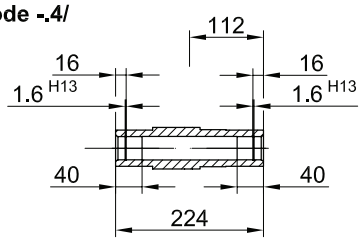

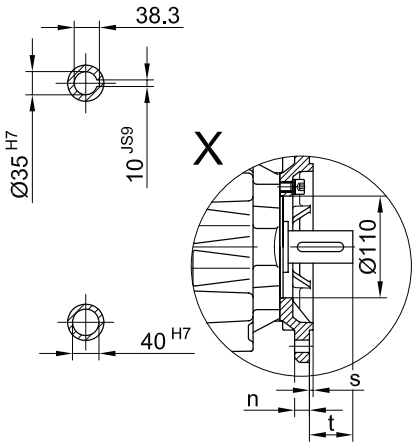

Code -.1/

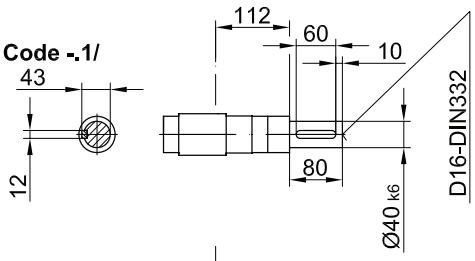

Code -.5/

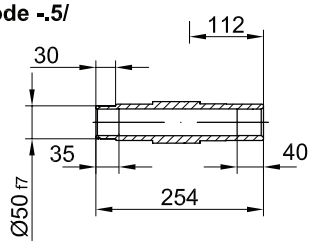

Code -.3/

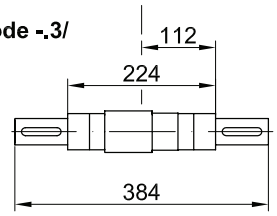

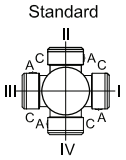

A-A

Flanschmasse

BK30(Z)	k	l	m	n	o	p	q	s	t
Standard -3.V/	250	215	180	16	13.5	242	135	4	57
klein -2.V/	200	165	130	12	11	239	132	3.5	60

Typ	a	b	c	d	i	Ausführung mit Motoranbauten				
						i_{TB}	ES../ZS..	G	ES../ZS..-G	RR/RL
							d_{ML}	d_{ML}	d_{ML}	d_{ML}
BK30-../D05..	170	58	123	499	100	129.5	540	602	643	-
BK30Z-../D05..	170	133.5	123	574	100	129.5	615	677	718	-
BK30-../D06..	170	58	123	499	100	131.5	540	602	643	-
BK30Z-../D06..	170	133.5	123	574	100	131.5	615	677	718	-
BK30-../D07..	190	58	123	519	100	131.5	560	622	663	-
BK30Z-../D07..	190	133.5	123	594	100	131.5	635	697	738	-
BK30-../D..08..	200	62	156	532	115	149.5	598	639	705	598
BK30Z-../D..08..	200	137.5	156	607	115	149.5	673	714	780	673
BK30-../D..09..	251	76.5	181	597	124	164	684	704	791	684
BK30Z-../D..09..	251	152	181	673	124	164	760	780	867	760
BK30-../D..11..	319	83	228	672	181	181	768	779	875	768

The actual gearbox design can vary from the geometry shown.

BK30 - BK30Z

Drehmomentstütze vorne

Code -5.V/

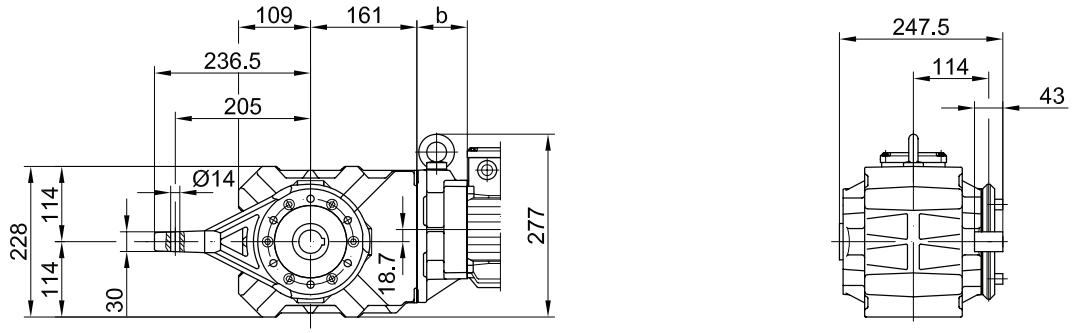

Flansch mit Gewindelöchern vorne

Code -7.V/

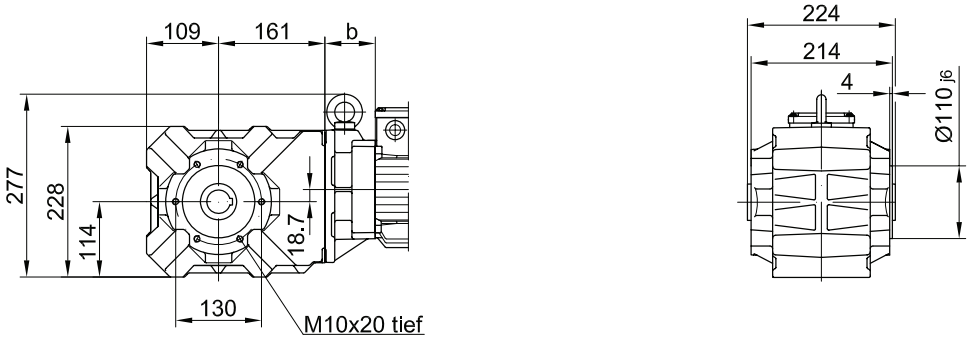

Fuss mit Gewindelöchern unten

Code -6.U/

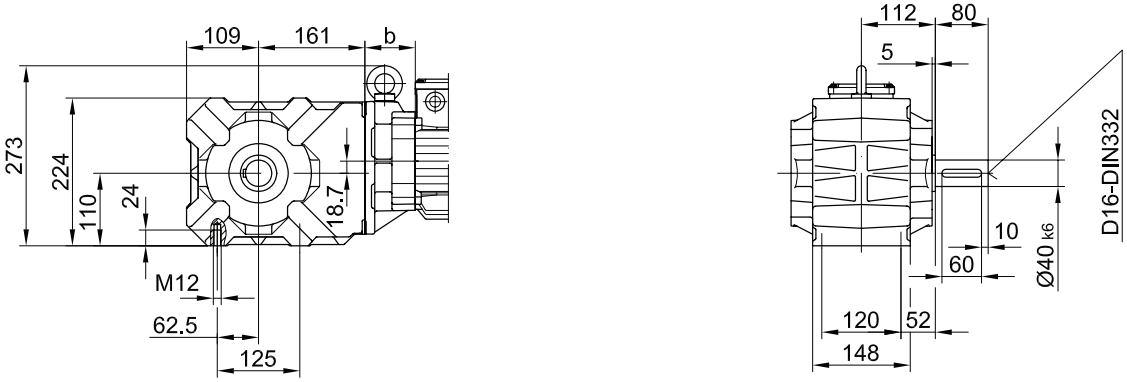

Fuss mit Durchgangslöchern unten

Code -1.U/

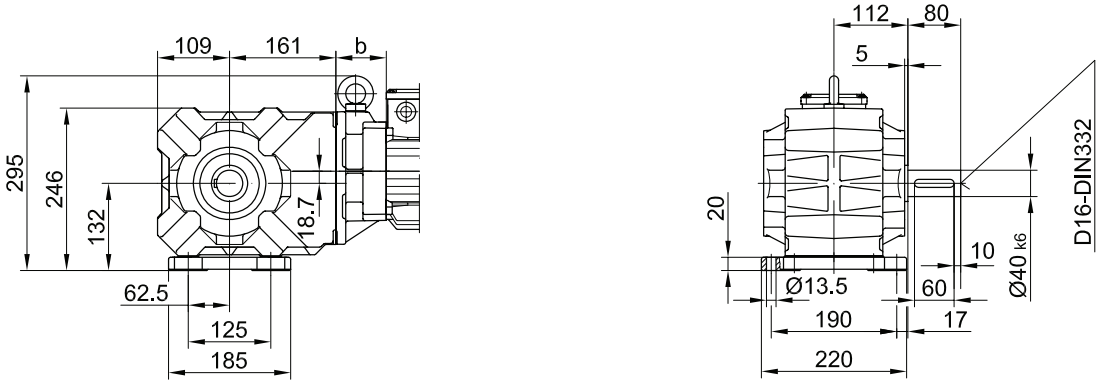

The actual gearbox design can vary from the geometry shown.

BK40 - BK40Z

Flansch mit Durchgangslöchern vorne

Code -3.V/
(Code 4.V/)

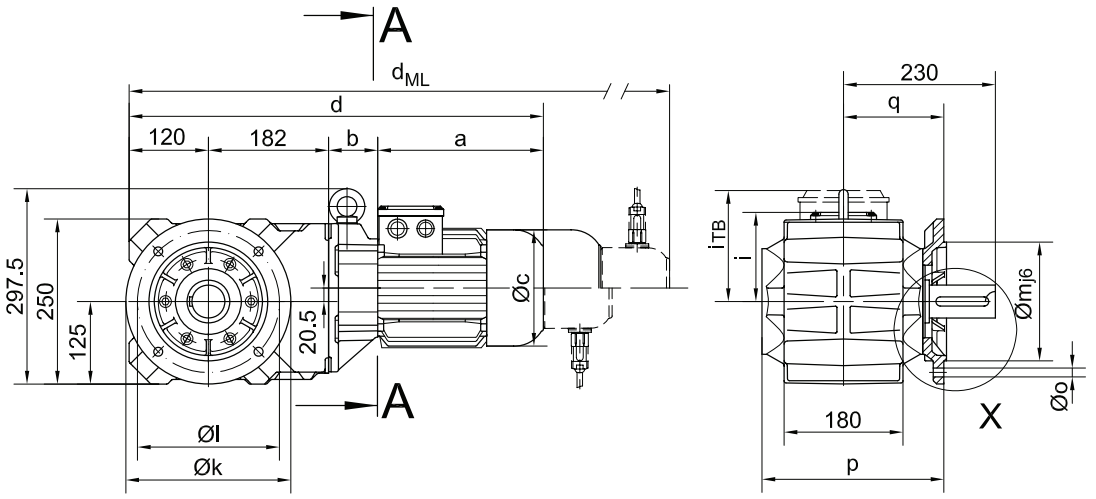

Code -.4/

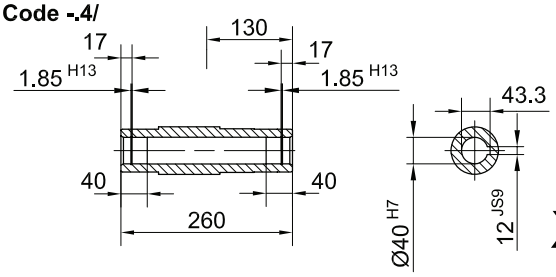

Code -.1/

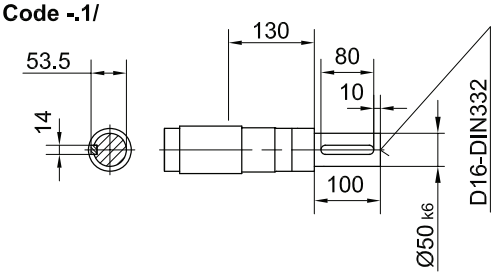

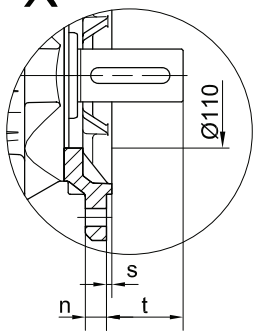

Code -.5/

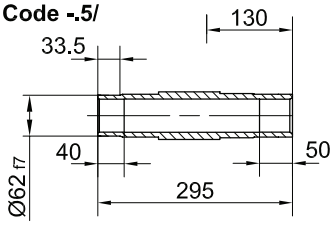

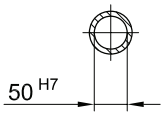

Code -.3/

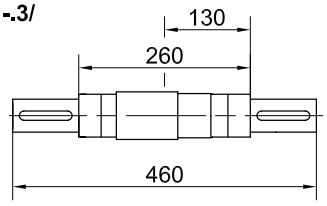

Standard

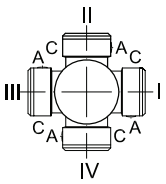

A-A

Flanschmasse

BK40(Z)	k	l	m	n	o	p	q	s	t
Standard -3V/	250	215	180	16	13.5	276	152	4	78
gross -.4V/	300	265	230	20	13.5	282	158	4	72

Type	a	b	c	d	i	Ausführung mit Motoranbauten				
						i_{TB}	ES../ZS..	G	ES../ZS..-G	RR/RL
							d_{ML}	d_{ML}	d_{ML}	d_{ML}
BK40Z-../D05..	170	138.5	123	611	100	129.5	652	714	755	-
BK40Z-../D06..	170	138.5	123	611	100	131.5	652	714	755	-
BK40Z-../D07..	190	138.5	123	631	100	131.5	672	734	775	-
BK40-../D..08..	200	60	156	562	115	149.5	628	669	735	628
BK40Z-../D..08..	200	142.5	156	644	115	149.5	710	751	817	710
BK40-../D..09..	251	74.5	181	627	124	164	714	734	821	714
BK40Z-../D..09..	251	157	181	710	124	164	797	817	904	797
BK40-../D..11..	319	81	228	702	181	181	798	809	905	798

The actual gearbox design can vary from the geometry shown.

BK40 - BK40Z

Drehmomentstütze vorne

Code -5.V/

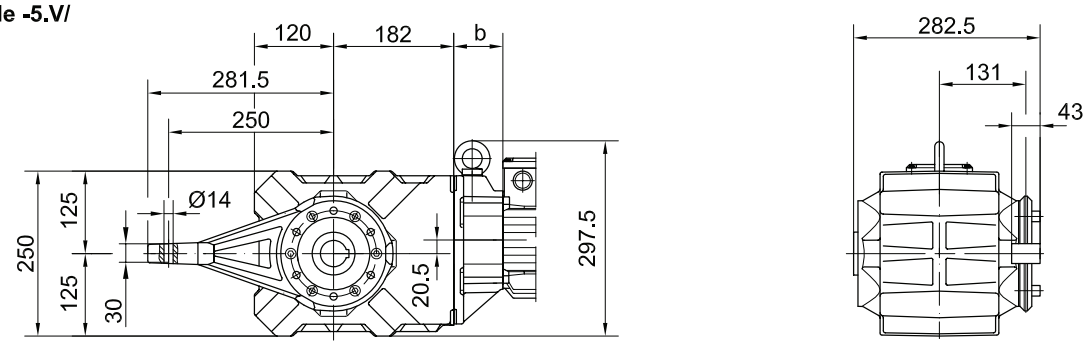

Flansch mit Gewindelöchern vorne

Code -7.V/

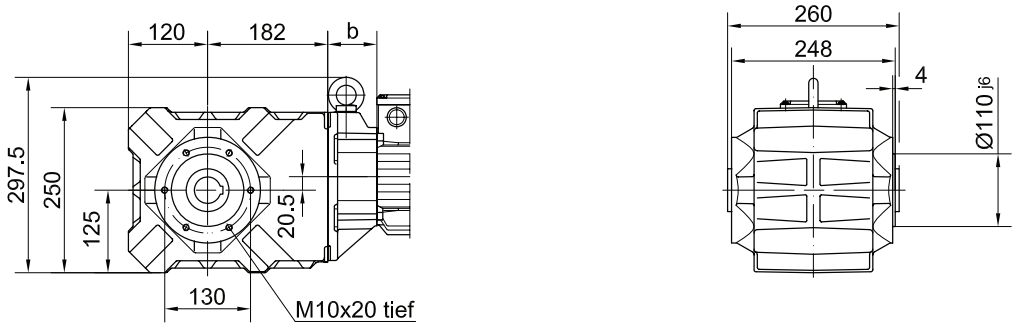

Fuss mit Gewindelöchern unten

Code -6.U/

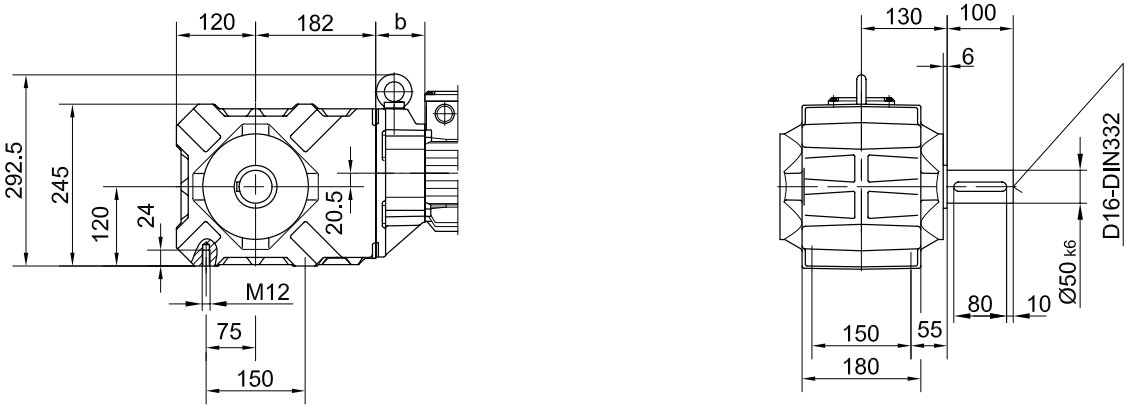

Fuss mit Durchgangslöchern unten

Code -1.U/

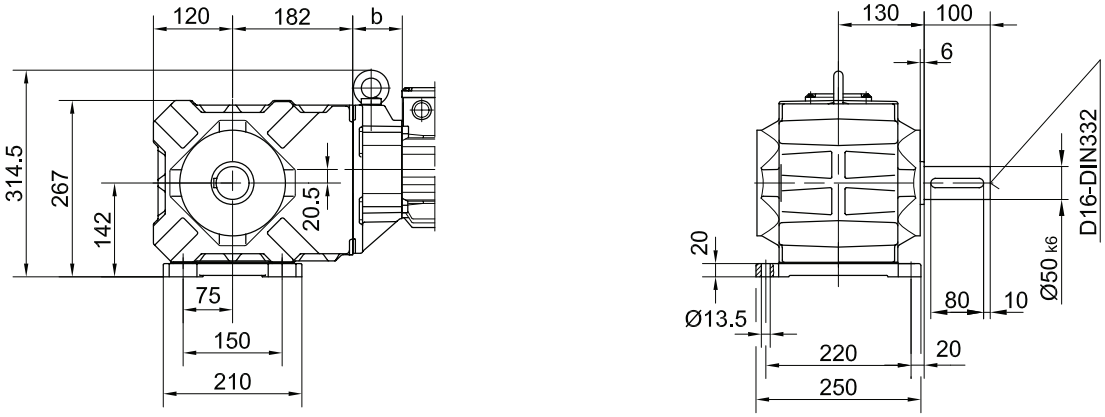

The actual gearbox design can vary from the geometry shown.

BK50 - BK50Z

Flansch mit Durchgangslöchern vorne

Code -3.V/
(Code -2.V/)

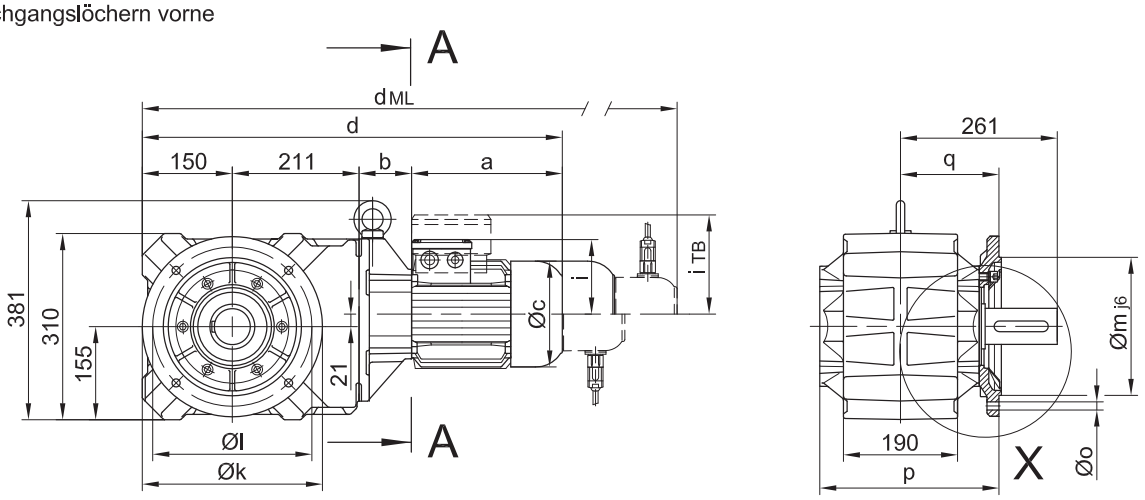

Code -.4/

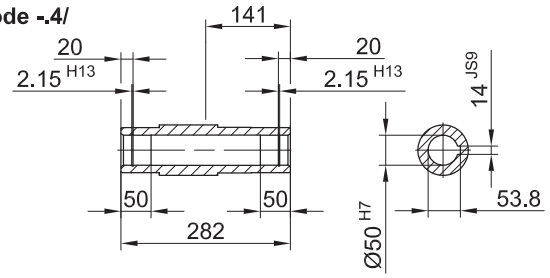

Code -.1/

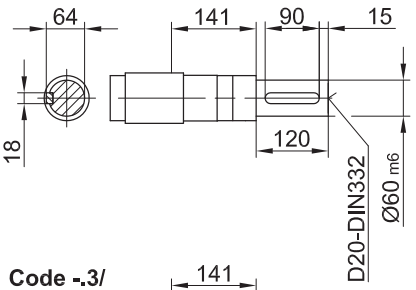

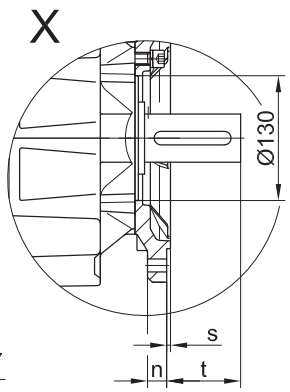

Code -.5/

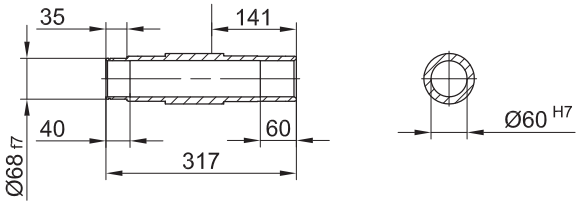

Code -.3/

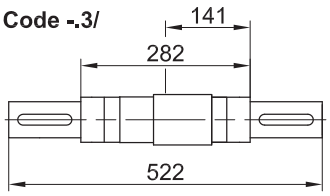

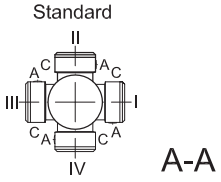

Flanschmasse

BK50(Z)	k	l	m	n	o	p	q	s	t
Standard -3.V/	300	265	230	20	13.5	298.5	164	4	97
klein -2.V/	250	215	180	16	13.5	296	161	4	100

Typ	a	b	c	d	i	Ausführung mit Motoranbauten				
						i_{TB}	ES../ZS..	G	ES../ZS..-G	RR/RL
							d_{ML}	d_{ML}	d_{ML}	d_{ML}
BK50Z-../D05..	170	155	123	687	100	129.5	728	790	831	-
BK50Z-../D06..	170	155	123	687	100	131.5	728	790	831	-
BK50Z-../D07..	190	155	123	707	100	131.5	748	810	851	-
BK50-../D..08..	200	73	156	634	115	149.5	700	741	807	700
BK50Z-../D..08..	200	159	156	720	115	149.5	786	827	893	786
BK50-../D..09..	251	87.5	181	699	124	164	786	806	893	786
BK50Z-../D..09..	251	173.5	181	785	124	164	872	892	979	872
BK50-../D..11..	319	94	228	774	181	181	870	881	977	870
BK50-../D..13..	393	107	266	861	217	217	969	868	1076	969
BK50-../D..16..	429	121	322	911	243	243	1055	1019	1163	1055

The actual gearbox design can vary from the geometry shown.

BK50 - BK50Z

Drehmomentstütze vorne

Code -5.V/

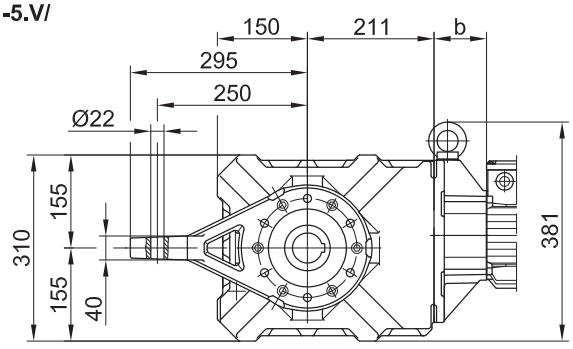

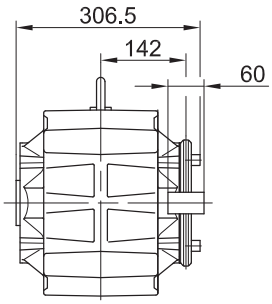

Flansch mit Gewindelöchern vorne

Code -7.V/

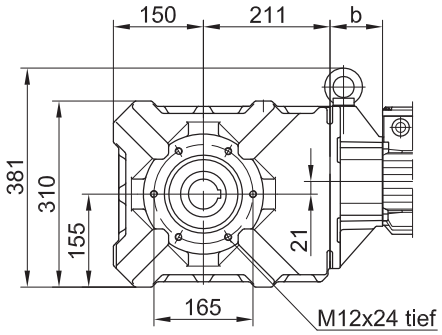

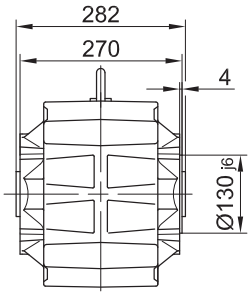

Fuss mit Gewindelöchern unten

Code -6.U/

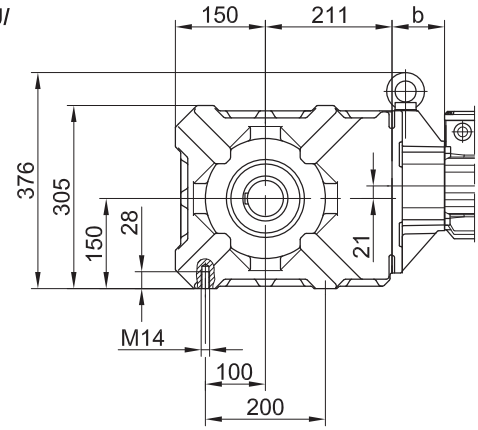

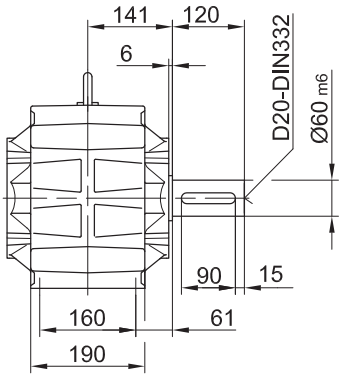

Fuss mit Durchgangslöchern unten

Code -1.U/

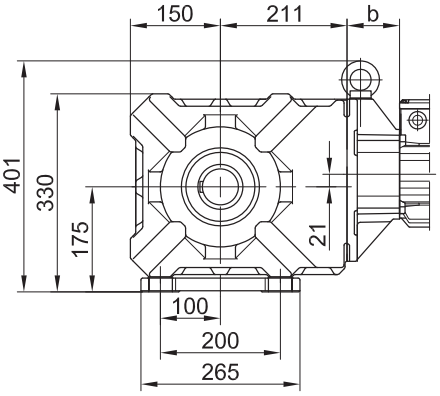

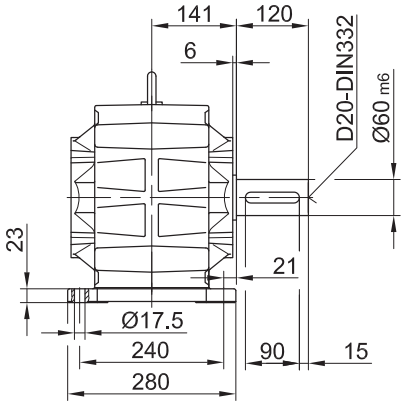

The actual gearbox design can vary from the geometry shown.

BK60 - BK60Z

Flansch mit Durchgangslöchern vorne

Code -3.V/
(Code -2.V/)

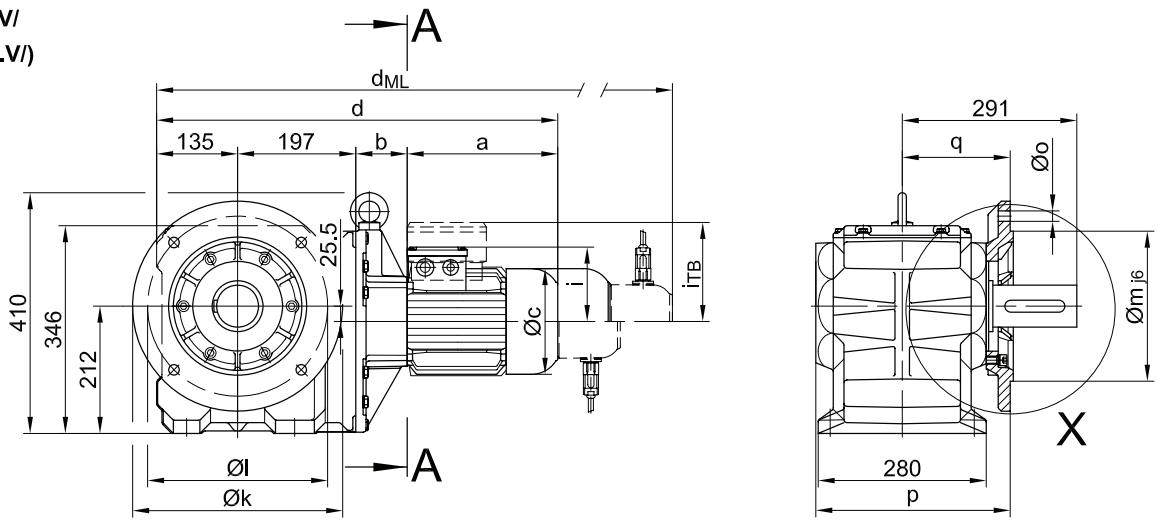

Code -.4/

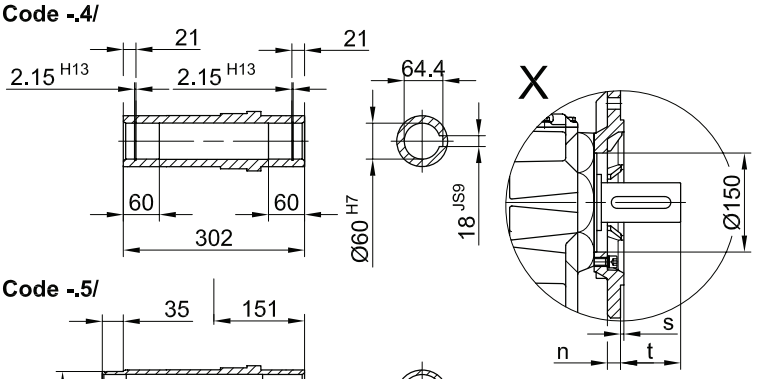

Code -.1/

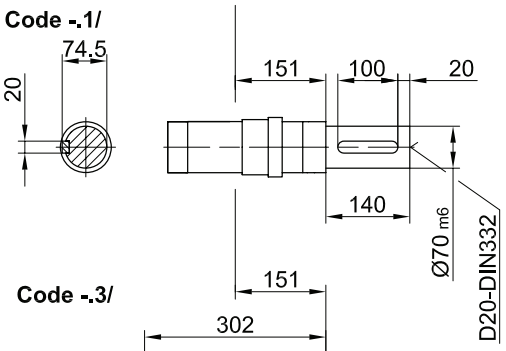

Code -.5/

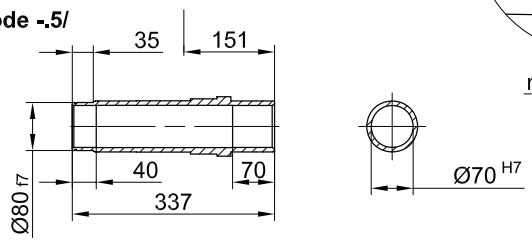

Code -.3/

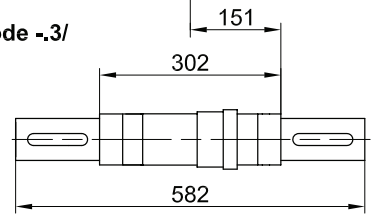

Flanschmasse

BK60(Z)	k	l	m	n	o	p	q	s	t
Standard -3.V/	350	300	250_{h6}	20	17.5	324	180	5	111
klein -2.V/	300	265	230_{j6}	20	13.5	332	188	4	103

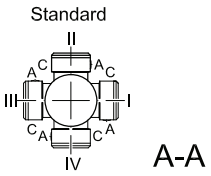

Typ	a	b	c	d	i	Ausführung mit Motoranbauten				
						i_B	ES../ZS..	G	ES../ZS..-G	RR/RL
							d_{ML}	d_{ML}	d_{ML}	d_{ML}
BK60Z-../D..08..	200	181	156	713	115	149.5	782	820	889	782
BK60-../D..09..	251	85.5	181	668	124	164	755	775	862	755
BK60Z-../D..09..	251	195.5	181	778	124	164	865	885	972	865
BK60-../D..11..	319	92	228	743	181	181	839	850	946	839
BK60Z-../D..11..	319	202	228	853	181	181	949	960	1056	949
BK60-../D..13..	393	105	266	830	217	217	938	937	1045	938
BK60-../D..16..	429	119	322	880	243	243	1024	988	1134	1024

The actual gearbox design can vary from the geometry shown.

BK60 - BK60Z

Drehmomentstütze vorne

Code -5.V/

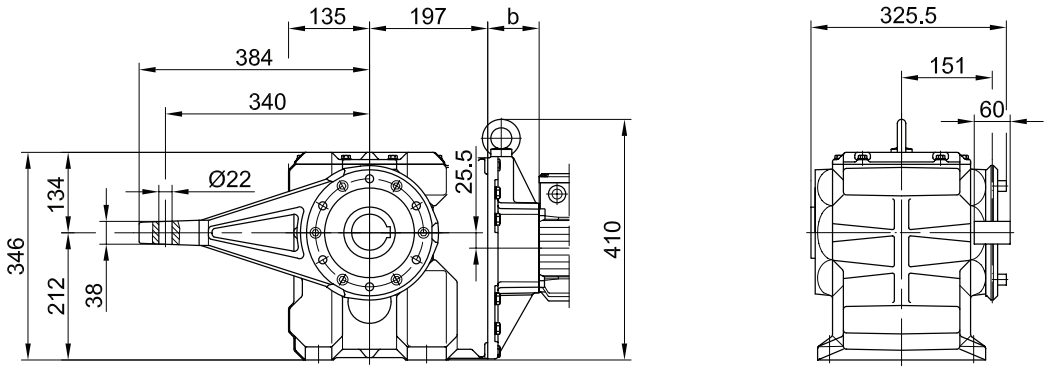

Flansch mit Gewindelöchern vorne

Code -7.V/

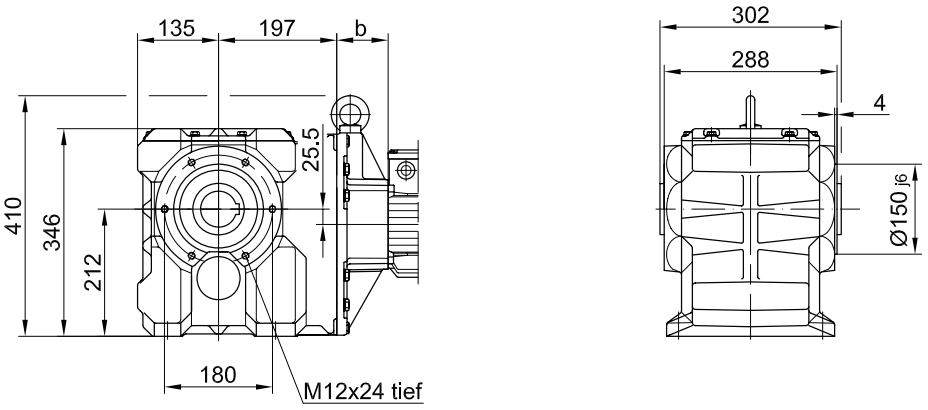

Fuss mit Durchgangslöchern unten

Code -1.U/

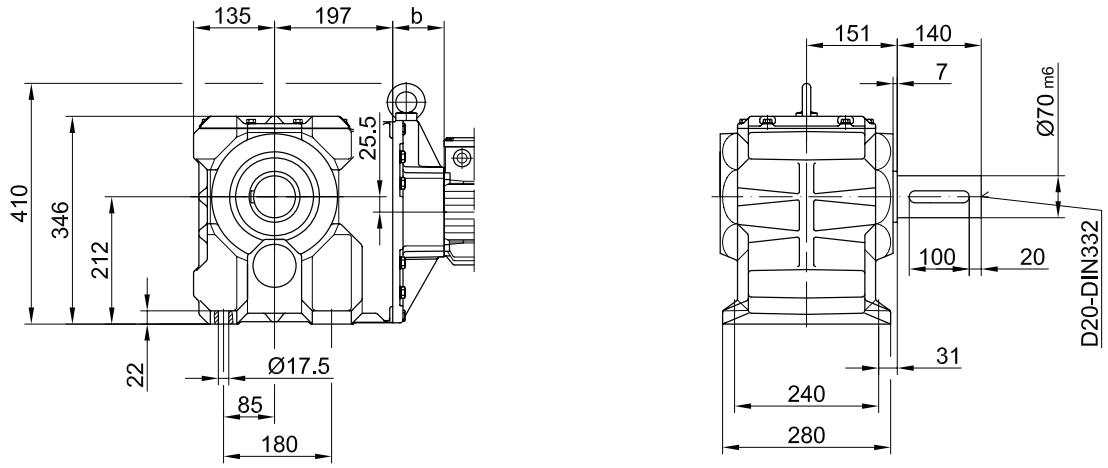

The actual gearbox design can vary from the geometry shown.

BK70 - BK70Z

Flansch mit Durchgangslöchern vorne

Code -3.V/
(Code -2.V/)
(Code -4.V/)

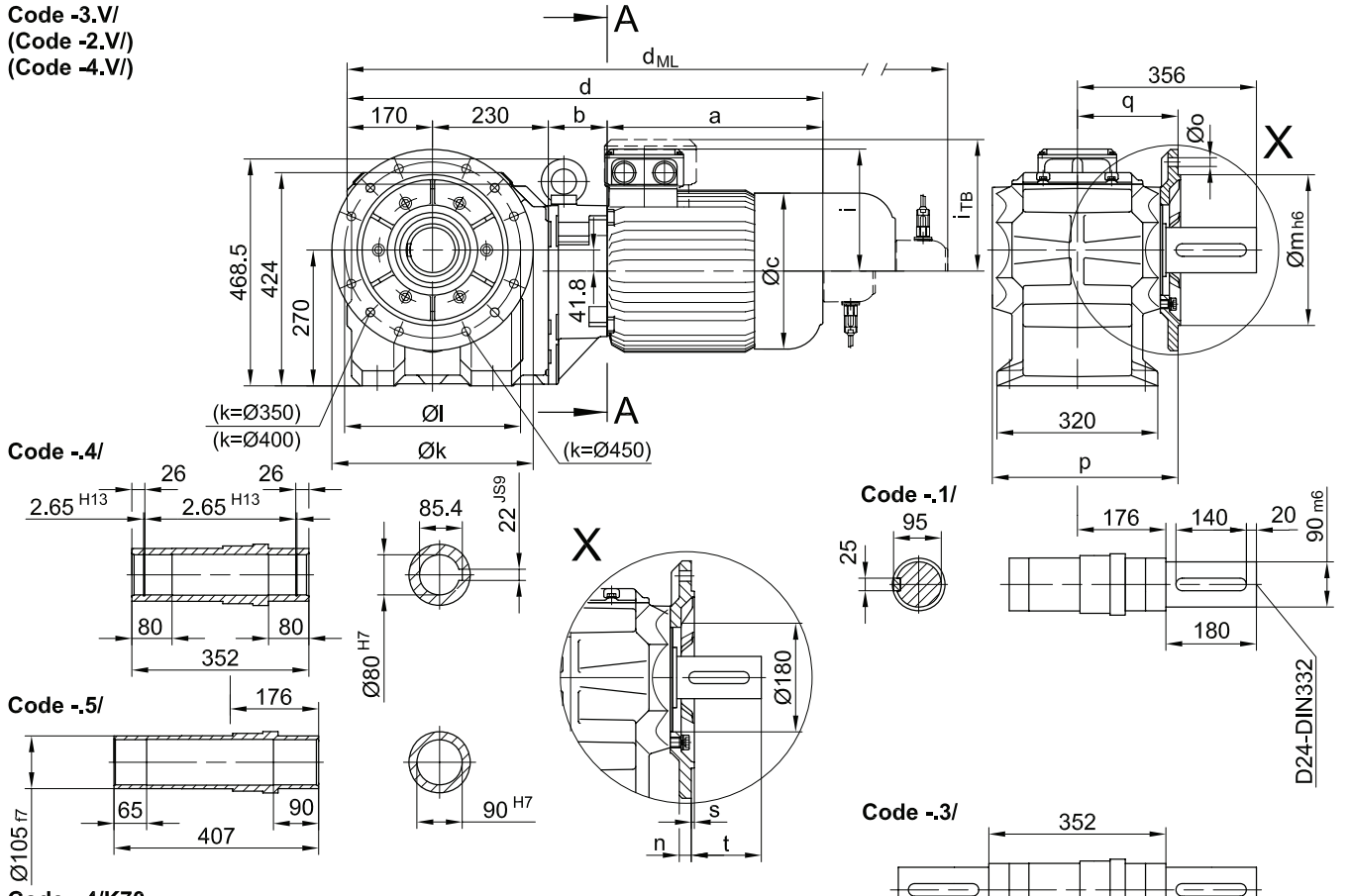

Flanschmasse

BK70(Z)	k	l	m	n	o	p	q	s	t
Standard -3.V/	400	350	300	20	4 x Ø17.5	369	200	5	156
klein -2.V/	350	300	250	20	4 x Ø17.5	369	200	5	156
gross -4.V/	450	400	350	22	8 x Ø17.5	379	210	5	146

Typ	a	b	c	d	i	Ausführung mit Motoranbauten				
						i_{TB}	ES../ZS..	G	ES../ZS..-G	RR/RL
							d_{ML}	d_{ML}	d_{ML}	d_{ML}
BK70Z-../D..08..	200	202	156	802	115	149.5	868	909	975	868
BK70-../D..09..	251	83.5	181	734	124	164	821	841	928	821
BK70Z-../D..09..	251	216.5	181	867	124	164	954	974	1063	954
BK70-../D..11..	319	90	228	809	181	181	905	916	1012	905
BK70Z-../D..11..	319	223	228	942	181	181	1038	1049	1145	1038
BK70-../D..13..	393	103	266	896	217	217	1004	1001	1111	1004
BK70Z-../D..13..	393	236	266	1029	217	217	1137	1136	1244	1137
BK70-../D..16..	429	117	322	946	243	243	1090	1054	1198	1090
BK70Z-../D..16..	429	250	322	1079	243	243	1223	1187	1331	1223
BK70-../D..18..	528	139	368	1067	288	288	1213	1175	1328	1213

The actual gearbox design can vary from the geometry shown.

BK70 - BK70Z

Drehmomentstütze vorne

Code -5.V/

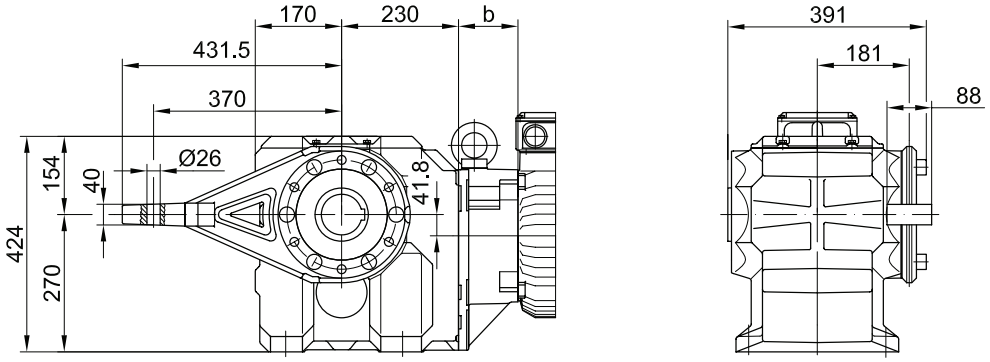

Flansch mit Gewindelöchern vorne

Code -7.V/

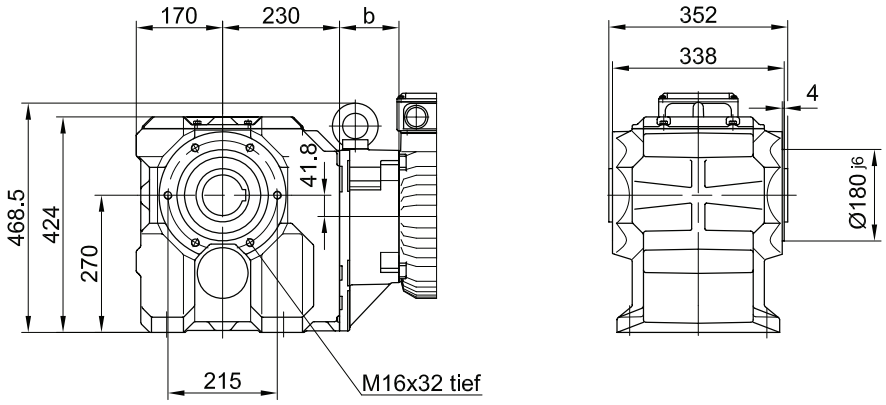

Fuss mit Durchgangslöchern unten

Code -1.U/

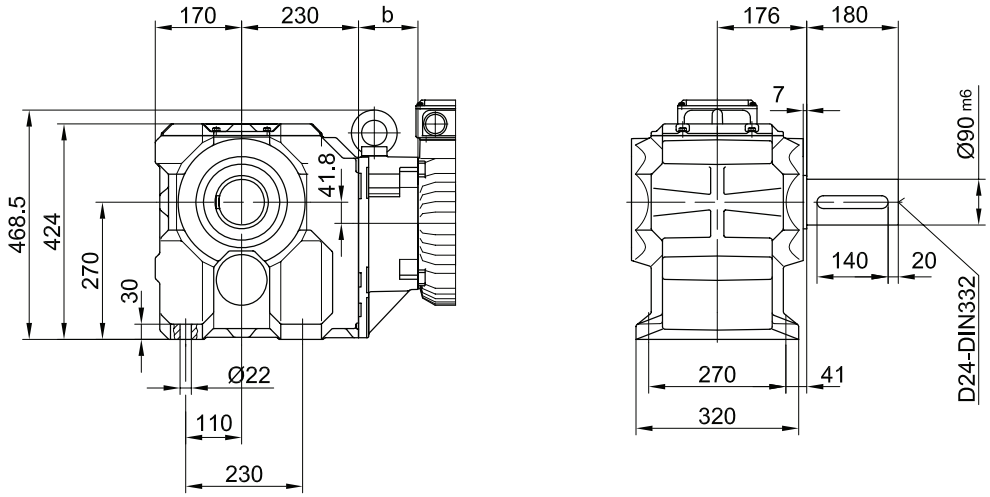

The actual gearbox design can vary from the geometry shown.

BK80 - BK80Z

Flansch mit Durchgangslöchern vorne

Code -3.V/
(Code -4.V/)

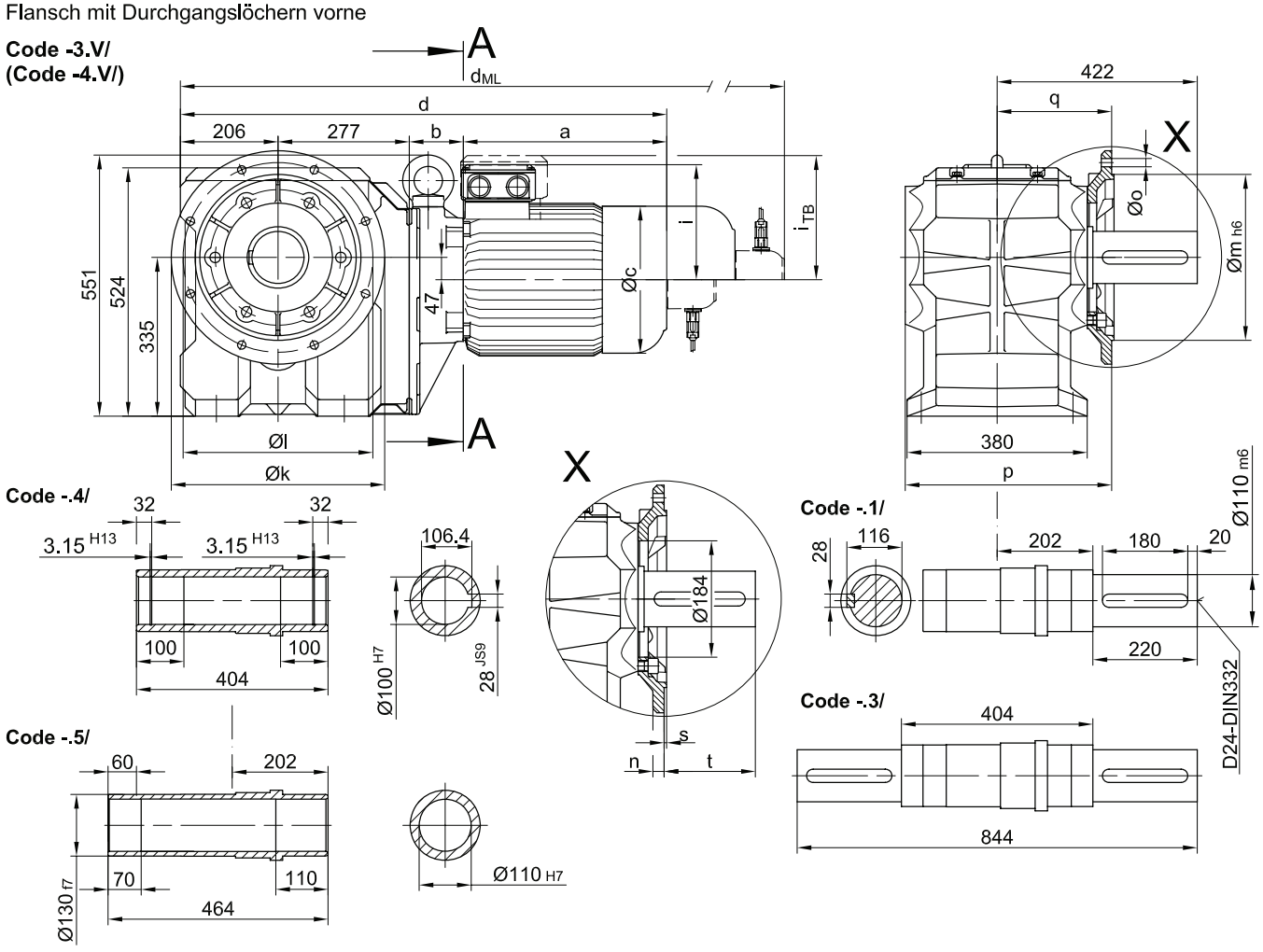

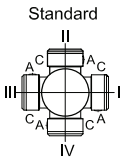

A-A

Flanschmasse

BK80(Z)	k	l	m	n	o	p	q	s	t
Standard -3.V/	450	400	350	22	17.5	439	245	5	177
gross -4.V/	550	500	450	22	17.5	444	250	5	172

Typ	a	b	c	d	i	i_{TB}	Ausführung mit Motoranbauten			
							ES../ZS..	G	ES../ZS..-G	RR/RL
							d_{ML}	d_{ML}	d_{ML}	d_{ML}
BK80Z-../D..09..	251	252.5	181	986	124	164	1073	1093	1180	1073
BK80-../D..11..	319	87	228	889	181	181	985	1096	1092	985
BK80Z-../D..11..	319	259	228	1061	181	181	1157	1168	1264	1157
BK80-../D..13..	393	100	266	976	217	217	1084	1083	1191	1084
BK80Z-../D..13..	393	272	266	1148	217	217	1256	1255	1363	1256
BK80-../D..16..	429	114	322	1026	243	243	1170	1134	1278	1170
BK80Z-../D..16..	429	286	322	1198	243	243	1342	1306	1450	1342
BK80-../D..18..	528	136	368	1147	288	288	1296	1255	1404	1296

The actual gearbox design can vary from the geometry shown.

BK80 - BK80Z

Drehmomentstütze vorne

Code -5.V/

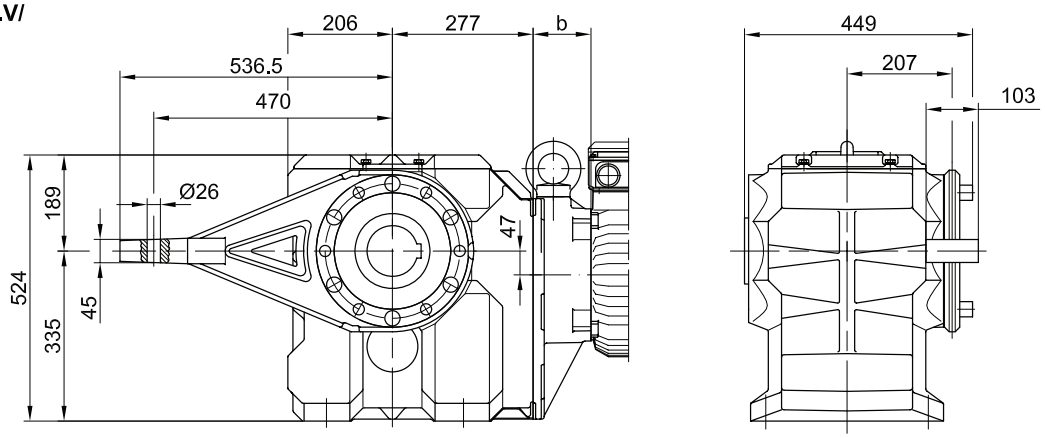

Flansch mit Gewindelöchern vorne

Code -7.V/

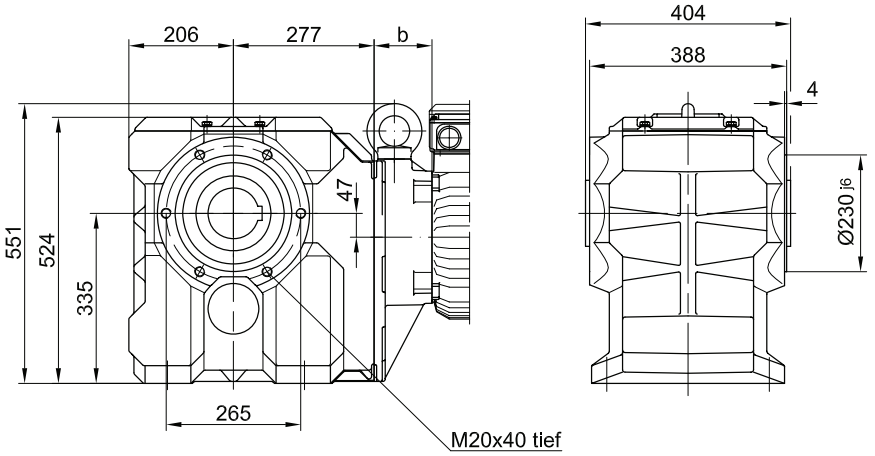

Fuss mit Durchgangslöchern unten/

Code -1.U/

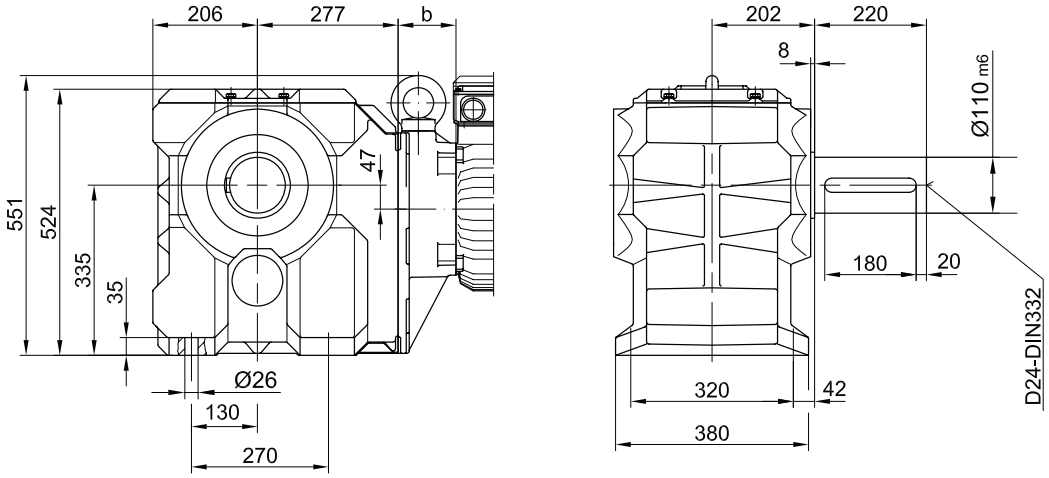

The actual gearbox design can vary from the geometry shown.

BK90 - BK90Z

Flansch mit Durchgangslöchern vorne

Code -3.V/
(Code -4.V/)

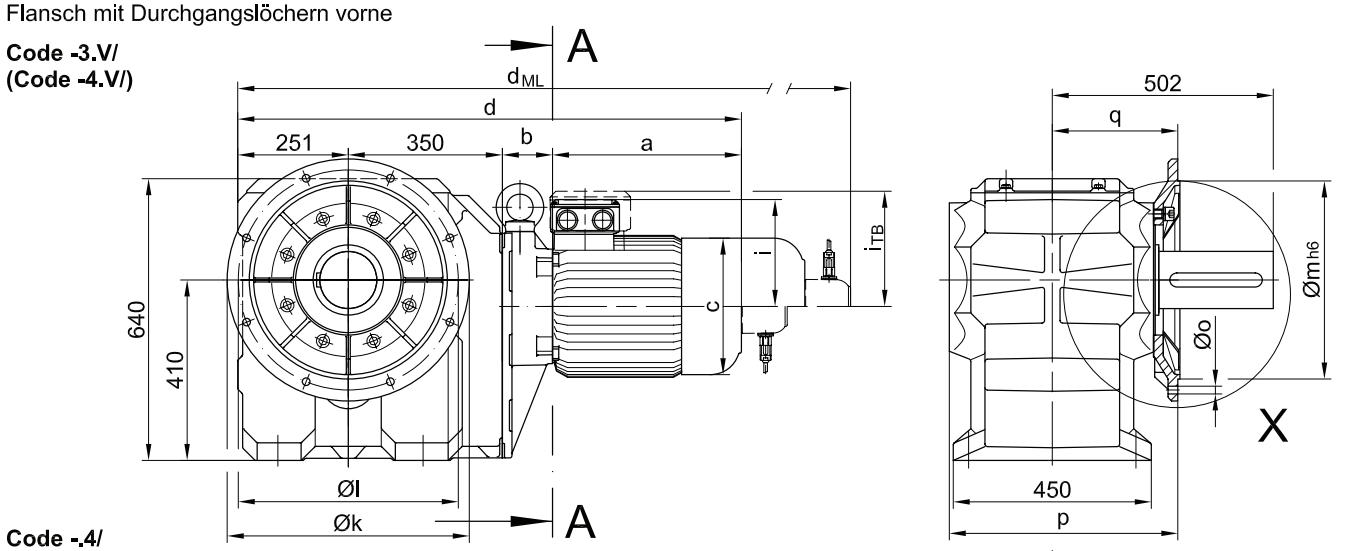

Code -.4/

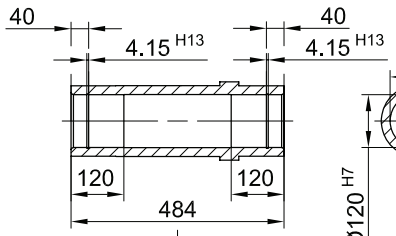

Code -.5/

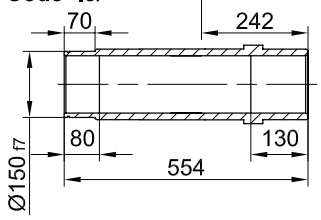

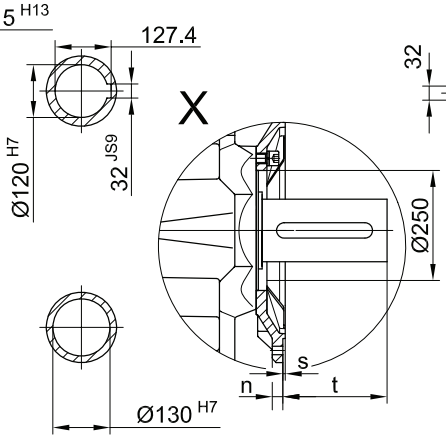

Code -.1/

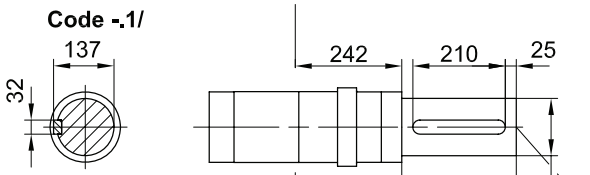

Code -.3/

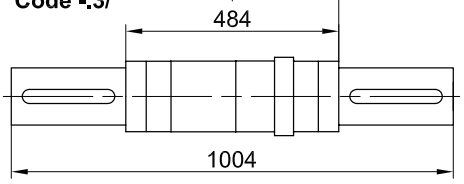

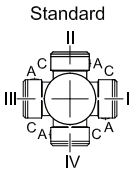

A-A

Flanschmasse

BK90(Z)	k	l	m	n	o	p	q	s	t
Standard -3.V/	550	500	450	22	17.5	519	285	5	217
gross -4.V/	660	600	550	25	22	513	279	6	223

Typ	a	b	c	d	i	i_{TB}	Ausführung mit Motoranbauten			
							ES.../ZS..	G	ES.../ZS..-G	RR/RL
							d_{ML}	d_{ML}	d_{ML}	d_{ML}
BK90Z-../D..09..	251	267	181	1119	124	164	1206	1226	1313	1206
BK90Z-../D..11..	319	273.5	228	1194	181	181	1290	1301	1397	1290
BK90-../D..13..	393	100	266	1094	217	217	1202	1203	1309	1202
BK90Z-../D..13..	393	286.5	266	1281	217	217	1389	1388	1496	1389
BK90-../D..16..	429	114	322	1144	243	243	1288	1252	1396	1288
BK90Z-../D..16..	429	300.5	322	1331	243	243	1475	1439	1583	1475
BK90-../D..18..	528	136	368	1265	288	288	1414	1373	1522	1414
BK90Z-../D..18..	528	322.5	368	1451	288	288	1600	1559	1708	1600

The actual gearbox design can vary from the geometry shown.

BK90 - BK90Z

Drehmomentstütze vorne

Code -5.V/

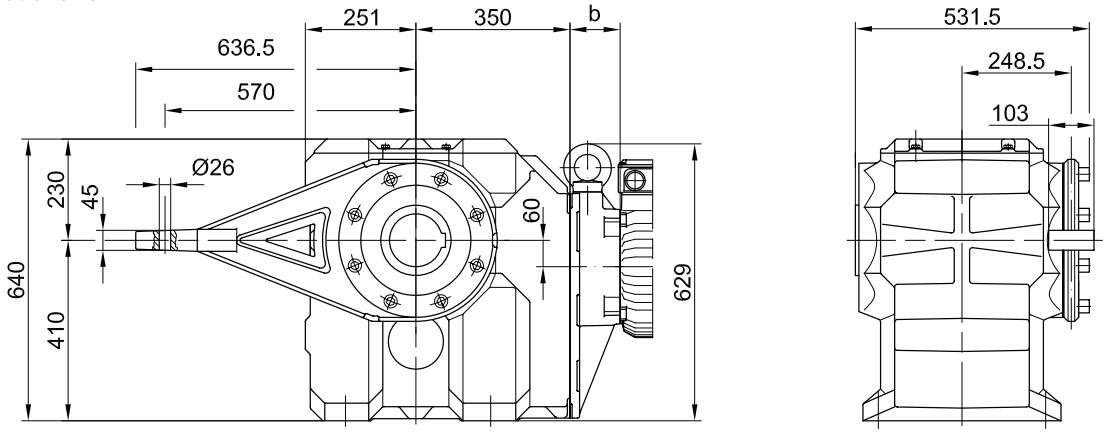

Flansch mit Gewindelöchern vorne

Code -7.V/

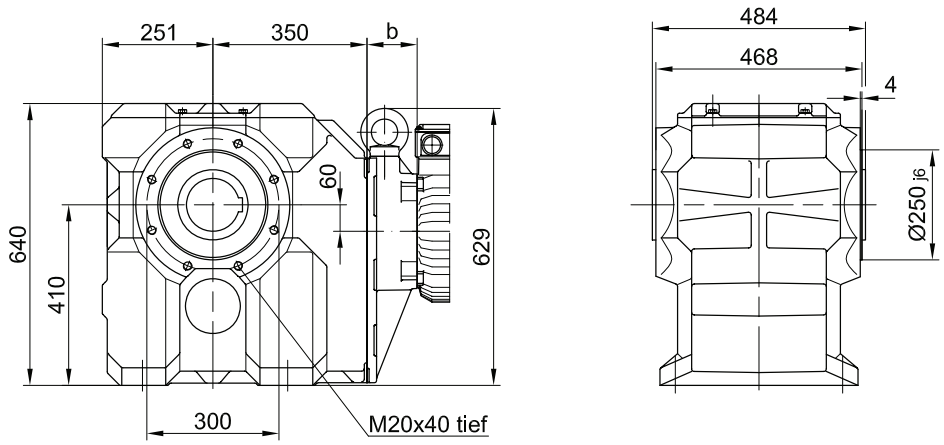

Fuss mit Durchgangslöchern unten

Code -1.U/

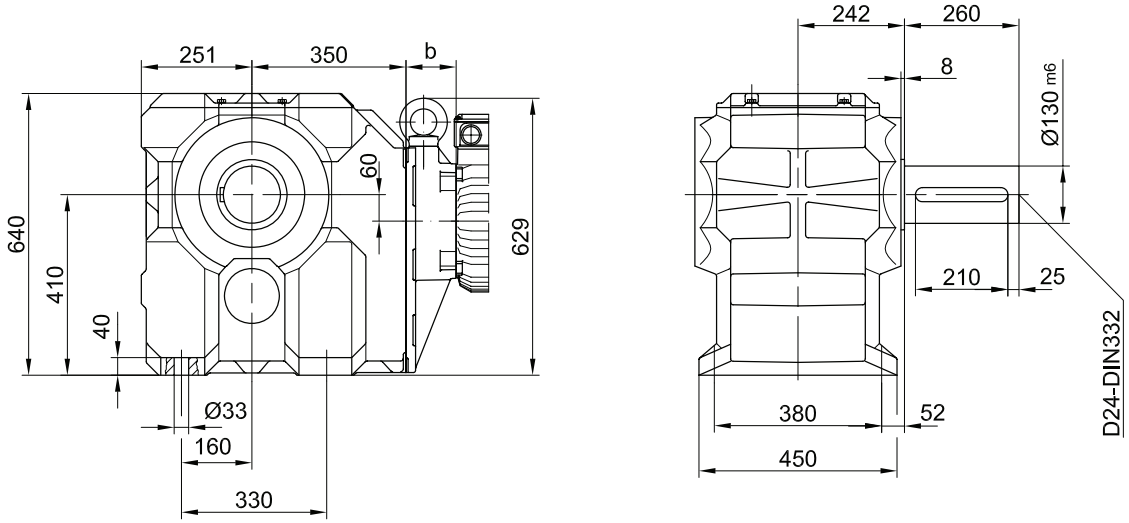

The actual gearbox design can vary from the geometry shown.

BK10G06

Flansch mit Durchgangslöchern vorne

Code -3.V/
(Code -2.V/)

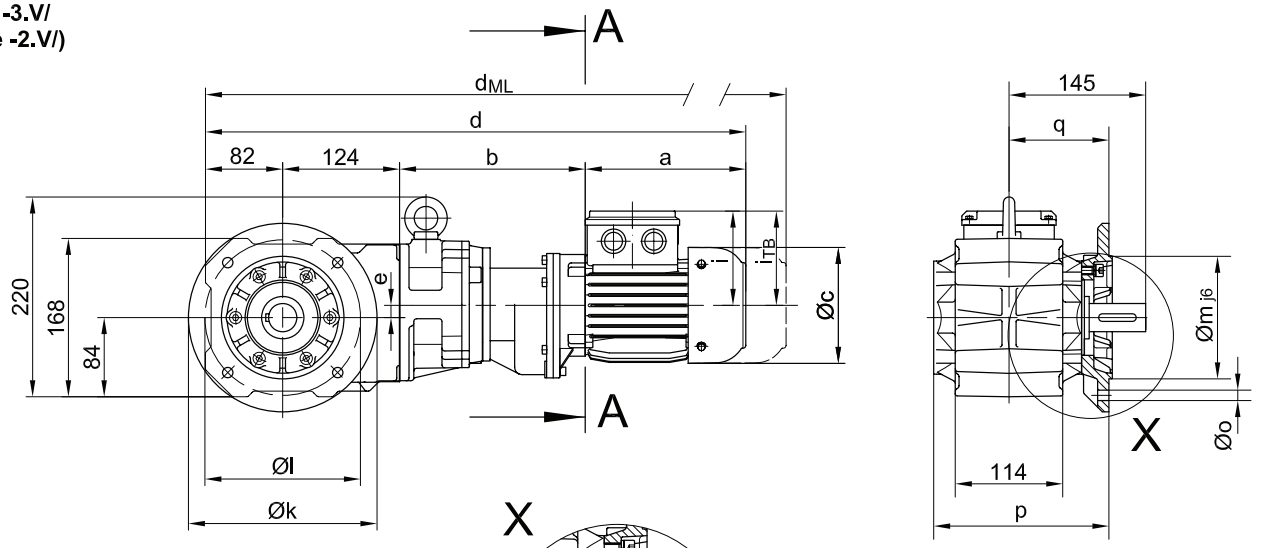

Code -.4/

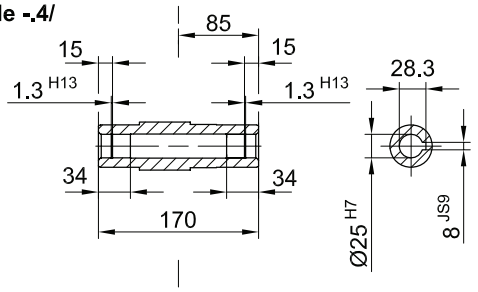

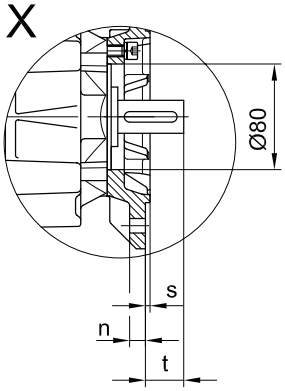

Code -.1/

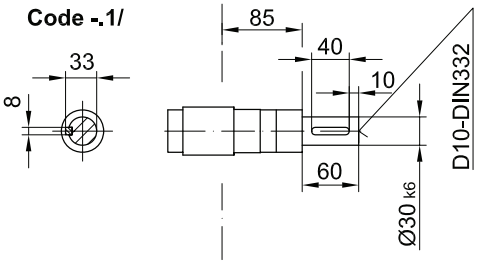

Code -.5/

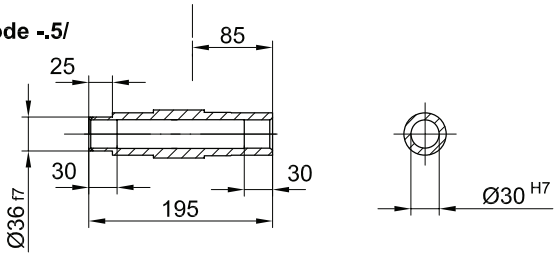

Code -.3/

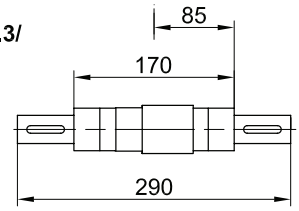

Flanschmasse

BK10G..	k	l	m	n	o	p	q	s	t
Standard -3.V/	200	165	130	12	11	186.5	106	3.5	39
klein -2.V/	160	130	110	10	9	179.5	99	3.5	46

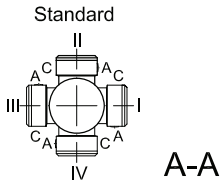

A-A

Typ	a	b	c	d	e	i	Ausführung mit Motoranbauten				
							i_{TB}	ES../EZ..	G	ES../EZ..-G	RR/RL
								d_{ML}	d_{ML}	d_{ML}	d_{ML}
BK10G06-../D04..	143	195	111	544	13	90	124.5	587.5	606.5	650	-
BK10G06-../D05..	170	197	123	574	13	100	129.5	615	677	718	-
BK10G06-../D06..	170	197	123	574	13	100	131.5	615	677	718	-
BK10G06-../D07..	190	197	123	594	13	100	131.5	635	697	738	-
BK10G06-../D..08..	200	241	156	647	13	115	149.5	713	754	820	713

The actual gearbox design can vary from the geometry shown.

BK10G06

Drehmomentstütze vorne

Code -5.V/

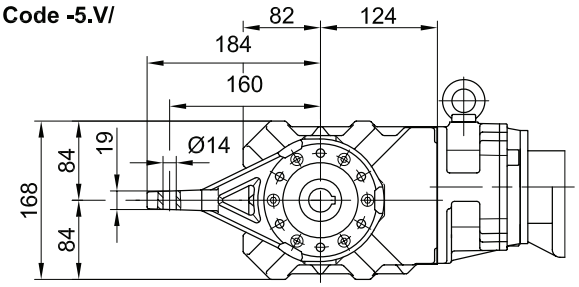

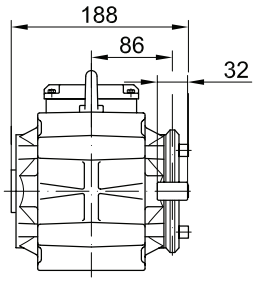

Flansch mit Gewindelöchern vorne

Code -7.V/

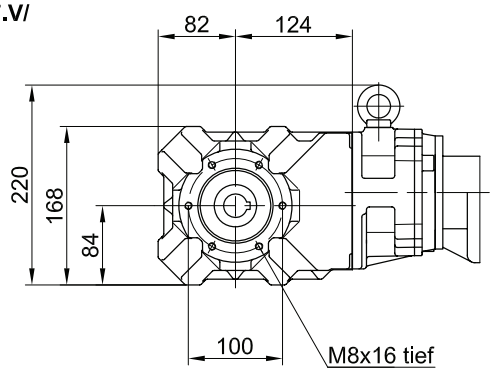

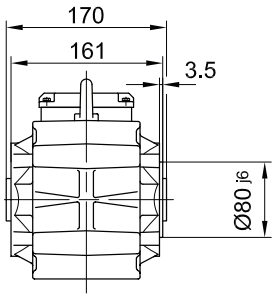

Fuss mit Gewindelöchern unten

Code -6.U/

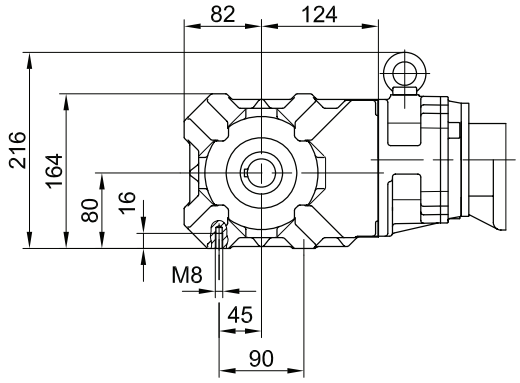

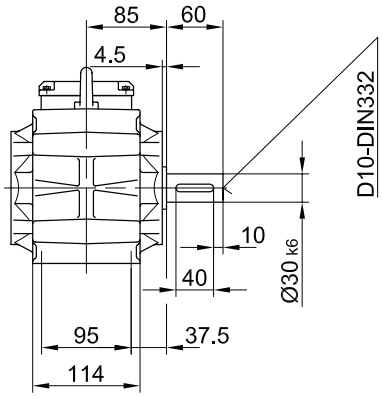

Fuss mit Durchgangslöchern unten

Code -1.U/

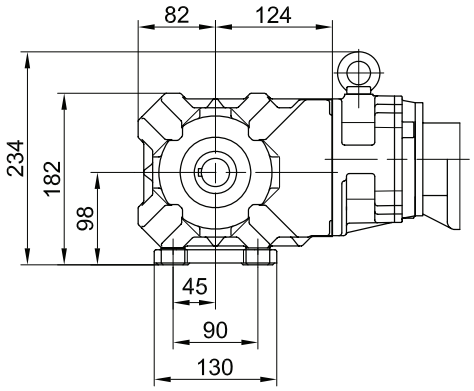

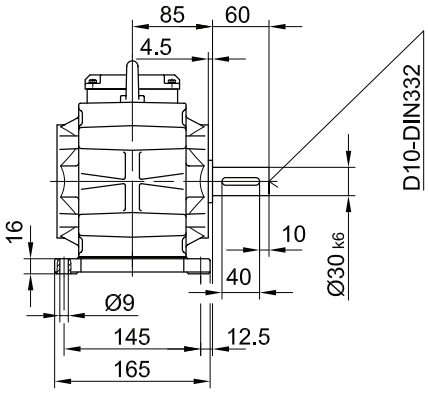

The actual gearbox design can vary from the geometry shown.

12

BK20G06

Flansch mit Durchgangslöchern vorne

Code -3.V/
(Code -2.V/)

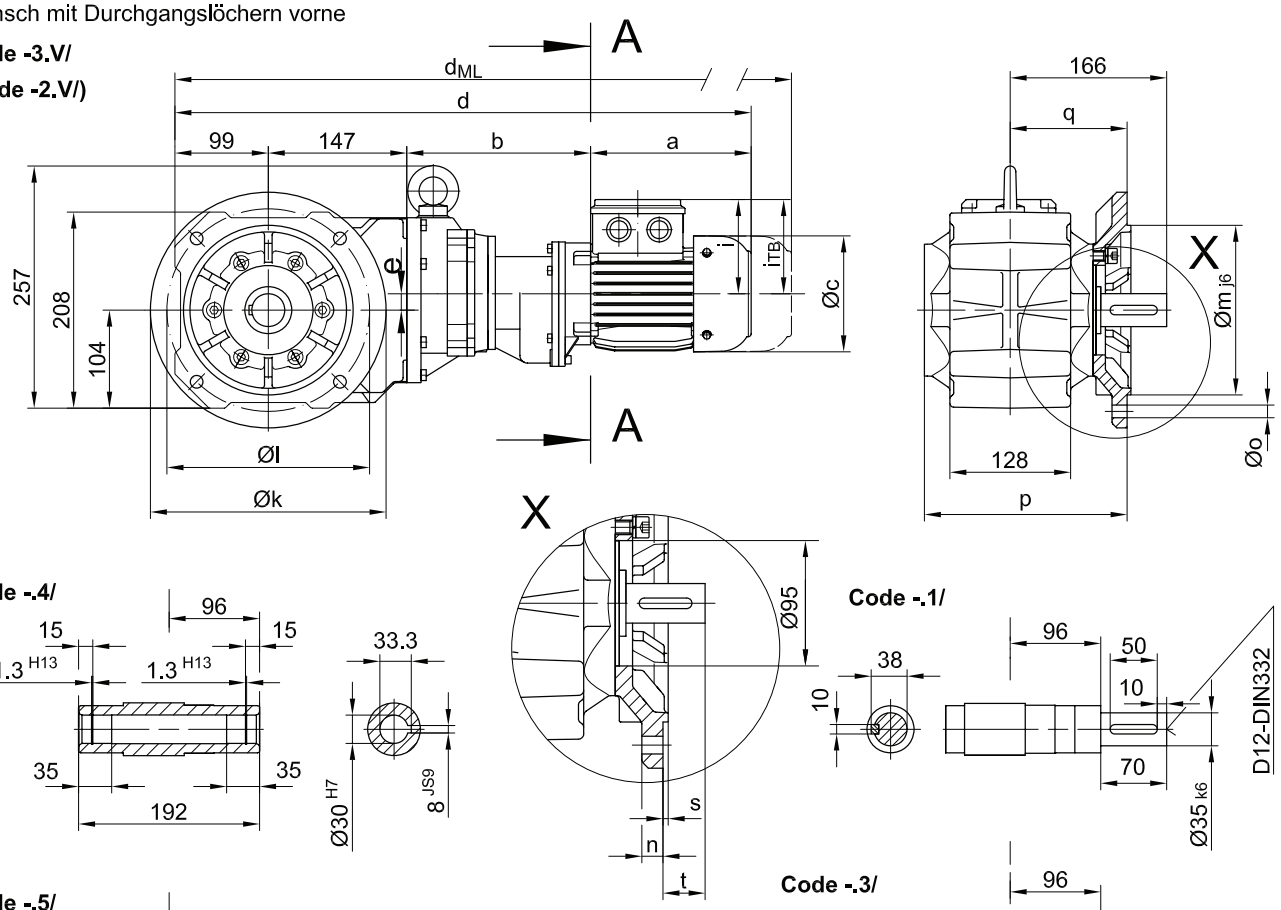

Code -.4/

Code -.1/

Code -.5/

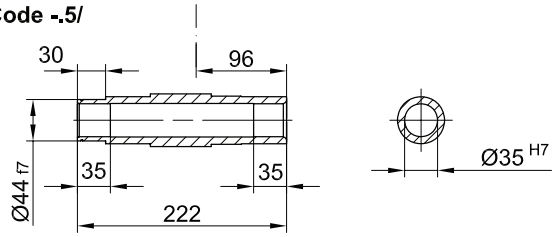

Code -.3/

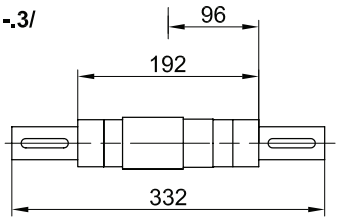

Flanschmasse

BK20G..	k	l	m	n	o	p	q	s	t
Standard -3.V/	250	215	180	16	13.5	215.5	124	4	42
klein -2.V/	200	165	130	12	11	206.5	115	3.5	51

Standard

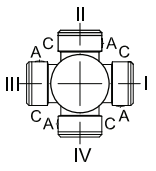

A-A

Typ	a	b	c	d	e	i	Ausführung mit Motoranbauten				
							i_{TB}	ES../ZS..	G	ES../ZS..-G	RR/RL
								d_{ML}	d_{ML}	d_{ML}	d_{ML}
BK20G06-../D04..	143	193	111	582	17	90	124.5	625.5	644.5	688	-
BK20G06-../D05..	170	195	123	612	17	100	129.5	653	715	756	-
BK20G06-../D06..	170	195	123	612	17	100	131.5	653	715	756	-
BK20G06-../D07..	190	195	123	632	17	100	131.5	673	735	776	-
BK20G06-../D..08..	200	239	156	685	17	115	149.5	751	792	858	751

The actual gearbox design can vary from the geometry shown.

BK20G06

Drehmomentstütze vorne

Code -5.V/

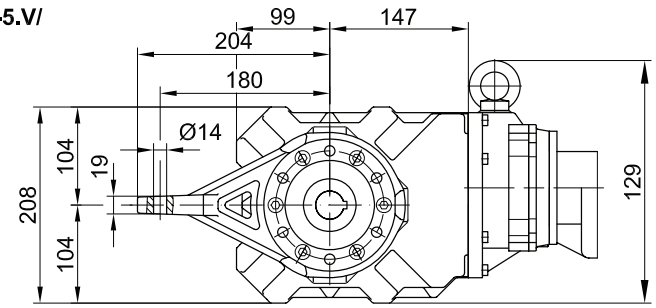

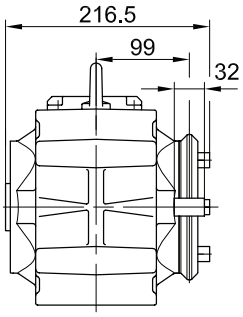

Flansch mit Gewindelöchern vorne

Code -7.V/

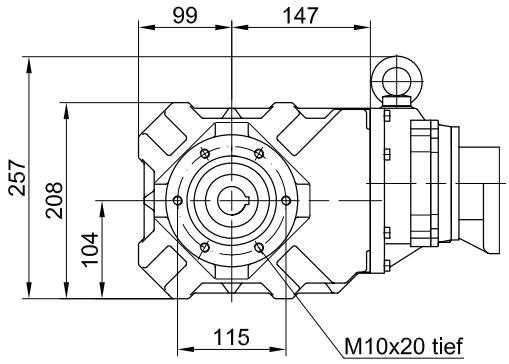

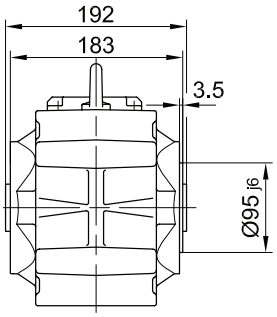

Fuss mit Gewindelöchern unten

Code -6.U/

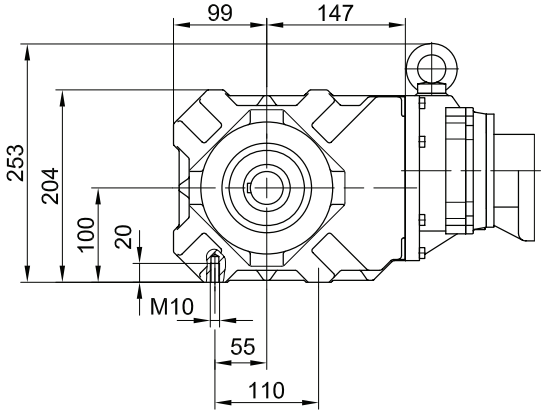

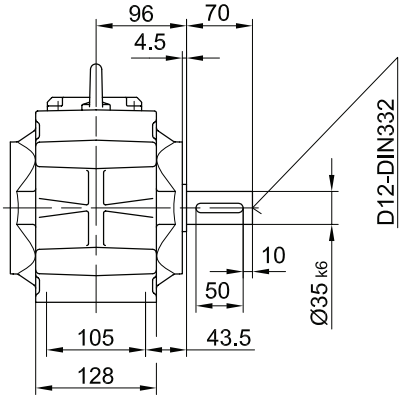

Fuss mit Durchgangslöchern unten

Code -1.U/

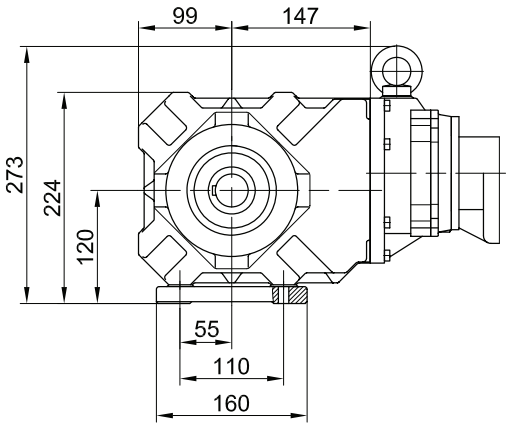

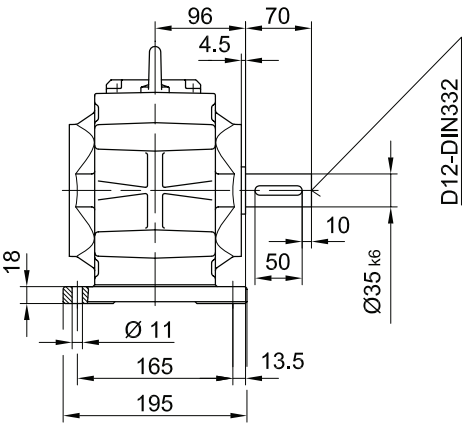

The actual gearbox design can vary from the geometry shown.

BK30G06

Flansch mit Durchgangslöchern vorne

Code -3.V/

(Code -2.V/)

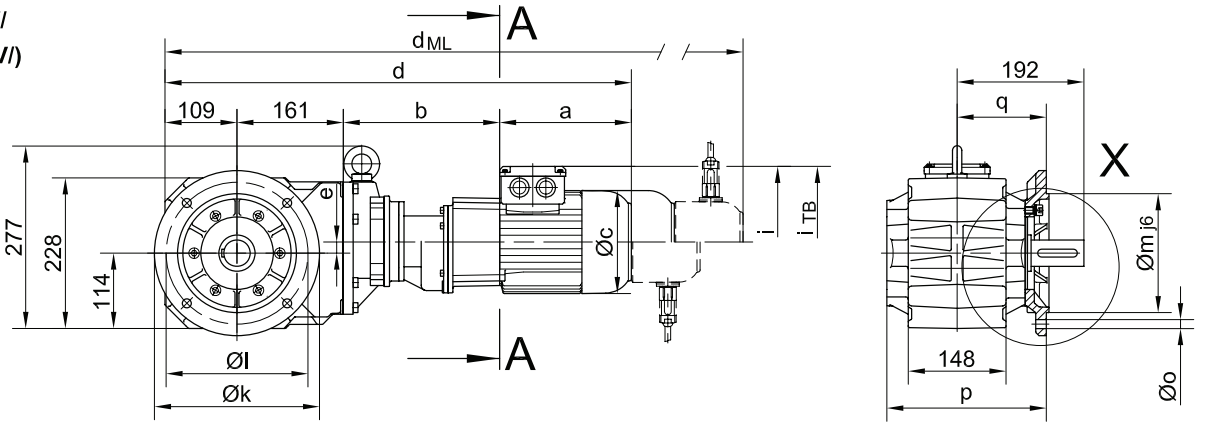

Code -.4/

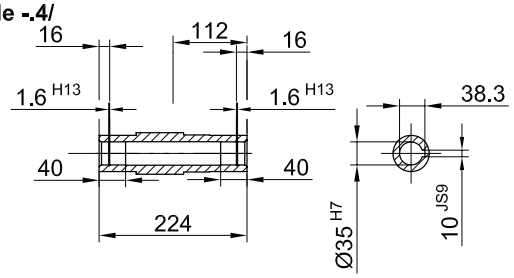

Code -.1/

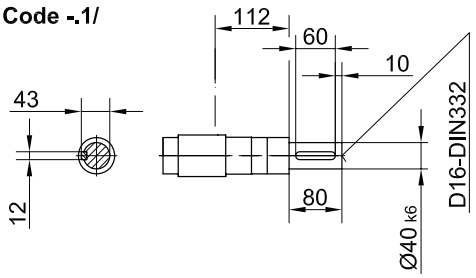

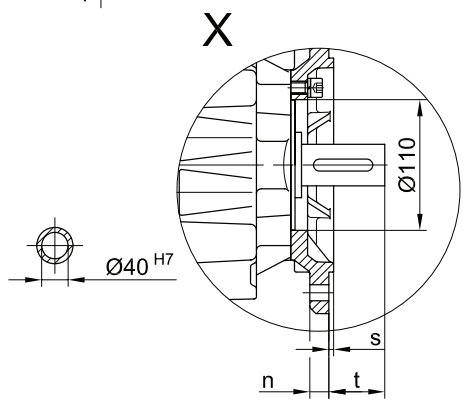

Code -.5/

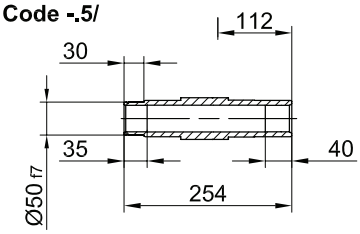

Code -.3/

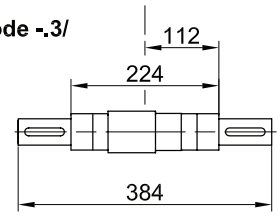

Standard

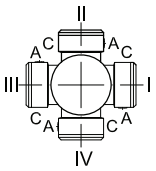

A-A

Flanschmasse

BK30G..	k	l	m	n	o	p	q	s	t
Standard -3.V/	250	215	180	16	13.5	242	135	4	57
klein -2.V/	200	165	130	12	11	239	132	3.5	60

Typ	a	b	c	d	e	i	Ausführung mit Motoranbauten				
							i_{TB}	ES../ZS..	G	ES../ZS..-G	RR/RL
								d_{ML}	d_{ML}	d_{ML}	d_{ML}
BK30G06-../D04..	143	191	111	604	17	90	124.5	647.5	666.5	710	-
BK30G06-../D05..	170	193	123	634	17	100	129.5	675	737	778	-
BK30G06-../D06..	170	193	123	634	17	100	131.5	675	737	778	-
BK30G06-../D07..	190	193	123	654	17	100	131.5	695	757	798	-
BK30G06-../D..08..	200	237	156	707	17	115	149.5	707	814	880	773

The actual gearbox design can vary from the geometry shown.

BK30G06

Drehmomentstütze vorne
Code -5.V/

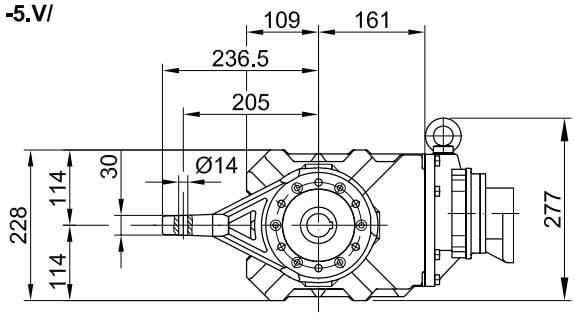

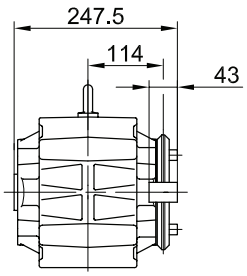

Flansch mit Gewindelöchern vorne
Code -7.V/

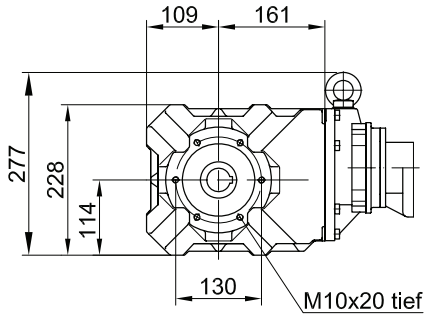

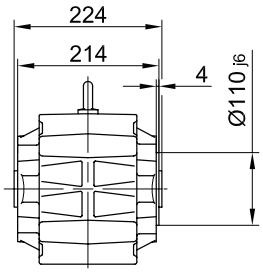

Fuss mit Gewindelöchern unten
Code -6.U/

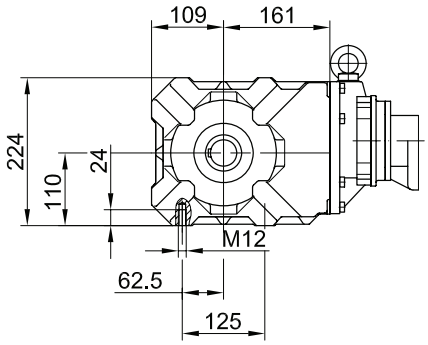

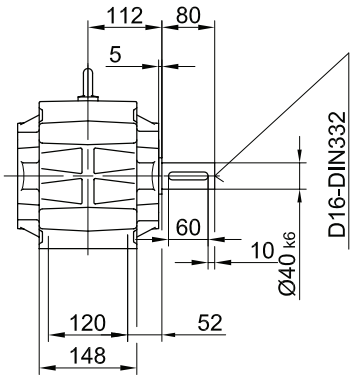

Fuss mit Durchgangslöchern unten
Code -1.U/

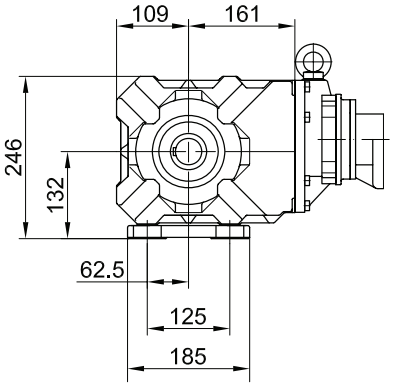

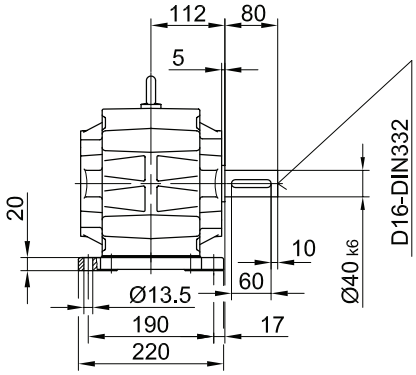

The actual gearbox design can vary from the geometry shown.

BK40G10

Flansch mit Durchgangslöchern vorne

Code -3.V/
(Code -4.V/)

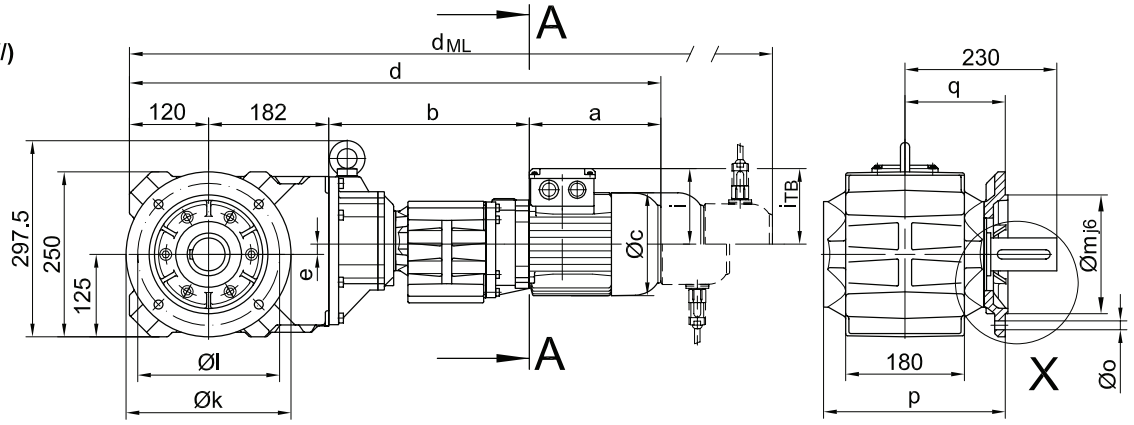

Code -.4/

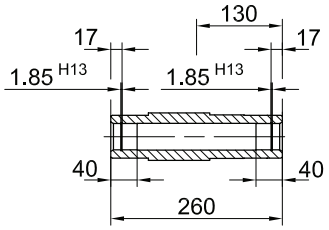

Code -.1/

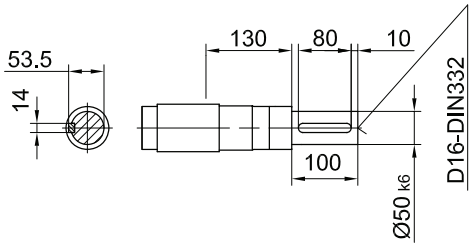

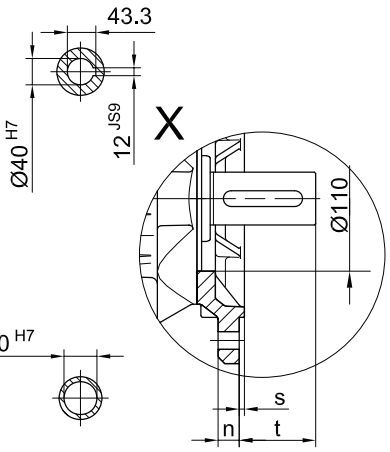

Code -.5/

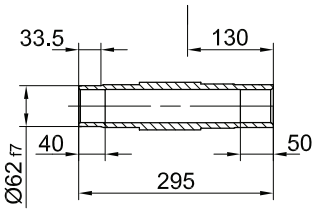

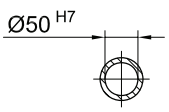

Code -.3/

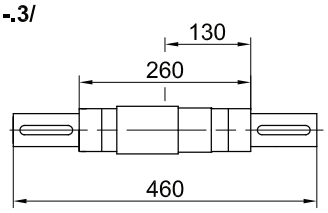

12

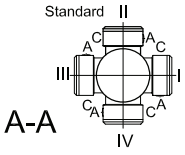

Flanschmasse

BK40G..	k	l	m	n	o	p	q	s	t
Standard -3.V/	250	215	180	16	13.5	276	152	4	78
gross -4.V/	300	265	230	20	13.5	282	158	4	72

Typ	a	b	c	d	e	i	Ausführung mit Motoranbauten				
							i_{TB}	ES../ZS..	G	ES../ZS..-G	RR/RL
								d_{ML}	d_{ML}	d_{ML}	d_{ML}
BK40G10-../D05..	170	300	123	773	15.5	100	129.5	814	876	917	-
BK40G10-../D06..	170	300	123	773	15.5	100	131.5	814	876	917	-
BK40G10-../D07..	190	300	123	793	15.5	100	131.5	834	896	937	-
BK40G10-../D..08..	200	304	156	806	15.5	115	149.5	872	913	979	872
BK40G10-../D..09..	251	318.5	181	872	15.5	124	164	859	979	1066	959

The actual gearbox design can vary from the geometry shown.

BK40G10

Drehmomentstütze vorne

Code -5.V/

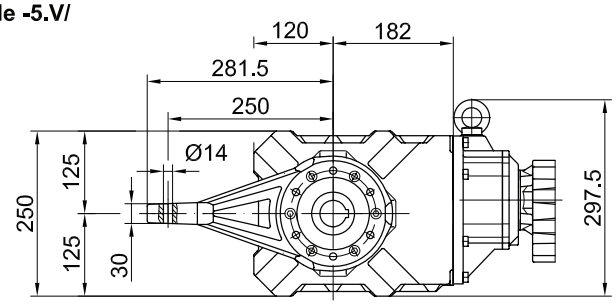

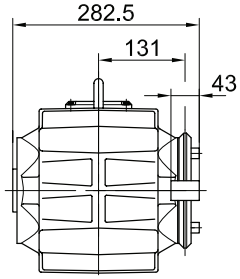

Flansch mit Gewindelöchern vorne

Code -7.V/

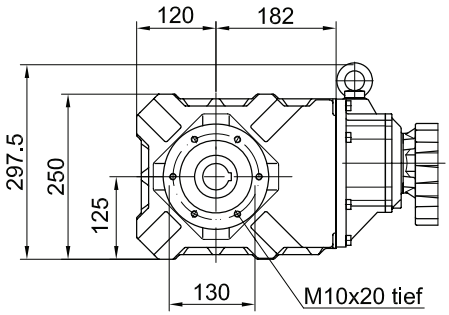

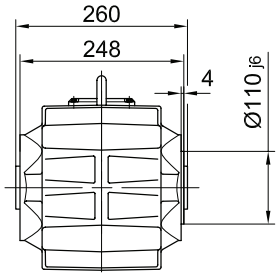

Fuss mit Gewindelöchern unten

Code -6.U/

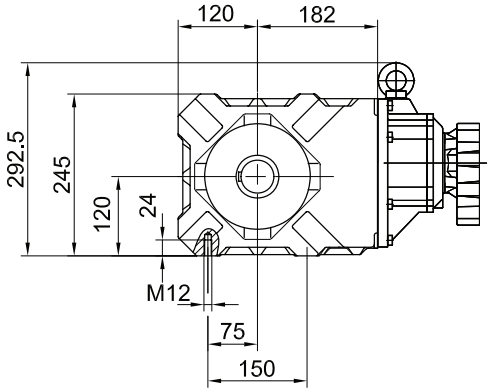

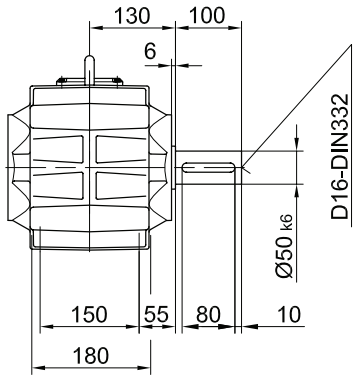

Fuss mit Durchgangslöchern unten

Code -1.U/

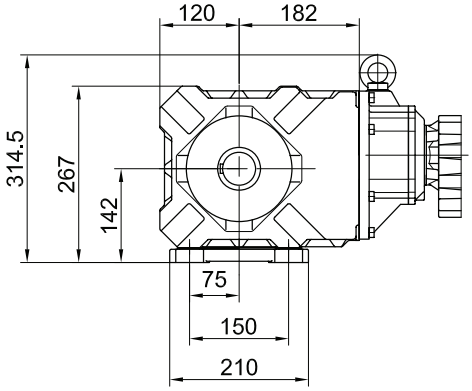

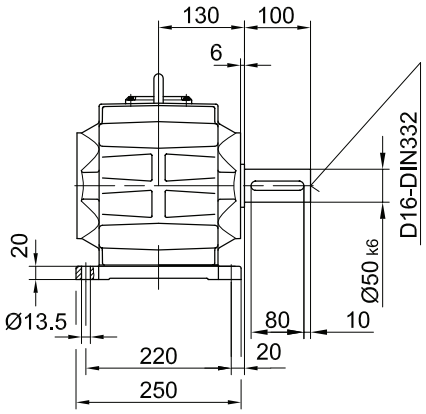

The actual gearbox design can vary from the geometry shown.

BK50G10

Flansch mit Durchgangslöchern vorne

Code -3.V/
(Code -2.V/)

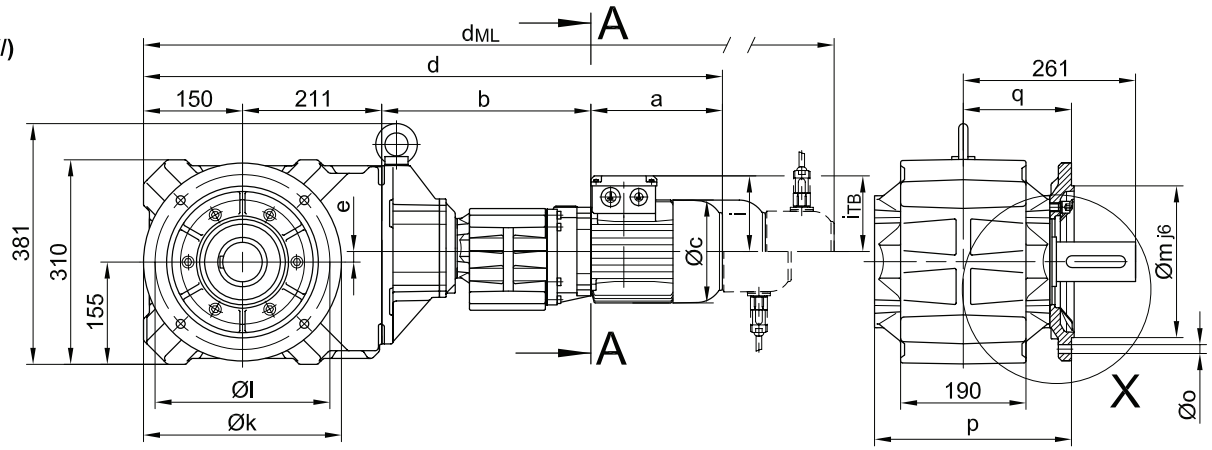

Code -.4/

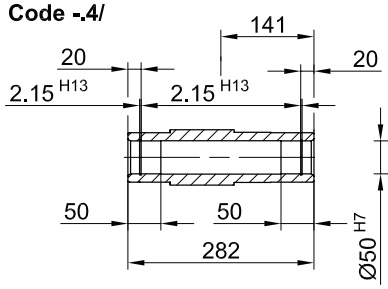

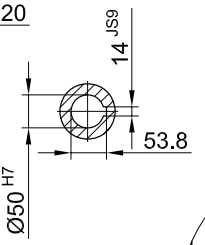

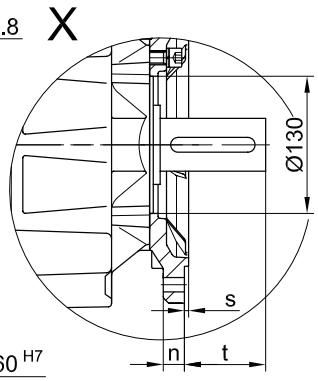

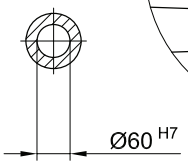

Code -.1/

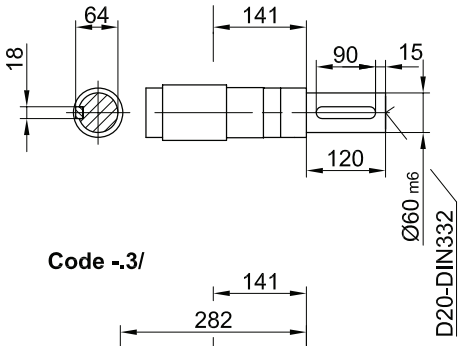

Code -.5/

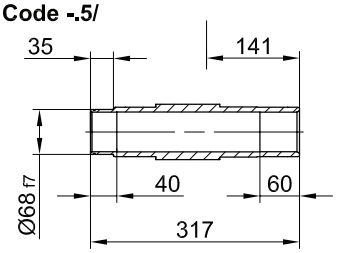

Code -.3/

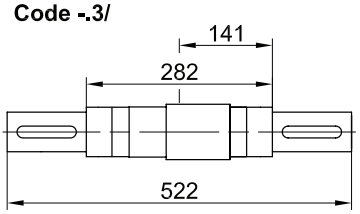

Flanschmasse

BK50G..	k	l	m	n	o	p	q	s	t
Standard -3.V/	300	265	230	20	13.5	298.5	164	4	97
klein -2.V/	250	215	180	16	13.5	296	161	4	100

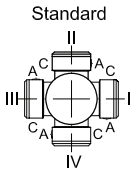

A-A

Typ	a	b	c	d	e	i	Ausführung mit Motoranbauten				
							i_{TB}	ES../ZS..	G	ES../ZS..-G	RL/RR
								d_{ML}	d_{ML}	d_{ML}	d_{ML}
BK50G10-../D05..	170	313	123	845	16	100	129.5	886	948	989	-
BK50G10-../D06..	170	313	123	845	16	100	131.5	886	948	989	-
BK50G10-../D07..	190	313	123	865	16	100	131.5	906	968	1009	-
BK50G10-../D..08..	200	317	156	878	16	115	149.5	944	985	1051	944
BK50G10-../D..09..	251	331.5	181	943	16	124	164	1030	1050	1137	1030

The actual gearbox design can vary from the geometry shown.

BK50G10

Drehmomentstütze vorne

Code -5.V/

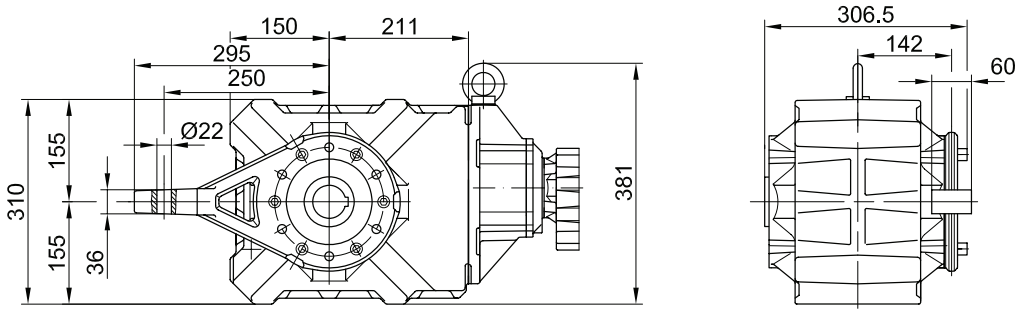

Flansch mit Gewindelöchern vorne

Code -7.V/

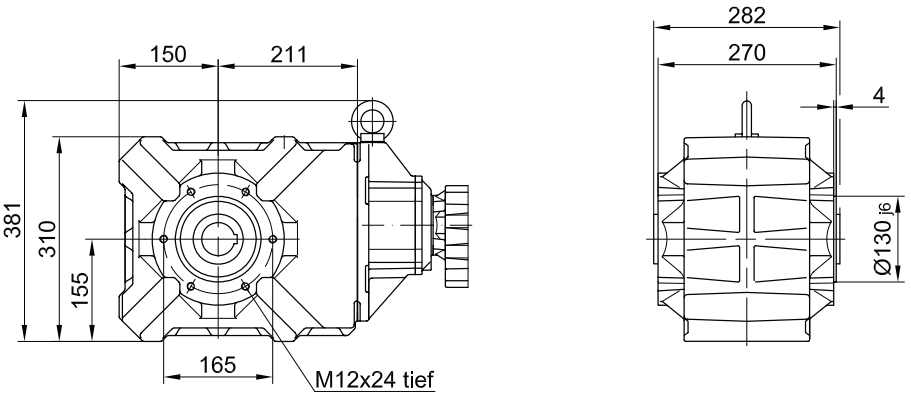

Fuss mit Gewindelöchern unten

Code -6.U/

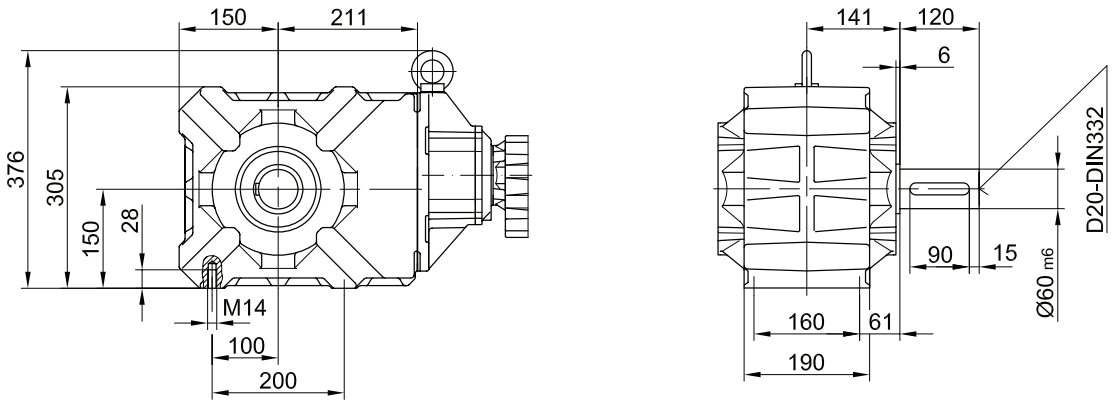

Fuss mit Durchgangslöchern unten

Code -1.U/

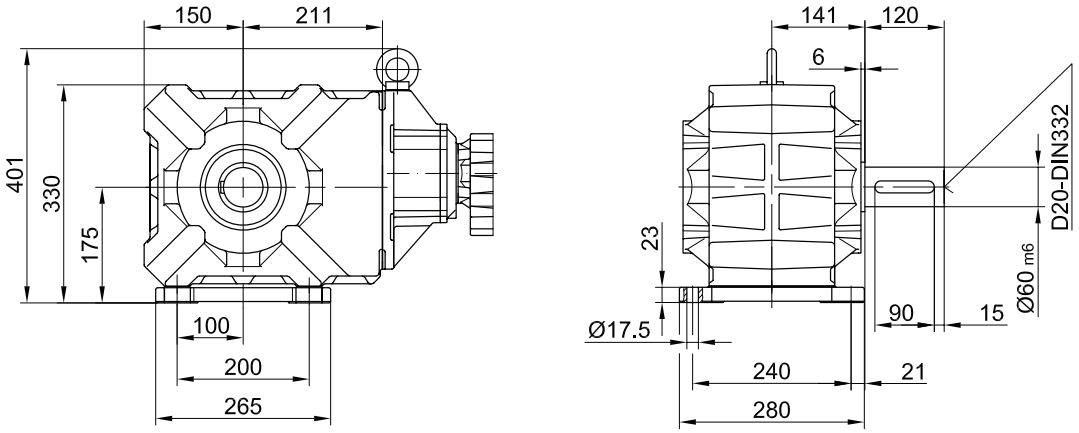

The actual gearbox design can vary from the geometry shown.

BK60G20

Flansch mit Durchgangslöchern vorne

Code -3.V/
(Code -2.V/)

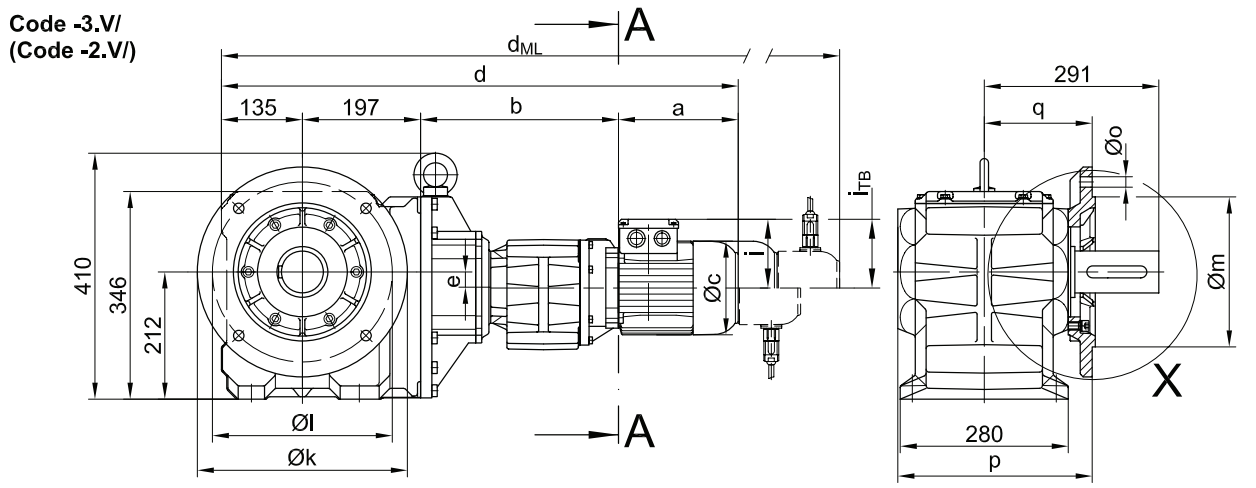

Code -.4/

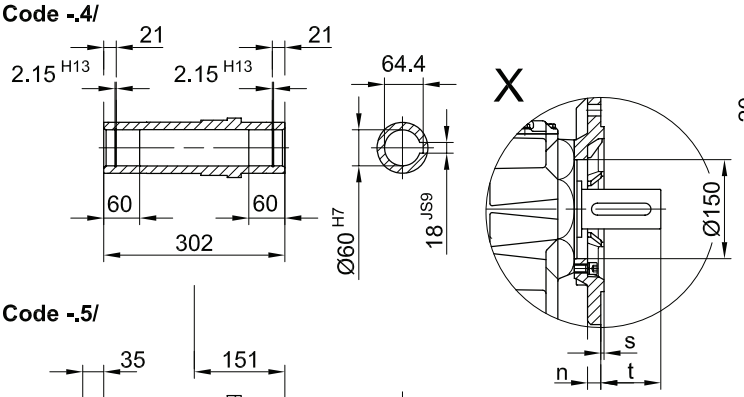

Code -.1/

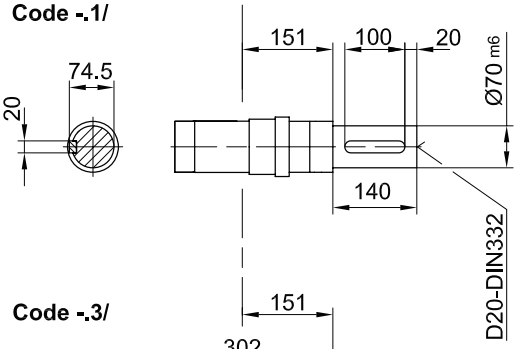

Code -.5/

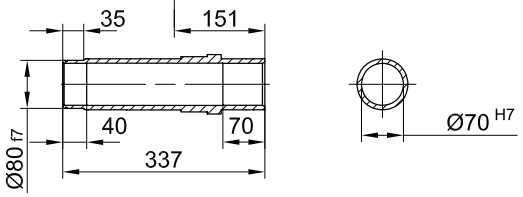

Code -.3/

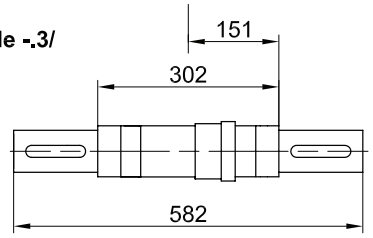

Flanschmasse

BK60G..	k	l	m	n	o	p	q	s	t
Standard -3.V/	350	300	250$_{h6}$	20	17.5	324	180	5	111
klein -2.V/	300	265	230$_{j6}$	20	13.5	332	188	4	103

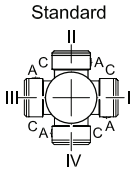

A-A

Typ	a	b	c	d	e	i	Ausführung mit Motoranbauten				
							i_{TB}	ES../ZS..	G	ES../ZS..-G	RR/RL
								d_{ML}	d_{ML}	d_{ML}	d_{ML}
BK60G20-../D05..	170	326	123	829	27	100	129.5	870	932	973	-
BK60G20-../D06..	170	326	123	829	27	100	131.5	870	932	973	-
BK60G20-../D07..	190	326	123	849	27	100	131.5	890	952	993	-
BK60G20-../D..08..	200	330	156	862	27	115	149.5	928	969	1035	928
BK60G20-../D..09..	251	344.5	181	927	27	124	164	1014	1034	1121	1014

The actual gearbox design can vary from the geometry shown.

BK60G20

Drehmomentstütze vorne

Code -5.V/

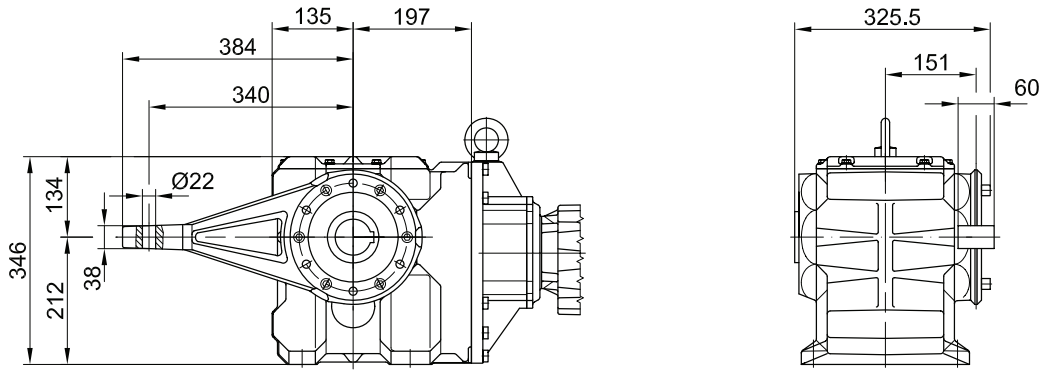

Flansch mit Gewindelöchern vorne

Code -7.V/

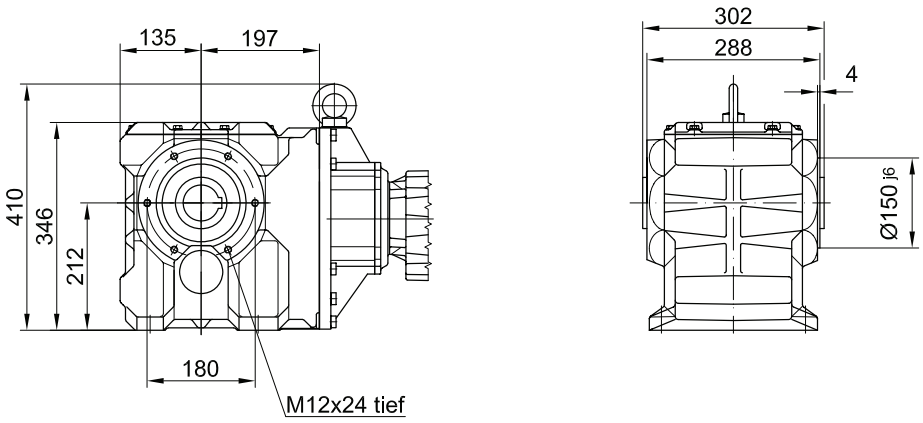

Fuss mit Durchgangslöchern unten

Code -1.U/

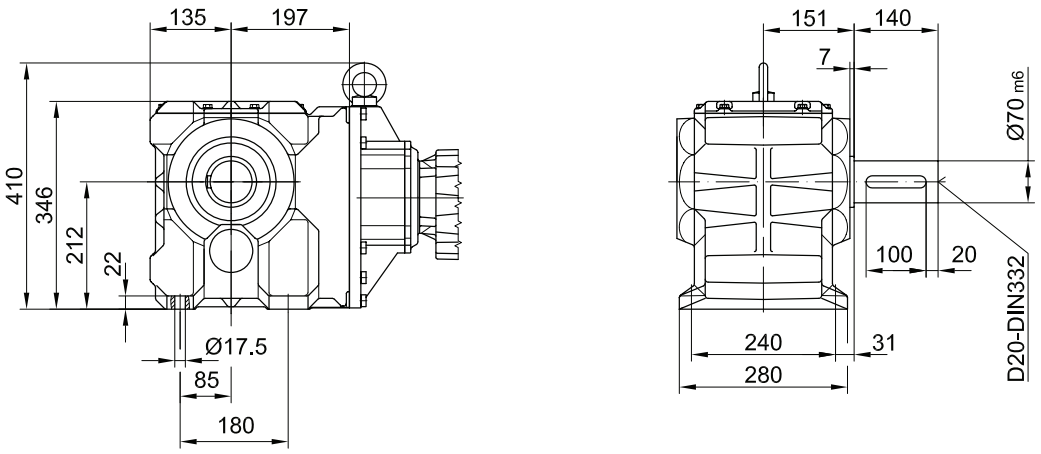

The actual gearbox design can vary from the geometry shown.

BK70G20

Flansch mit Durchgangslöchern vorne

Code -3.V/
(Code -2.V/)
(Code -4.V/)

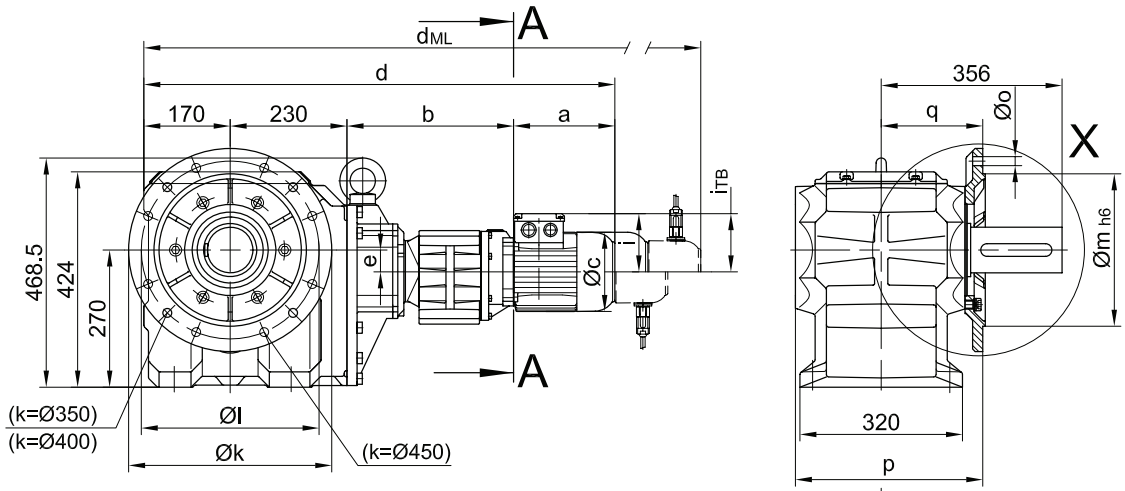

Code -.4/

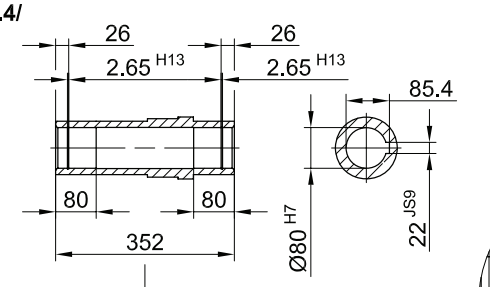

Code -.1/

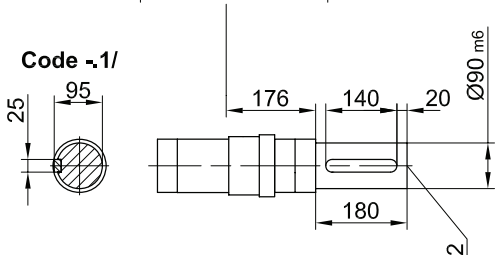

Code -.5/

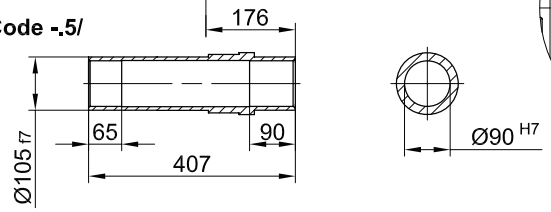

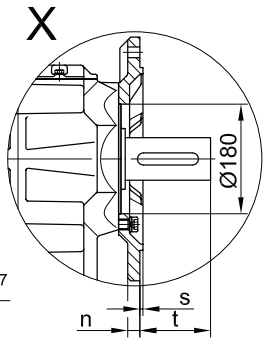

Code -.3/

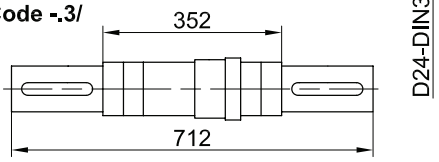

Code -.4/K70

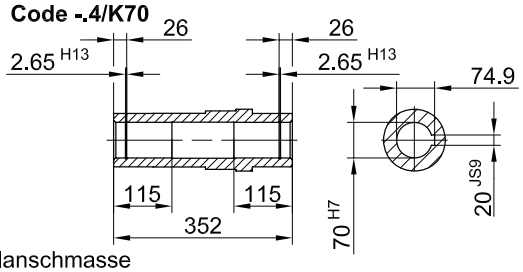

Flanschmasse

BK70G..	k	l	m	n	o	p	q	s	t
Standard -3.V/	400	350	300	20	4 x 17.5	369	200	5	156
klein -2.V/	350	300	250	20	4 x 17.5	369	200	5	156
gross -4.V/	450	400	350	22	8 x 17.5	379	210	5	146

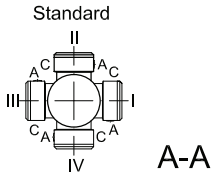

A-A

Typ	a	b	c	d	e	i	Ausführung mit Motoranbauten				
							i_{TB}	ES../ZS..	G	ES../ZS..-G	RR/RL
								d_{ML}	d_{ML}	d_{ML}	d_{ML}
BK70G20-../D05..	170	324	123	895	43	100	129.5	936	998	1039	-
BK70G20-../D06..	170	324	123	895	43	100	131.5	936	998	1039	-
BK70G20-../D07..	190	324	123	915	43	100	131.5	956	1018	1059	-
BK70G20-../D..08..	200	328	156	928	43	115	149.5	994	1035	1101	994
BK70G20-../D..09..	251	342.5	181	994	43	124	164	1081	1101	1188	1081

The actual gearbox design can vary from the geometry shown.

BK70G20

Drehmomentstütze vorne

Code -5.V/

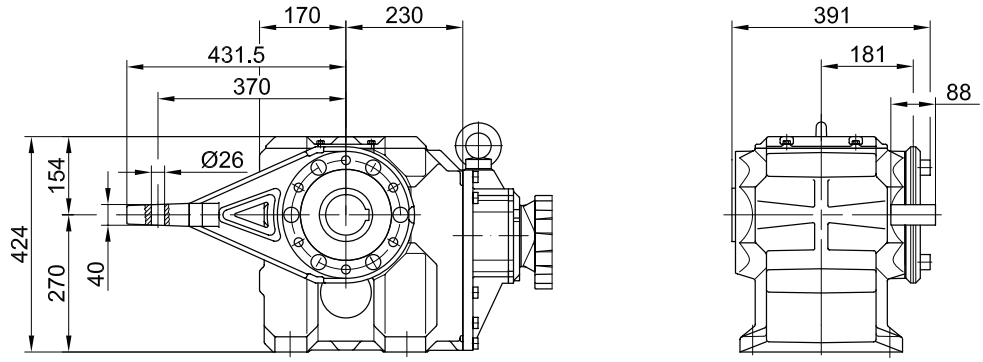

Flansch mit Gewindelöchern vorne

Code -7.V/

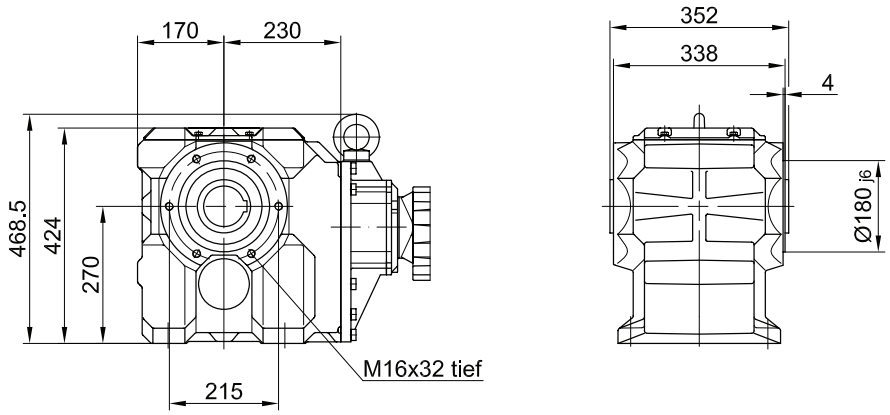

Fuss mit Durchgangslöchern unten

Code -1.U/

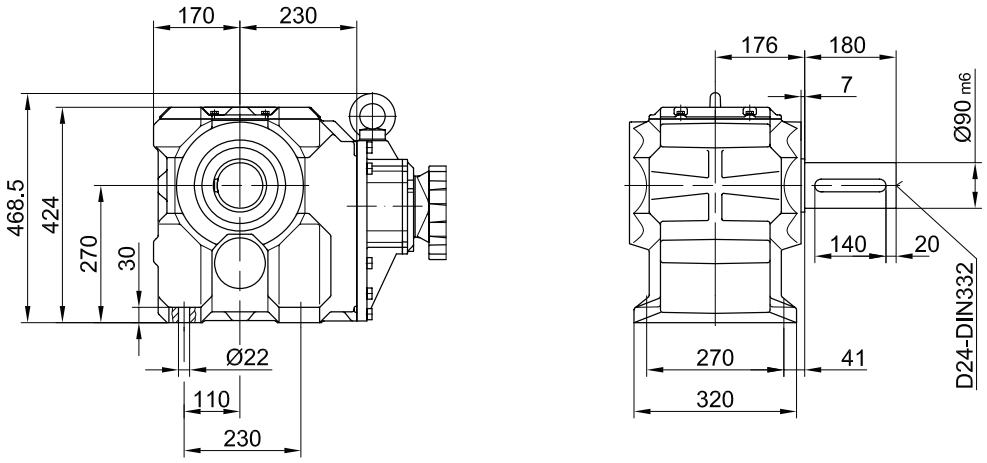

The actual gearbox design can vary from the geometry shown.

BK80G40

Flansch mit Durchgangslöchern vorne

Code -3.V/
(Code -4.V/)

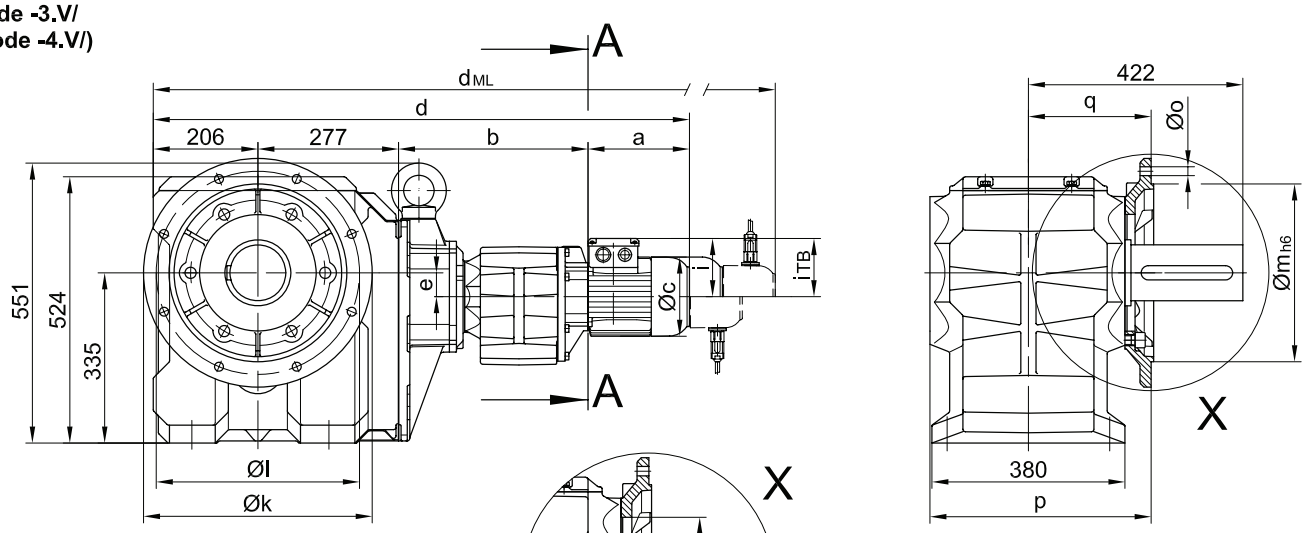

Code -.4/

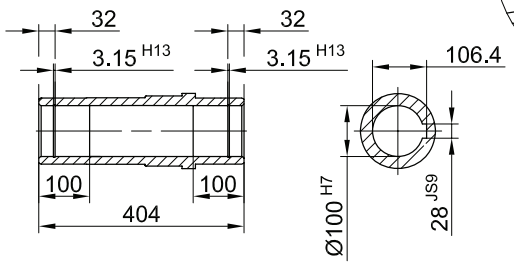

Code -.1/

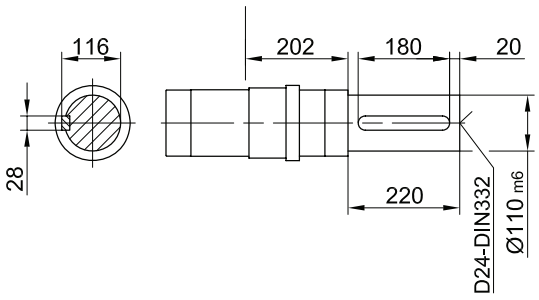

Code -.5/

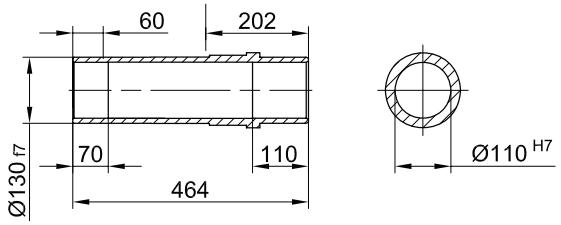

Code -.3/

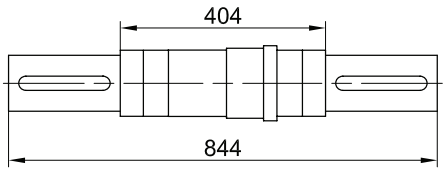

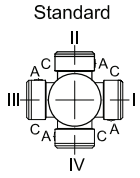

Flanschmasse

BK80G..	k	l	m	n	o	p	q	s	t
Standard -3.V/	450	400	350	22	17.5	439	245	5	177
gross -4.V/	550	500	450	22	17.5	444	250	5	172

Typ	a	b	c	d	e	i	Ausführung mit Motoranbauten				
							i_{TB}	ES../ZS..	G	ES../ZS..-G	RR/RL
								d_{ML}	d_{ML}	d_{ML}	d_{ML}
BK80G40-../D..08..	200	373	156	1056	47	115	149.5	1122	1163	1229	1122
BK80G40-../D..09..	251	387.5	181	1121	47	124	164	1208	1228	1315	1208
BK80G40-../D..11..	319	394	228	1196	47	181	181	1292	1303	1399	1292

The actual gearbox design can vary from the geometry shown.

BK80G40

Drehmomentstütze vorne
Code -5.V/

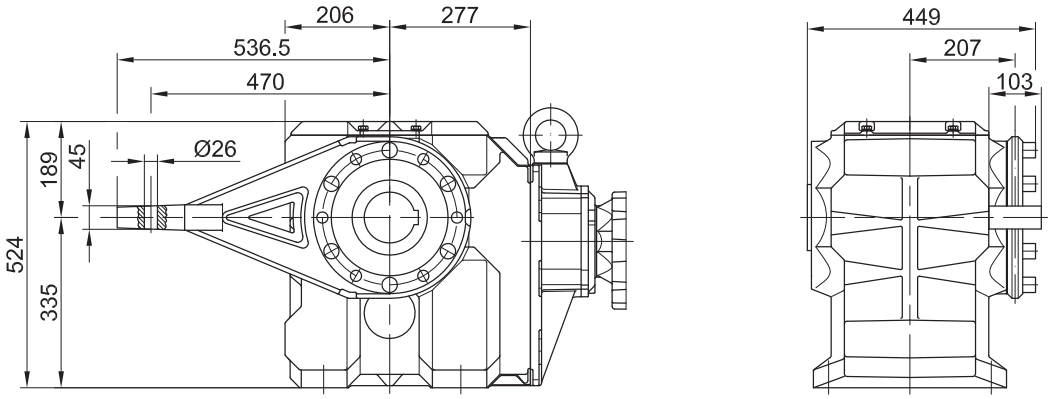

Flansch mit Gewindelöchern vorne
Code -7.V/

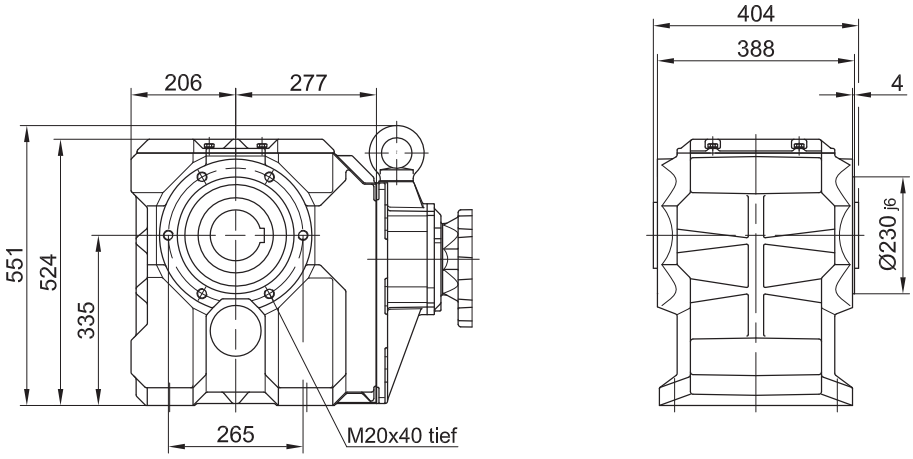

Fuss mit Durchgangslöchern unten
Code -1.U/

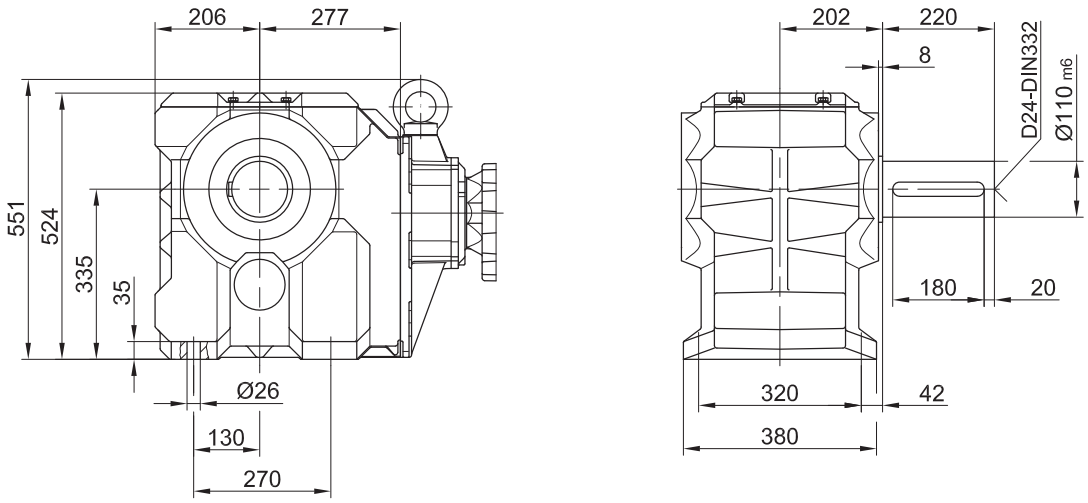

The actual gearbox design can vary from the geometry shown.

BK90G50

Flansch mit Durchgangslöchern vorne

Code -3.V/
(Code -4.V/)

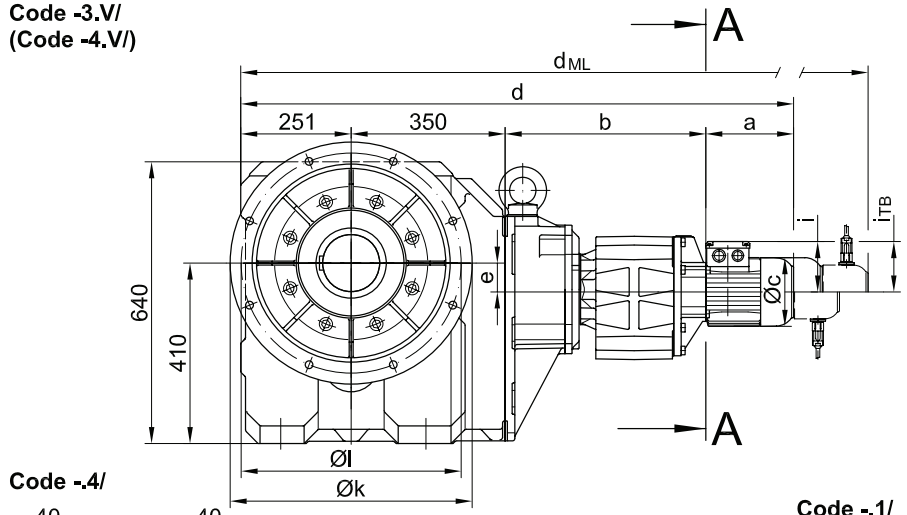

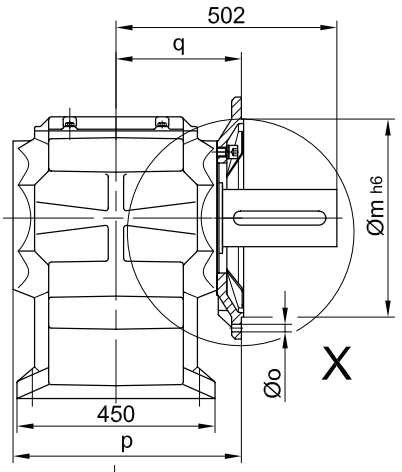

Code -.4/

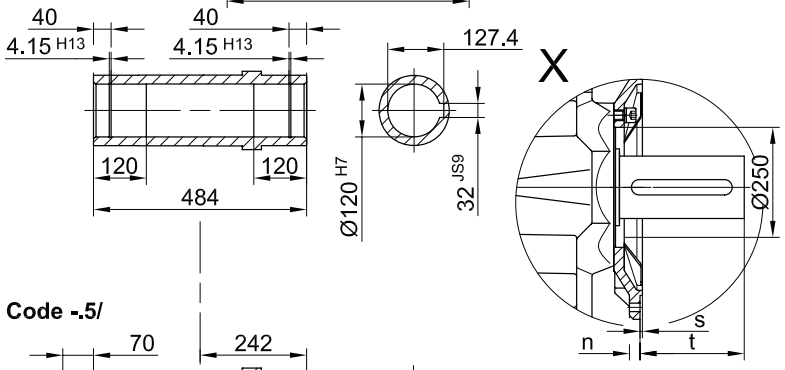

Code -.1/

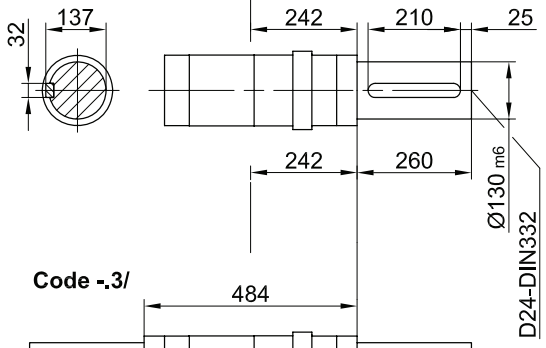

Code -.5/

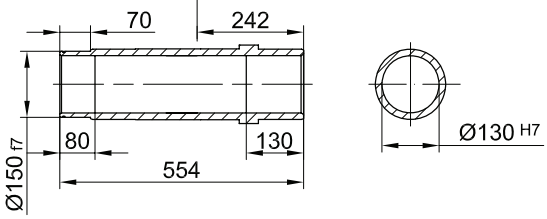

Code -.3/

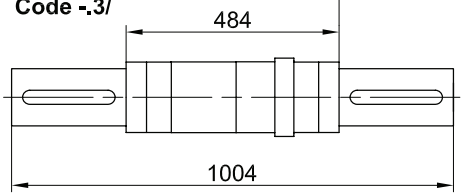

Standard

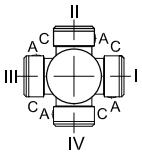

A-A

Flanschmasse

BK90G..	k	l	m	n	o	p	q	s	t
Standard -3.V/	550	500	450	22	17.5	519	285	5	217
gross -4.V/	660	600	550	25	22	513	279	6	223

Typ	a	b	c	d	e	i	i_{TB}	Ausführung mit Motoranbauten			
								ES../ZS..	G	ES../ZS..-G	RR/RL
								d_{ML}	d_{ML}	d_{ML}	d_{ML}
BK90G50-../D..08..	200	456	156	1257	66	115	149.5	1323	1364	1400	1323
BK90G50-../D..09..	251	470.5	181	1322	66	124	164	1409	1399	1516	1409
BK90G50-../D..11..	319	477	228	1397	66	181	181	1493	1504	1600	1493
BK90G50-../D..13..	393	490	266	1484	66	217	217	1592	1591	1699	1592
BK90G50-../D..16..	429	504	322	1534	66	243	243	1678	1642	1786	1678

The actual gearbox design can vary from the geometry shown.

BK90G50

Drehmomentstütze vorne

Code -5.V/

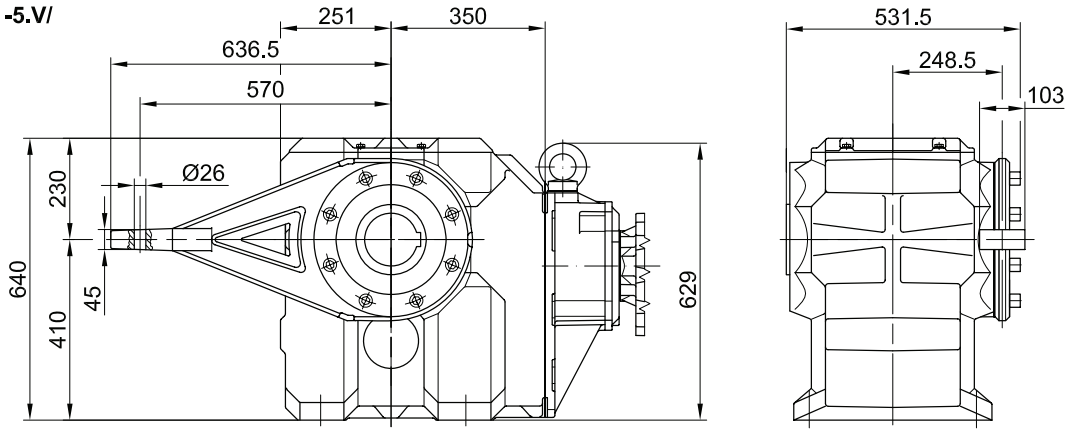

Flansch mit Gewindelöchern vorne

Code -7.V/

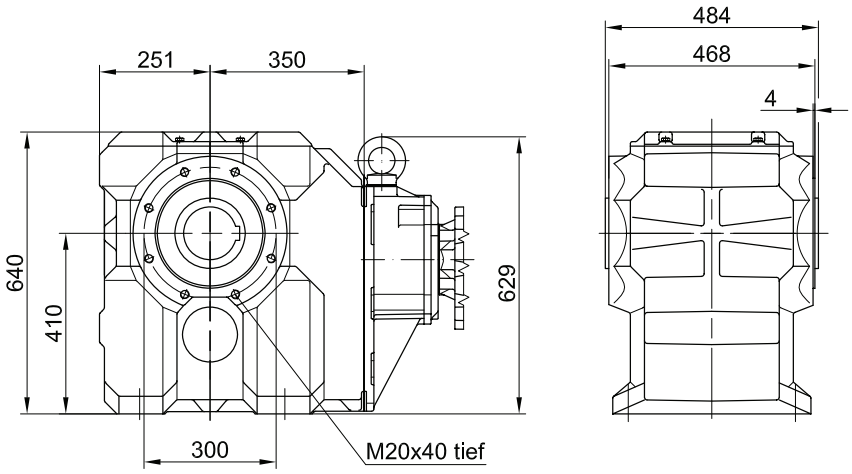

Fuss mit Durchgangslöchern unten

Code -1.U/

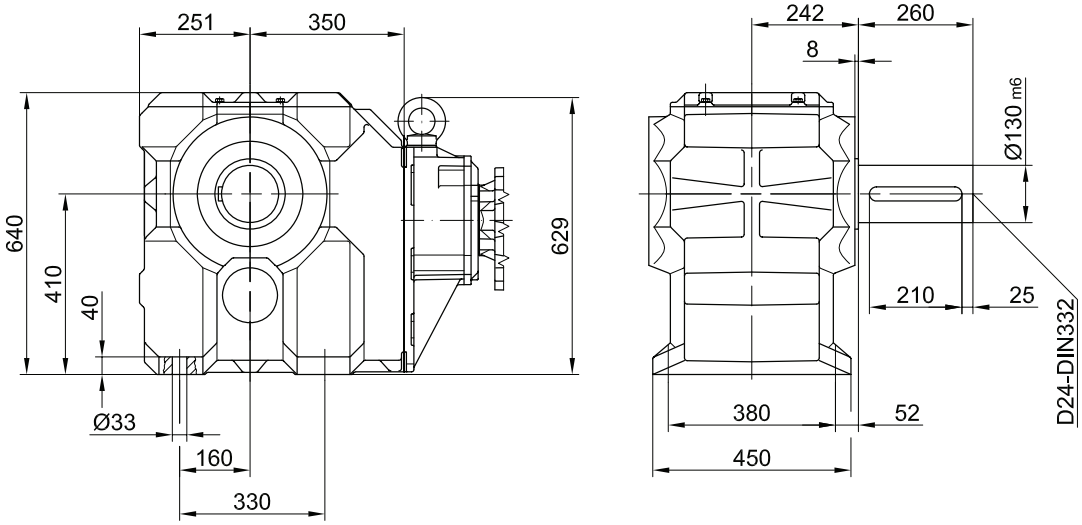

The actual gearbox design can vary from the geometry shown.

Shrink disc couplings (SSV)

(Code BK10-.5/...)
(Code BK10Z-.5/...)

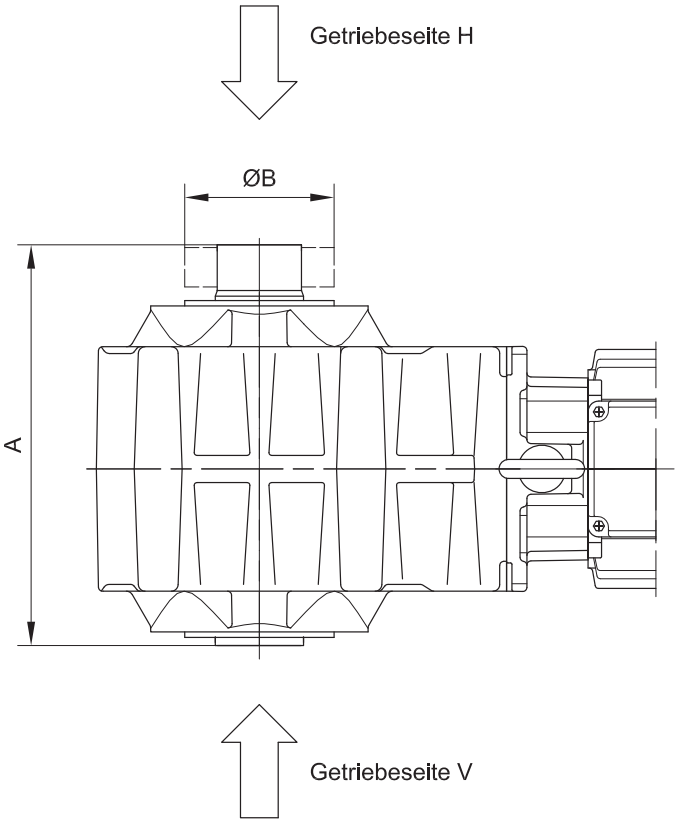

Typ	SSV Ringfeder	SSV STÜWE	A	B
BK06	RfN 4161 024x050	HSD 24-22x24	118	50
BK10	RfN 4161 036x072	HSD 36-22x36	195	72
BK20	RfN 4161 044x080	HSD 44-22x44	222	80
BK30	RfN 4161 050x090	HSD 50-22x50	254	90
BK40	RfN 4161 062x110	HSD 62-22x62	295	110
BK50	RfN 4161 068x115	HSD 68-22x68	317	115
BK60	RfN 4161 080x141	HSD 80-22x80	337	140
BK70	RfN 4161 105x185	HSD 110-22x105	407	185
BK80	RfN 4161 130x215	HSD 125-22x130	464	215
BK90	RfN 4161 150x263	HSD 155-22x150	554	263

The actual gearbox design can vary from the geometry shown.

Shrink Disk Connection with Cover (SSV)

(Code BK10-.5A/...)
(Code BK10Z-.5A/...)

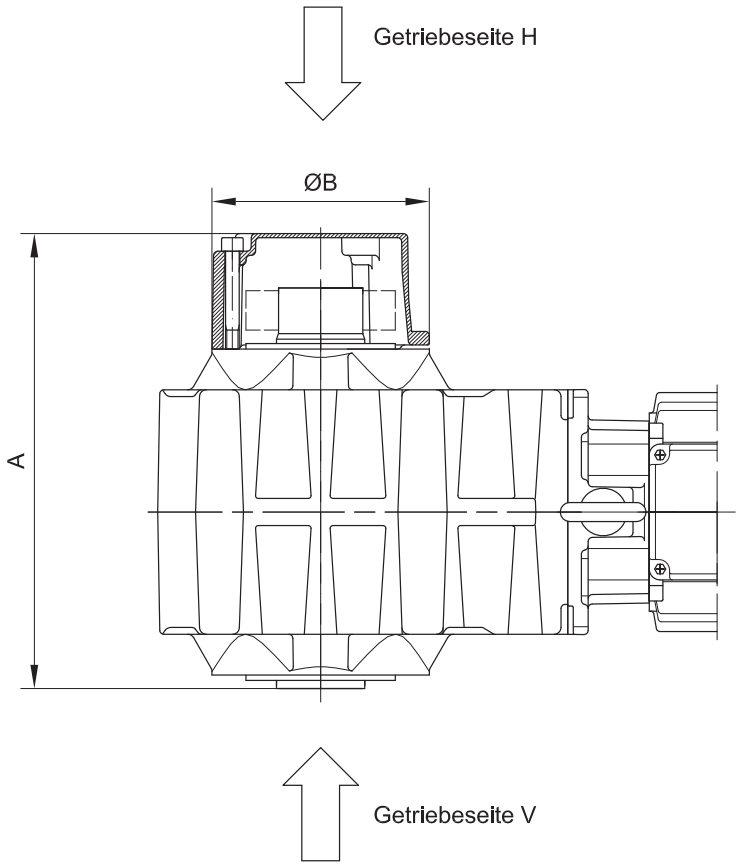

Typ	SSV Ringfeder	SSV STÜWE	A	B
BK10	RfN 4161 036x072	HSD 36-22x36	217	120
BK20	RfN 4161 044x080	HSD 44-22x44	270	140
BK30	RfN 4161 050x090	HSD 50-22x50	300	160
BK40	RfN 4161 062x110	HSD 62-22x62	335	160
BK50	RfN 4161 068x115	HSD 68-22x68	329	200
BK60	RfN 4161 080x141	HSD 80-22x80	386	210
BK70	RfN 4161 105x185	HSD 110-22x105	465	250
BK80	RfN 4161 130x215	HSD 125-22x130	502	300
BK90	RfN 4161 150x263	HSD 155-22x150	602	350

The actual gearbox design can vary from the geometry shown.

Rubber buffer for torque restraint

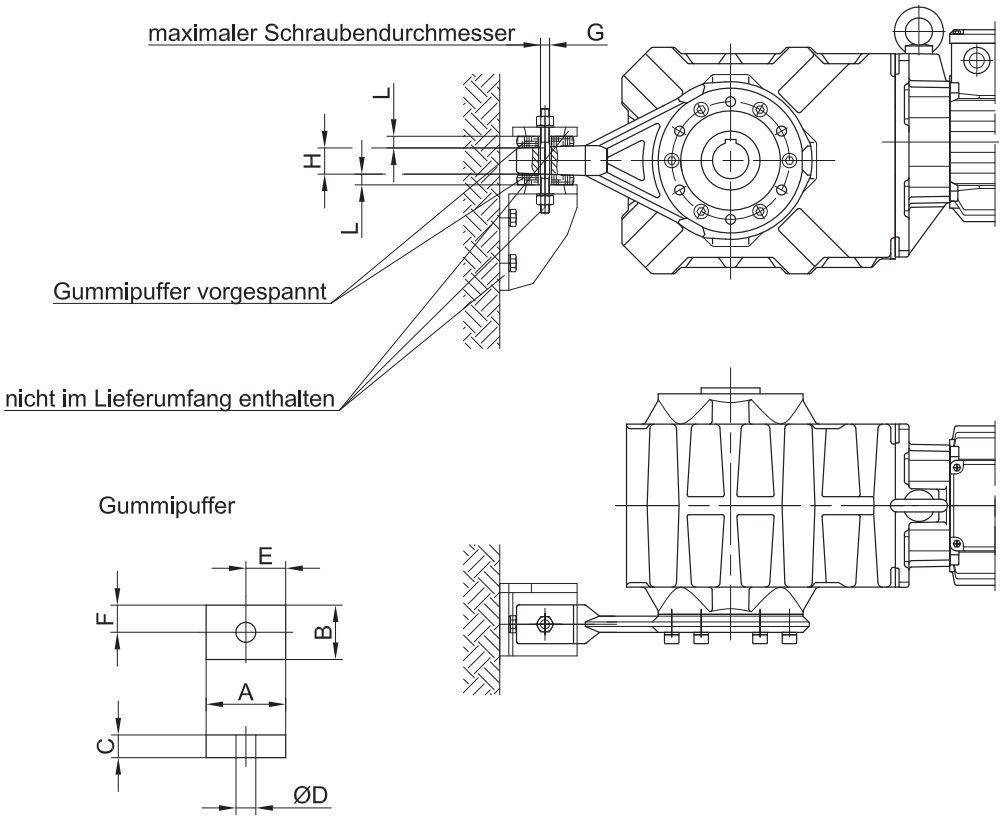

Werkstoff: Naturkautschuk
Härte 50±5 Shore A

Abmessungen des Querlochs:
Siehe Maßbild des jeweiligen Getriebes

12

Getriebe	Pos.	Maße (mm)								
		A	B	C	D	E	F	G	H	L
BK06	Pos.0	30	30	12	12	15	15	M10	10	10
BK10	Pos.1	48	32	15	14	24	16	M10	19	13.5
BK20	Pos.1	48	32	15	14	24	16	M10	19	13
BK30	Pos.2	63	43	20	14	31.5	21.5	M10	30	17
BK40	Pos.2	63	43	20	14	31.5	21.5	M10	30	17
BK50	Pos.3	88	60	25	22	44	30	M18	36	21.5
BK60	Pos.3	88	60	25	22	44	30	M18	38	21
BK70	Pos.4	123	88	30	26	61.5	44	M20	40	25.5
BK80	Pos.5	133	103	35	26	66.5	51.5	M20	45	30
BK90	Pos.5	133	103	35	26	66.5	51.5	M20	45	29.5

The actual gearbox design can vary from the geometry shown.

Posittion of the torque arm

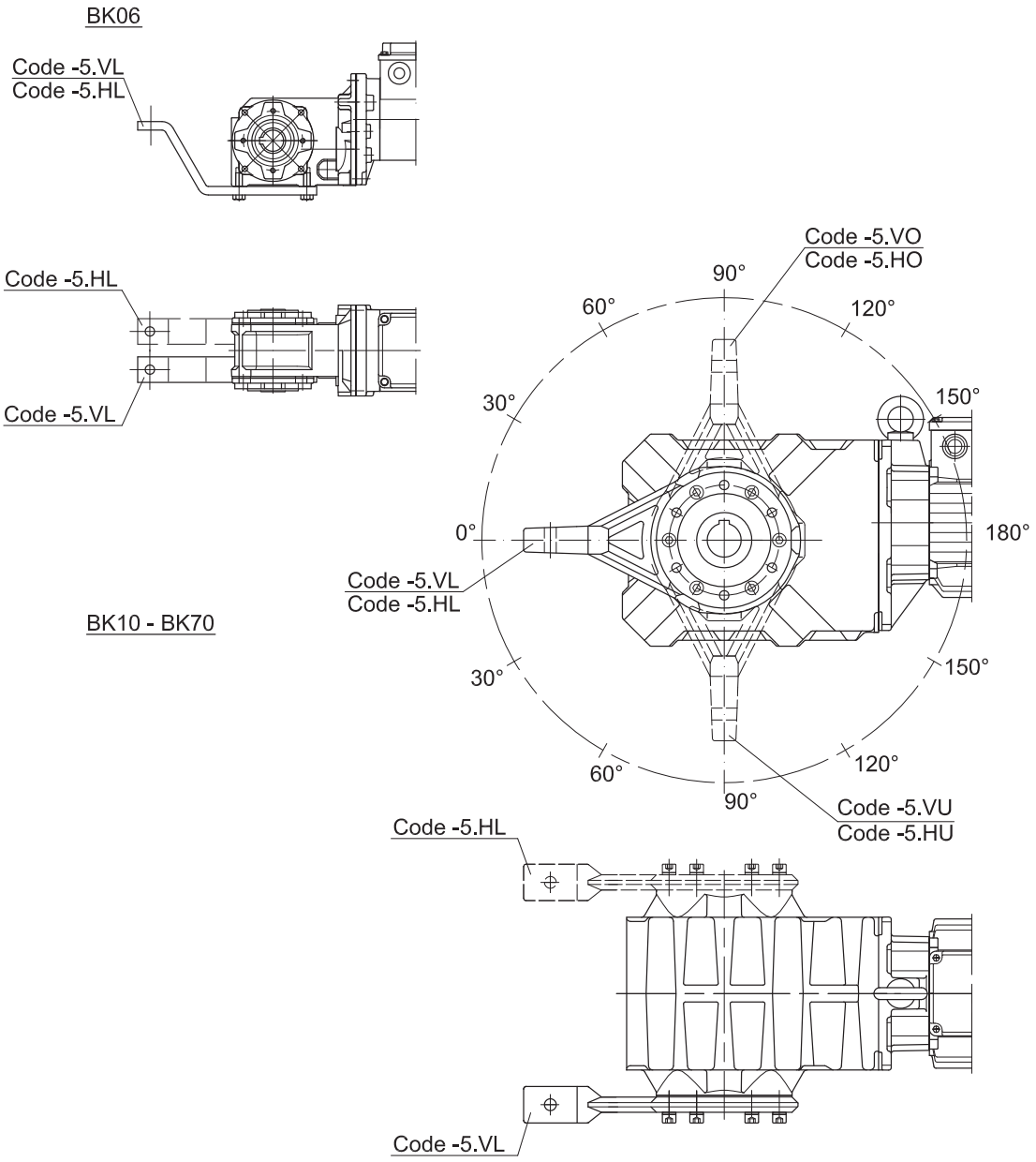

Mögliche Lagen.

Lage	VL / HL			VO / HO VU / HU			VR / HR
BK06	0°	-	-	-	-	-	-
BK10	0°	30°	60°	90°	120°	150°	-
BK20	0°	30°	60°	90°	120°	150°	-
BK30	0°	30°	60°	90°	120°	150°	-
BK40	0°	30°	60°	90°	120°	150°	-
BK50	0°	30°	60°	90°	120°	150°	-
BK60	0°	30°	60°	90°	120°	150°	-
BK70	0°	30°	60°	90°	120°	150°	-
BK80	0°	30°	60°	90°	120°	150°	-
BK90	0°	45°		90°	135°		-

The actual gearbox design can vary from the geometry shown.

Foot with tapped bores

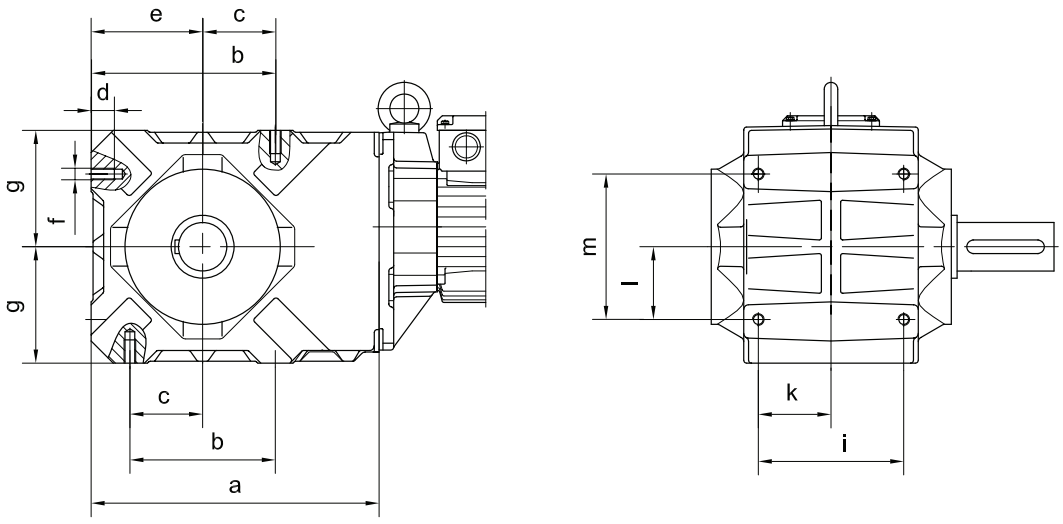

Typ	a	b	c	d	e	f	g	i	k	l	m
BK10-BK10Z	202	90	45	16	78	M8	80	95	47.5	45	90
BK20-BK20Z	242	110	55	20	95	M10	100	105	52.5	55	110
BK30-BK30Z	266	125	62.5	24	105	M12	110	120	60	62.5	125
BK40-BK40Z	297	150	75	24	115	M12	120	150	75	75	150
BK50-BK50Z	356	200	100	28	145	M14	150	160	80	100	200

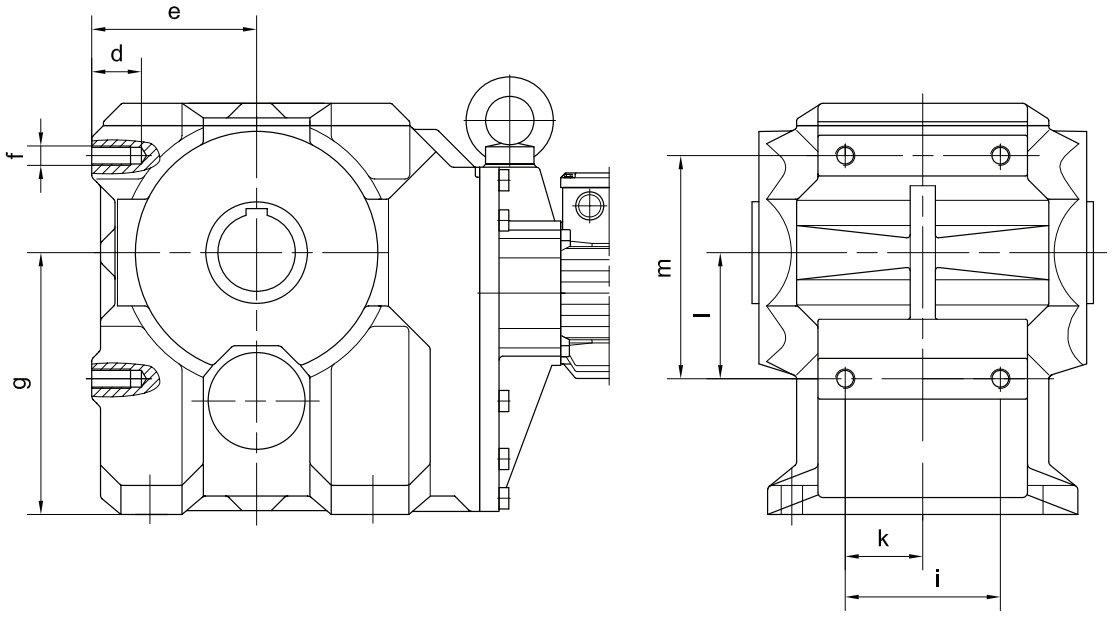

Typ	a	b	c	d	e	f	g	i	k	l	m
BK60-BK60Z	-	-	-	40	130	M20	212	160	80	145	230
BK70-BK70Z	-	-	-	40	165	M20	270	160	80	130	230
BK80-BK80Z	-	-	-	60	200	M30	335	210	105	240	360
BK90-BK90Z	-	-	-	60	245	M30	410	210	105	215	360

The actual gearbox design can vary from the geometry shown.

Foot plate with through bores

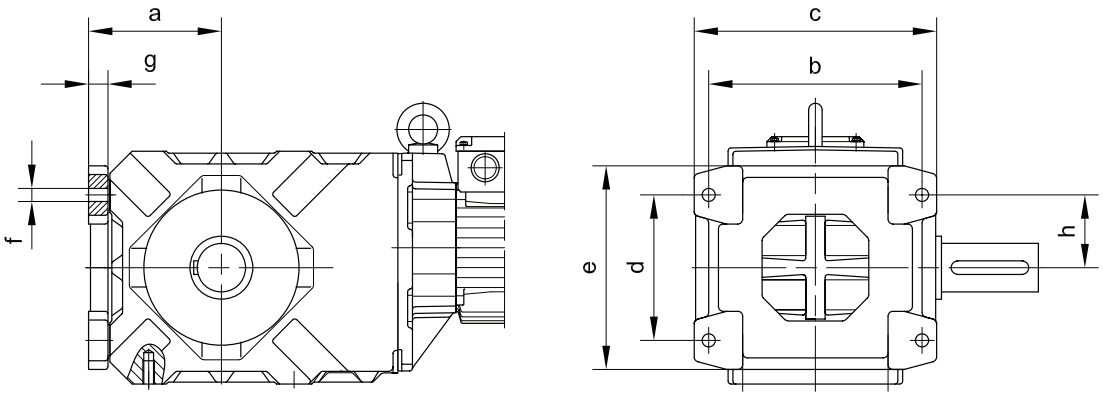

Typ	a	b	c	d	e	f	g	h
BK10-BK10Z	96	145	165	90	130	Ø9	16	45
BK20-BK20Z	115	165	195	110	160	Ø11	18	55
BK30-BK30Z	127	190	220	125	185	Ø13.5	20	62.5
BK40-BK40Z	137	220	250	150	210	Ø13.5	20	75
BK50-BK50Z	170	240	280	200	265	Ø17.5	23	100

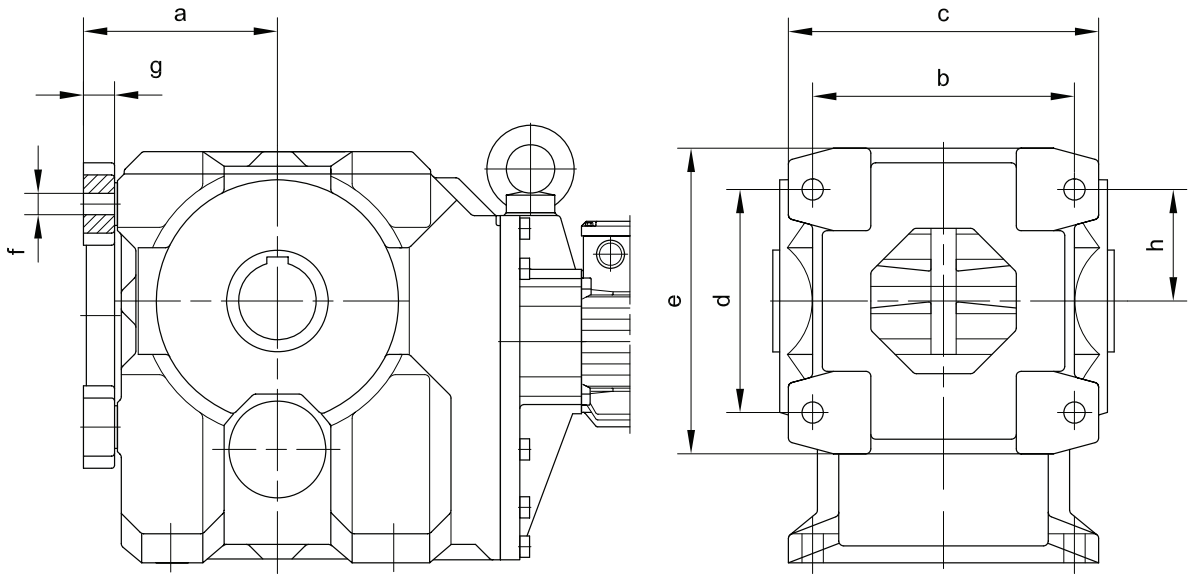

Typ	a	b	c	d	e	f	g	h
BK60-BK60Z	165	270	320	230	315	Ø22	32	85
BK70-BK70Z	200	270	320	230	315	Ø22	32	100
BK80-BK80Z	250	400	480	360	480	Ø33	47	120
BK90-BK90Z	295	400	480	360	480	Ø33	47	145

The actual gearbox design can vary from the geometry shown.

Tools for hollow shaft and keyway

Pos.1 Wellenzapfen

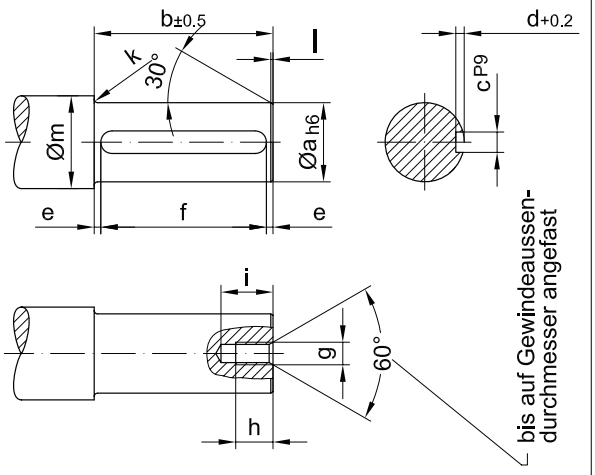

✳Pos.2 Scheibe

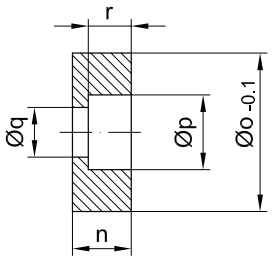

$\sqrt{}^{x}$, Kanten gebrochen
Werkstoff:
C45 DIN 17200

Typ	Masse (mm)																
	Pos.1 Wellenzapfen												Pos.2 Scheibe				
	a	b	c	d	e	f	g	h	i	k	l	m	n	o	p	q	r
BK06	20	75	6	3.5	6	$63^{+0.3}$	M6	16	20	2	1	28	13.5	19.8	11	6.6	6.5
BK10	25	148	8	4	11.5	$125^{+0.5}$	M8	18	24	2.5	1.5	33	13.5	24.8	15	9	8.5
BK20	30	170	8	4	15	$140^{+0.5}$	M10	20	26	3	1.5	38	15	29.8	18	11	10
BK30	35	201	10	5	10.5	$180^{+0.5}$	M10	20	26	3	1.5	43	16	34.8	18	11	10
BK40	40	235	12	5	17.5	$200^{+0.5}$	M12	22	29	3	2	48	18	39.8	20	13.5	12
BK50	50	254	14	5.5	17	$220^{+0.5}$	M16	30	37	3.5	2	58	21	49.8	26	17.5	15
BK60	60	273	18	7	11.5	$250^{+0.5}$	M20	38	46	3.5	2	68	24	59.8	33	22	18
BK70	80	316	22	9	18	$280^{+0.5}$	M20	38	46	4	2	90	27	79.8	33	22	20
BK70-K70	70	316	20	7.5	18	$280^{+0.5}$	M20	38	46	4	2	90	27	69.8	33	22	20
BK80	100	360	28	10	20	$320^{+0.5}$	M24	45	54	4	3	110	32	99.8	40	26	25
BK90	120	432	32	11	16	$400^{+0.5}$	M24	45	54	4.5	3	130	35	119.8	40	26	28

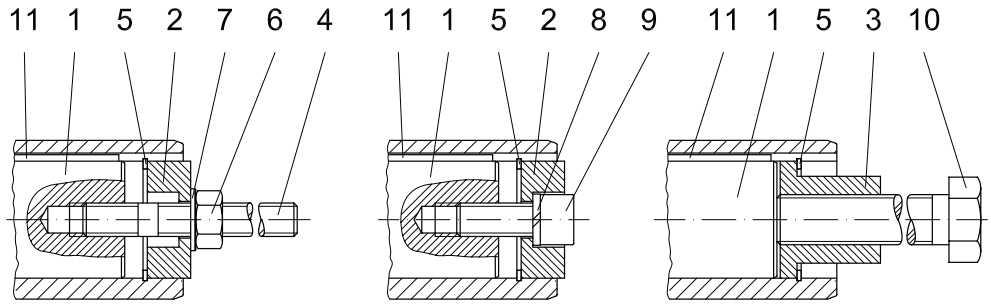

Montage Halten Demontage

Die dargestellten Teile werden zur Montage benötigt. NUR ✳gekennzeichneten Teile sind im Montagehilfeset enthalten.

The actual gearbox design can vary from the geometry shown.

Tools for hollow shaft and keyway

Pos.3 Hülse

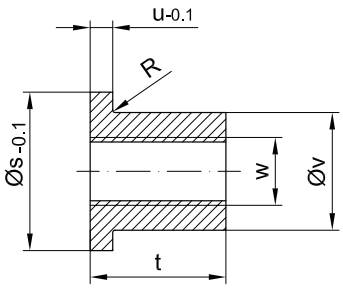

Pos.4 Gewindebolzen

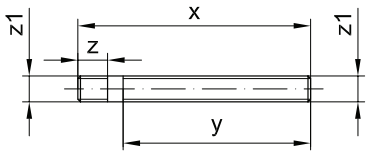

Werkstoff: Stahl, Zugfestigkeit ≥ 1000N/mm²
Gewinde gerollt

$\sqrt{}^{x}$, Kanten gebrochen
Werkstoff: C45 DIN 17200

Typ	Masse (mm)										✳ Sicherungsring DIN 472	Sechskantmutter DIN 934-8	Scheibe DIN 125-St	Federring DIN 7980	✳ Zylinderschraube DIN 912-8.8	Sechskantschraube DIN EN 24017-8.8	Passfeder DIN 6885 Breite x Höhe x Länge
	Pos.3 Hülse						Pos.4 Gewindebolzen										
	s	t	u	v	w	R	x	y	z	z1	Pos.5	Pos.6	Pos.7	Pos.8	Pos.9	Pos.10	Pos.11
BK06	19.8	20	5	11.1	M8	0.8	130	100	20	M6	20x1	M6	6.4	6	M6x30	M6x120	A 6x6x63
BK10	24.8	24	5	15.4	M12	0.8	200	170	20	M8	25x1.2	M8	8.4	8	M8x30	M12x190	A 8x7x125
BK20	29.8	28	5	19.8	M14	0.8	230	195	23	M10	30x1.2	M10	10.5	10	M10x30	M14x210	A 8x7x140
BK30	34.8	28	5	23	M14	-	260	220	23	M10	35x1.5	M10	10.5	10	M10x35	M14x240	A 10x8x180
BK40	39.8	40	6	27.7	M20	0.8	300	260	28	M12	40x1.75	M12	13	12	M12x35	M20x290	A 12x8x200
BK50	49.8	48	6	36	M24	-	340	290	37	M16	50x2.0	M16	17	16	M16x40	M24x320	A 14x9x220
BK60	59.8	60	6	44	M30	-	370	310	45	M20	60x2.0	M20	21	20	M20x50	M30x350	A 18x11x250
BK70	79.8	60	8	55	M30	-	420	360	45	M20	80x2.5	M20	21	20	M20x50	M30x400	A 22x14x280
BK70-K70	69.8	60	8	53	M30	-	420	360	45	M20	70x2.5	M20	21	20	M20x50	M30x400	A 20x12x280
BK80	99.8	72	10	75	M36	-	480	410	55	M24	100x3.0	M24	25	24	M24x60	M36x450	A 28x16x320
BK90	119.8	72	10	80	M36	-	560	480	55	M24	120x4.0	M24	25	24	M24x60	M36x520	A 32x18x400

Die dargestellten Teile werden zur Montage benötigt. NUR ✳ gekennzeichneten Teile sind im Montagehilfeset enthalten.

Optional:

Typ	Ø s	Bestelltext
BK06	20	Id.Nr.4104013 Montagehilfe "halten"
BK10	25	Id.Nr.4103921 Montagehilfe "halten"
BK20	30	Id.Nr.4103939 Montagehilfe "halten"
BK30	35	Id.Nr.4103947 Montagehilfe "halten"
BK40	40	Id.Nr.4103955 Montagehilfe "halten"
BK50	50	Id.Nr.4103963 Montagehilfe "halten"
BK60	60	Id.Nr.4103971 Montagehilfe "halten"
BK70	80	Id.Nr.4103980 Montagehilfe "halten"
BK70-K70	70	Id.Nr.4104765 Montagehilfe "halten"
BK80	100	Id.Nr.4103998 Montagehilfe "halten"
BK90	120	Id.Nr.4104005 Montagehilfe "halten"

The actual gearbox design can vary from the geometry shown.

Sealing Cap (VK)

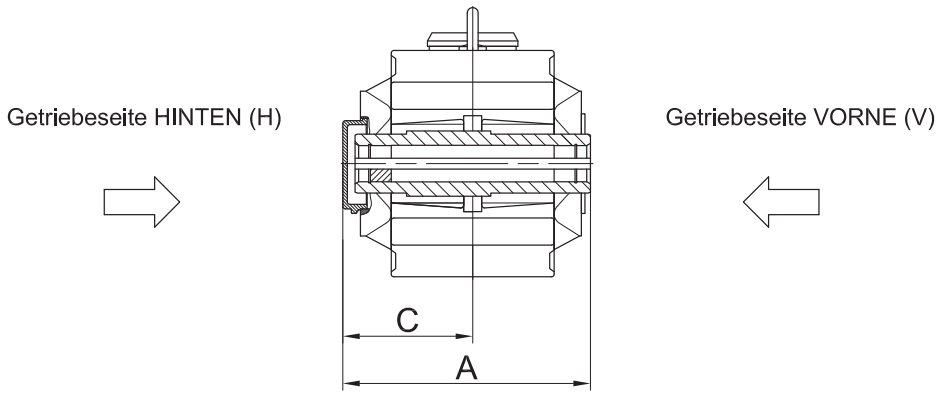

Getriebeseite HINTEN (H)

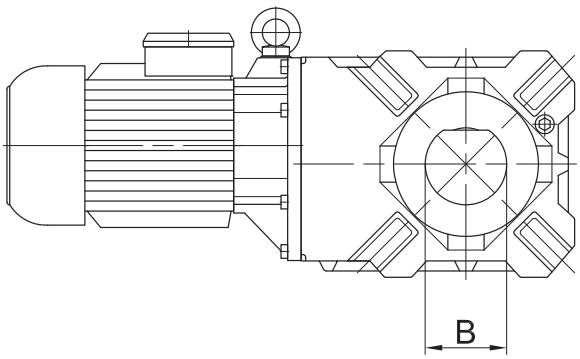

Typ	A	B	C
BK10	182.5	85	97.5
BK20	204.5	90	108.5
BK40	273.5	100	143.5
BK50	298	115	157
BK60	322	130	171
BK70	370	160	194

Sealing Cover (VD)

Getriebeseite HINTEN (H)

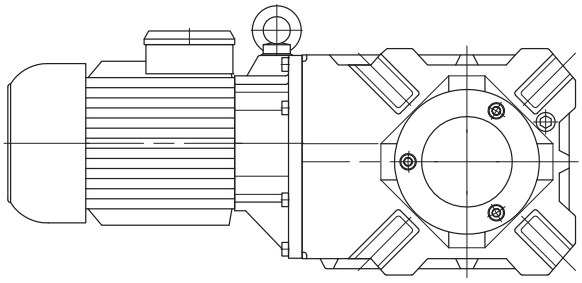

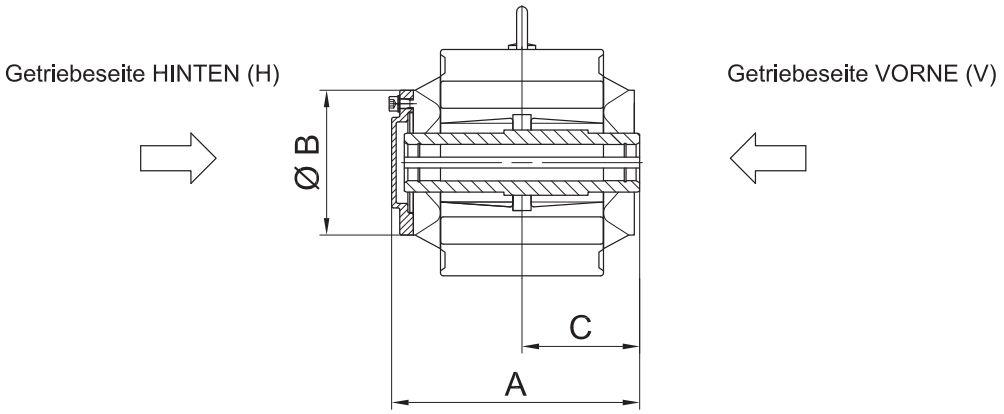

Typ	A	B	C
BK10	181	120	85
BK20	206	139.5	96
BK30	239	160	112
BK40	274	160	130
BK50	297	199	141
BK60	321	210	151
BK70	368	250	176
BK80	419	300	202
BK90	492	351	242

13

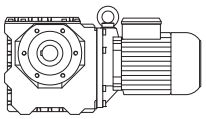

Page

Dimensional drawings of worm-geared motors 551-588
- Standard 552-567
- Tanden Gearbox 568-577

Additional Dimension Sheet
- Shrink disc couplings (SSV)
- Shrink disc couplings with (SSV) cover
- Rubber buffer for torque restraint
- Posittion of the torque arm
- Threaded foot, left
- Foot plate, left
- Sealing Cap (VK)
- Sealing Cover (VD)
- Assembly Tools for Hollow Shaft

BS02

Flansch mit Durchgangslöchern vorne

Code -3.V
(Code -4.V)

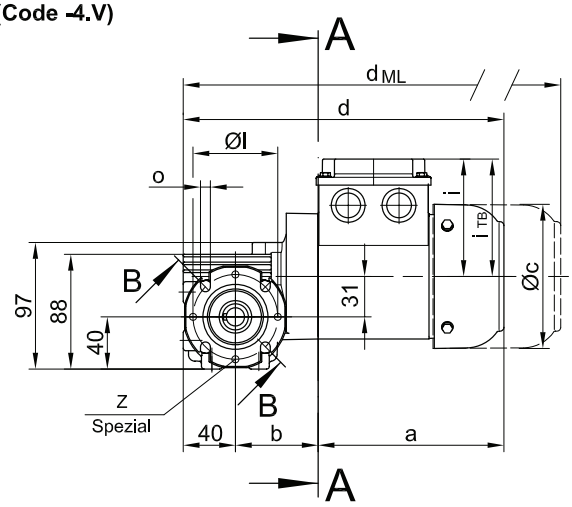

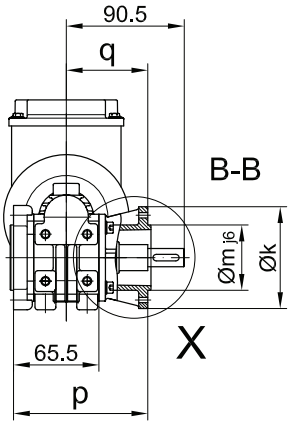

Code -.3/

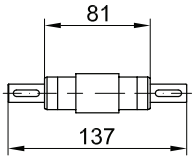

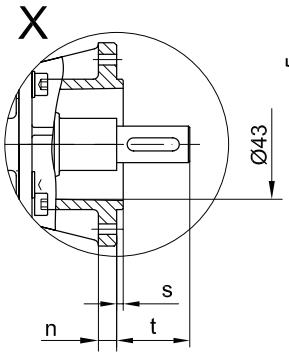

Code -.7/

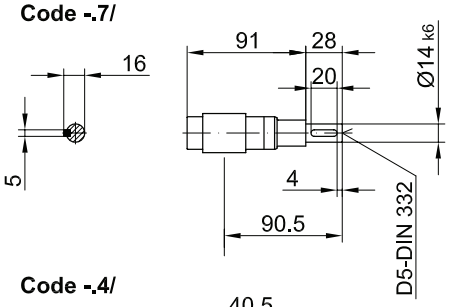

Code -.1/

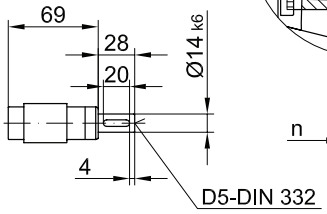

Code -.4/

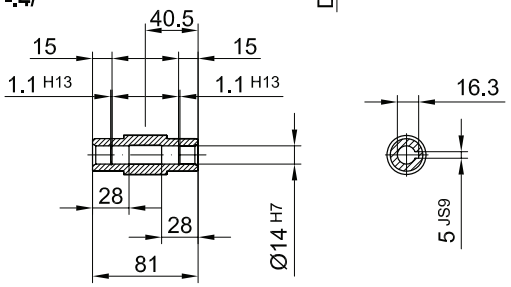

Flanschmasse

BS02	k	l	m	n	o	p	q	s	t	z
Standard -37V/	80	65	50	7	5.5	103	62.5	2.5	28	-
Spezial -37V/	80	65	50	7	5.5	103	62.5	2.5	28	4xM5
gross -47V/	110	80	60	8	6.6	103	62.5	2.5	28	-
Spezial -47V/	110	80	60	8	6.6	103	62.5	2.5	28	4xM6

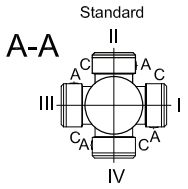

Typ	a	b	c	d	u	i	Ausführung mit Motoranbauten				
							i_{TB}	ES../ZS..	G	ES../ZS..-G	RR/RL
								d_{ML}	d_{ML}	d_{ML}	d_{ML}
BS02-../D04..	143	63.5	111	246	178	90	124.5	289.5	308.5	352	-
BS02-../D05..	170	65.5	123	274	188	100	129.5	315	377	418	-
BS02-../D06..	170	65.5	123	274	188	100	131.5	315	377	418	-
BS02-../D07..	190	65.5	123	294	188	100	131.5	335	397	438	-

The actual gearbox design can vary from the geometry shown.

BS02

Drehmomentstütze vorne
Code -5.V/

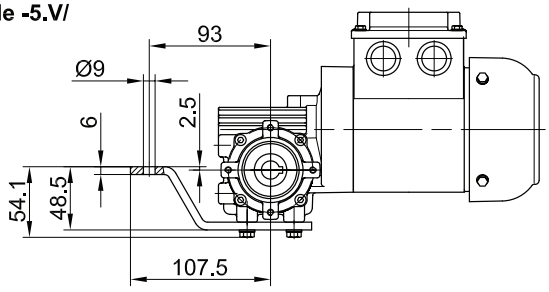

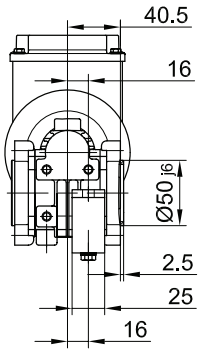

Flansch mit Gewindelöchern vorne
Code -7.V/

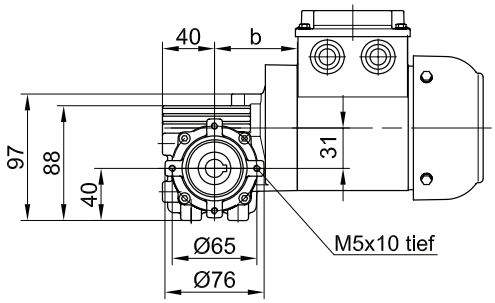

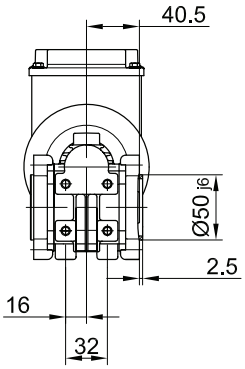

Fuss mit Gewindelöchern unten
Code -6.U/

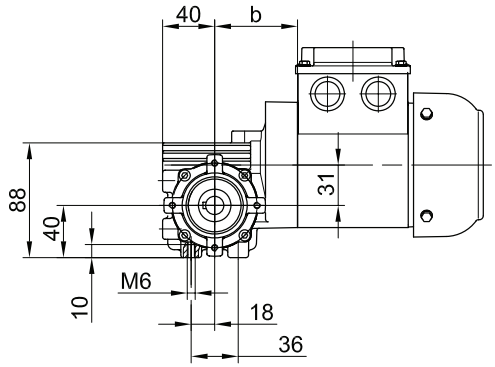

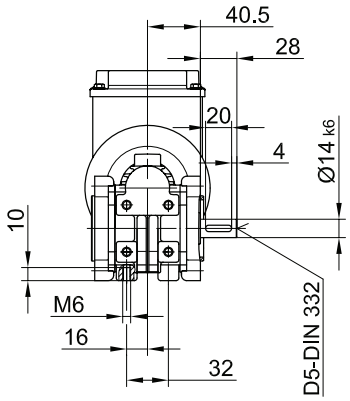

Fuss mit Durchgangslöchern unten
Code -1.U/

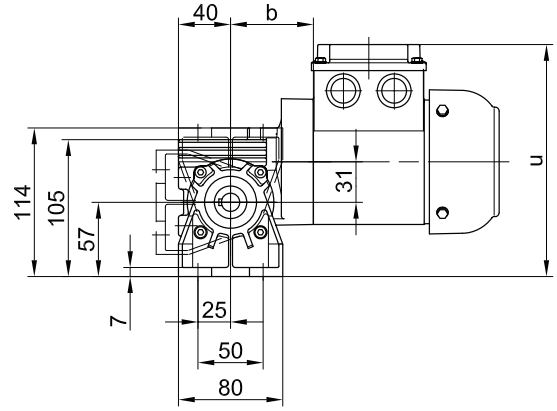

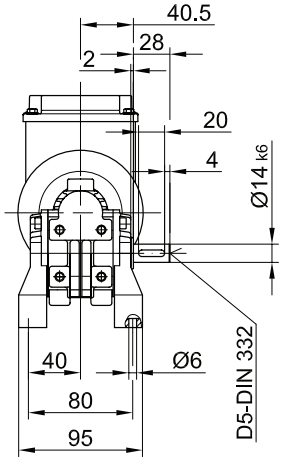

The actual gearbox design can vary from the geometry shown.

BS03

Flansch mit Durchgangslöchern vorne

Code -3.V/

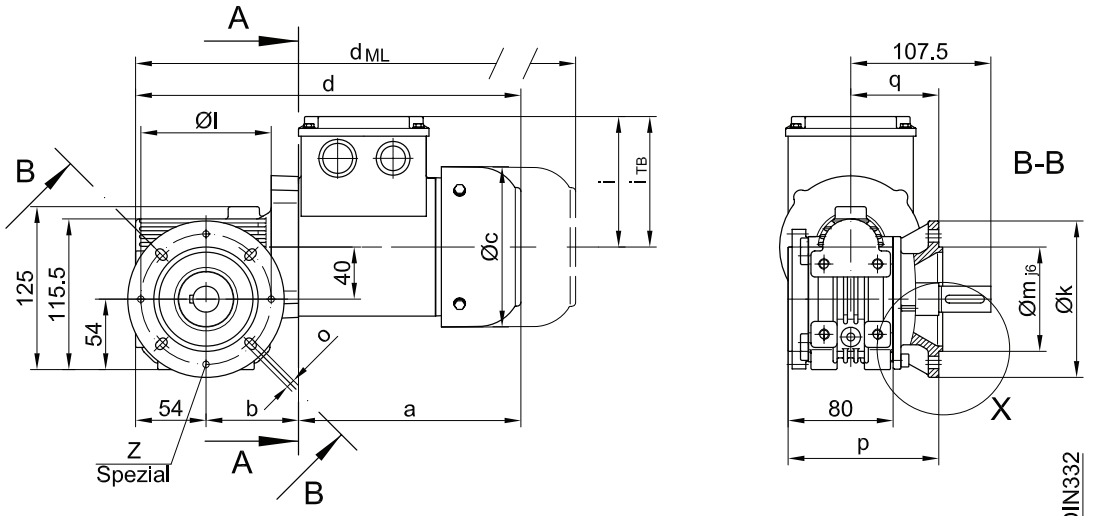

Code -.3/

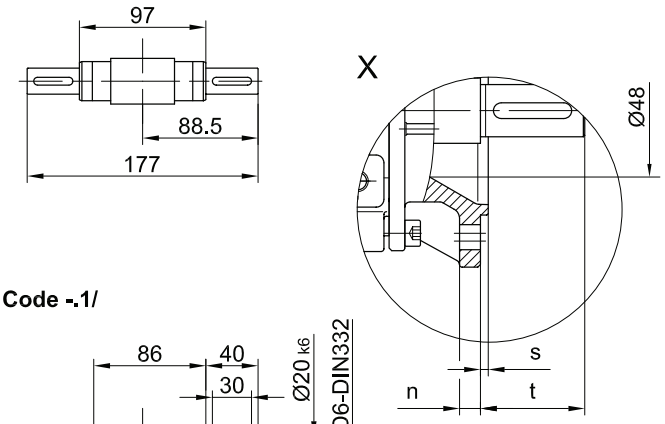

Code -.7/

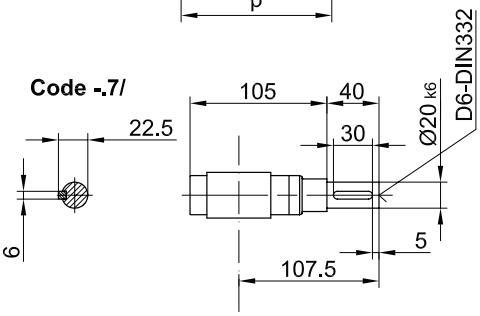

Code -.1/

Code -.4/

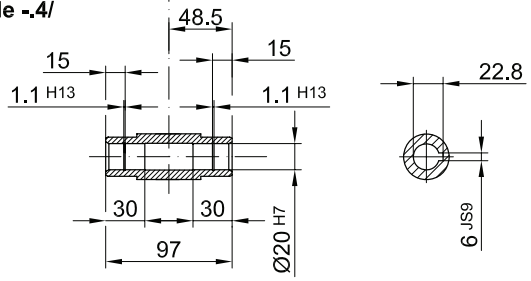

Flanschmasse

BS03	k	l	m	n	o	p	q	s	t	z
Standard -37V/	120	100	80	8	6.6	115	67.5	3	40	-
Spezial -37V/	120	100	80	8	6.6	115	67.5	3	40	4xM6

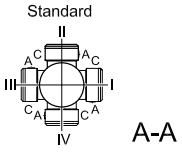

Typ	a	b	c	d	u	v	i	Ausführung mit Motoranbauten				
								iTB	ES../ZS..	G	ES../ZS..-G	RR/RL
									dML	dML	dML	dML
BS03-../D05..	170	71	123	296	213	70	100	129.5	337	399	440	-
BS03-../D06..	170	71	123	296	213	70	100	131.5	337	399	440	-
BS03-../D07..	190	71	123	316	213	70	100	131.5	357	419	460	-
BS03-../D..08..	200	115	156	369	228	-	115	149.5	435	476	542	435

The actual gearbox design can vary from the geometry shown.

BS03

Drehmomentstütze vorne

Code -5.V/

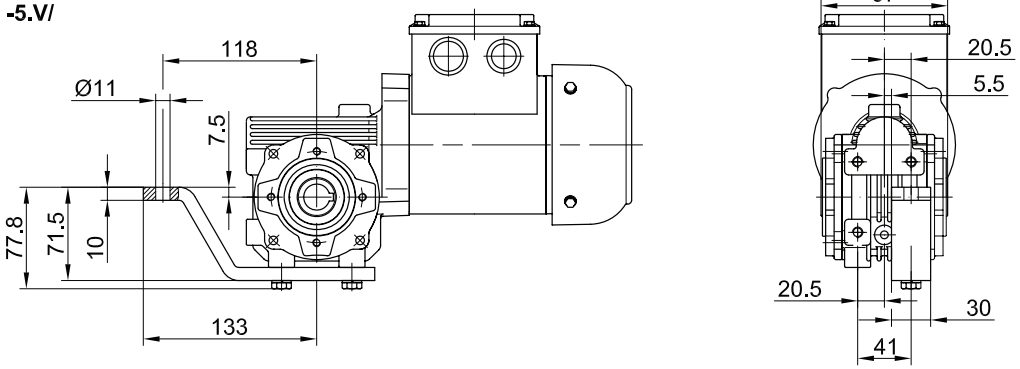

Flansch mit Gewindelöchern vorne

Code -7.V/

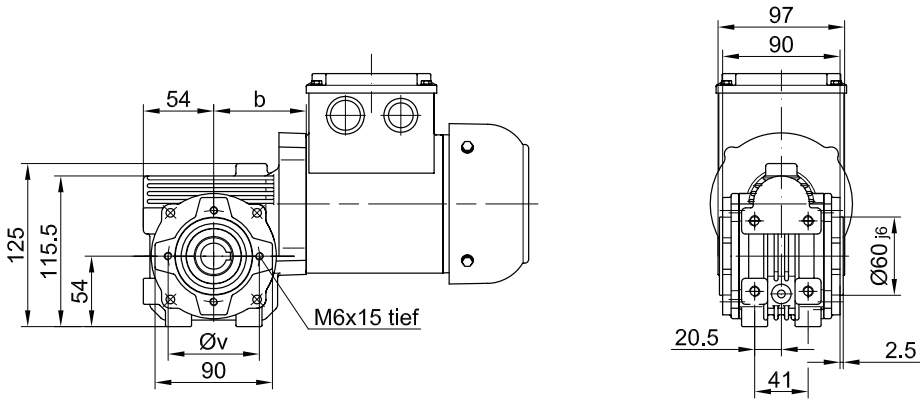

Fuss mit Gewindelöchern unten

Code -6.U/

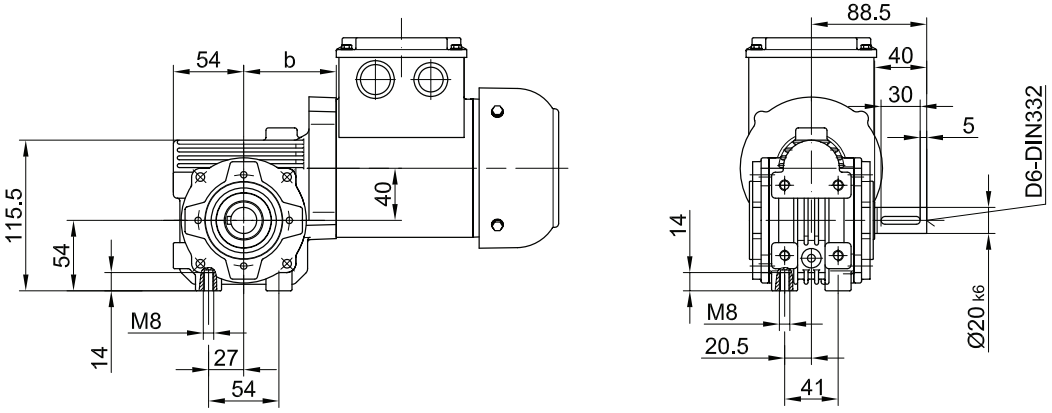

Fuss mit Durchgangslöchern unten

Code -1.U/

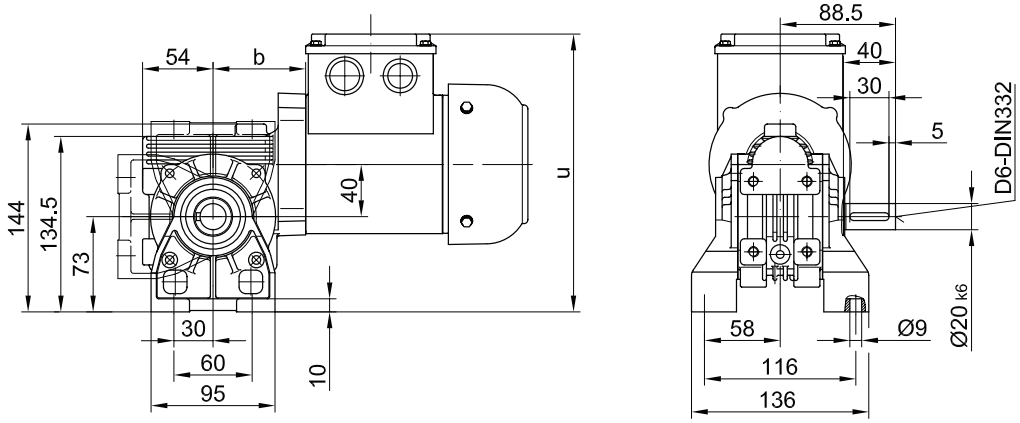

The actual gearbox design can vary from the geometry shown.

BS04

Flansch mit Durchgangslöchern vorne
Code -3.V/

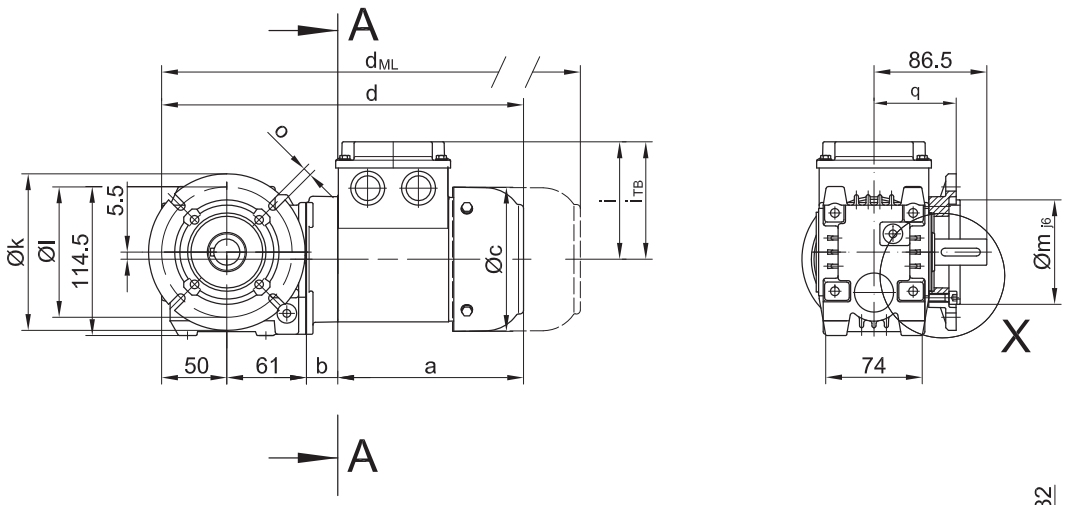

Code -.4/

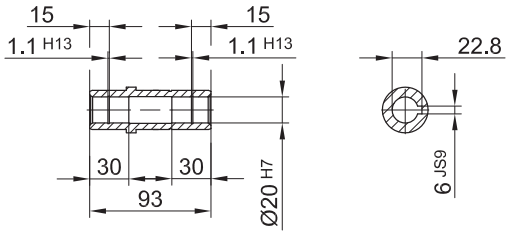

Code -.1/

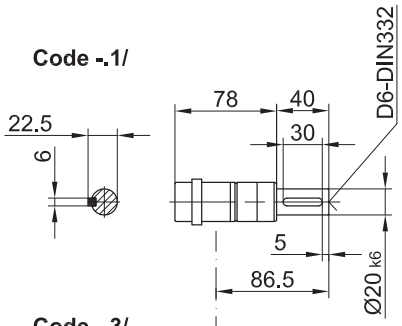

Code -.3/

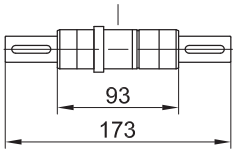

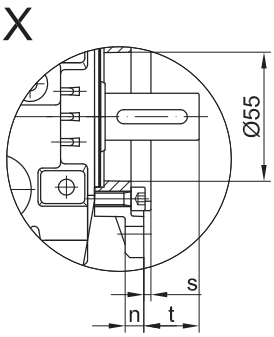

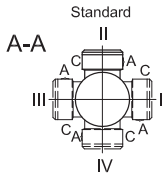

Flanschmasse

BS04	k	l	m	n	o	p	q	s	t
Standard -3.V/	120	100	80	8	6.6	110.5	63	3	23.5

Typ	a	b	c	d	i	Ausführung mit Motoranbauten				
						i_{TB}	ES../ZS..	G	ES../ZS..-G	RR/RL
							d_{ML}	d_{ML}	d_{ML}	d_{ML}
BS04-../D04..	143	24	111	278	90	124.5	321.5	340.5	384	-
BS04-../D05..	170	26	123	308	100	129.5	349	411	452	-
BS04-../D06..	170	26	123	308	100	131.5	349	411	452	-
BS04-../D07..	190	26	123	328	100	131.5	369	431	472	-

The actual gearbox design can vary from the geometry shown.

BS04

Drehmomentstütze vorne
Code -5.V/

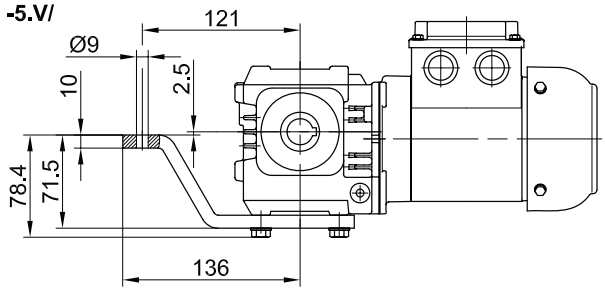

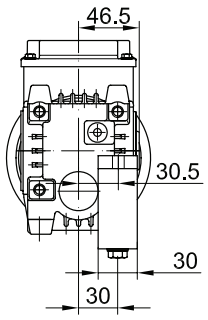

Flansch mit Gewindelöchern vorne
Code -7.V/

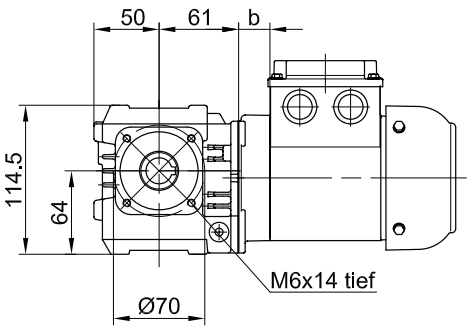

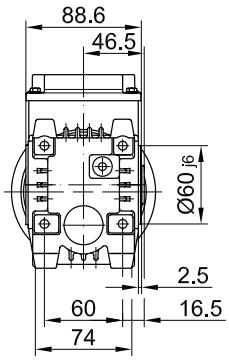

Fuss mit Gewindelöchern unten
Code -6.U/

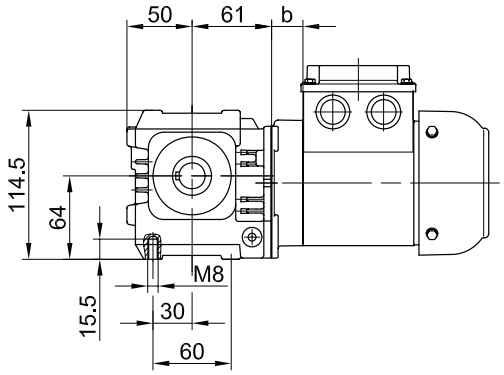

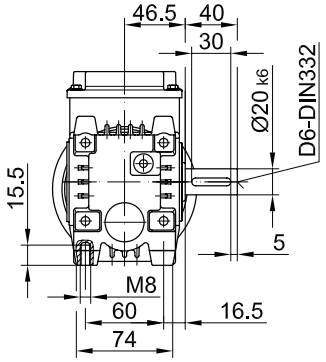

Fuss mit Durchgangslöchern unten
Code -1.U/

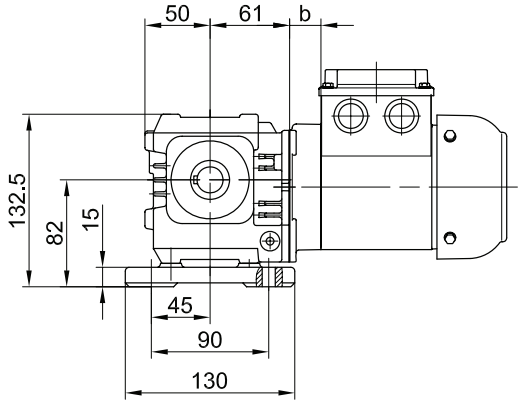

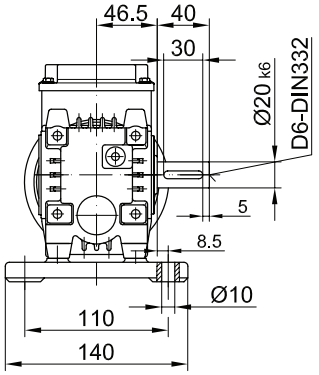

The actual gearbox design can vary from the geometry shown.

BS06

Flansch mit Durchgangslöchern vorne

(Code -4.V/)

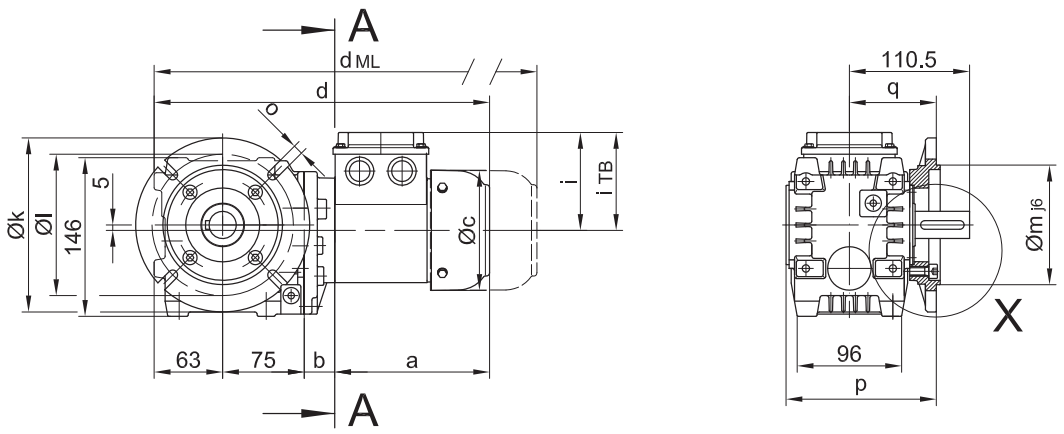

Code -.4/
Standard

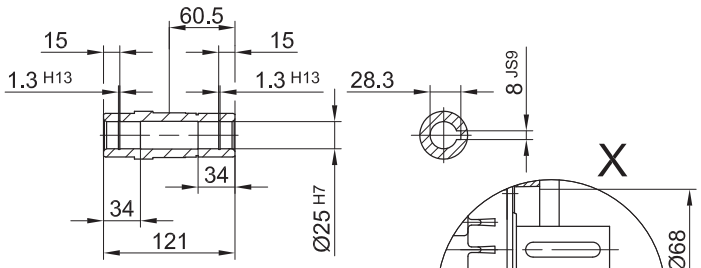

Code -.1/

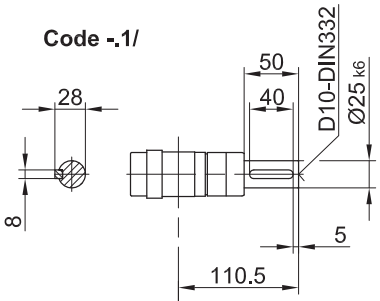

Code -.4/K20

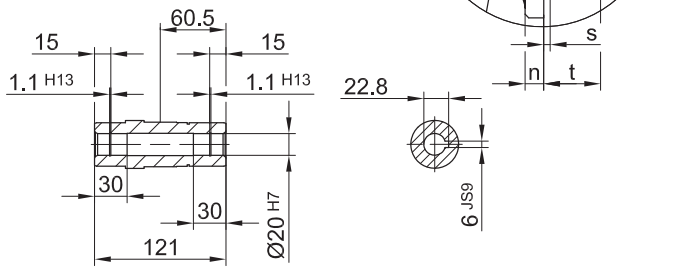

Code -.3/

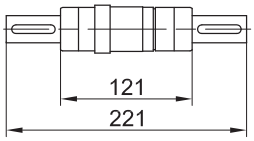

Flanschmasse

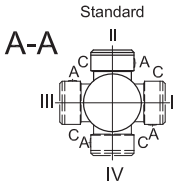

BS06	k	l	m	n	o	p	q	s	t
Standard -3.V/	140	115	95	10	9	138.5	80	3	30.5
gross -4.V/	160	130	110	10	9	138.5	80	3.5	30.5

Typ	a	b	c	d	i	Ausführung mit Motoranbauten				
						i_{TB}	ES../ZS..	G	ES../ZS..-G	RR/RL
							d_{ML}	d_{ML}	d_{ML}	d_{ML}
BS06-../D04..	143	28	111	309	90	124.5	352.5	371.5	415	-
BS06-../D05..	170	30	123	339	100	129.5	380	442	483	-
BS06-../D06..	170	30	123	339	100	131.5	380	442	483	-
BS06-../D07..	190	30	123	359	100	131.5	400	462	503	-
BS06-../D..08..	200	74	156	412	115	149.5	478	519	585	478

The actual gearbox design can vary from the geometry shown.

BS06

Drehmomentstütze vorne

Code -5.V/

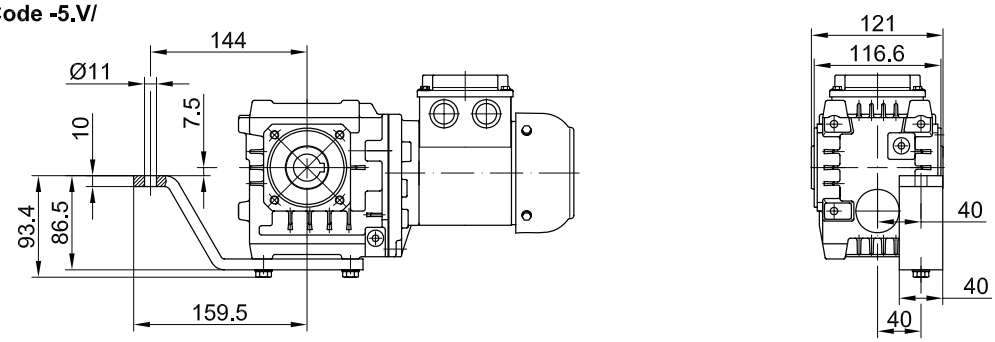

Flansch mit Gewindelöchern vorne

Code -7.V/

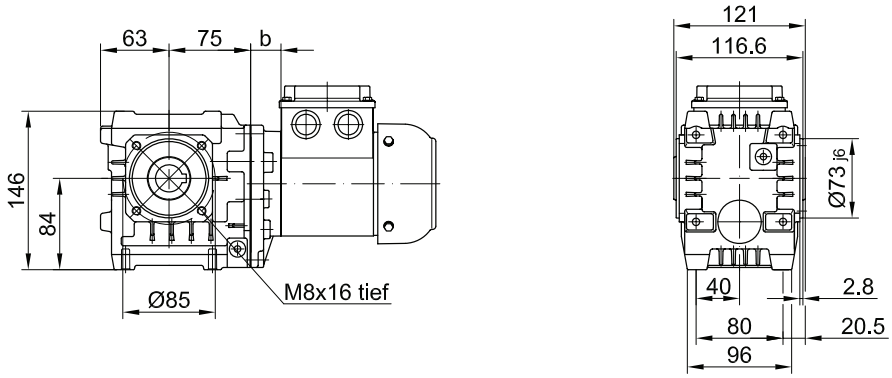

Fuss mit Gewindelöchern unten

Code -6.U/

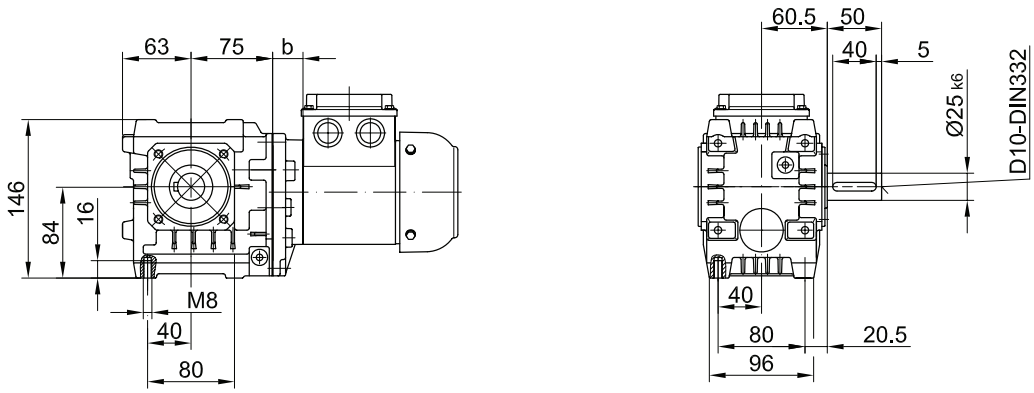

Fuss mit Durchgangslöchern unten

Code -1.U/

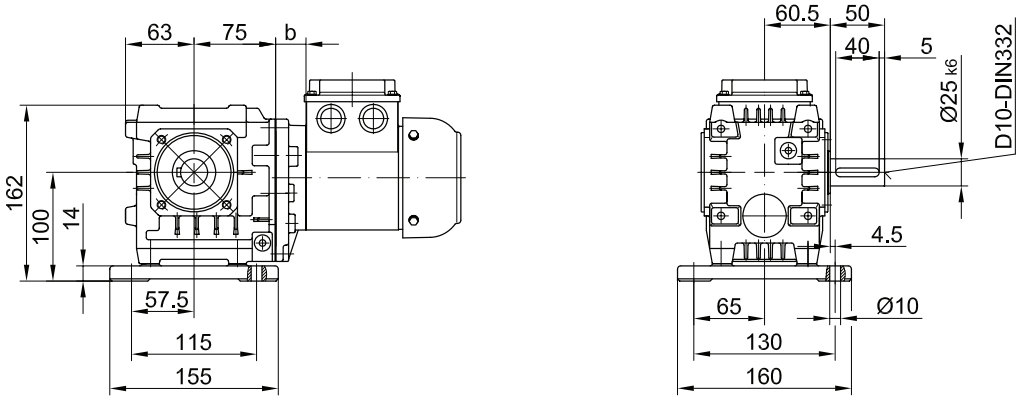

The actual gearbox design can vary from the geometry shown.

BS10 - BS10Z

Flansch mit Durchgangslöchern vorne
Code -3.V/
(Code -2.V/)

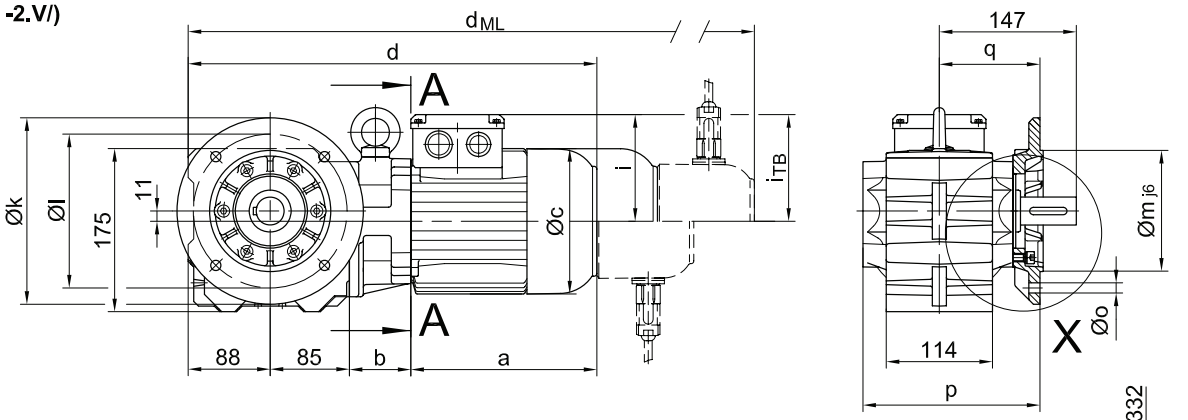

Code -.4/

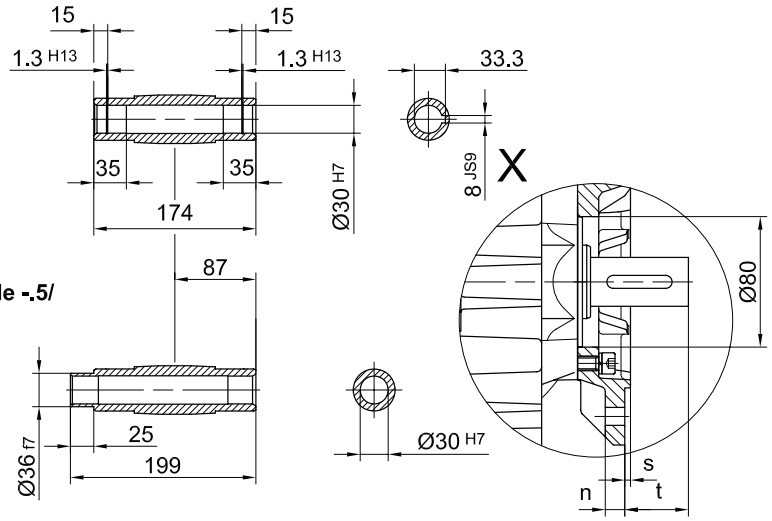

Code -.1/

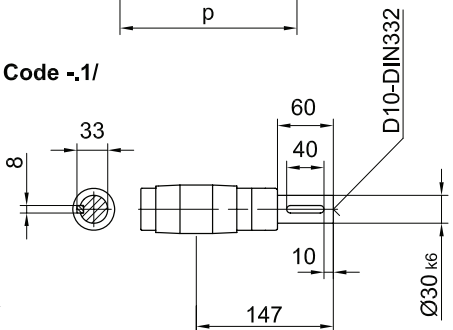

Code -.5/

Code -.3/

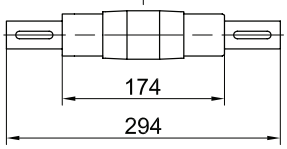

13

Flanschmasse

BS10(Z)	k	l	m	n	o	p	q	s	t
Standard -3.V/	200	165	130	12	11	190	108	3.5	39
klein -2.V/	160	130	110	10	9	183	101	3.5	46

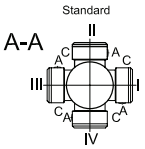

Typ	a	b	c	d	i	Ausführung mit Motoranbauten				
						i_{TB}	ES../ZS..	G	ES../ZS..-G	RR/RL
							d_{ML}	d_{ML}	d_{ML}	d_{ML}
BS10Z-../D04..	143	86	111	402	90	124.5	445.5	464.5	508	-
BS10-../D05..	170	62	123	406	100	129.5	447	509	550	-
BS10Z-../D05..	170	88	123	432	100	129.5	473	535	576	-
BS10-../D06..	170	62	123	406	100	131.5	447	509	550	-
BS10Z-../D06..	170	88	123	432	100	131.5	473	535	576	-
BS10-../D07..	190	62	123	426	100	131.5	467	529	570	-
BS10Z-../D07..	190	88	123	452	100	131.5	493	559	596	-
BS10-../D..08..	200	66	156	439	115	149.5	505	546	612	505
BS10Z-../D..08..	200	132	156	505	115	149.5	571	612	679	571
BS10-../D..09..	251	80.5	181	504	124	164	591	611	678	591

The actual gearbox design can vary from the geometry shown.

BS10 - BS10Z

Drehmomentstütze vorne
Code -5.V/

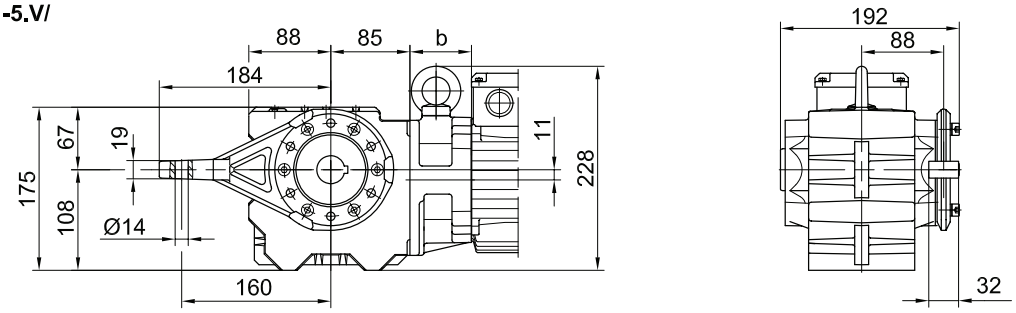

Flansch mit Gewindelöchern vorne
Code -7.V/

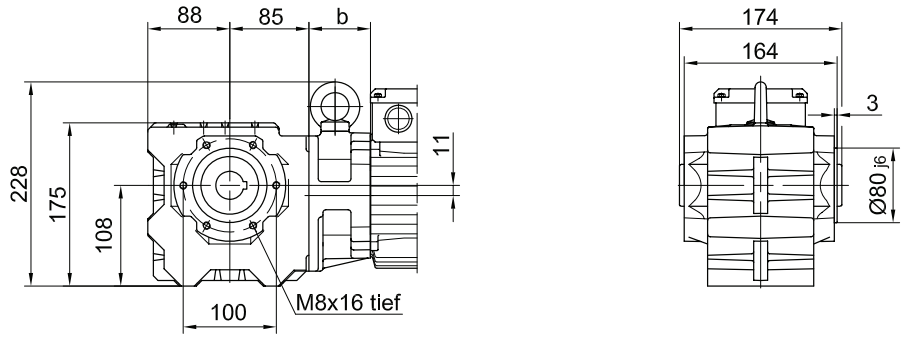

Fuss mit Gewindelöchern unten
Code -6.U/

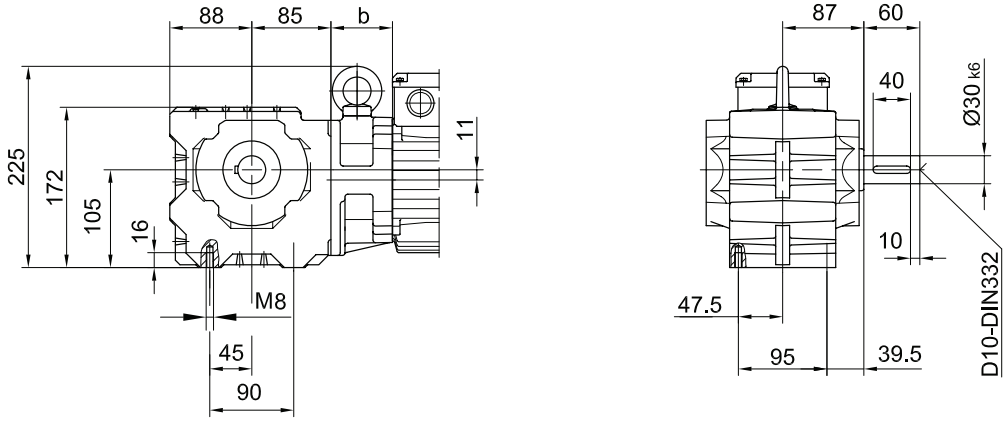

Fuss mit Durchgangslöchern unten
Code -1.U/

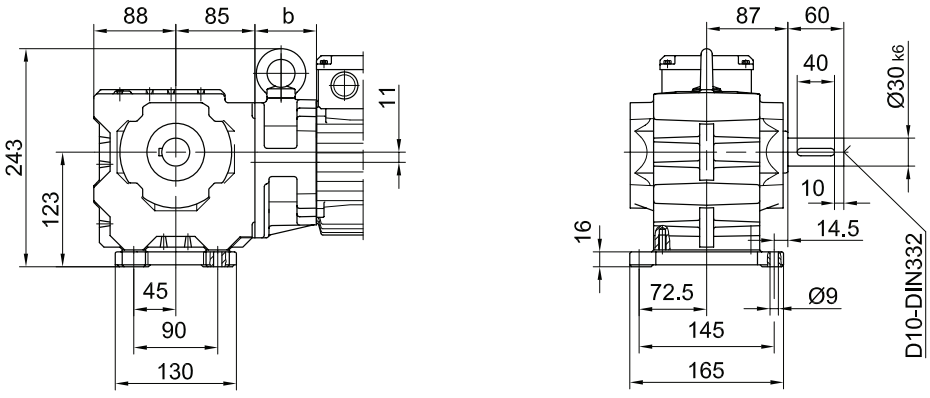

The actual gearbox design can vary from the geometry shown.

BS20 - BS20Z

Flansch mit Durchgangslöchern vorne

Code -3.V/
(Code -4.V/)
(Code -2.V/)

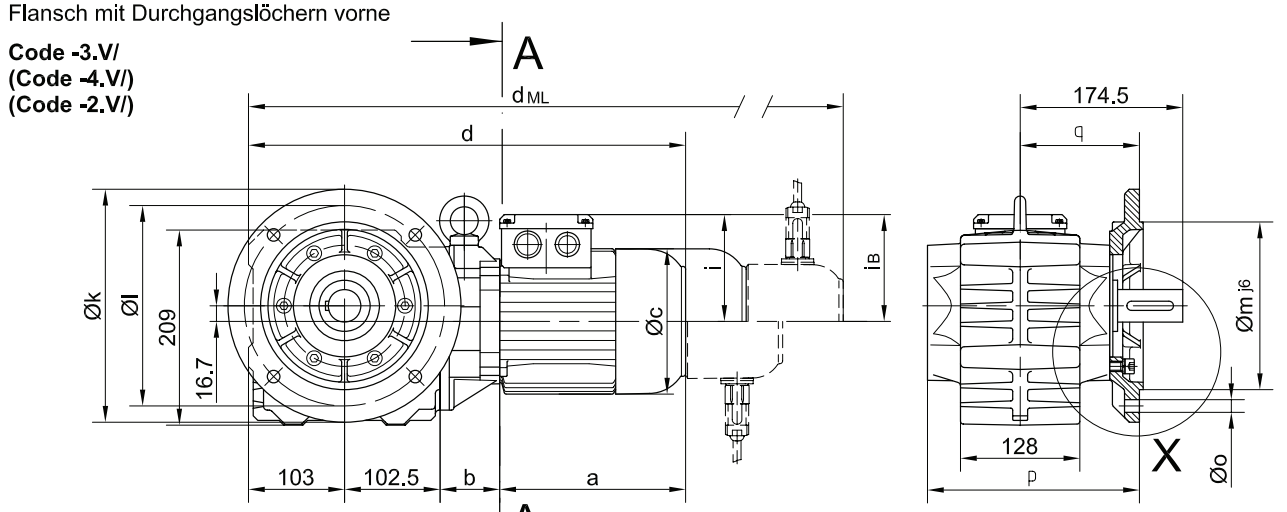

Code -.4/

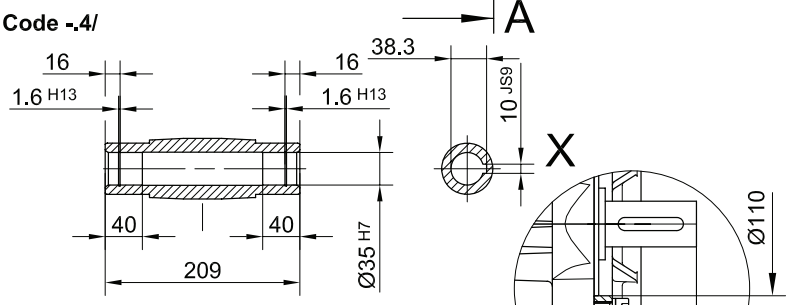

Code -.1/

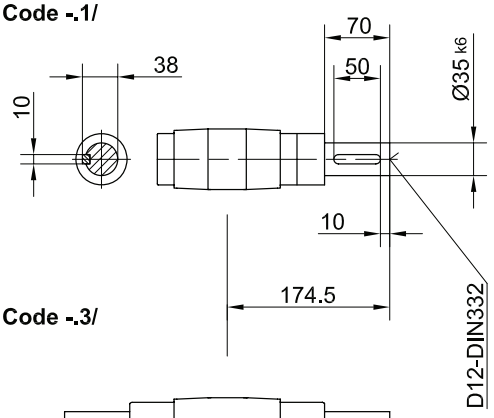

Code -.5/

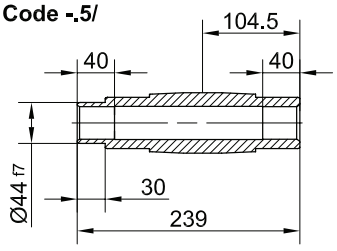

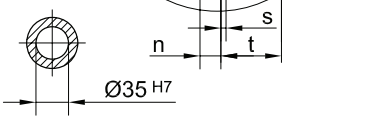

Code -.3/

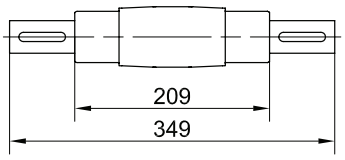

Flanschmasse

BS20(Z)	k	l	m	n	o	p	q	s	t
Standard -3.V/	250	215	180	16	13.5	227.5	128	4	46.5
klein -2.V/	200	165	130	12	11	224.5	125	3.5	49.5
gross -4.V/	300	265	230	20	13.5	233.5	134	4	40.5

A-A

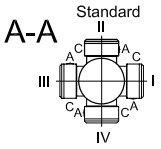

Typ	a	b	c	d	i	i_B	Ausführung mit Motoranbauten			
							ES../ZS..	G	ES../ZS..-G	RR/RL
							d_{ML}	d_{ML}	d_{ML}	d_{ML}
BS20Z-../D04..	143	100	111	448	90	90	491.5	510.5	554	-
BS20-../D05..	170	60	123	436	100	100	477	539	580	-
BS20Z-../D05..	170	102	123	478	100	100	519	581	621	-
BS20-../D06..	170	60	123	436	100	100	477	539	580	-
BS20Z-../D06..	170	102	123	478	100	100	519	581	621	-
BS20-../D07..	190	60	123	456	100	100	597	559	600	-
BS20Z-../D07..	190	102	123	498	100	100	539	601	641	-
BS20-../D..08..	200	64	156	469	115	115	535	576	642	535
BS20Z-../D..08..	200	146	156	552	115	115	618	659	725	618
BS20-../D..09..	251	78.5	181	535	124	124	622	642	729	622

The actual gearbox design can vary from the geometry shown.

BS20 - BS20Z

Drehmomentstütze vorne

Code -5.V/

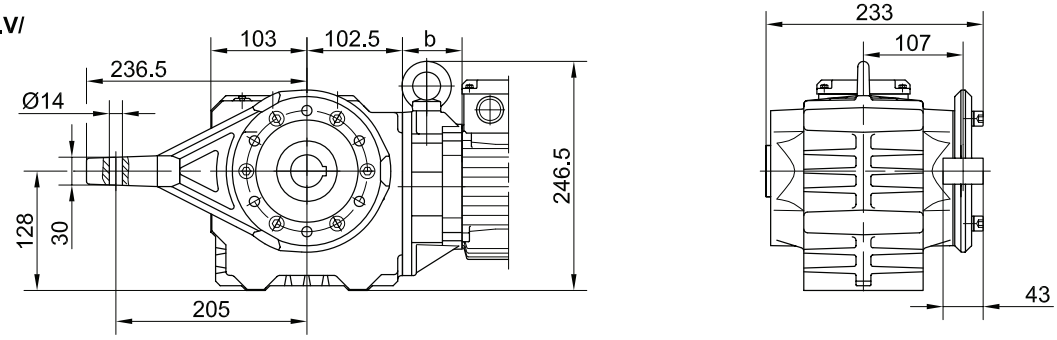

Flansch mit Gewindelöchern vorne

Code -7.V/

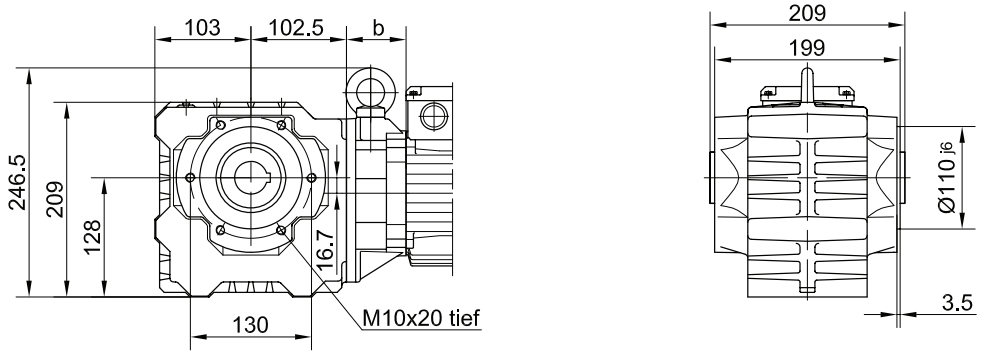

Fuss mit Gewindelöchern unten

Code -6.U/

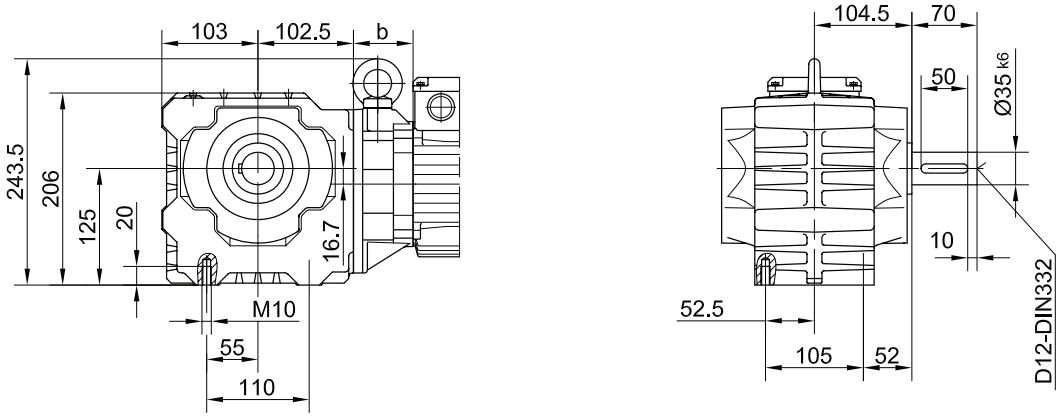

Fuss mit Durchgangslöchern unten

Code -1.U/

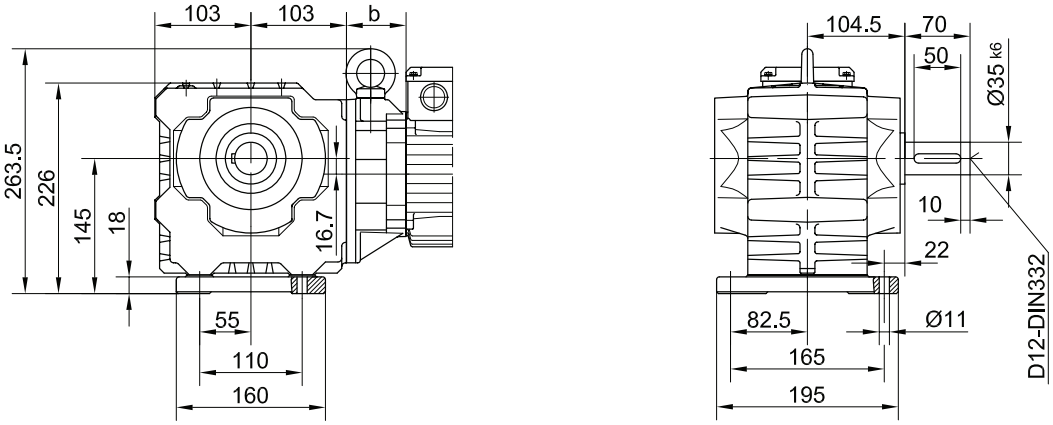

The actual gearbox design can vary from the geometry shown.

BS30 - BS30Z

Flansch mit Durchgangslöchern vorne
Code -3.V/
(Code -4.V/)

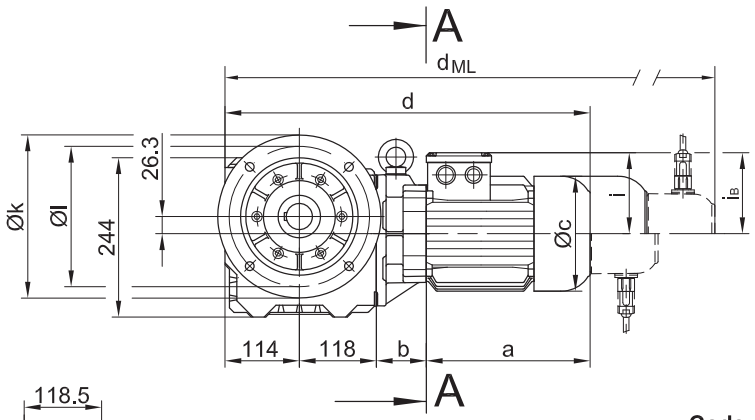

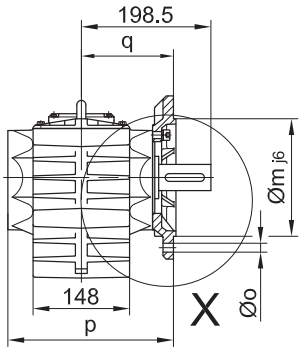

Code -.4/

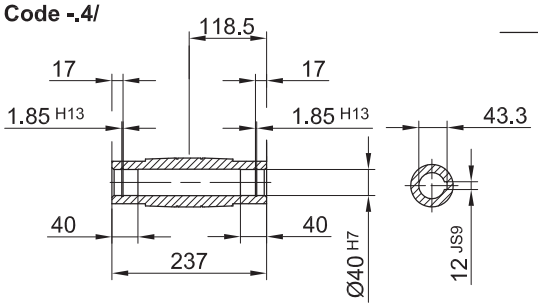

Code -.1/

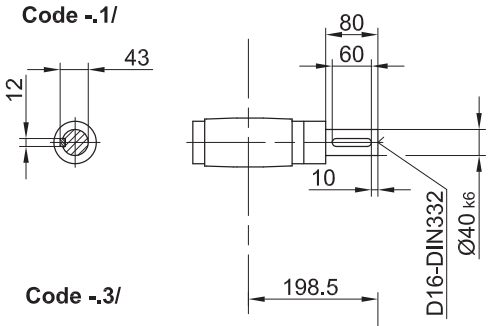

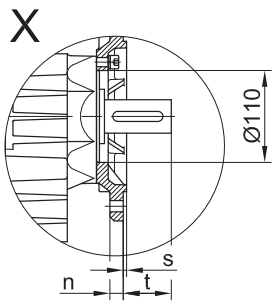

Code -.5/

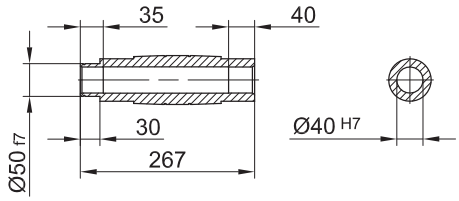

Code -.3/

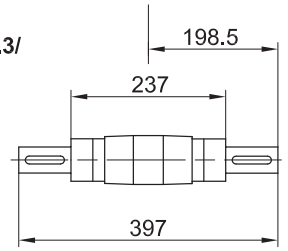

Flanschmasse

BS30(Z)	k	l	m	n	o	p	q	s	t
Standard -3.V/	250	215	180	16	13.5	253.5	141	4	57.5
gross -4.V/	300	265	230	20	13.5	259.5	147	4	51.5

A-A Standard

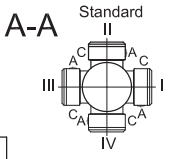

Typ	a	b	c	d	i	i_B	Ausführung mit Motoranbauten			
							ES../ZS..	G	ES../ZS..-G	RR/RL
							d_{ML}	d_{ML}	d_{ML}	d_{ML}
BS30-../D05..	170	58	123	461	100	100	502	564	605	-
BS30Z-../D05..	170	133.5	123	536	100	100	577	639	680	-
BS30-../D06..	170	58	123	461	100	100	502	564	605	-
BS30Z-../D06..	170	133.5	123	536	100	100	577	639	680	-
BS30-../D07..	190	58	123	481	100	100	522	584	625	-
BS30Z-../D07..	190	133.5	123	556	100	100	597	654	700	-
BS30-../D..08..	200	62	156	494	115	115	560	603	667	560
BS30Z-../D..08..	200	137.5	156	570	115	115	636	677	743	636
BS30-../D..09..	251	77	181	560	124	124	647	667	754	647
BS30Z-../D..09..	251	152	181	635	124	124	722	742	829	722
BS30-../D..11..	319	83	228	634	181	181	730	741	837	730

The actual gearbox design can vary from the geometry shown.

BS30 - BS30Z

Drehmomentstütze vorne
Code -5.V/

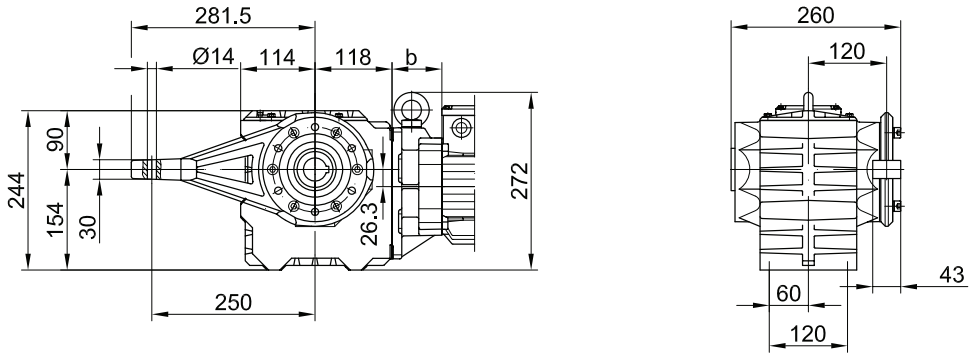

Flansch mit Gewindelöchern vorne
Code -7.V/

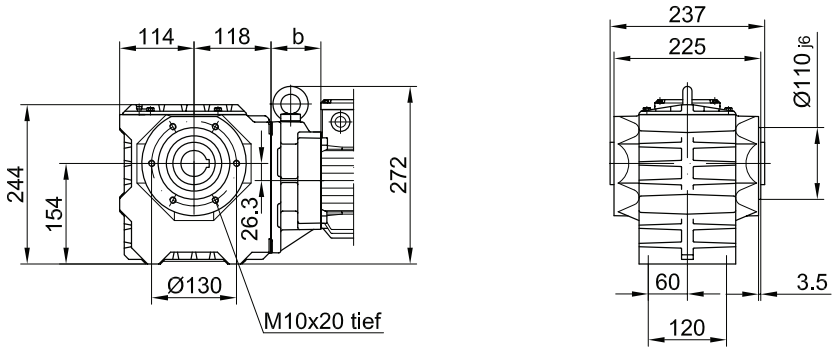

Fuss mit Gewindelöchern unten
Code -6.U/

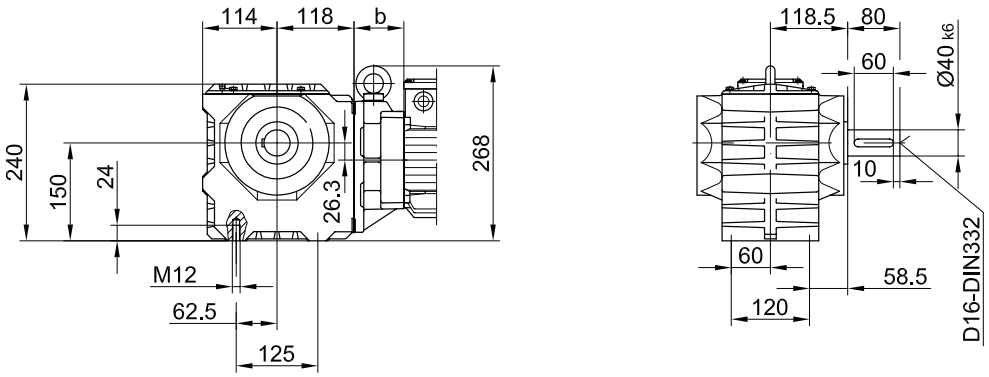

Fuss mit Durchgangslöchern unten
Code -1.U/

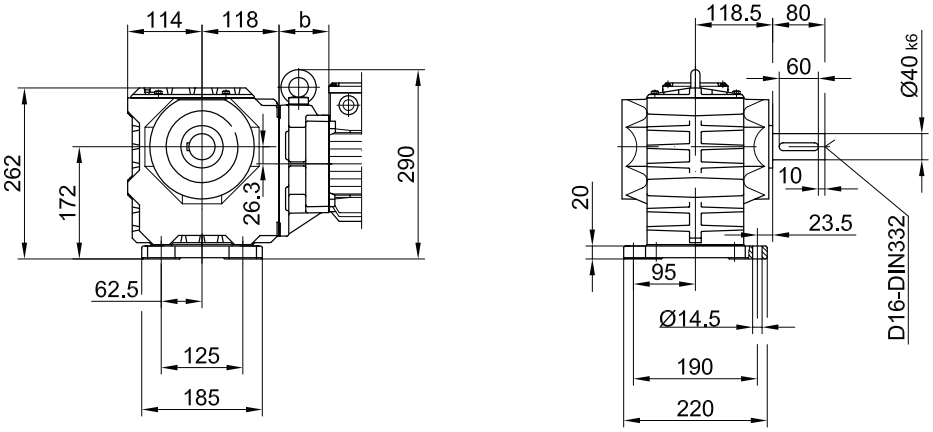

The actual gearbox design can vary from the geometry shown.

BS40 - BS40Z

Flansch mit Durchgangslöchern vorne

Code -3.V/

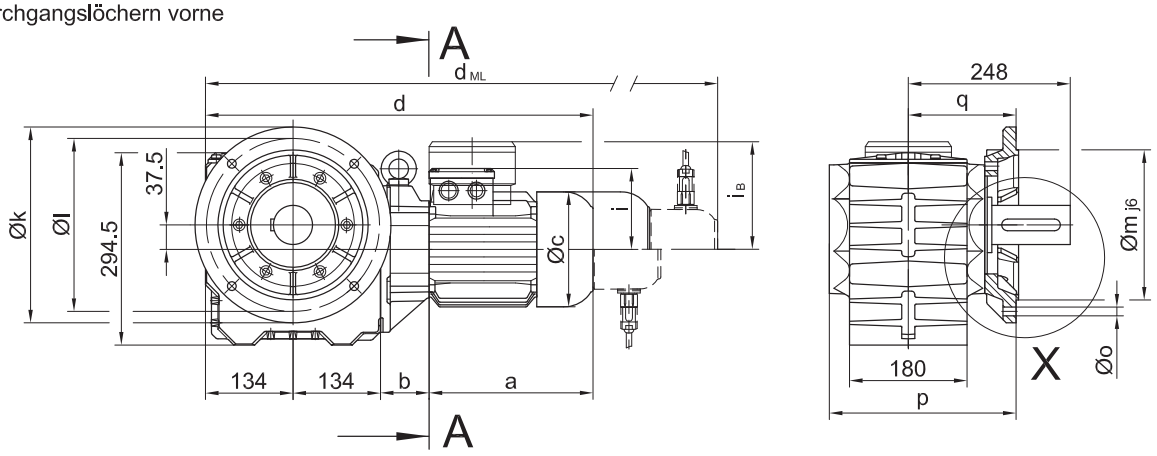

Code -.4/

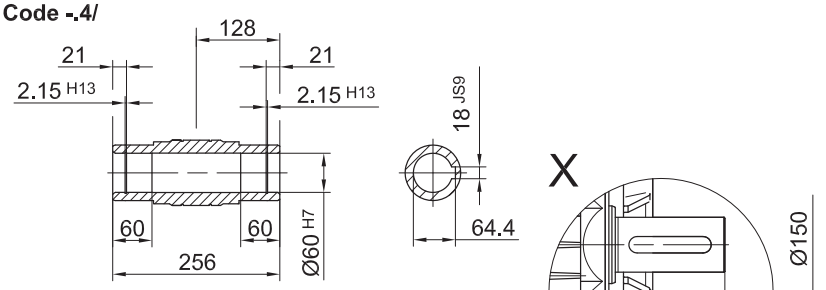

Code -.1/

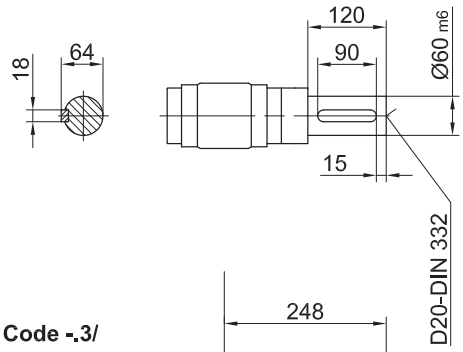

Code -.5/

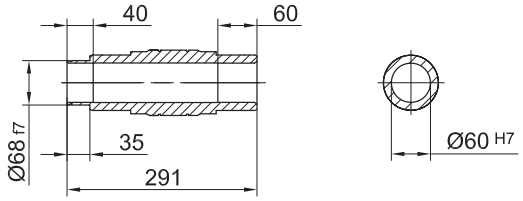

Code -.3/

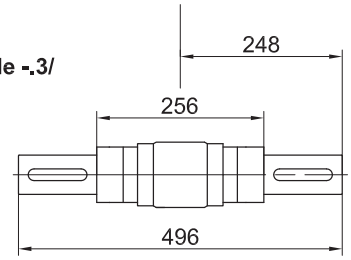

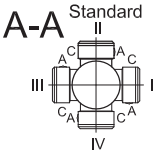

Flanschmasse

BS40(Z)	k	l	m	n	o	p	q	s	t
Standard -3.V/	300	265	230	20	13.5	286	165	4	83

Typ	a	b	c	d	i	i_B	Ausführung mit Motoranbauten			
							ES../ZS..	G	ES../ZS..-G	RR/RL
							d_{ML}	d_{ML}	d_{ML}	d_{ML}
BS40Z-../D05..	170	138.5	123	577	100	100	618	680	721	-
BS40Z-../D06..	170	138.5	123	577	100	100	618	680	721	-
BS40Z-../D07..	190	138.5	123	597	100	100	638	700	721	-
BS40-../D..08..	200	60	156	528	115	115	594	635	701	594
BS40Z-../D..08..	200	143.5	156	610	115	115	676	717	783	676
BS40-../D..09..	251	74.5	181	593	124	124	680	700	787	680
BS40Z-../D..09..	251	157	181	676	124	124	763	784	870	763
BS40-../D..11..	319	81	228	668	181	181	764	775	871	764

The actual gearbox design can vary from the geometry shown.

BS40 - BS40Z

Drehmomentstütze vorne

Code -5.V/

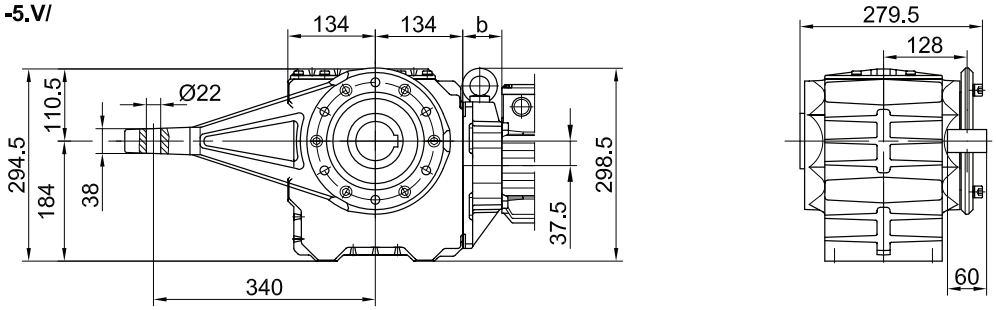

Flansch mit Gewindelöchern vorne

Code -7.V/

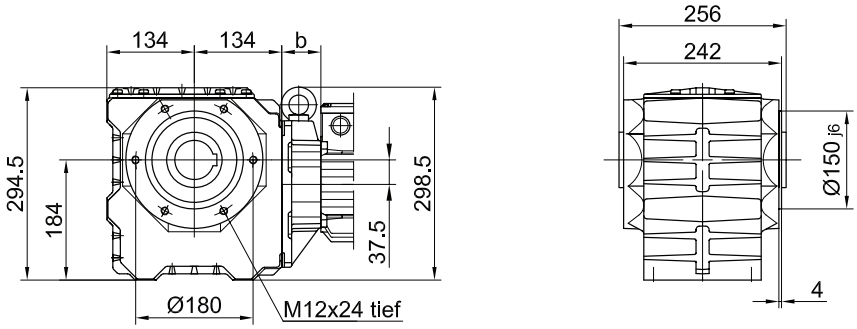

Fuss mit Gewindelöchern unten

Code -6.U/

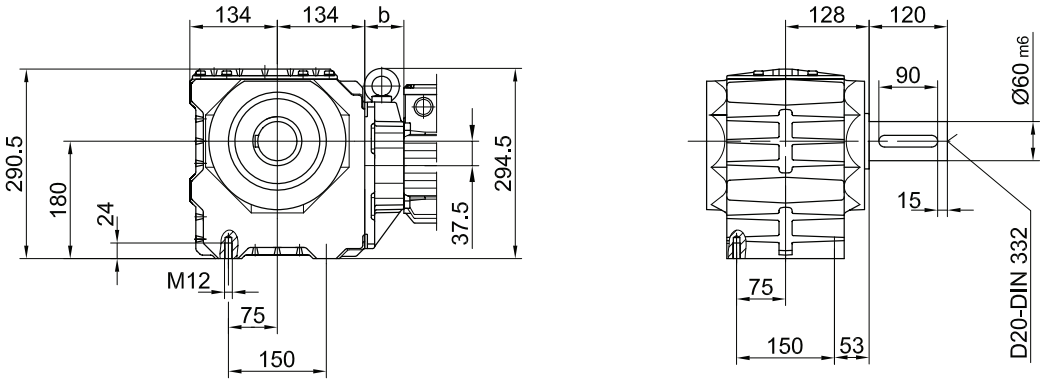

Fuss mit Durchgangslöchern unten

Code -1.U/

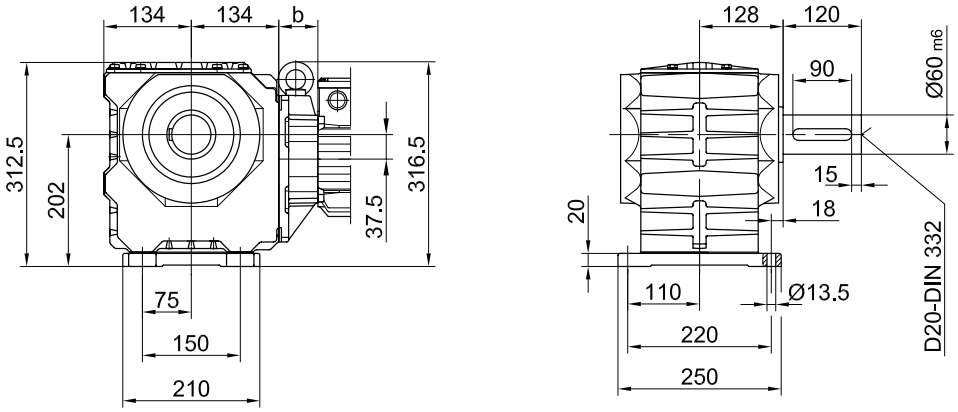

The actual gearbox design can vary from the geometry shown.

BS06G04

Flansch mit Durchgangslöchern vorne

Code -3.V/
(Code -4.V/)

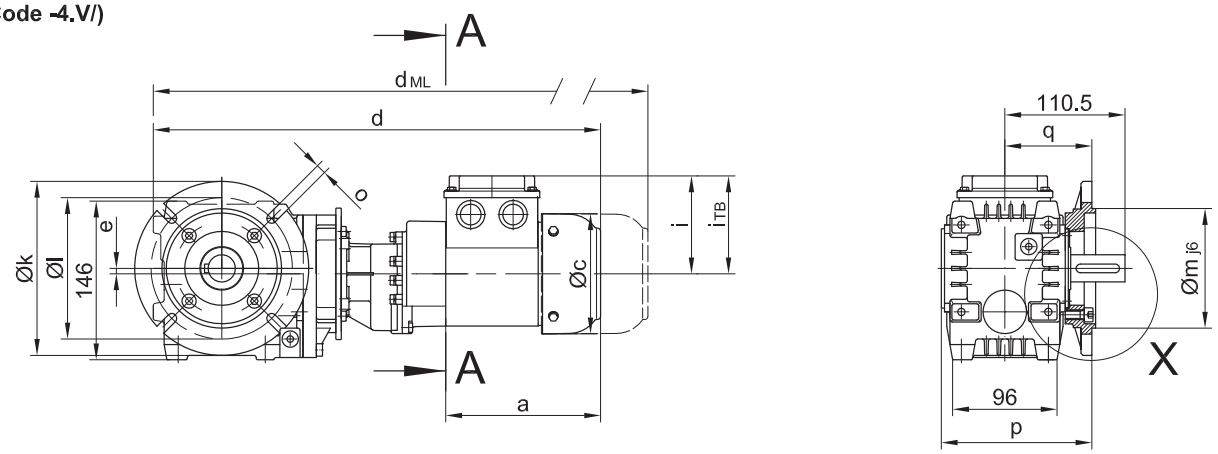

Code -.4/
Standard

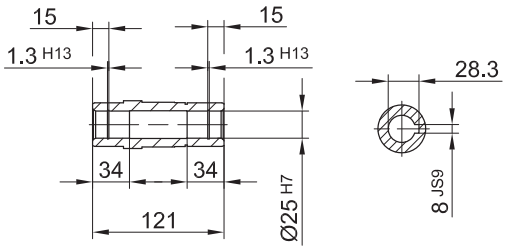

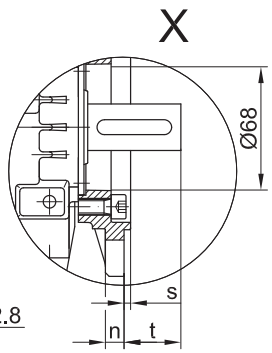

Code -.1/

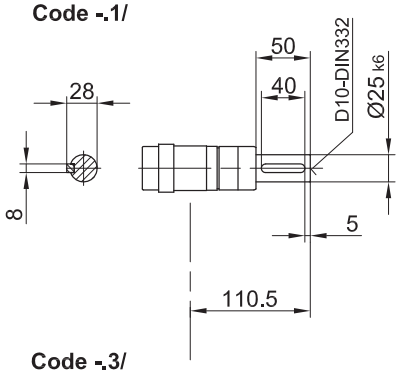

Code -.4/K20

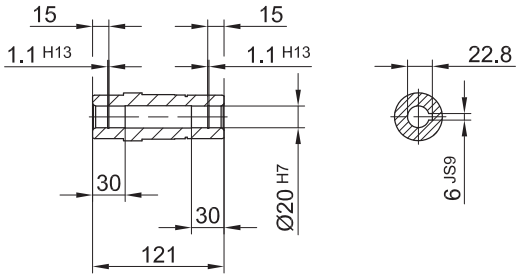

Code -.3/

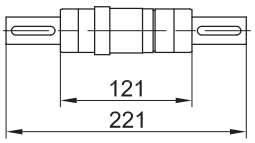

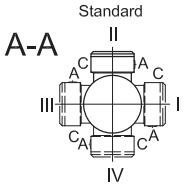

Flanschmasse

BS06	k	l	m	n	o	p	q	s	t
Standard -3.V/	140	115	95	10	9	138.5	80	3	30.5
gross -4.V/	160	130	110	10	9	138.5	80	3.5	30.5

Typ	a	b	c	d	e	i	Ausführung mit Motoranbauten				
							i_{TB}	ES../ZS..	G	ES../ZS..-G	RR/RL
								d_{ML}	d_{ML}	d_{ML}	d_{ML}
BS06G04-../D04..	143	131	111	412	5	90	124.5	455.5	474.5	518	-

The actual gearbox design can vary from the geometry shown.

BS06G04

Drehmomentstütze vorne
Code -5.V/

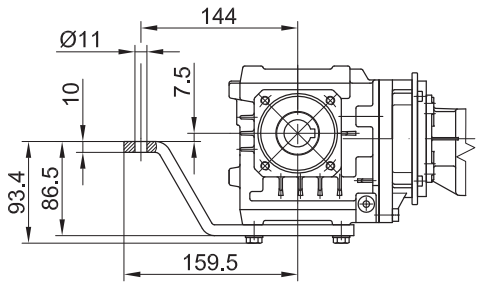

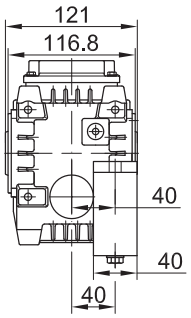

Flansch mit Gewindelöchern vorne
Code -7.V/

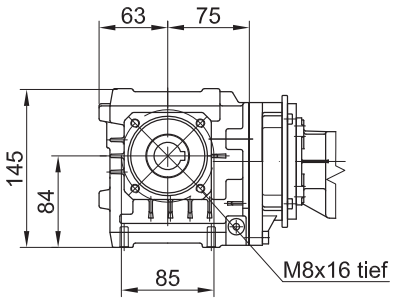

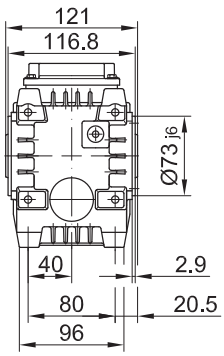

Fuss mit Gewindelöchern unten
Code -6.U/

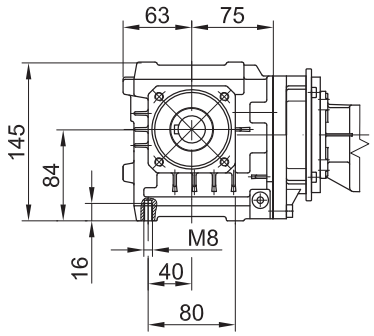

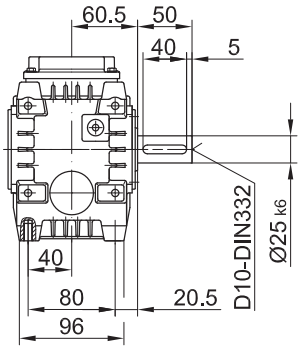

Fuss mit Durchgangslöchern unten
Code -1.U/

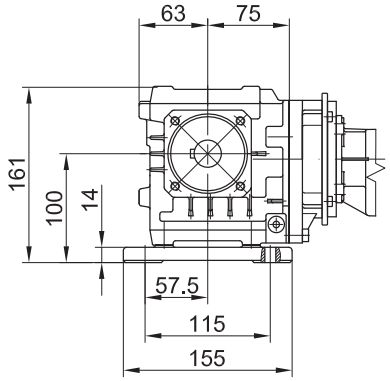

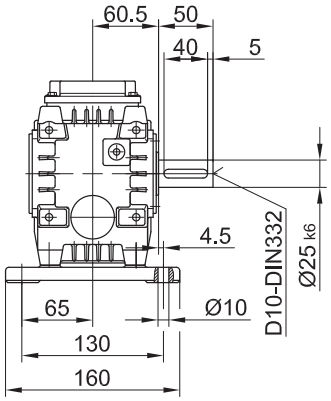

The actual gearbox design can vary from the geometry shown.

BS10G06

Flansch mit Durchgangslöchern vorne

Code -3.V/
(Code -2.V/)

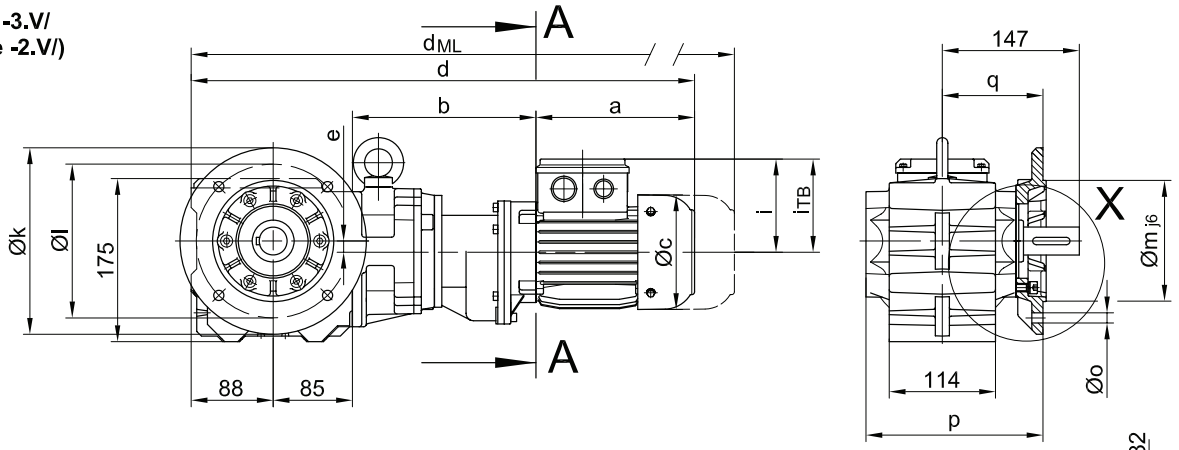

Code -.4/

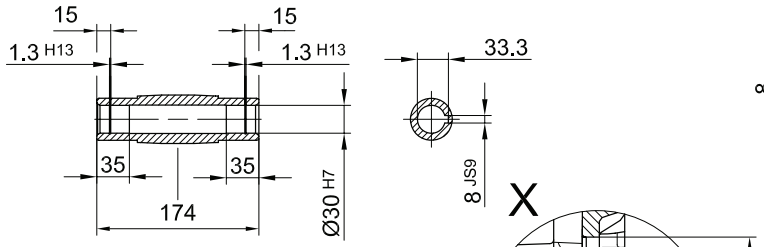

Code -.1/

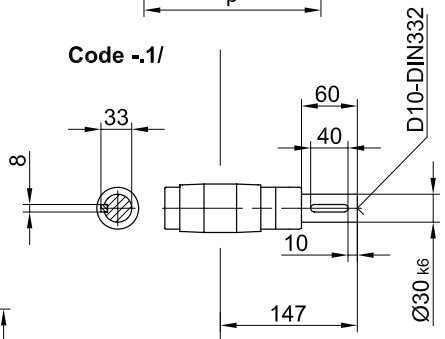

Code -.5/

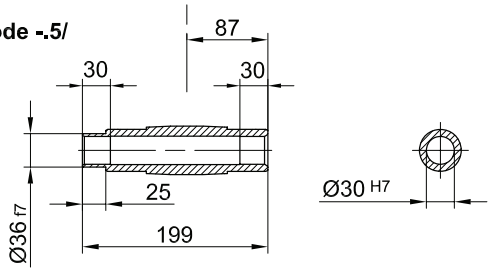

Code -.3/

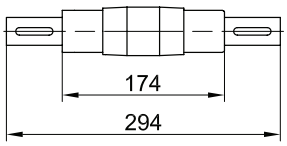

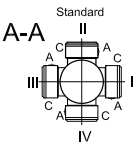

Flanschmasse

BS10G..	k	l	m	n	o	p	q	s	t
Standard -3.V/	200	165	130	12	11	190	108	3.5	39
klein -2.V/	160	130	110	10	9	183	101	3.5	46

Typ	a	b	c	d	e	i	Ausführung mit Motoranbauten				
							i_{TB}	ES../ZS..	G	ES../ZS..-G	RR/RL
								d_{ML}	d_{ML}	d_{ML}	d_{ML}
BS10G06-../D04..	143	195	111	511	12	90	124.5	554.5	573.5	617	-
BS10G06-../D05..	170	197	123	541	12	100	129.5	582	644	685	-
BS10G06-../D06..	170	197	123	541	12	100	131.5	582	644	685	-
BS10G06-../D07..	190	197	123	561	12	100	131.5	602	664	705	-
BS10G06-../D..08..	200	241	156	614	12	115	149.5	680	721	787	680

The actual gearbox design can vary from the geometry shown.

BS10G06

Drehmomentstütze vorne

Code -5.V/

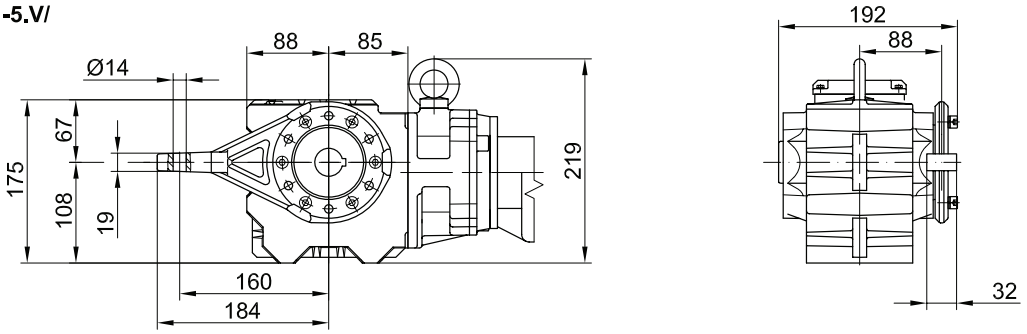

Flansch mit Gewindelöchern vorne

Code -7.V/

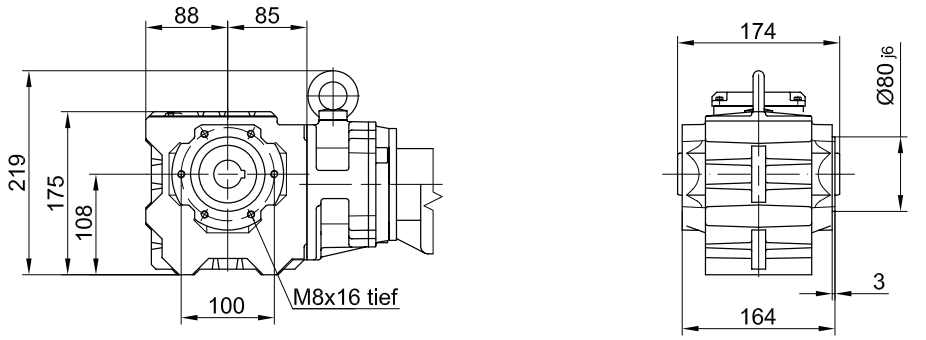

Fuss mit Gewindelöchern unten

Code -6.U/

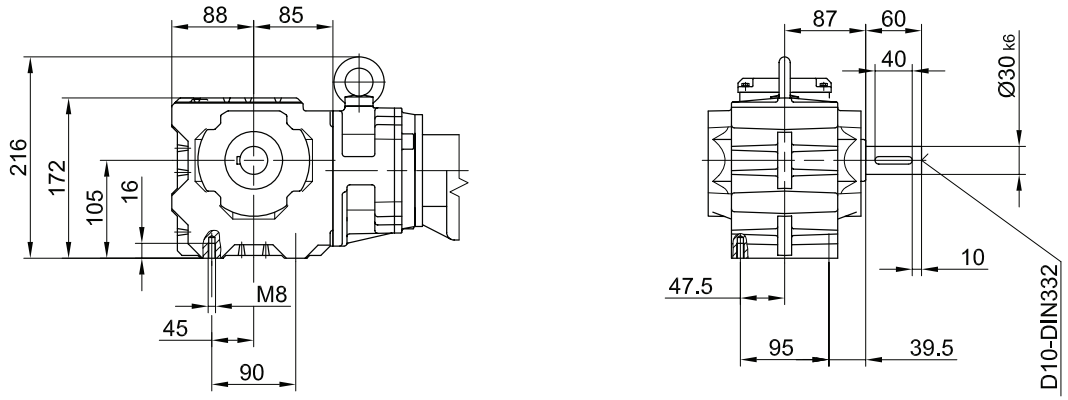

Fuss mit Durchgangslöchern unten

Code -1.U/

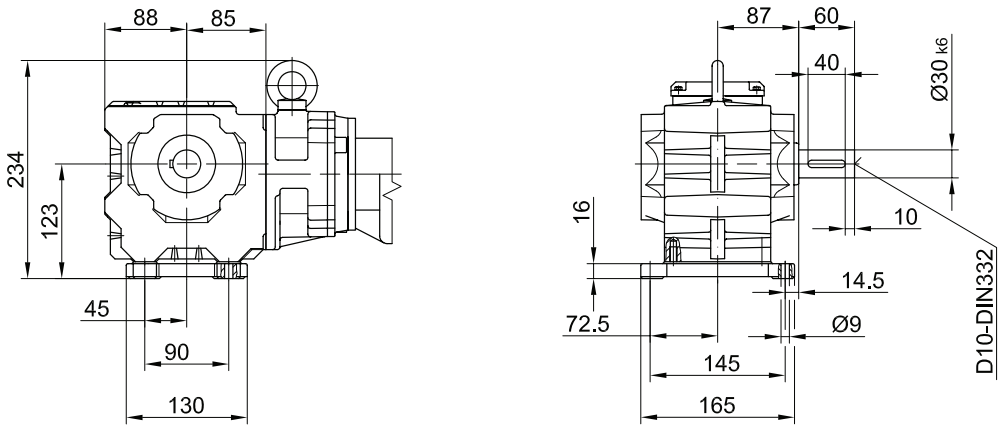

The actual gearbox design can vary from the geometry shown.

BS20G06

Flansch mit Durchgangslöchern vorne

Code -3.V/
(Code -4.V/)
(Code -2.V/)

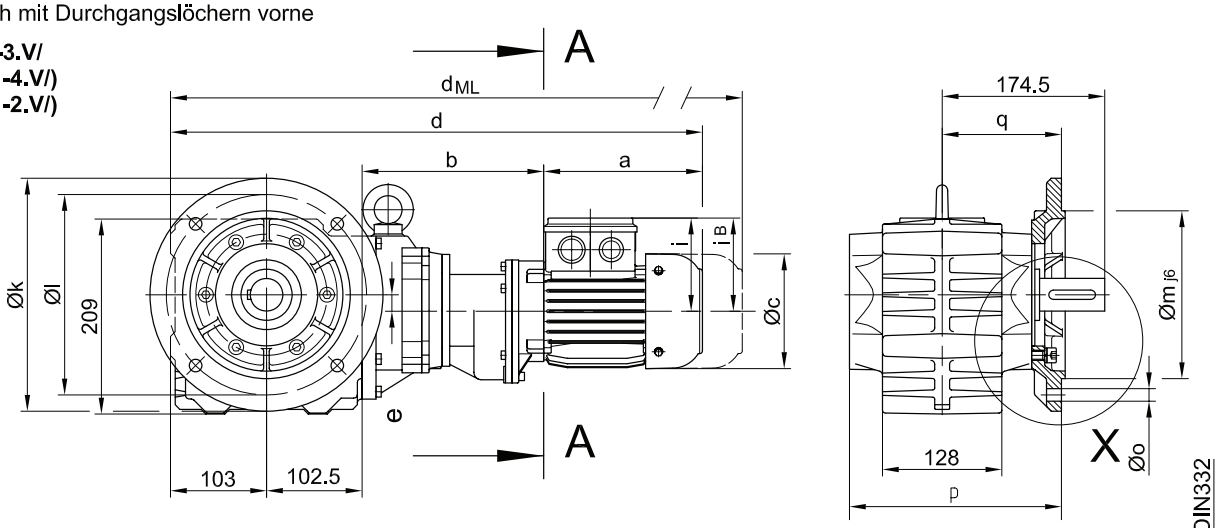

Code -.4/

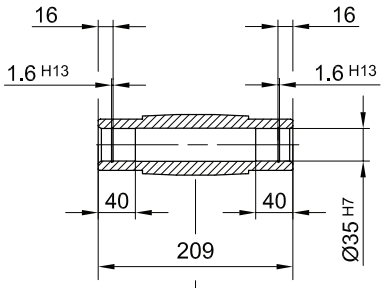

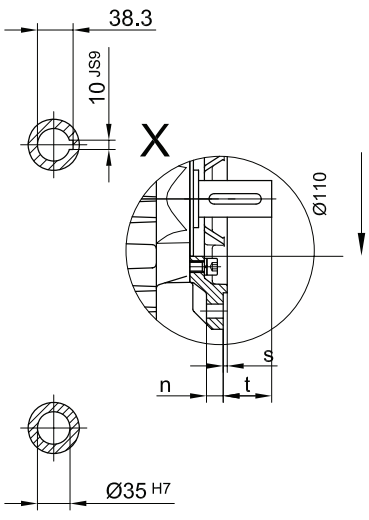

Code -.1/

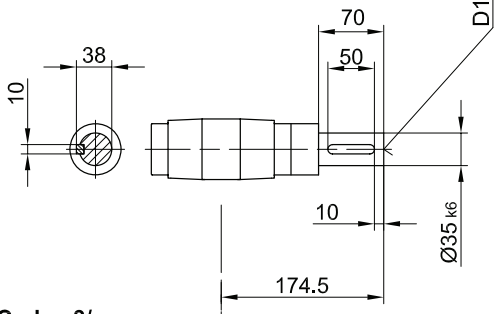

Code -.5/

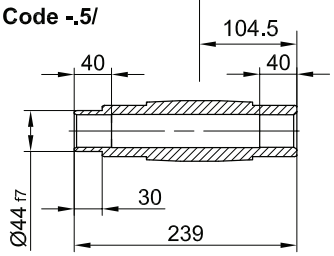

Code -.3/

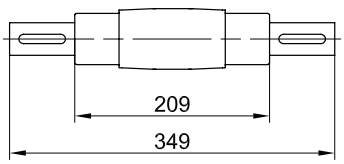

13

Flanschmasse

BS20G..	k	l	m	n	o	p	q	s	t
Standard -3.V/	250	215	180	16	13.5	227.5	128	4	46.5
klein -2.V/	200	165	130	12	11	224.5	125	3.5	49.5
gross -4.V/	300	265	230	20	13.5	233.5	134	4	40.5

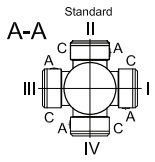

Typ	a	b	c	d	e	i	Ausführung mit Motoranbauten				
							i_B	ES../ZS..	G	ES../ZS..-G	RR/RL
								d_{ML}	d_{ML}	d_{ML}	d_{ML}
BS20G06-../D04..	143	193	111	541	18	90	90	584.5	603.5	647	-
BS20G06-../D05..	170	195	123	571	18	100	100	612	674	715	-
BS20G06-../D06..	170	195	123	571	18	100	100	612	674	715	-
BS20G06-../D07..	190	195	123	591	18	100	100	632	694	735	-
BS20G06-../D..08..	200	239	156	644	18	115	115	710	751	817	633

The actual gearbox design can vary from the geometry shown.

BS20G06

Drehmomentstütze vorne

Code -5.V/

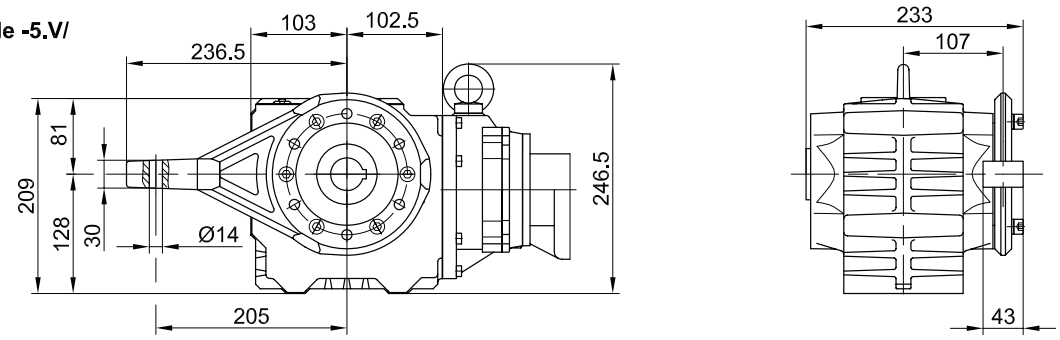

Flansch mit Gewindelöchern vorne

Code -7.V/

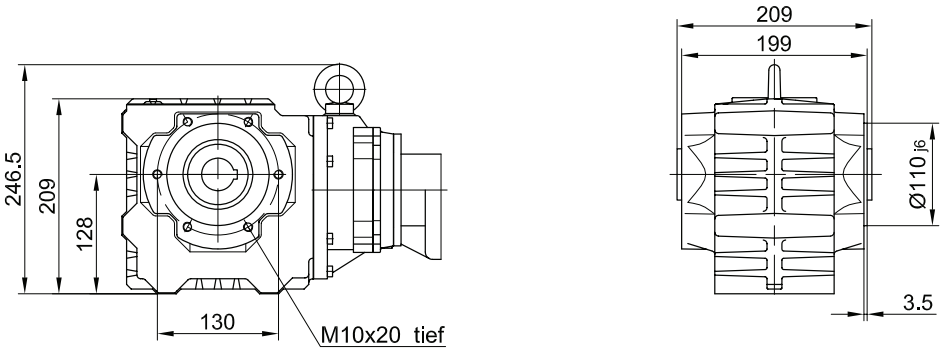

Fuss mit Gewindelöchern unten

Code -6.U/

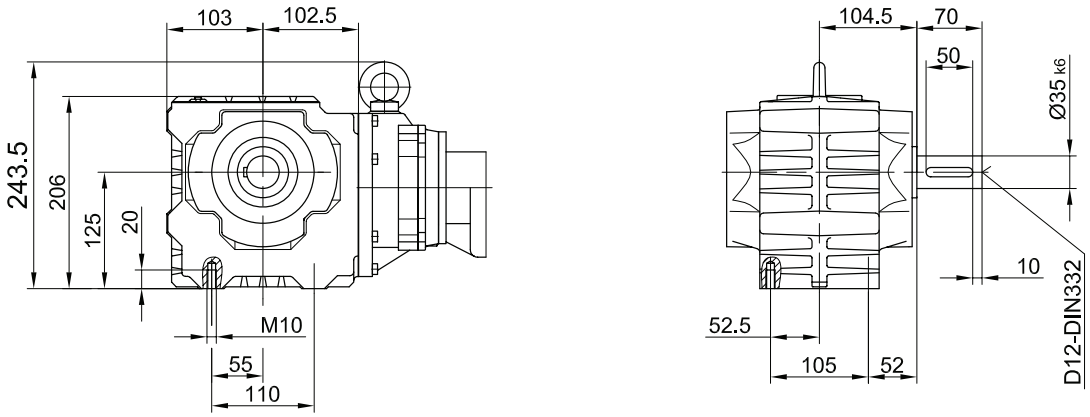

Fuss mit Durchgangslöchern unten

Code -1.U/

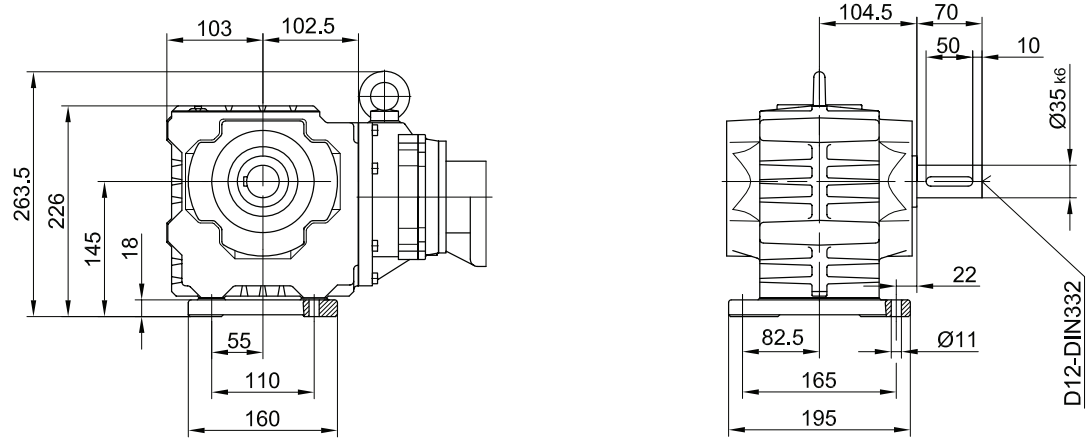

The actual gearbox design can vary from the geometry shown.

BS30G06

Flansch mit Durchgangslöchern vorne

Code -3.V/
(Code -4.V/)

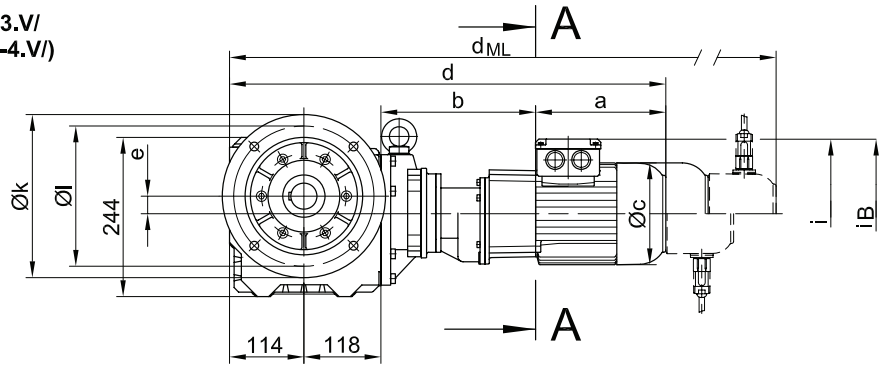

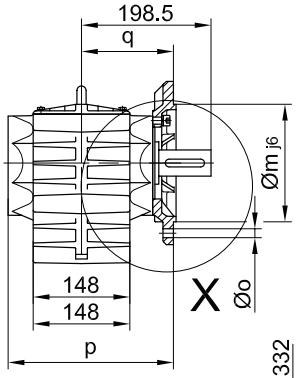

Code -.4/

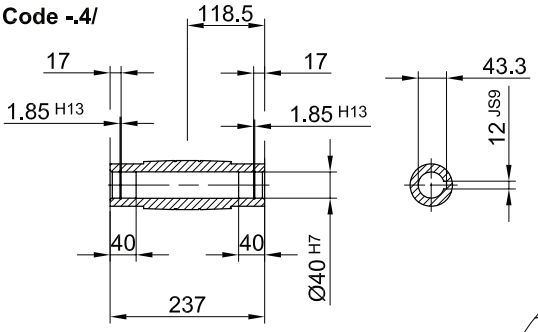

Code -.1/

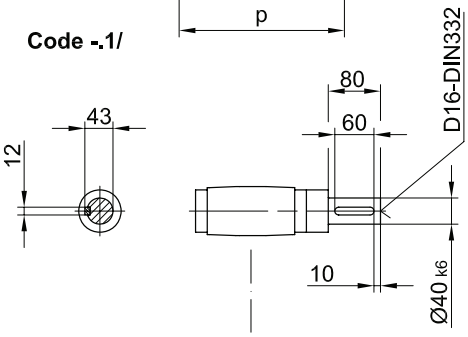

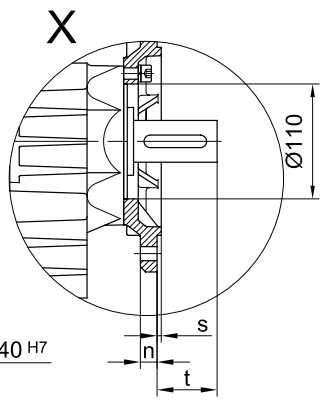

Code -.5/

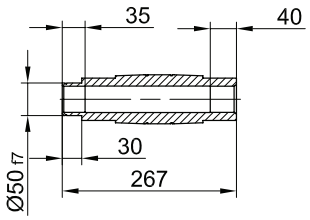

Code -.3/

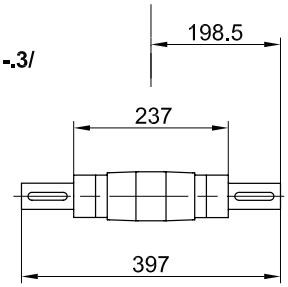

13

Flanschmasse

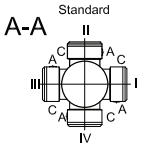

BS30G..	k	l	m	n	o	p	q	s	t
Standard -3.V/	250	215	180	16	13.5	253.5	141	4	57.5
gross -4.V/	300	265	230	20	13.5	259.5	147	4	51.5

Typ	a	b	c	d	e	i	i_B	Ausführung mit Motoranbauten			
								ES../ZS..	G	ES../ZS..-G	RR/RL
								d_{ML}	d_{ML}	d_{ML}	d_{ML}
BS30G06-../D04..	143	191	111	566	27	90	90	609.5	628.5	672	-
BS30G06-../D05..	170	193	123	596	27	100	100	637	699	740	-
BS30G06-../D06..	170	193	123	596	27	100	100	637	699	740	-
BS30G06-../D07..	190	193	123	616	27	100	100	657	739	760	-
BS30G06-../D..08..	200	237	156	669	27	115	115	735	776	842	735

The actual gearbox design can vary from the geometry shown.

BS30G06

Drehmomentstütze vorne

Code -5.V/

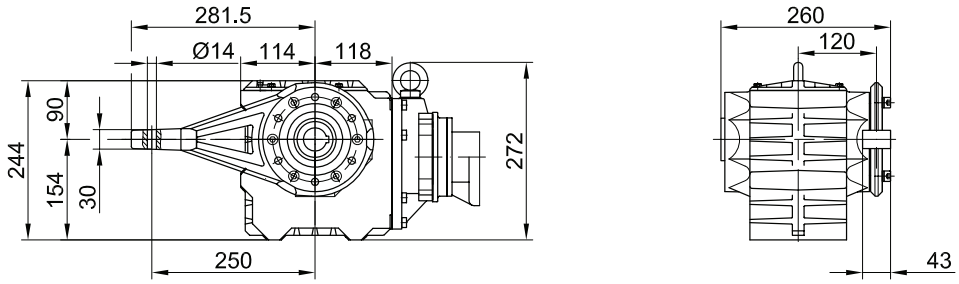

Flansch mit Gewindelöchern vorne

Code -7.V/

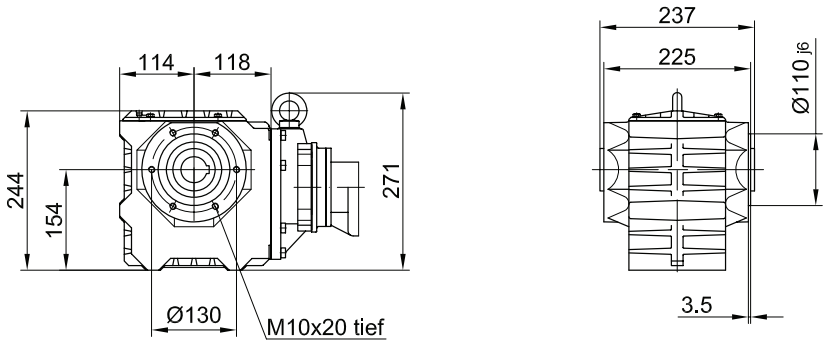

Fuss mit Gewindelöchern unten

Code -6.U/

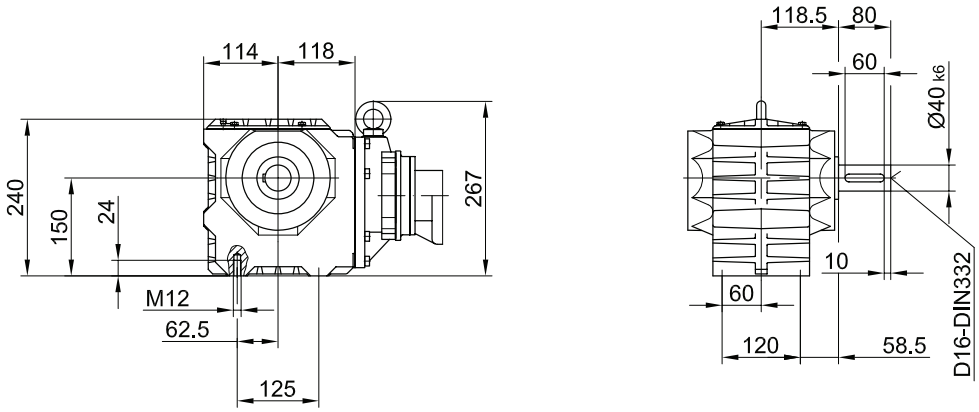

Fuss mit Durchgangslöchern unten

Code -1.U/

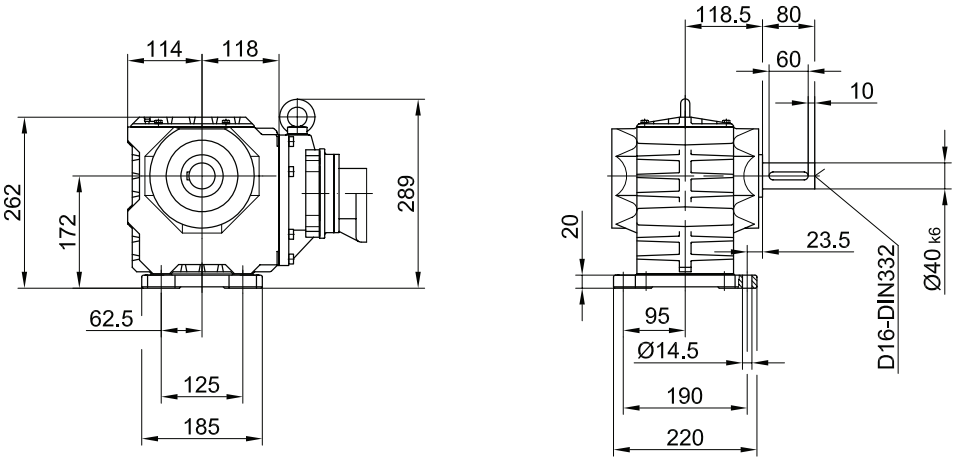

The actual gearbox design can vary from the geometry shown.

BS40G10

Flansch mit Durchgangslöchern vorne
Code -3.V/

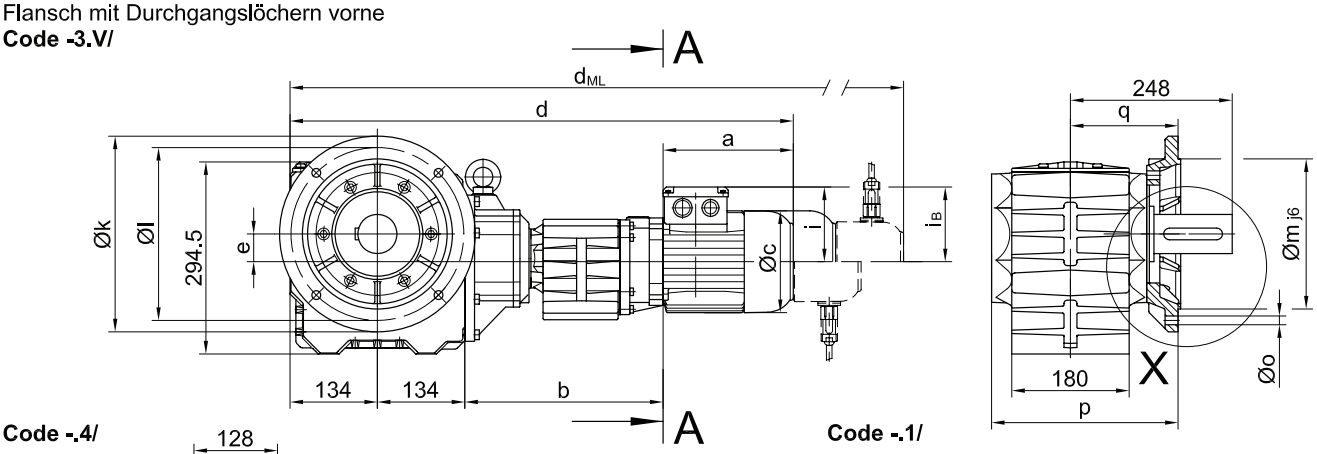

Code -.4/

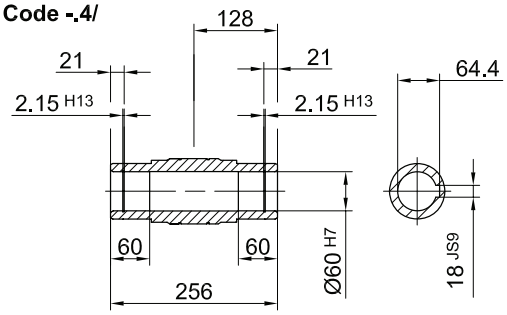

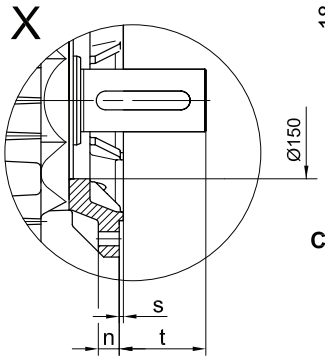

Code -.1/

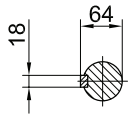

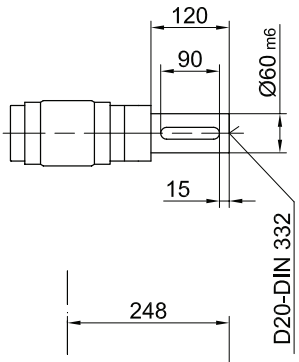

Code -.5/

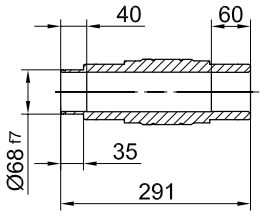

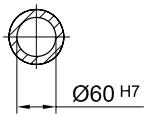

Code -.3/

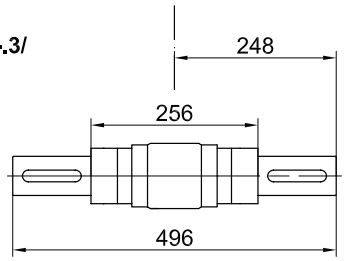

13

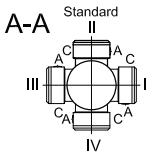

Flanschmasse

BS40G..	k	l	m	n	o	p	q	s	t
Standard -3.V/	300	265	230	20	13.5	286	165	4	83

Typ	a	b	c	d	e	i	i_B	Ausführung mit Motoranbauten			
								ES../ZS..	G	ES../ZS..-G	RR/RL
								d_{ML}	d_{ML}	d_{ML}	d_{ML}
BS40G10-../D05..	170	300	123	739	43	100	100	780	842	883	-
BS40G10-../D06..	170	300	123	739	43	100	100	780	842	883	-
BS40G10-../D07..	190	300	123	759	43	100	100	800	862	903	-
BS40G10-../D..08..	200	304	156	772	43	115	115	838	879	945	838
BS40G10-../D..09..	251	318.5	181	837	43	124	124	924	944	1031	924

The actual gearbox design can vary from the geometry shown.

BS40G10

Drehmomentstütze vorne
Code -5.V/

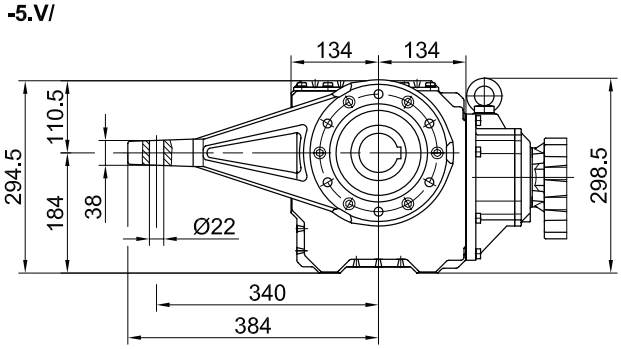

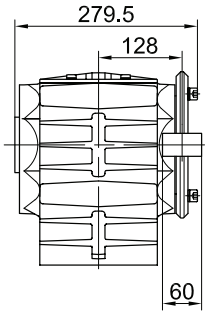

Flansch mit Gewindelöchern vorne
Code -7.V/

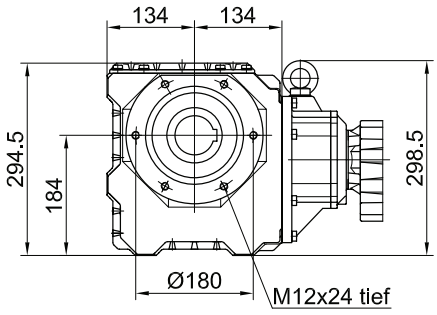

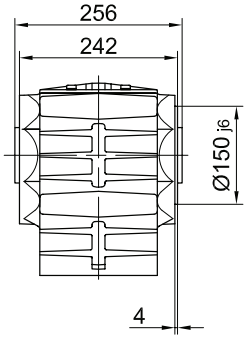

Fuss mit Gewindelöchern unten
Code -6.U/

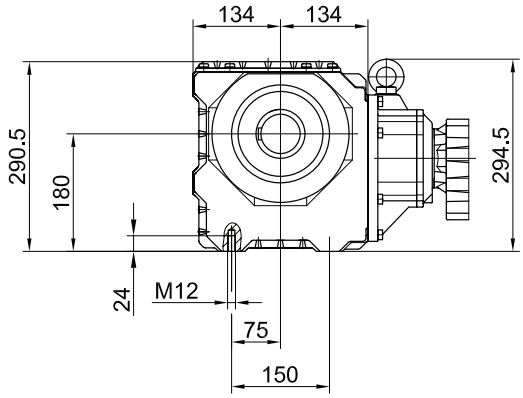

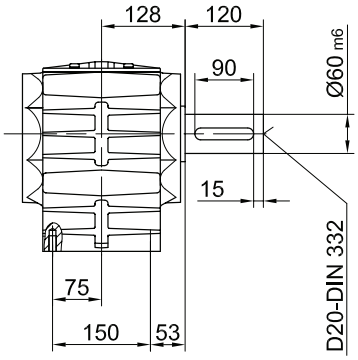

Fuss mit Durchgangslöchern unten
Code -1.U/

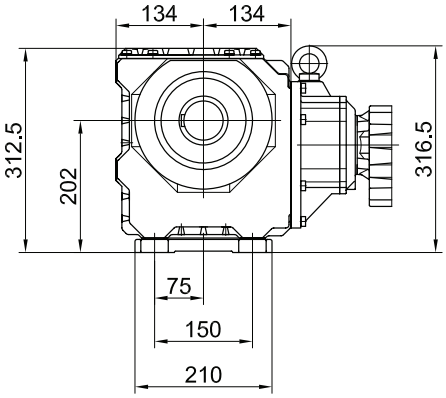

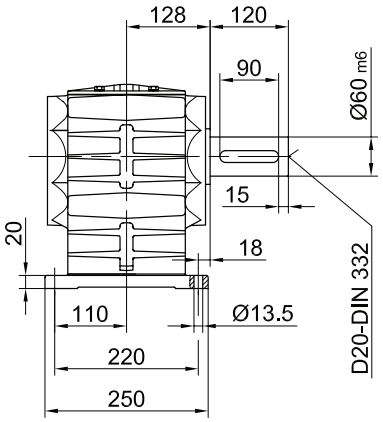

The actual gearbox design can vary from the geometry shown.

Shrink disc couplings (SSV)

(Code BS10-.5/...)

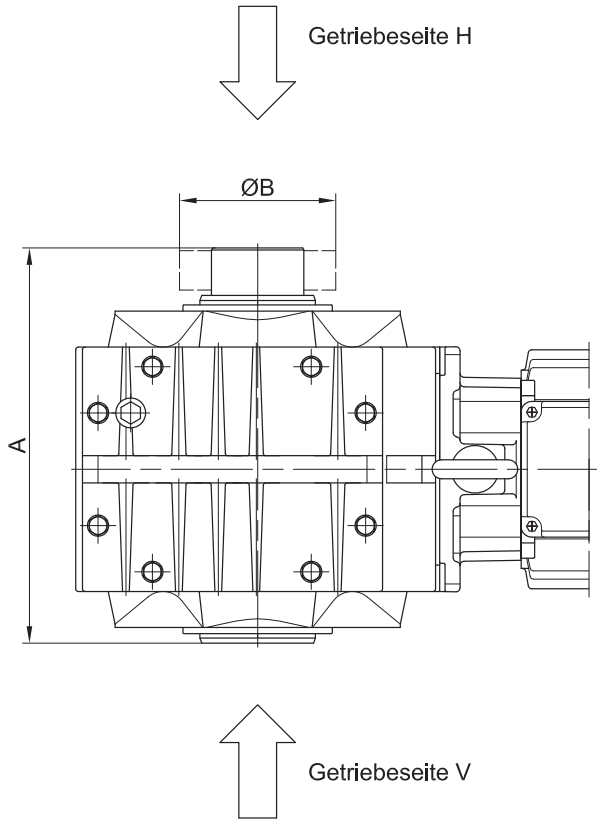

Typ	SSV Ringfeder	SSV STÜWE	A	B
BS10	RfN 4161 036x072	HSD 36-22x36	199	72
BS20	RfN 4161 044x080	HSD 44-22x44	239	80
BS30	RfN 4161 050x090	HSD 50-22x50	267	90
BS40	RfN 4161 062x110	HSD 68-22x68	291	115

The actual gearbox design can vary from the geometry shown.

Shrink disc couplings with (SSV) cover

(Code BS10-.5A/...)

(Code BS10Z-.5A/...)

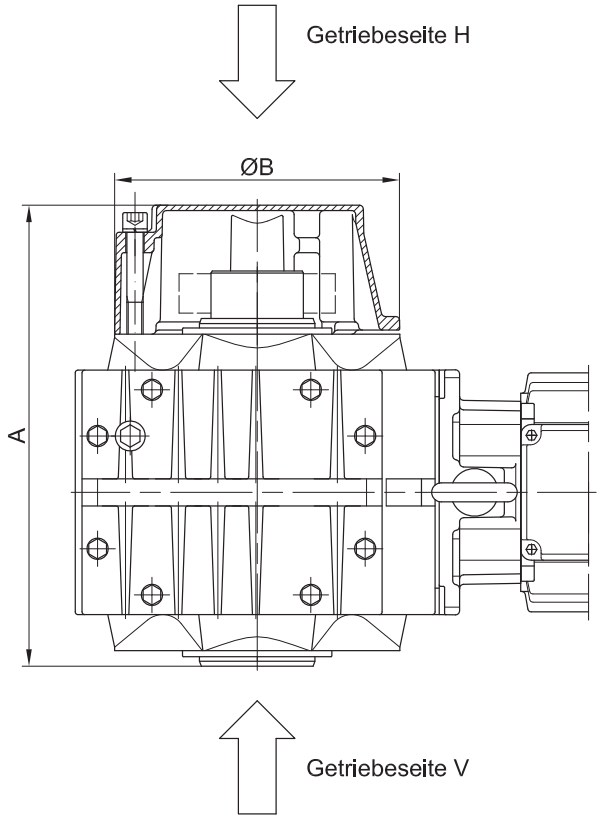

Typ	SSV Ringfeder	SSV STÜWE	A	B
BS10	RfN 4161 036x072	HSD 36-22x36	221	120
BS20	RfN 4161 044x080	HSD 44-22x44	286	160
BS30	RfN 4161 050x090	HSD 50-22x50	313	160
BS40	RfN 4161 062x110	HSD 68-22x68	340	210

The actual gearbox design can vary from the geometry shown.

Rubber buffer for torque restraint

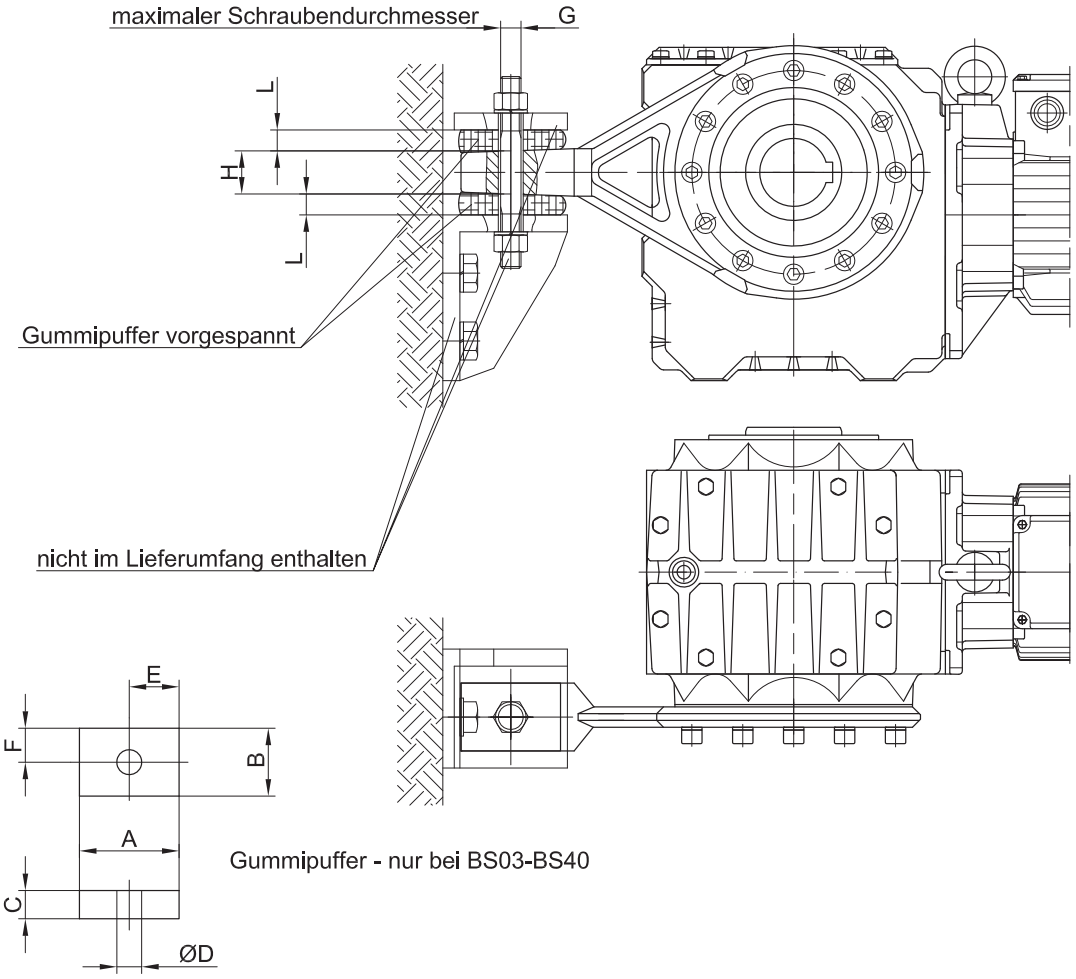

Werkstoff: Naturkautschuk
Härte 50±5 Shore A

Abmessungen des Querlochs:
Siehe Maßbild des jeweiligen Getriebes

Getriebe	Pos.	Masse (mm)								
		A	B	C	D	E	F	G	H	L
BS02	-	-	-	-	-	-	-	M8	6	-
BS03	Pos.0	30	30	12	12	15	15	M8	10	10.5
BS04	Pos.0	30	30	12	12	15	15	M8	10	10.5
BS06	Pos.0	30	30	12	12	15	15	M10	10	10
BS10	Pos.1	48	32	15	14	24	16	M10	19	13
BS20	Pos.2	63	43	20	14	31.5	21.5	M10	30	17.5
BS30	Pos.2	63	43	20	14	31.5	21.5	M10	30	17
BS40	Pos.3	88	60	25	22	44	30	M18	38	22

The actual gearbox design can vary from the geometry shown.

Position of the torque arm

BS02 / BS03

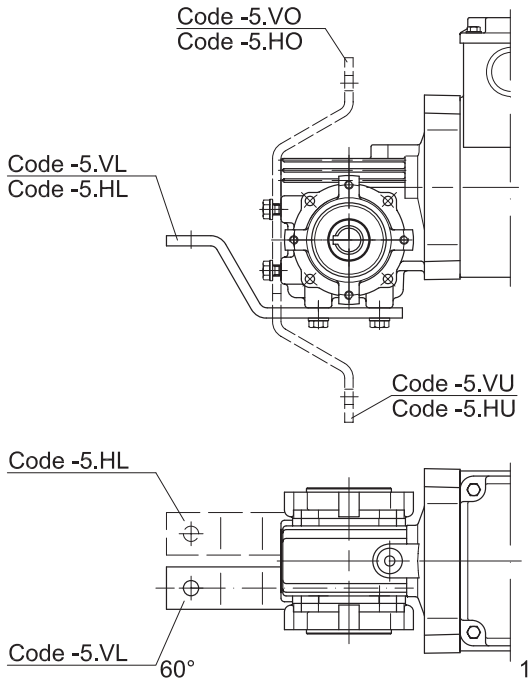

BS04 / BS06

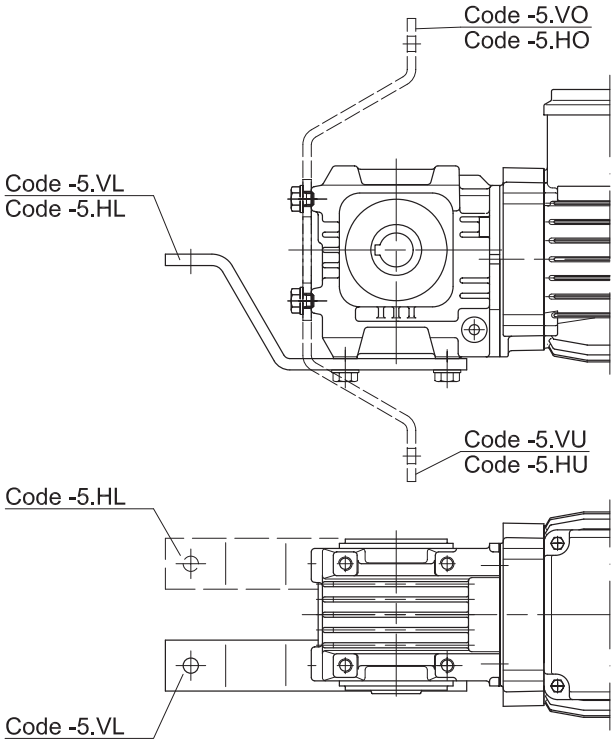

BS10 - BS40

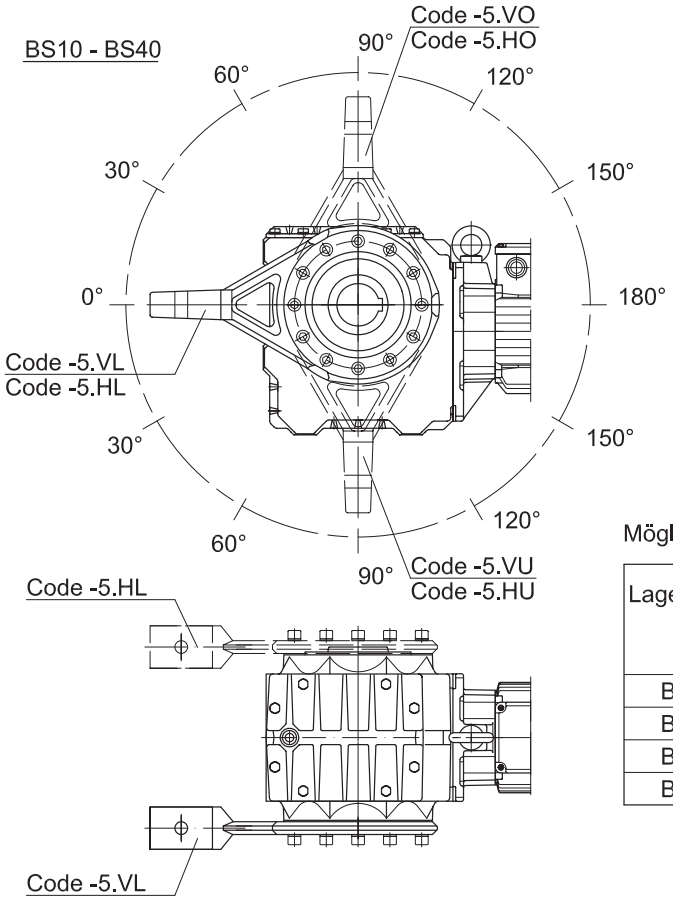

Mögliche Lagen.

Lage	VL / HL			VO / HO VU / HU			VR / HR
BS10	0°	30°	60°	90°	120°	150°	-
BS20	0°	30°	60°	90°	120°	150°	-
BS30	0°	30°	60°	90°	120°	150°	-
BS40	0°	30°	60°	90°	120°	150°	-

The actual gearbox design can vary from the geometry shown.

Threaded foot, left

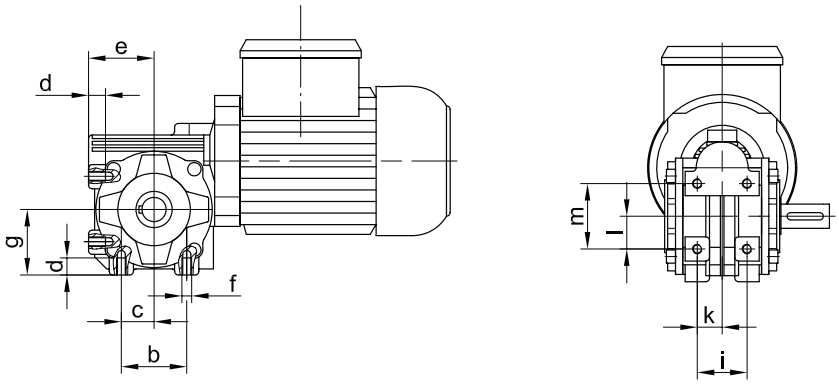

Typ	a	b	c	d	e	f	g	-	i	k	l	m
BS02	-	36	18	10	40	M6	40	-	32	16	18	36
BS03	-	54	27	14	54	M8	54	-	41	20.5	27	54

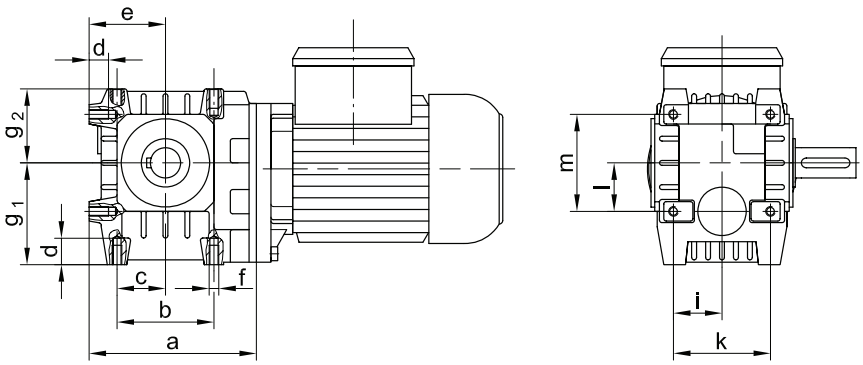

Typ	a	b	c	d	e	f	g_1	g_2	i	k	l	m
BS04	111	60	30	15.5	50	M8	64	49.5	30	60	30	60
BS06	138	80	40	16	63	M8	84	61	40	80	40	80

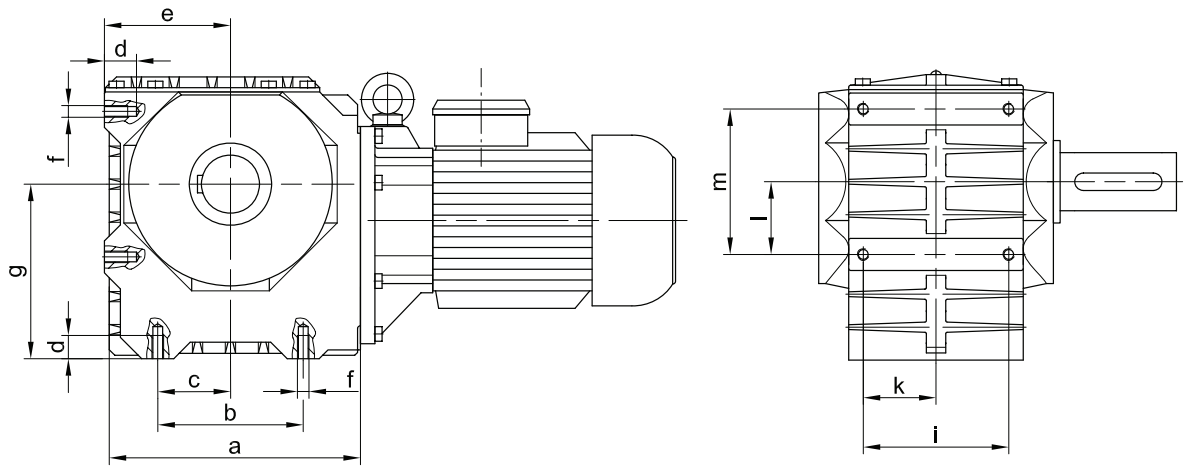

Typ	a	b	c	d	e	f	g	-	i	k	l	m
BS10-BS10Z	170	90	45	16	85	M8	105	-	95	47.5	45	90
BS20-BS20Z	202.5	110	55	20	100	M10	125	-	105	52.5	55	110
BS30-BS30Z	228	125	62.5	24	110	M12	150	-	120	60	62.5	125
BS40-BS40Z	264	150	75	24	130	M12	180	-	150	75	75	150

The actual gearbox design can vary from the geometry shown.

Foot plate, left

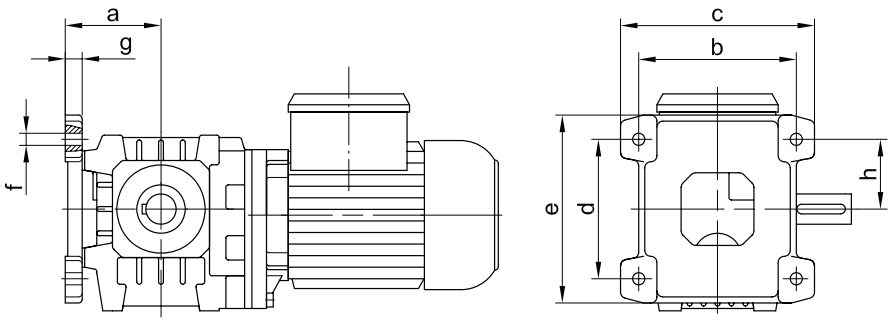

	a	b	c	d	e	f	g	h
BS04	68	110	140	90	130	10	15	45
BS06	79	130	160	115	155	10	14	57.5

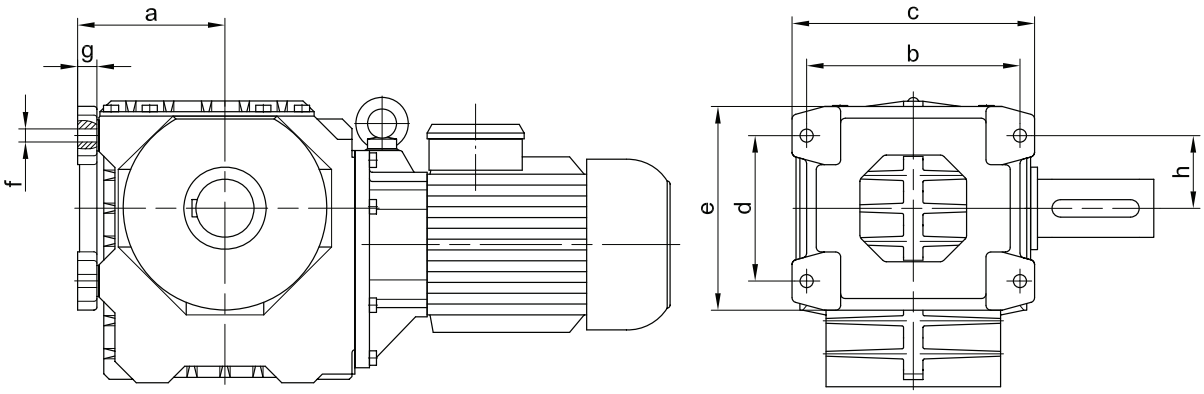

Typ	a	b	c	d	e	f	g	h
BS10-BS10Z	103	145	165	90	130	Ø9	16	72.5
BS20-BS20Z	120	165	195	110	160	Ø11	18	55
BS30-BS30Z	132	190	220	125	185	Ø13.5	20	62.5
BS40-BS40Z	152	220	250	150	210	Ø13.5	20	75

The actual gearbox design can vary from the geometry shown.

Tools for hollow shaft and keyway

Pos.1 Wellenzapfen

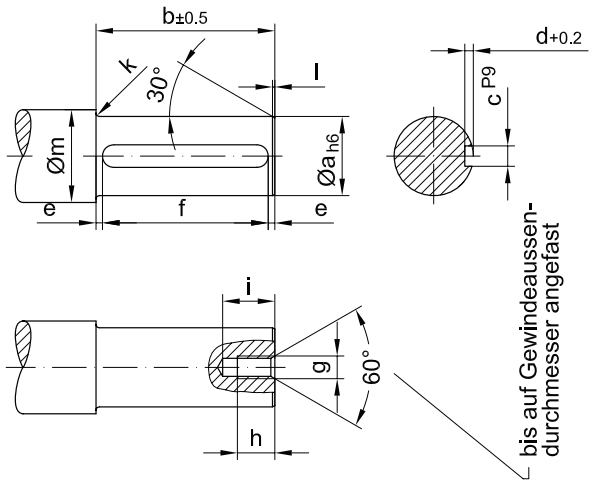

✳ Pos.2 Scheibe

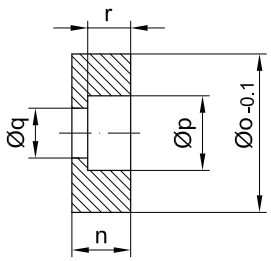

x, Kanten gebrochen
Werkstoff:
C45 DIN 17200

Typ	Masse (mm)																
	Pos.1 Wellenzapfen												Pos.2 Scheibe				
	a	b	c	d	e	f	g	h	i	k	l	m	n	o	p	q	r
BS03	20	75	6	3.5	6	$63^{+0.3}$	M6	16	21	2	1.5	28	13.5	19.8	11	6.6	6.5
BS04	20	71	6	3.5	7.5	$56^{+0.3}$	M6	16	21	2	1.5	28	13.5	19.8	11	6.6	6.5
BS06	25	99	8	4	9.5	$80^{+0.3}$	M8	18	24	2.5	1.5	33	13.5	24.8	15	9	8.5
BS10	30	152	8	4	6	$140^{+0.5}$	M10	20	26	3	1.5	38	15	29.8	18	11	10
BS20	35	186	10	5	13	$160^{+0.5}$	M10	20	26	3	1.5	43	16	34.8	18	11	10
BS30	40	212	12	5	6	$200^{+0.5}$	M12	22	29	3	2	48	18	39.8	20	13.5	12
BS40	60	227	18	7	13.5	$200^{+0.5}$	M20	38	46	3.5	2	68	24	59.8	33	22	18

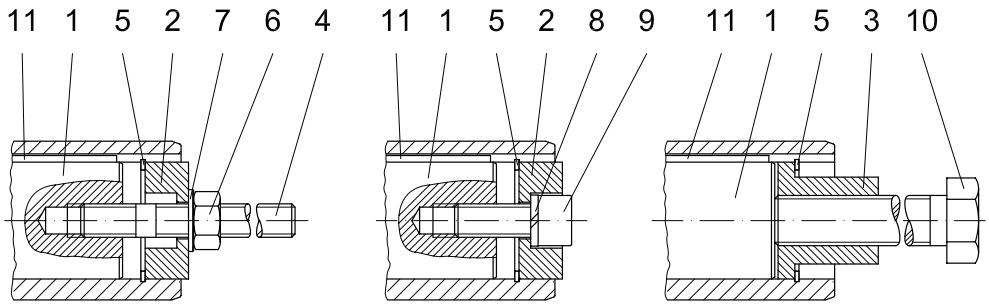

Die dargestellten Teile werden zur Montage benötigt. NUR ✳ gekennzeichneten Teile sind im Montagehilfeset enthalten.

Tools for hollow shaft and keyway

Pos.3 Hülse

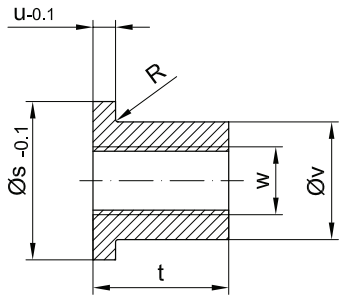

$\sqrt{^{x}}$, Kanten gebrochen
Werkstoff: C45 DIN 17200

Pos.4 Gewindebolzen

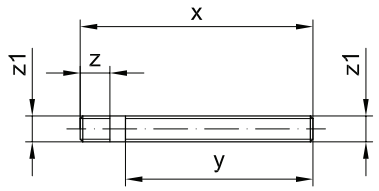

Werkstoff: Stahl, Zugfestigkeit ³
1000N/mm²
Gewinde gerollt

Typ	Masse (mm)										✳ Sicherungsring DIN 472	Sechskantmutter DIN 934-8	Scheibe DIN 125-St	Federring DIN 7980	✳ Zylinderschraube DIN 912-8.8	Sechskantschraube DIN EN 24017-8.8	Passfeder DIN 6885 Breite x Höhe x Länge
	Pos.3 Hülse						Pos.4 Gewindebolzen										
	s	t	u	v	w	R	x	y	z	z1	Pos.5	Pos.6	Pos.7	Pos.8	Pos.9	Pos.10	Pos.11
BS03	19.8	24	5	11	M8	-	120	90	18	M6	20x1.0	M6	6.4	6	M6x25	M8x110	A 8x7x63
BS04	19.8	24	5	11	M8	-	120	90	18	M6	20x1.0	M6	6.4	6	M6x25	M8x110	A 8x7x56
BS06	19.8	24	5	15.4	M12	0.8	150	120	20	M8	25x1.2	M8	8.4	8	M8x30	M12x140	A 8x7x80
BS10	29.8	28	5	19.8	M14	0.8	210	175	23	M10	30x1.2	M10	10.5	10	M10x30	M14x190	A 8x7x140
BS20	34.9	28	5	23	M14	-	250	215	23	M10	35x1.5	M10	10.5	10	M10x35	M14x230	A10x8x160
BS30	39.9	40	6	27.7	M20	0.8	280	240	28	M12	40x1.75	M12	13	12	M12x35	M20x270	A 12x8x200
BS40	59.8	60	6	44	M30	-	320	260	45	M20	60x2.0	M20	21	20	M20x50	M30x310	A 18x11x200

Die dargestellten Teile werden zur Montage benötigt. NUR ✳ gekennzeichneten Teile sind im Montagehilfeset enthalten.

Optional:

Typ	Bestelltext
BS03	Id.Nr.4104013 Montagehilfe "halten"
BS04	Id.Nr.4104013 Montagehilfe "halten"
BS06	Id.Nr.4103921 Montagehilfe "halten"
BS10	Id.Nr.4103939 Montagehilfe "halten"
BS20	Id.Nr.4103947 Montagehilfe "halten"
BS30	Id.Nr.4103955 Montagehilfe "halten"
BS40	Id.Nr.4103971 Montagehilfe "halten"

Sealing Cap (VK)

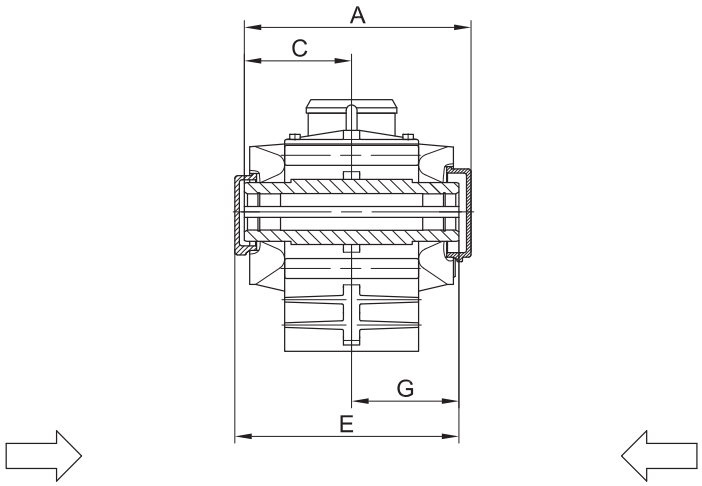

Getriebeseite HINTEN (H)

Getriebeseite VORNE (V)

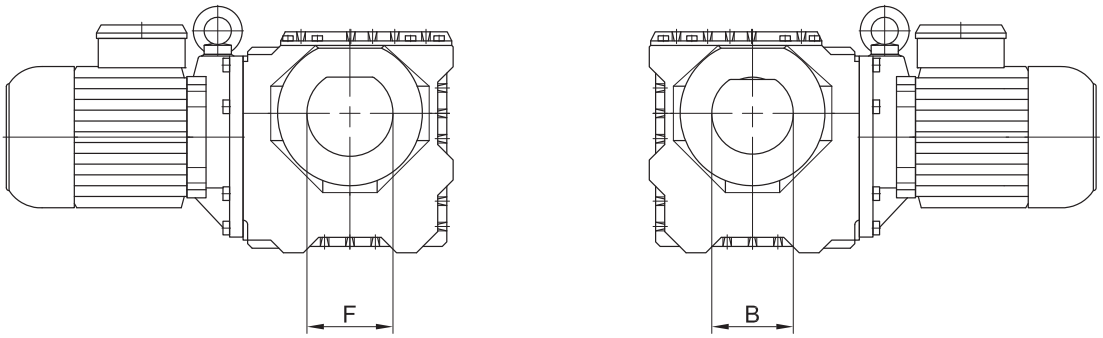

Verschlusskappe HINTEN			
	E	F	G
BS10	186	68	87
BS30	250.5	100	132
BS40	276	130	128

Verschlusskappe VORNE			
Typ	A	B	C
BS20	221	78	104.5

Sealing Cover (VD)

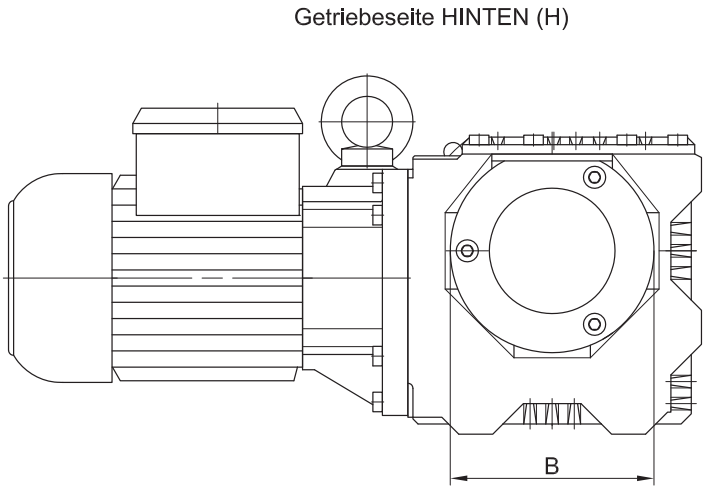

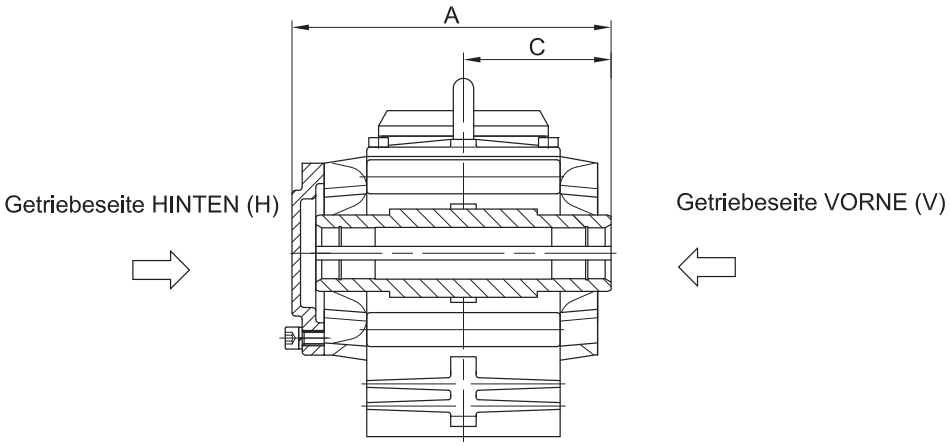

Typ	A	B	C
BS04	99.5	68	46.5
BS06	128.5	81	60.5
BS10	185	Ø120	87
BS20	224.5	Ø160	104.5
BS30	251.5	Ø160	118.5
BS40	275	Ø210	128

14

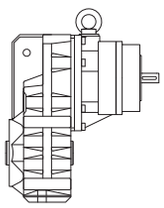

Page

Dimensional drawings of input group 589-674

Input Group SN
- Helical Gears
- Parallel Shaft Gears
- Bevel Gears
- Worm Gears

Input Group C/IEC

Input group

Dimensions of input group helical geared motors SN

BG10-BG10Z-SN

Fussausführung mit Durchgangslöchern

Code -11/

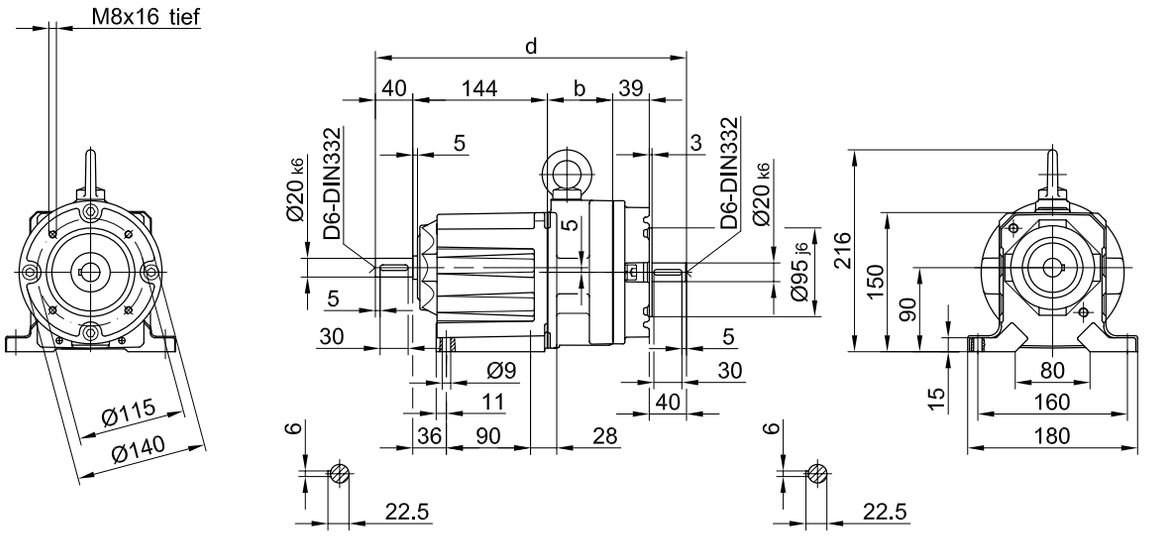

Flansch mit Durchgangslöchern

Code -37/

(Code -27/)

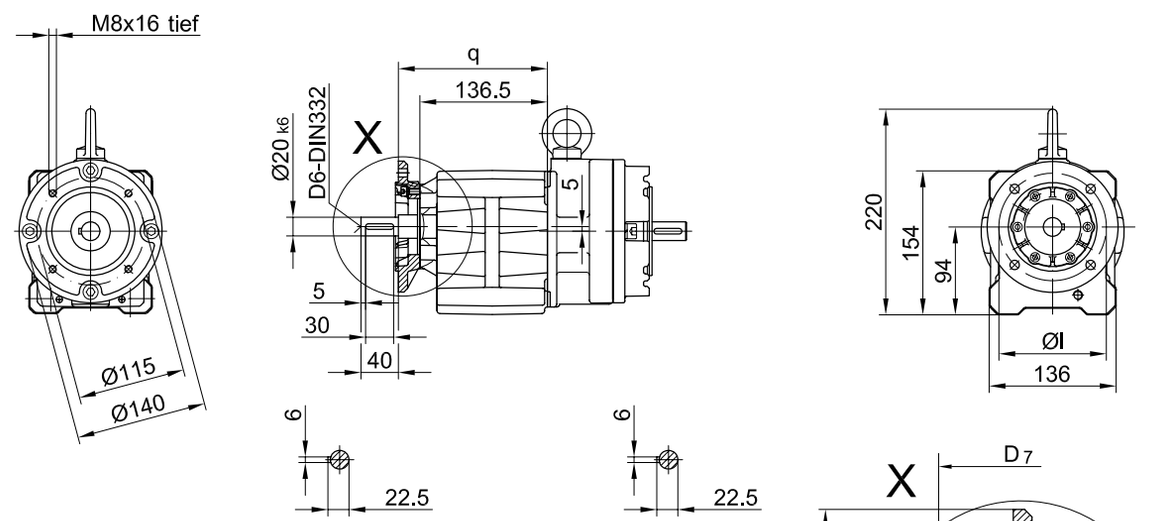

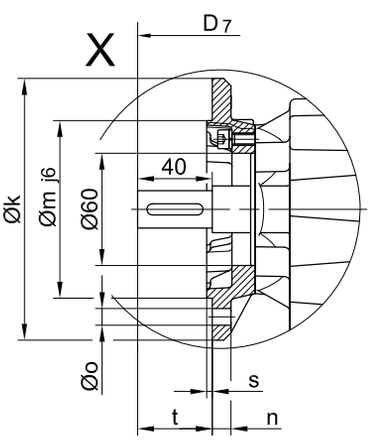

	b	d
BG10	70	333
BG10Z	136	399

Flanschmasse

BG10(Z)	k	l	m	n	o	q	s	t	D_7
Standard -37/	140	115	95	10	9	159.5	3	40	d+15.5
klein -27/	120	100	80	8	6.6	154.5	3	45	d+15.5

The actual gearbox design can vary from the geometry shown.

BG10-BG10Z-SN

Flansch mit Gewindelöchern

Code -71/

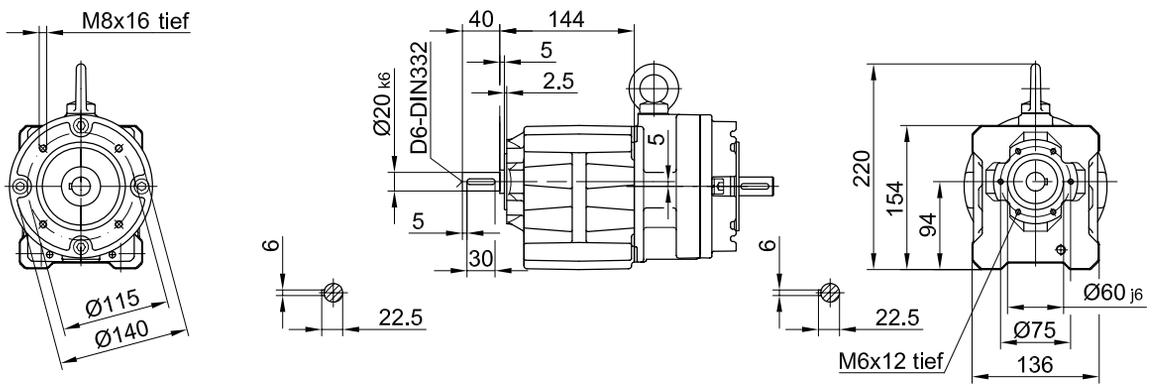

Fuss mit Gewindelöchern links und rechts

Code -61LR/

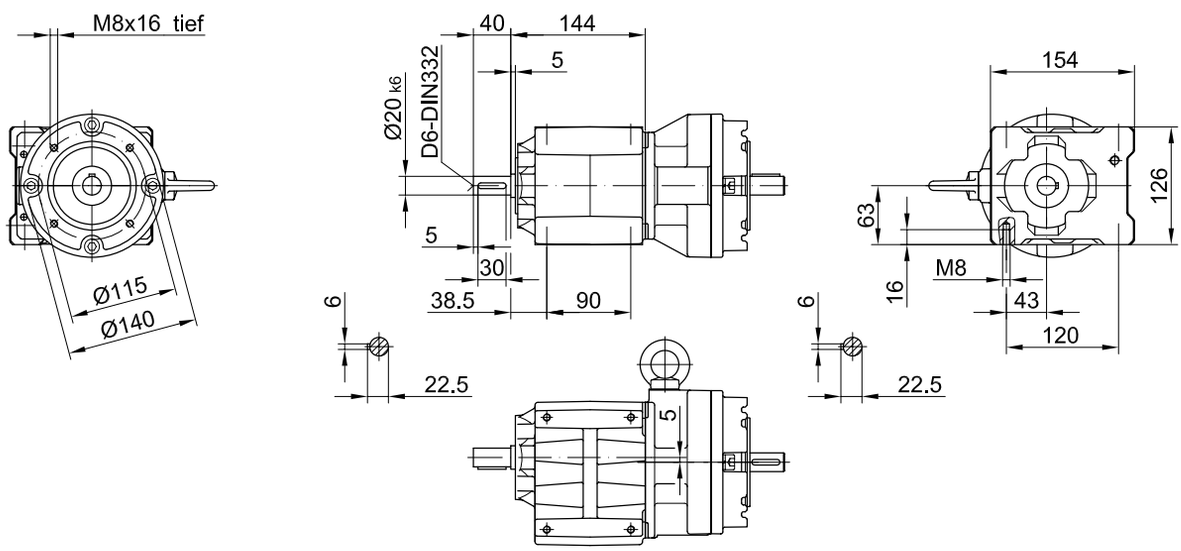

Fussplatte links

Code -91L/

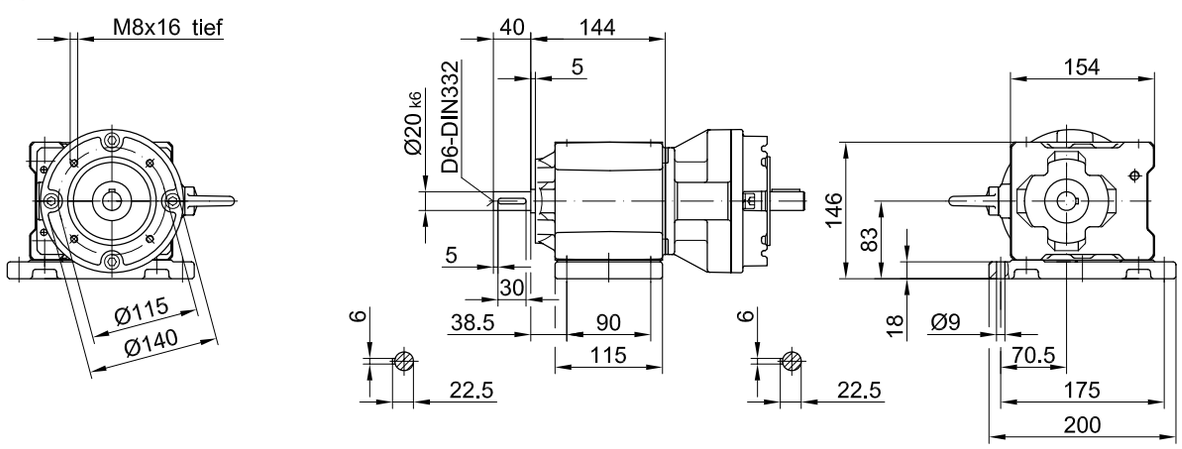

The actual gearbox design can vary from the geometry shown.

Input group

Dimensions of input group helical geared motors SN

BG10X-BG10XZ-SN

Fussausführung mit Durchgangslöchern

Code -11/

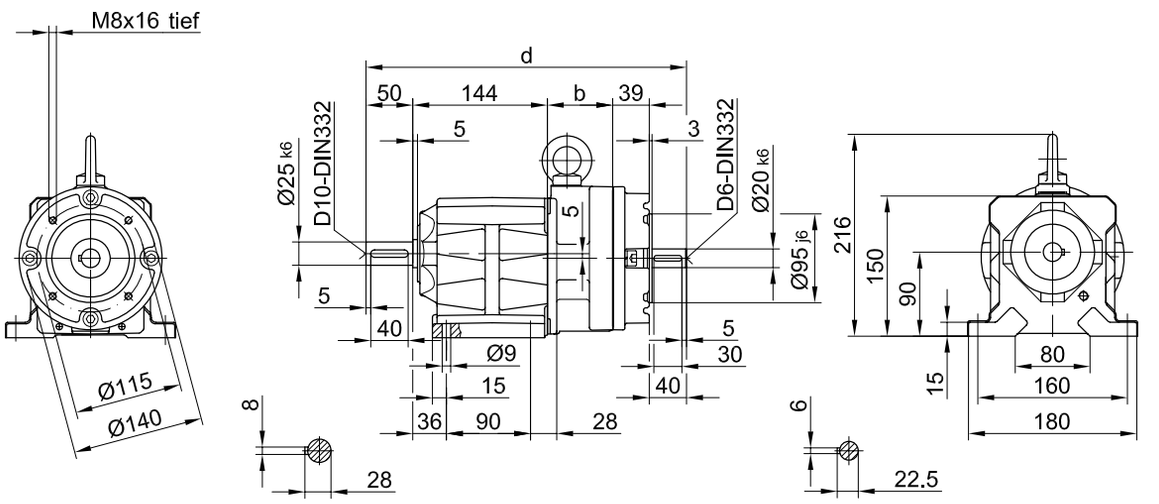

Flansch mit Durchgangslöchern

Code -37/

(Code -27/)

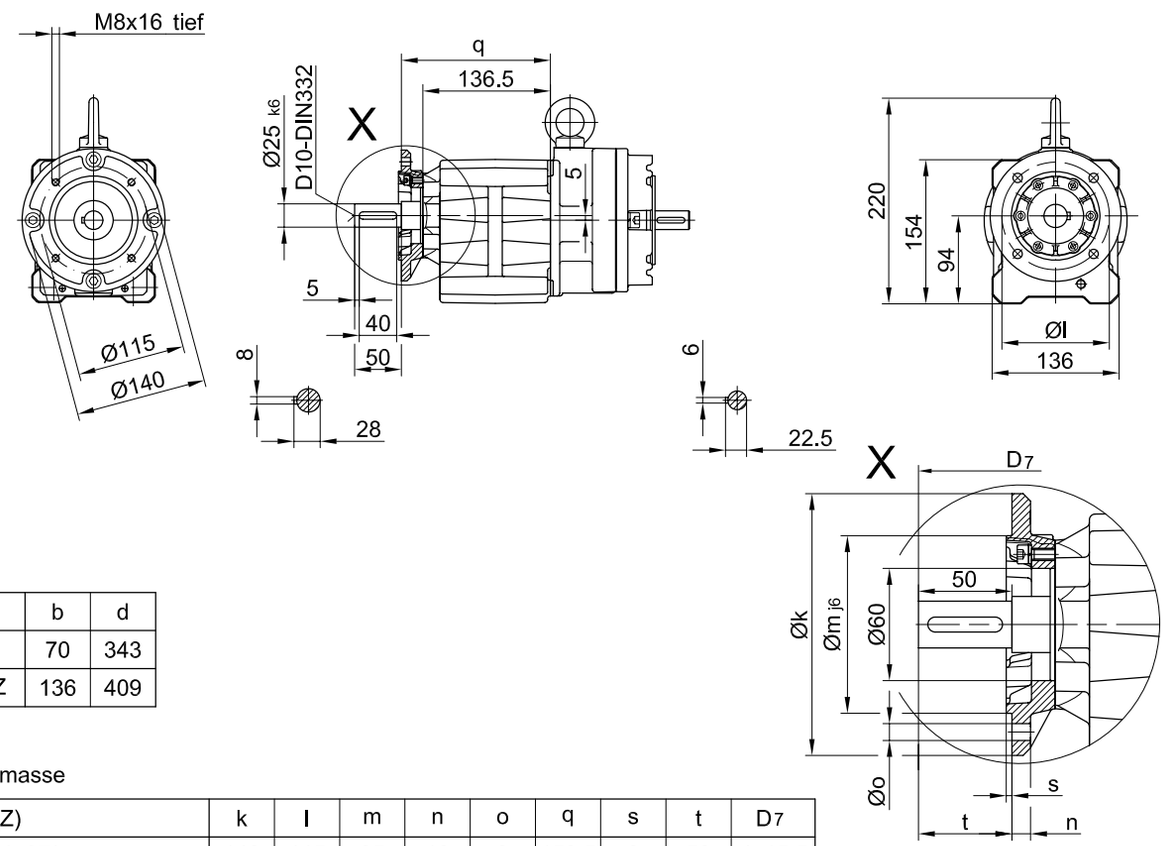

	b	d
BG10X	70	343
BG10XZ	136	409

Flanschmasse

BG10X(Z)	k	l	m	n	o	q	s	t	D7
Standard -37/	140	115	95	10	9	159.5	3	50	d+15.5
klein -27/	120	100	80	8	6.6	154.5	3	55	d+15.5

The actual gearbox design can vary from the geometry shown.

BG10X-BG10XZ-SN

Flansch mit Gewindelöchern

Code -71/

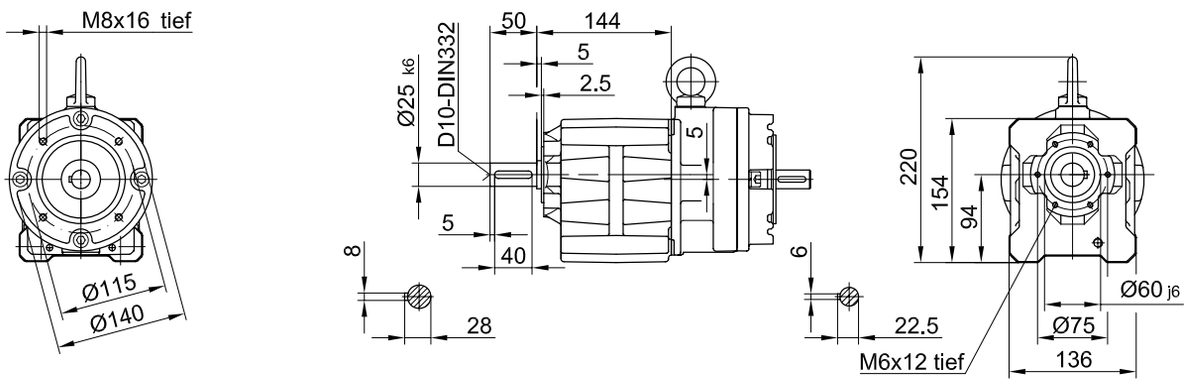

Fuss mit Gewindelöchern links und rechts

Code -61LR/

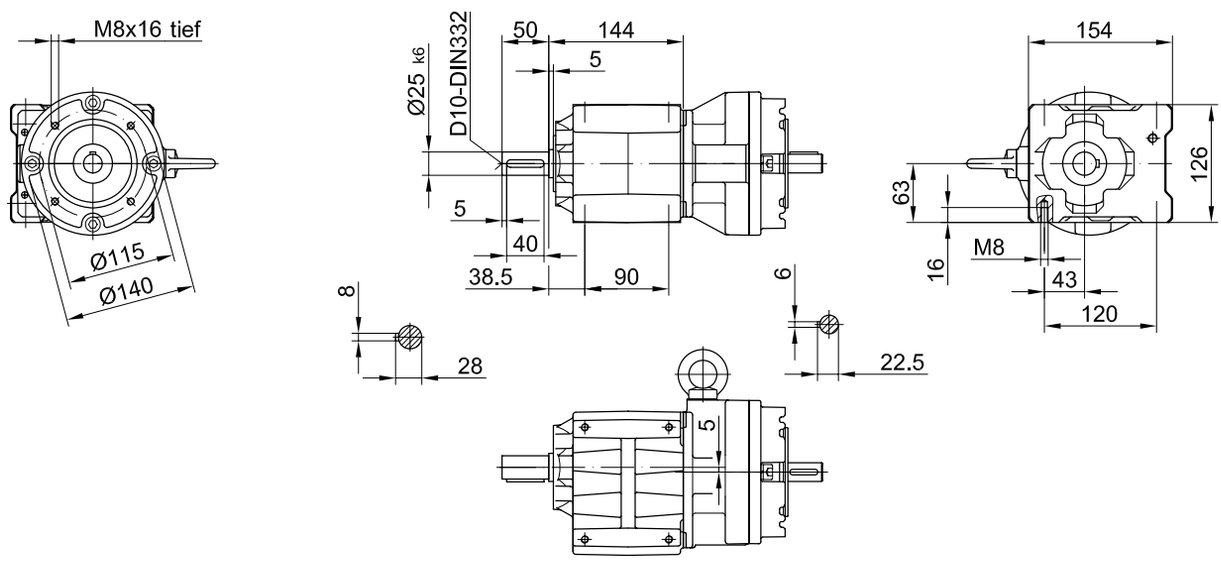

Fussplatte links

Code -91L/

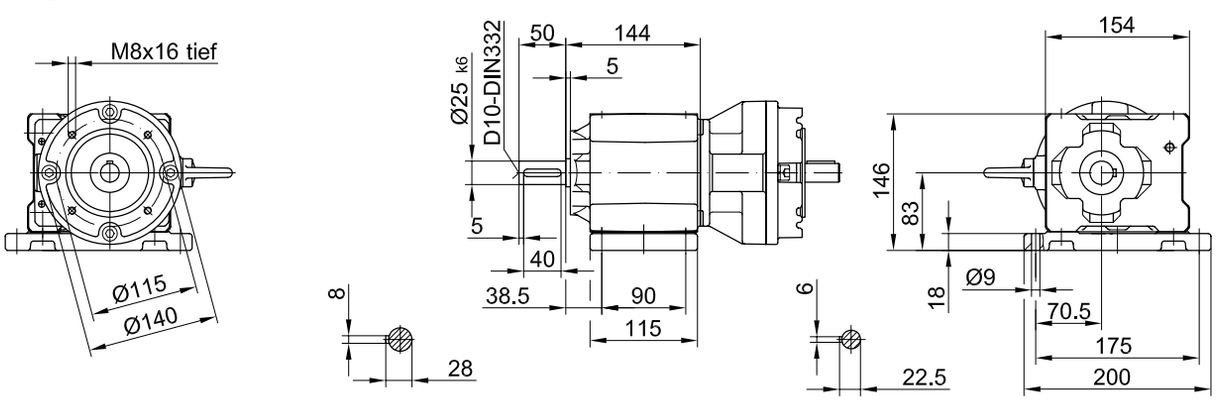

The actual gearbox design can vary from the geometry shown.

Input group

Dimensions of input group helical geared motors SN

BG20-BG20Z-SN

Fussausführung mit Durchgangslöchern

Code -11/

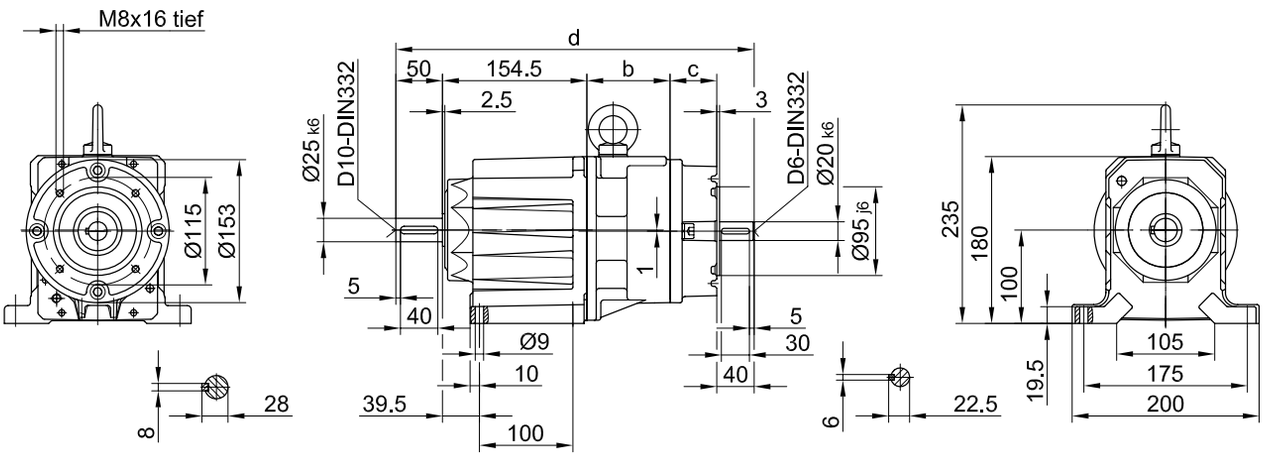

Flansch mit Durchgangslöchern

Code -37/

(Code -47/)

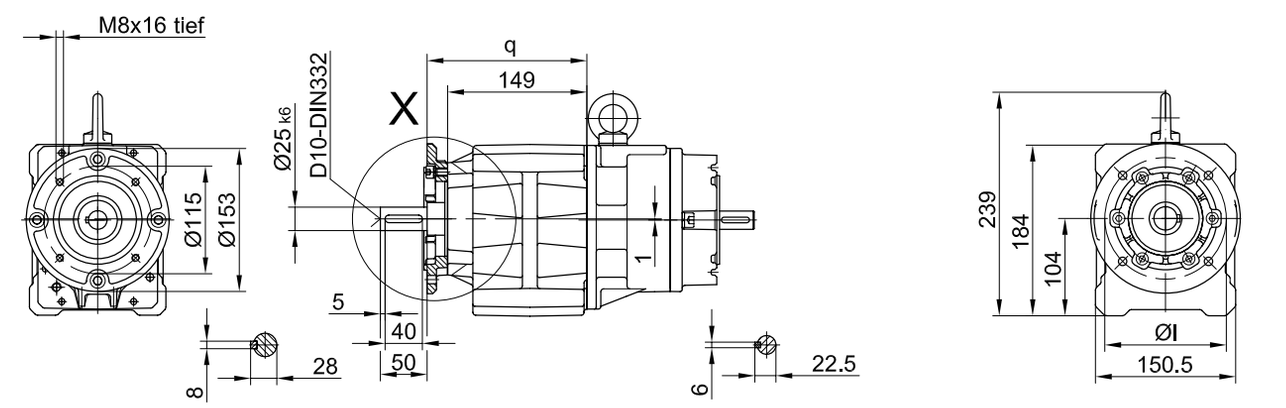

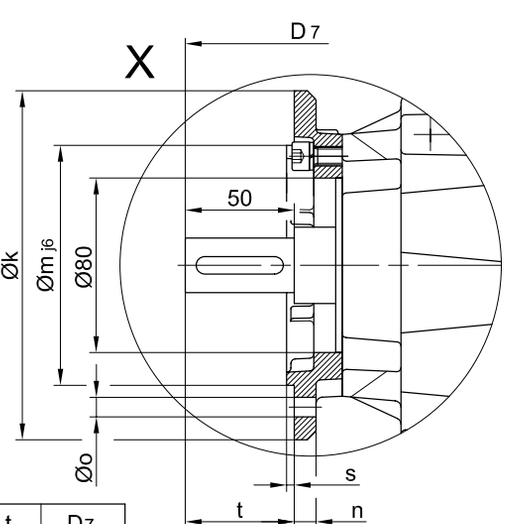

	b	c	d
BG20	89	50	383.5
BG20Z	150	39	433.5

Flanschmasse

BG20(Z)	k	l	m	n	o	q	s	t	D7
Standard -37/	160	130	110	10	Ø9	171	3.5	50	d+16.5
gross -47/	200	165	130	12	Ø11	178	3.5	43	d+16.5

The actual gearbox design can vary from the geometry shown.

BG20-BG20Z-SN

Flansch mit Gewindelöchern

Code -71/

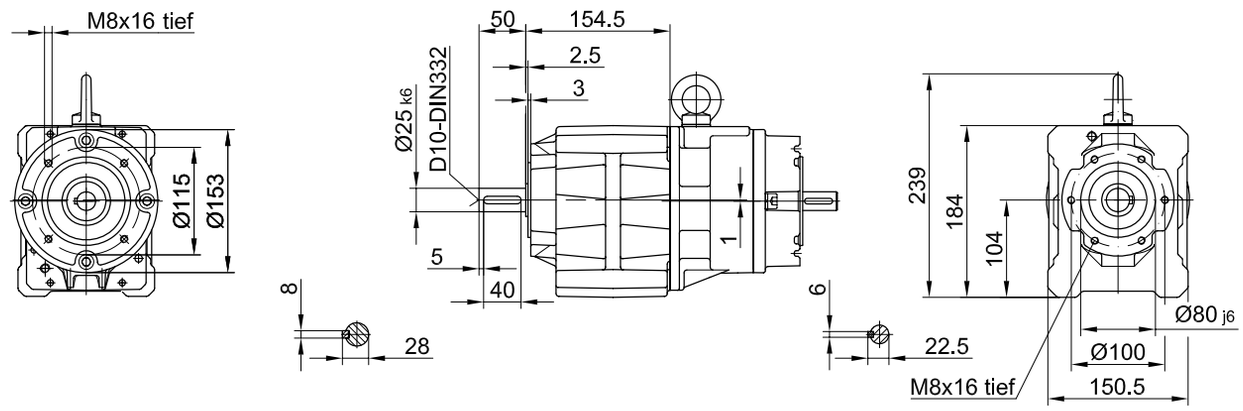

Fuss mit Gewindelöchern links und rechts

Code -61LR/

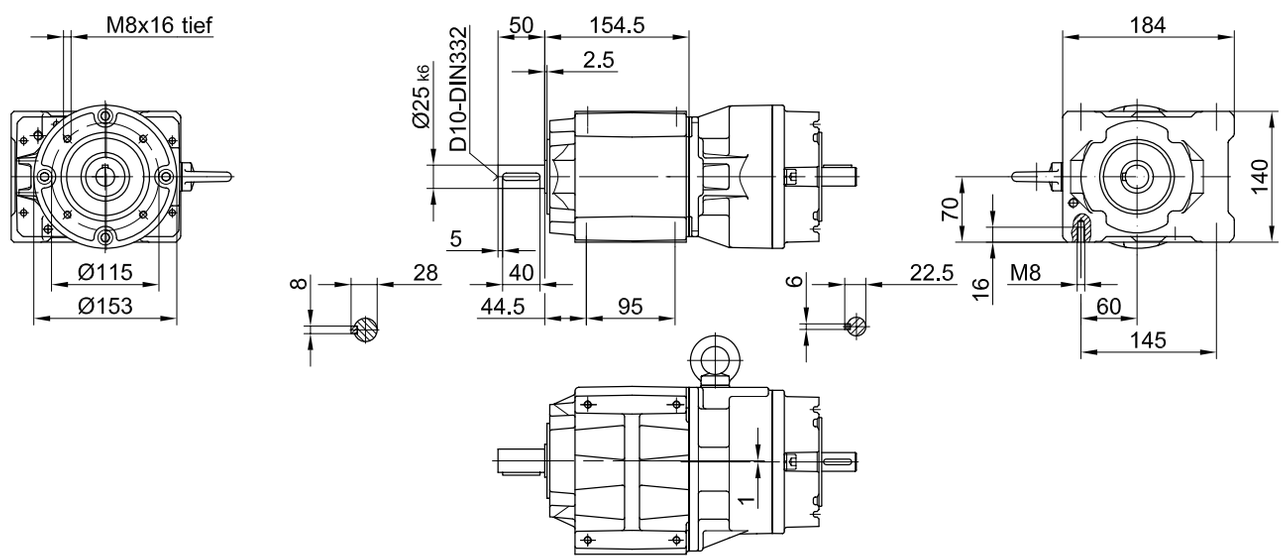

Fussplatte links

Code -91L/

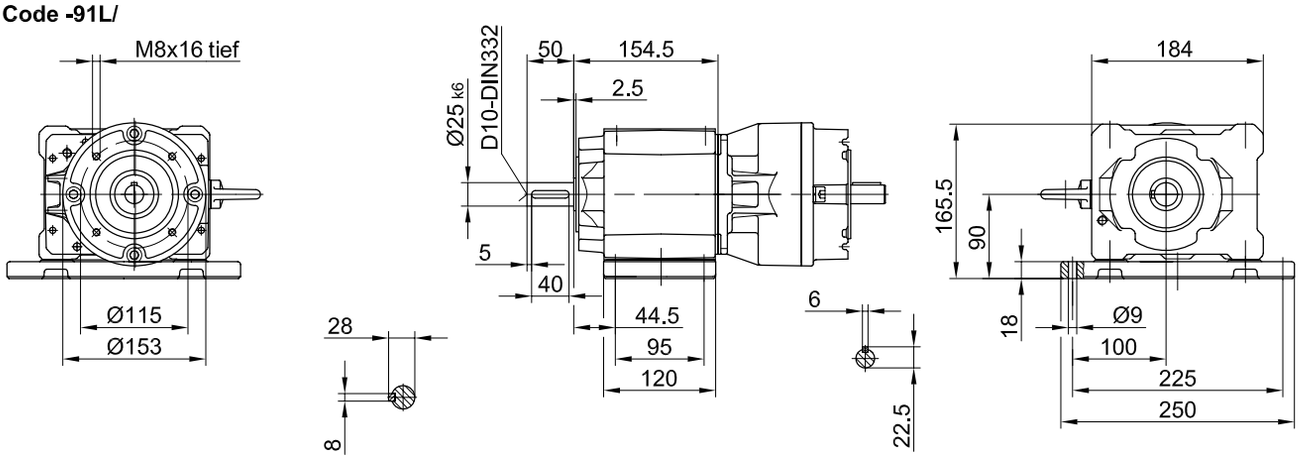

The actual gearbox design can vary from the geometry shown.

Input group

Dimensions of input group helical geared motors SN

BG30-BG30Z-SN

Fussausführung mit Durchgangslöchern

Code -11/

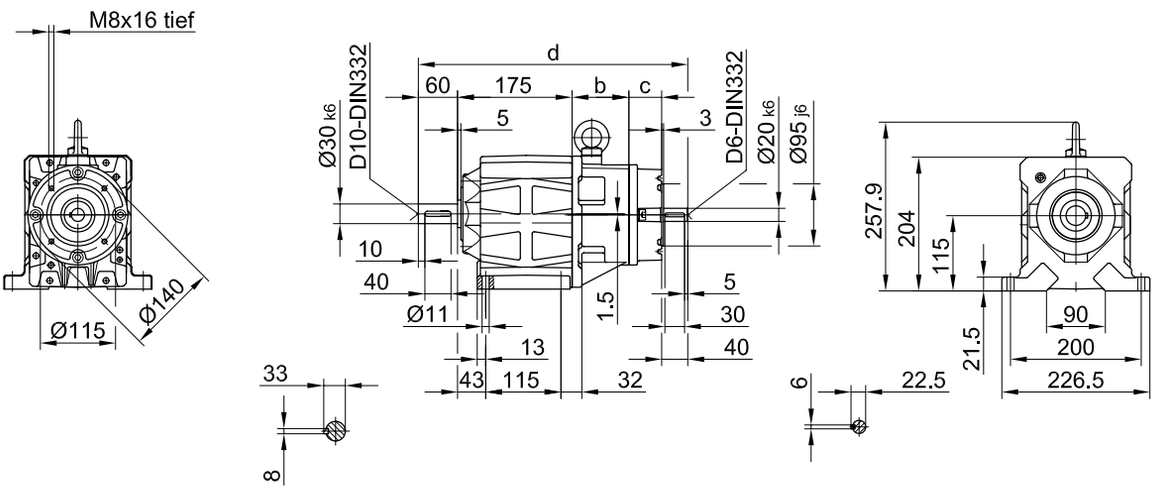

Flansch mit Durchgangslöchern

Code -37/

(Code -27/)

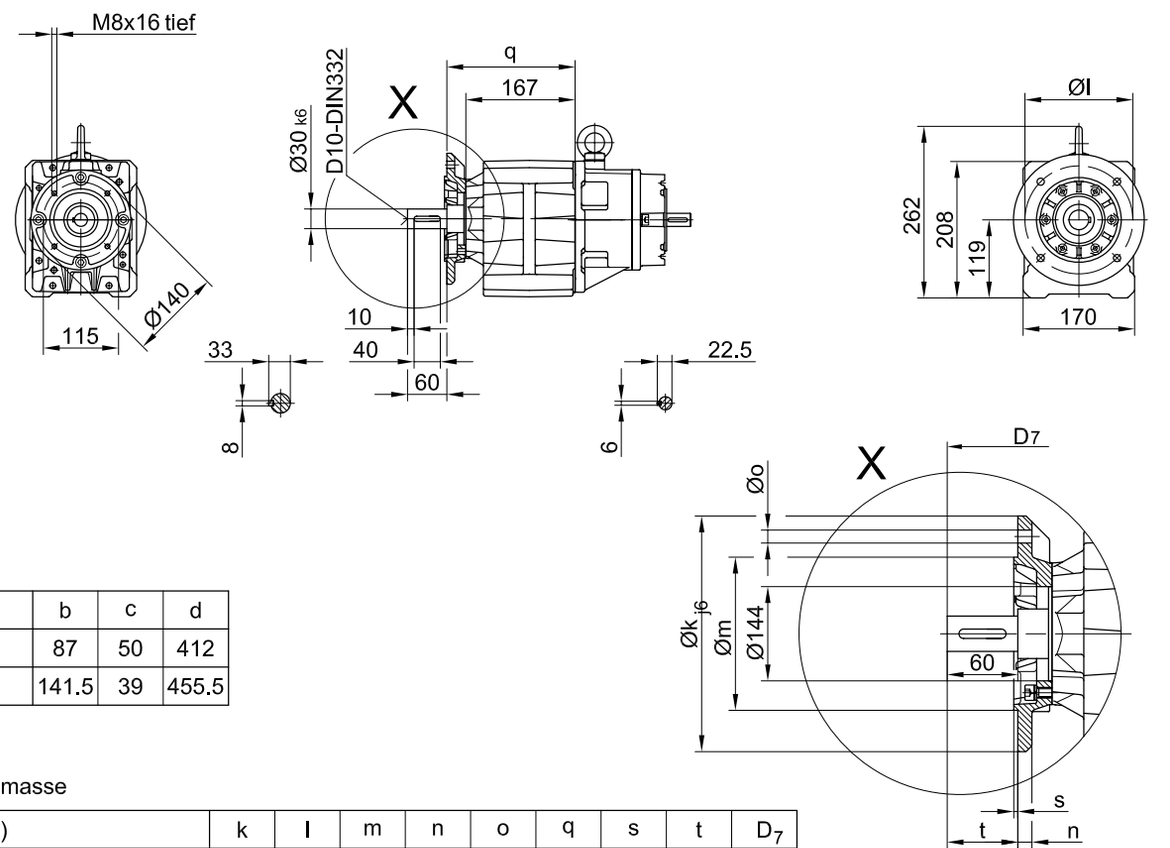

	b	c	d
BG30	87	50	412
BG30Z	141.5	39	455.5

Flanschmasse

BG30(Z)	k	l	m	n	o	q	s	t	D_7
Standard -37/	200	165	130	12	11	196	3.5	60	d+21
klein -27/	160	130	110	10	9	189	3.5	67	d+21

The actual gearbox design can vary from the geometry shown.

BG30-BG30Z-SN

Flansch mit Gewindelöchern

Code -71/

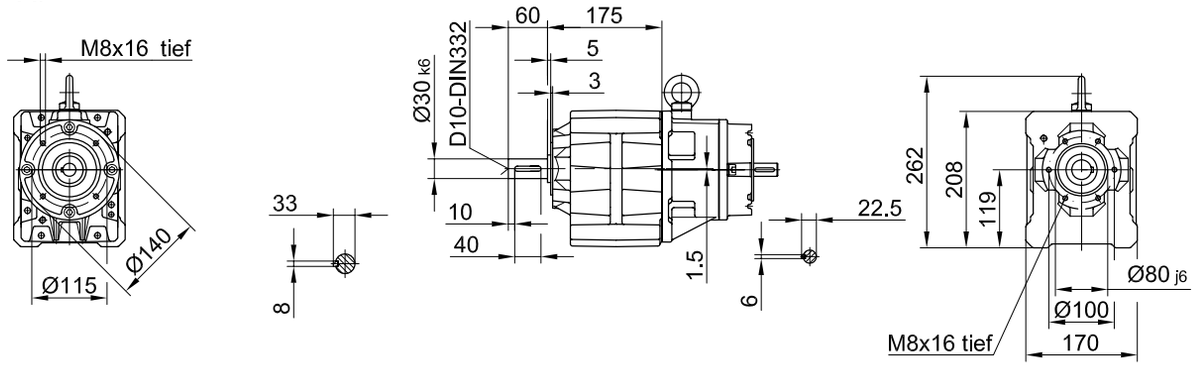

Fuss mit Gewindelöchern links und rechts

Code -61LR/

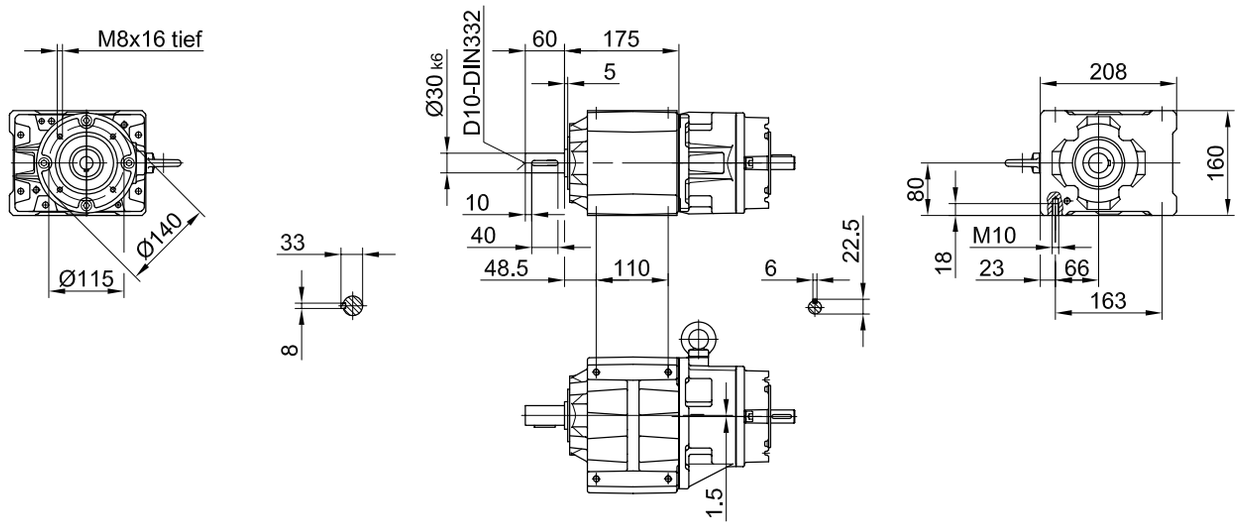

Fussplatte links

Code -91L/

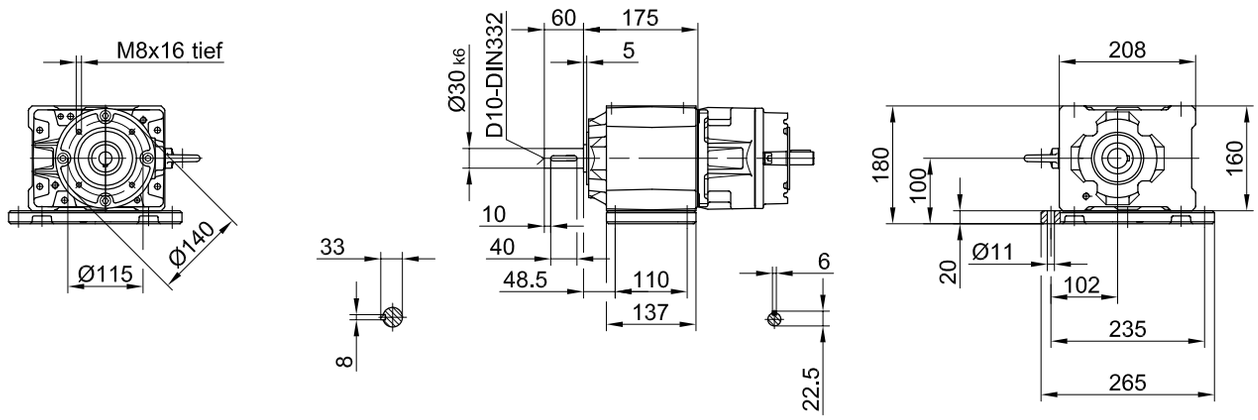

The actual gearbox design can vary from the geometry shown.

Input group

Dimensions of input group helical geared motors SN

BG40-BG40Z-SN

Fussausführung mit Durchgangslöchern

Code -11/

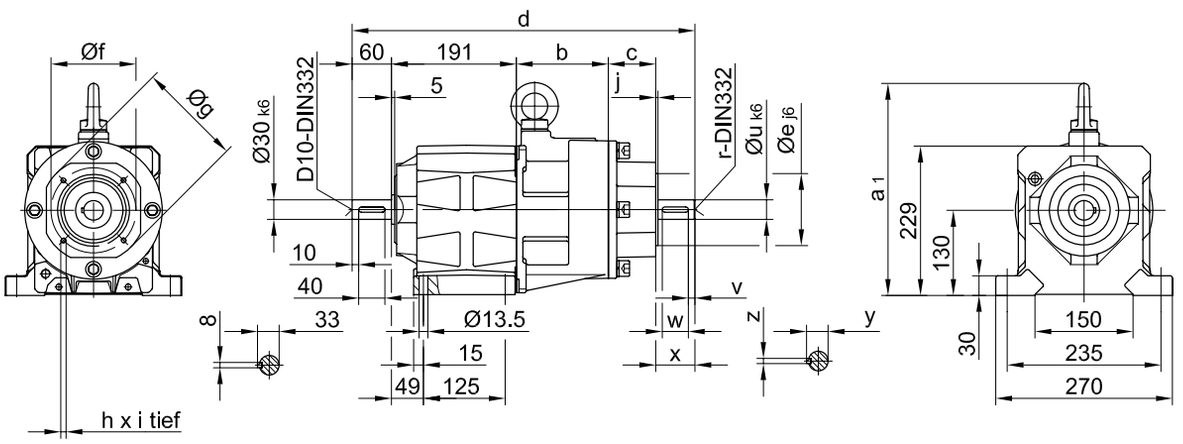

Flansch mit Durchgangslöchern

Code -37/

(Code -47/)

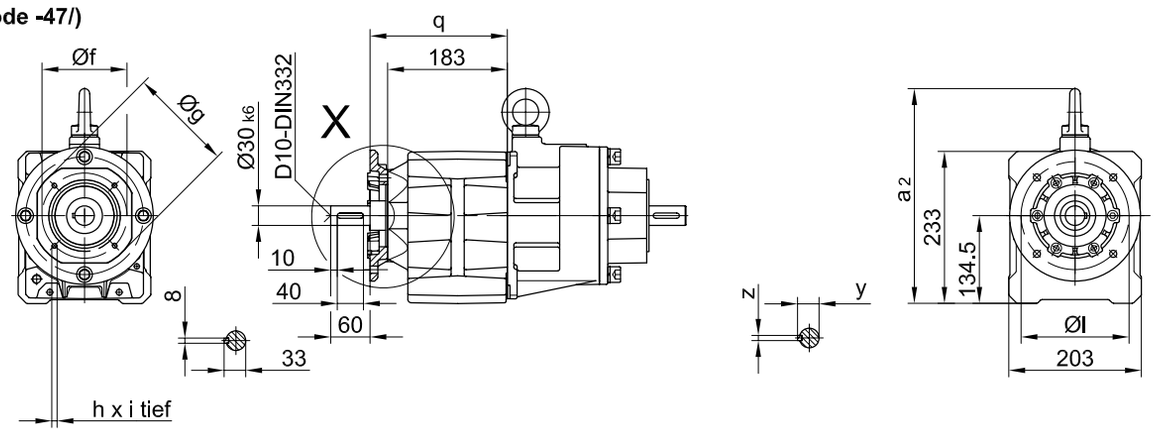

14

	a_1	a_2	b	c	d	e	f	g	h	i	j
BG40	324	328	140.5	72.5	524	110	130	160	M8	16	3.5
BG40Z	282	286	167.5	50	508.5	95	115	140	M8	16	3
	r	u	v	w	x	y	z				
BG40	D10	30	10	40	60	33	8				
BG40Z	D6	20	5	30	40	22.5	6				

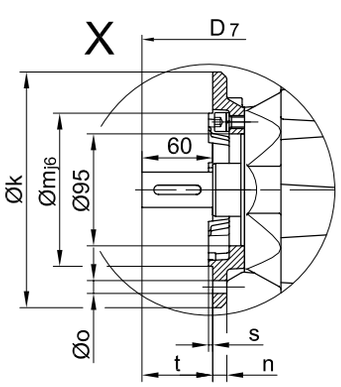

Flanschmasse

BG40(Z)	k	I	m	n	o	q	s	t	D_7
Standard -37/	200	165	130	12	11	210	3.5	60	d+19
gross -47/	250	215	180	16	13.5	219	4	51	d+19

The actual gearbox design can vary from the geometry shown.

BG40-BG40Z-SN

Flansch mit Gewindelöchern

Code -71/

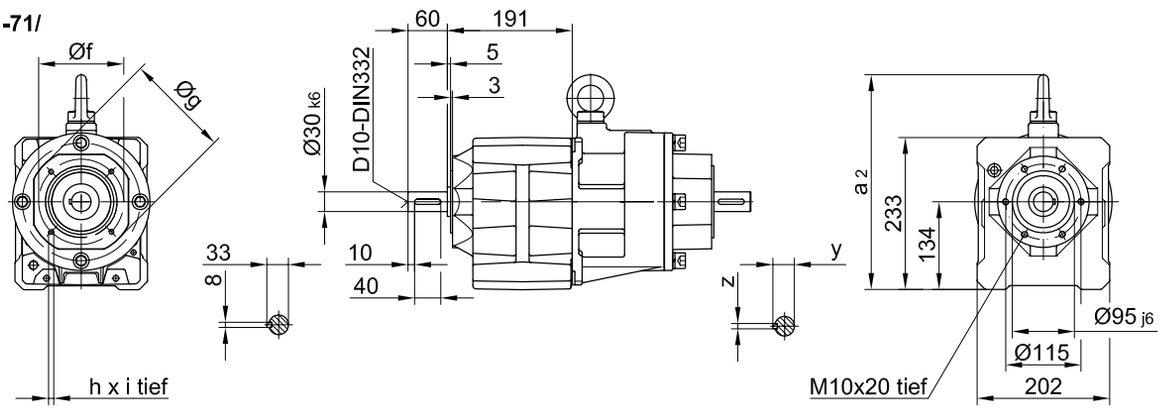

Fuss mit Gewindelöchern links und rechts

Code -61LR/

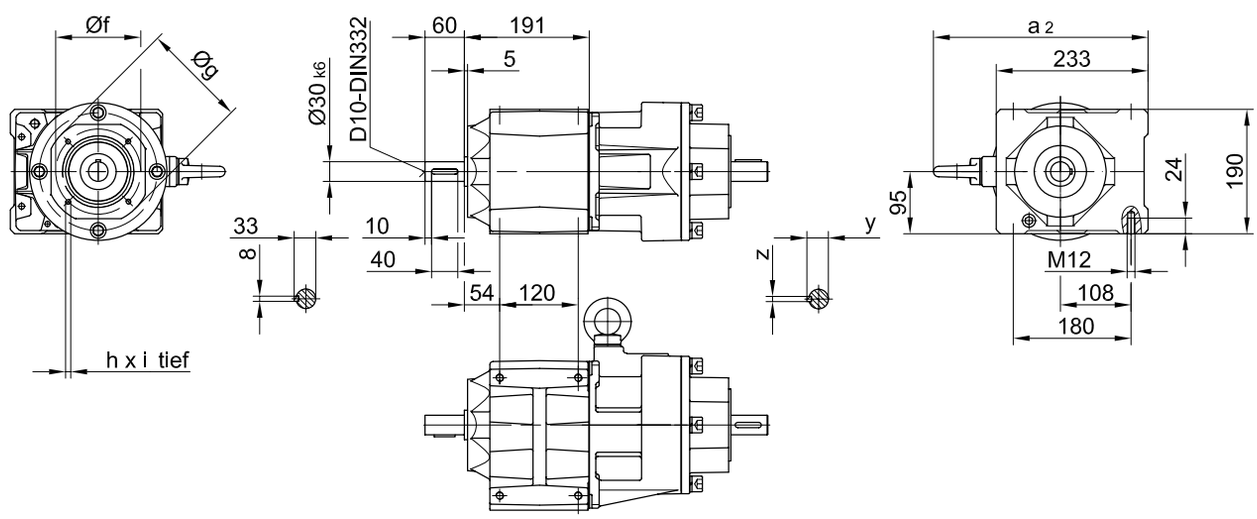

Fussplatte links

Code -91L/

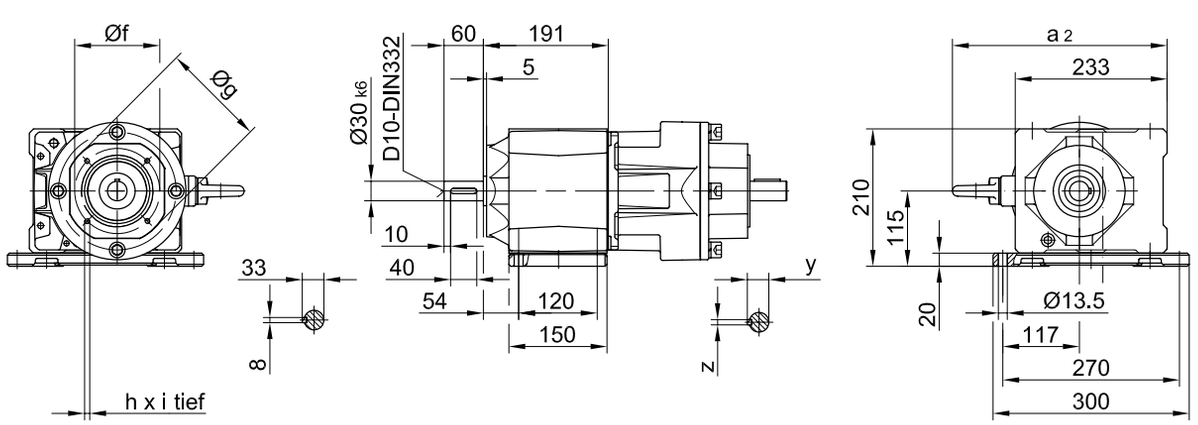

The actual gearbox design can vary from the geometry shown.

Input group

Dimensions of input group helical geared motors SN

BG50-BG50Z-SN

Fussausführung mit Durchgangslöchern

Code -11/

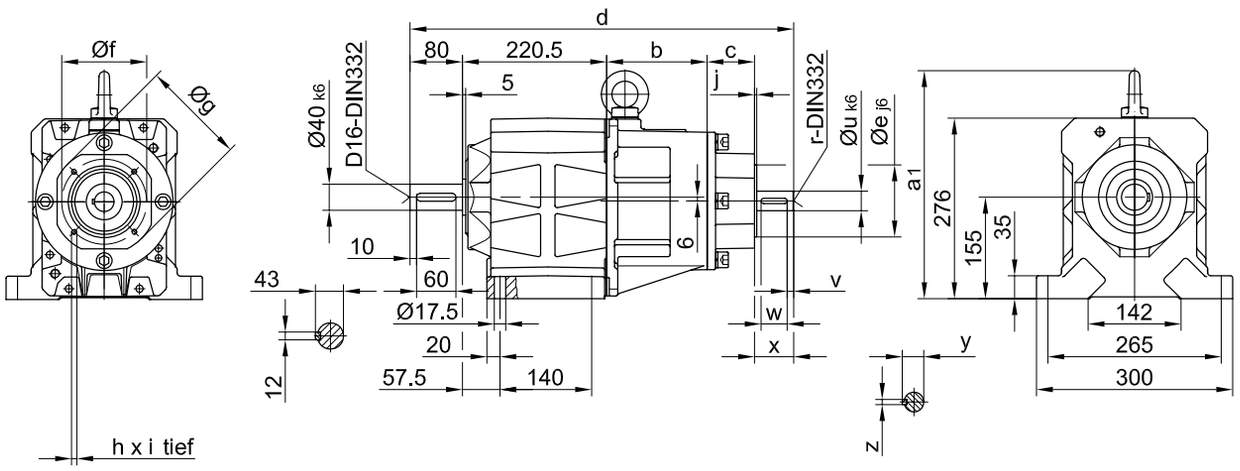

Flansch mit Durchgangslöchern

Code -37/

(Code -27/)

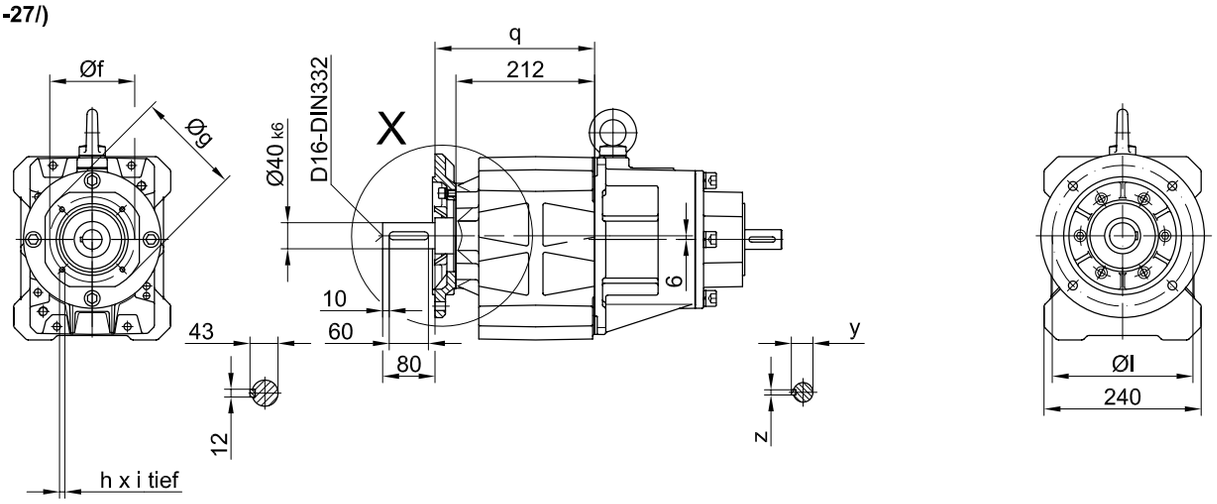

14

	a_1	a_2	b	c	d	e	f	g	h	i	j
BG50	338	342	153.5	72.5	586.5	110	130	160	M8	16	3.5
BG50Z	348	352	184	50	574.5	95	115	140	M8	16	3
	r	u	v	w	x	y	z				
BG50	D10	30	10	40	60	33	8				
BG50Z	D6	20	5	30	40	22.5	6				

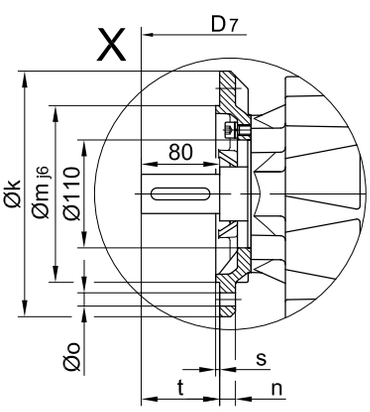

Flanschmasse

BG50(Z)	k	l	m	n	o	q	s	t	D_7
Standard -37/	250	215	180	16	13.5	244	4	80	d+23.5
klein -27/	200	165	130	12	11	241	3.5	83	d+23.5

The actual gearbox design can vary from the geometry shown.

BG50-BG50Z-SN

Flansch mit Gewindelöchern

Code -71/

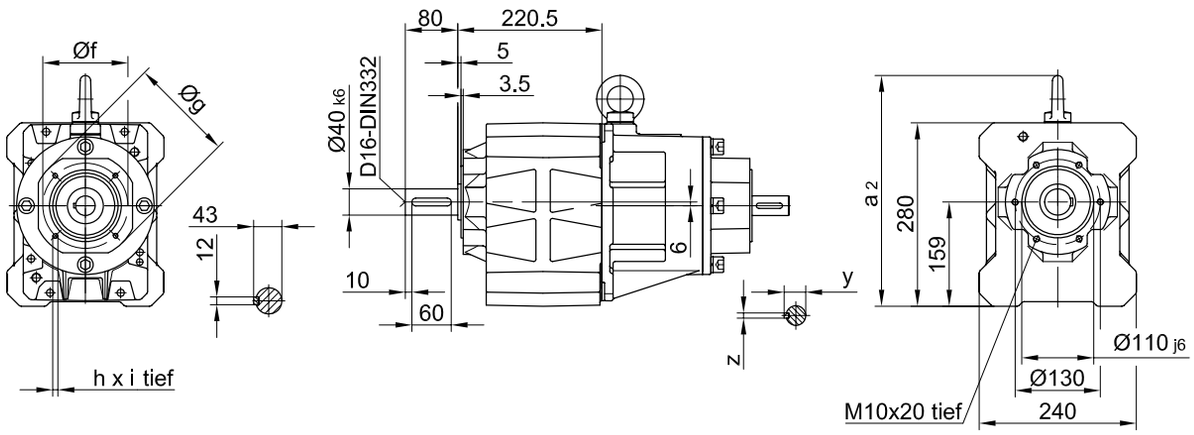

Fuss mit Gewindelöchern links und rechts

Code -61LR/

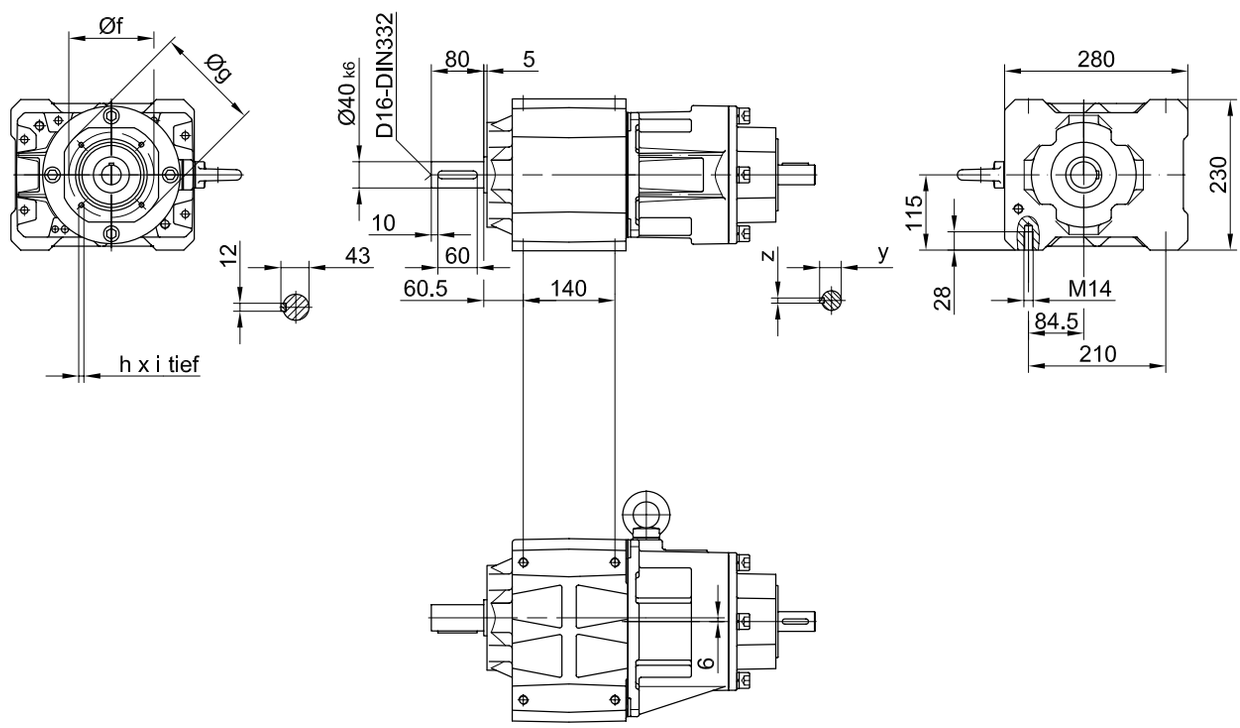

The actual gearbox design can vary from the geometry shown.

Input group

Dimensions of input group helical geared motors SN

BG60-BG60Z-SN

Fussausführung mit Durchgangslöchern

Code -11/

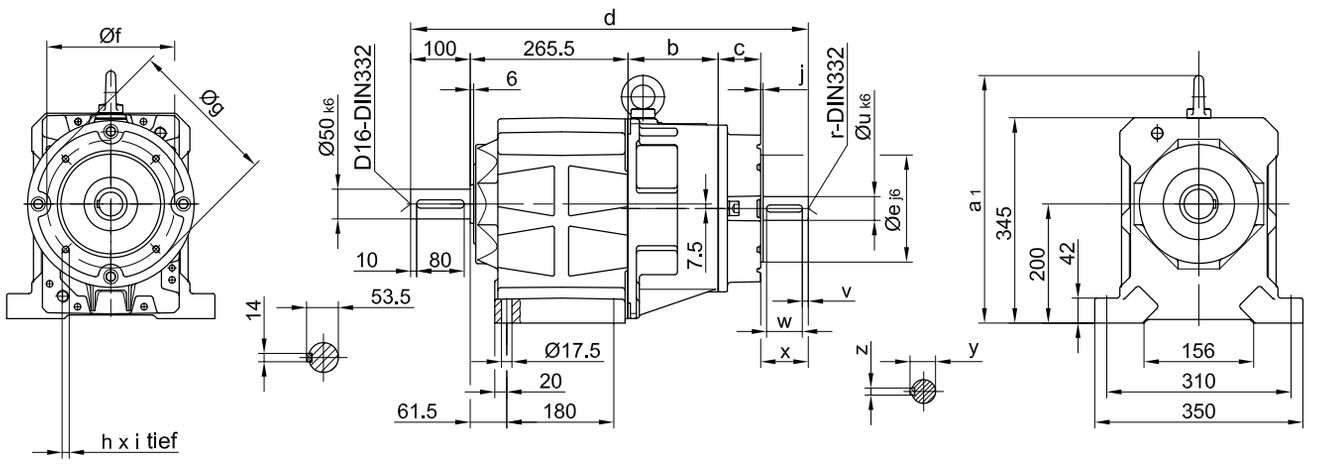

Flansch mit Durchgangslöchern

Code -37/

(Code -27/)

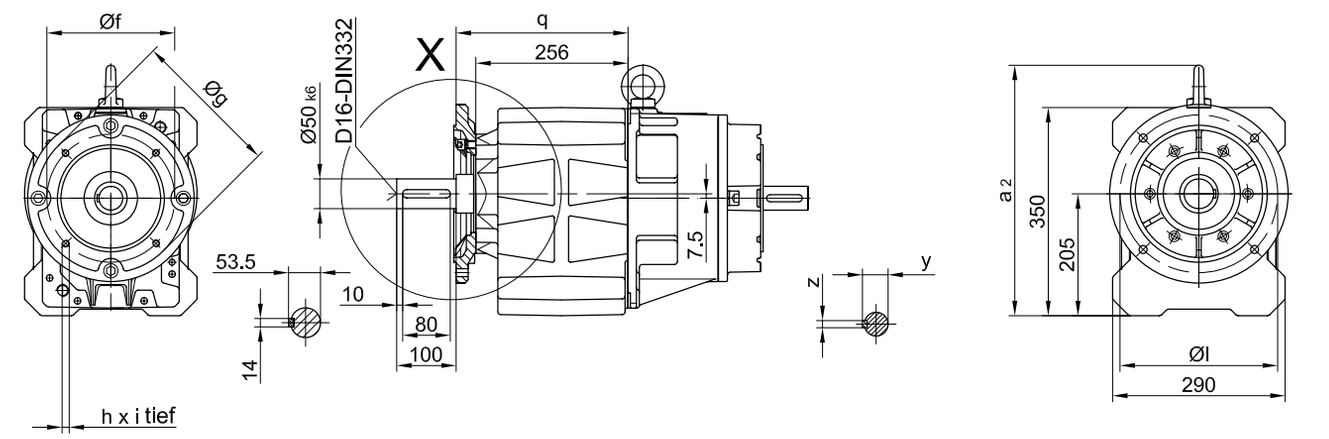

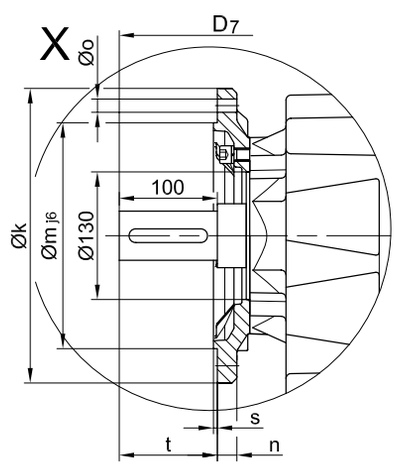

	a_1	a_2	b	c	d	e	f	g	h	i	j
BG60	416	421	151.5	71.5	668.5	180	215	250	M12	24	4
BG60Z	416	421	261.5	72.5	759.5	110	130	160	M8	16	3.5
	r	u	v	w	x	y	z				
BG60	D16	40	10	60	80	43	12				
BG60Z	D10	30	10	40	60	33	8				

Flanschmasse

BG60(Z)	k	l	m	n	o	q	s	t	D7
Standard -37/	300	265	230	20	13.5	289	4	100	d+23.5
klein -27/	250	215	180	16	13.5	286	4	103	d+23.5

The actual gearbox design can vary from the geometry shown.

BG60-BG60Z-SN

Flansch mit Gewindelöchern

Code -71/

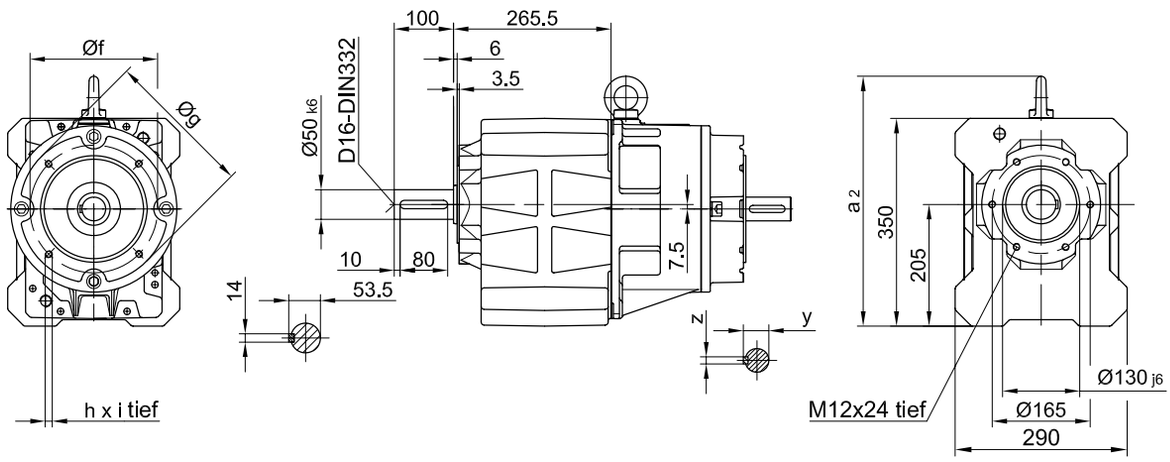

Fuss mit Gewindelöchern links und rechts

Code -61LR/

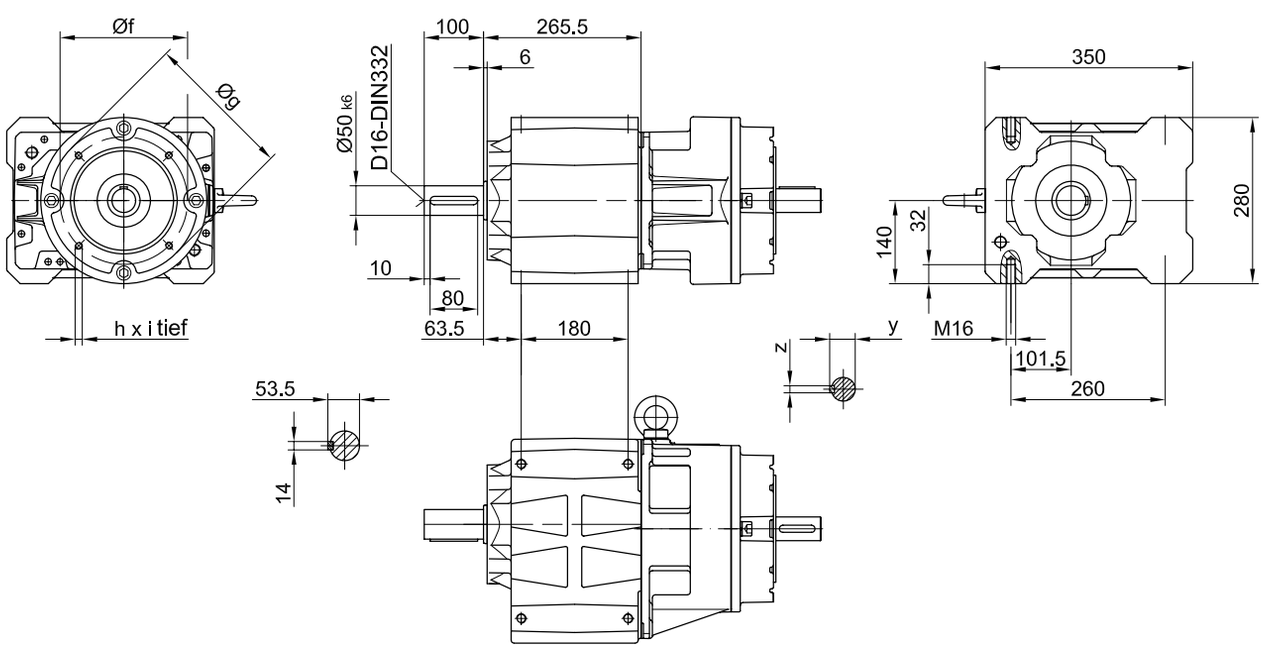

The actual gearbox design can vary from the geometry shown.

Input group

Dimensions of input group helical geared motors SN

BG70-BG70Z-SN

Fussausführung mit Durchgangslöchern

Code -11/

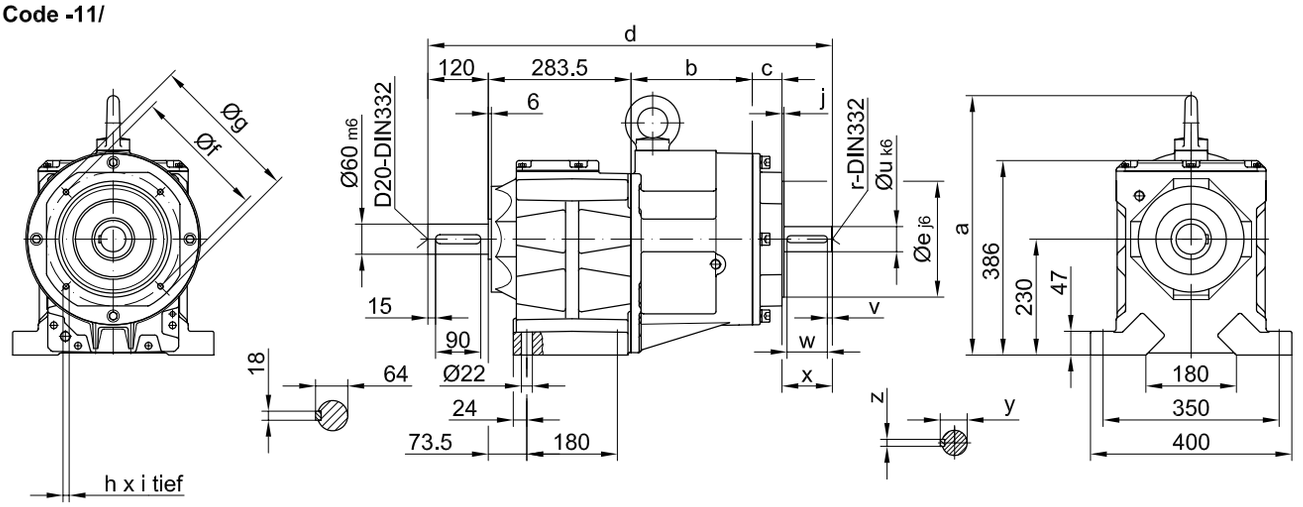

Flansch mit Durchgangslöchern

Code -37/

(Code -27/)

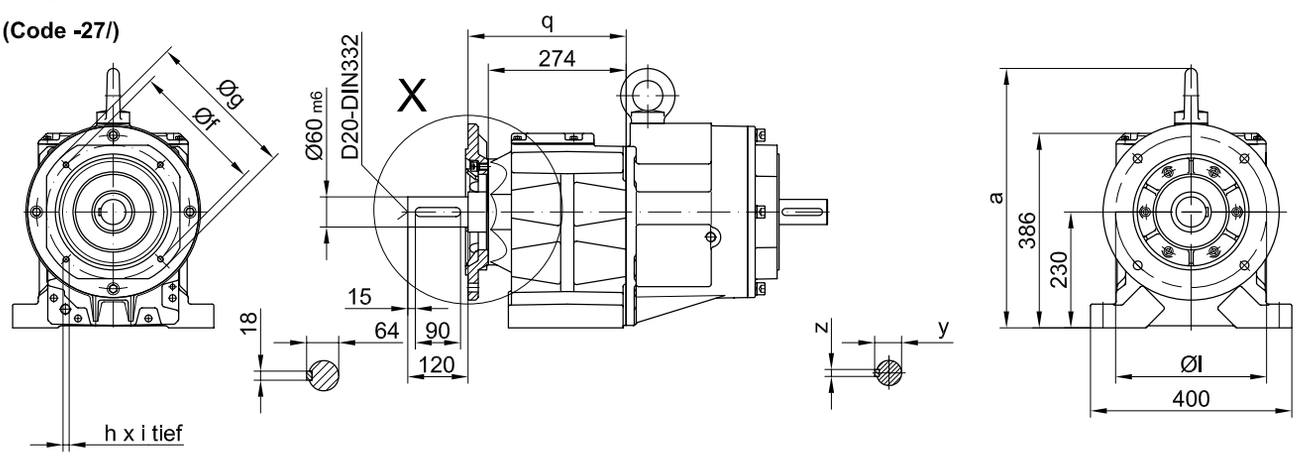

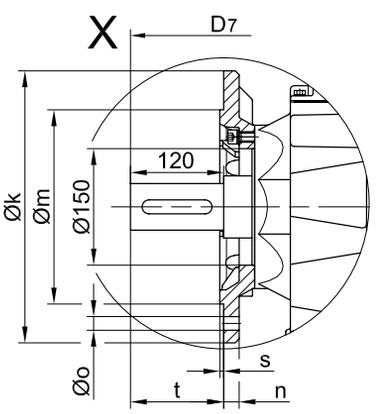

	a	b	c	d	e	f	g	h	i	j
BG70	515	241	59	803.5	230	265	300	M12	24	4
BG70Z	453	282.5	72.5	818.5	110	130	160	M8	16	3.5
	r	u	v	w	x	y	z			
BG70	D16	50	10	80	100	53.5	14			
BG70Z	D10	30	10	40	60	33	8			

Flanschmasse

BG70(Z)	k	l	m	n	o	q	s	t	D_7
Standard -37/	350	300	250_{h6}	20	17.5	314	5	120	d+30.5
klein -27/	300	265	230_{j6}	20	13.5	322	4	112	d+30.5

The actual gearbox design can vary from the geometry shown.

BG80-BG80Z-SN

Fussausführung mit Durchgangslöchern

Code -11/

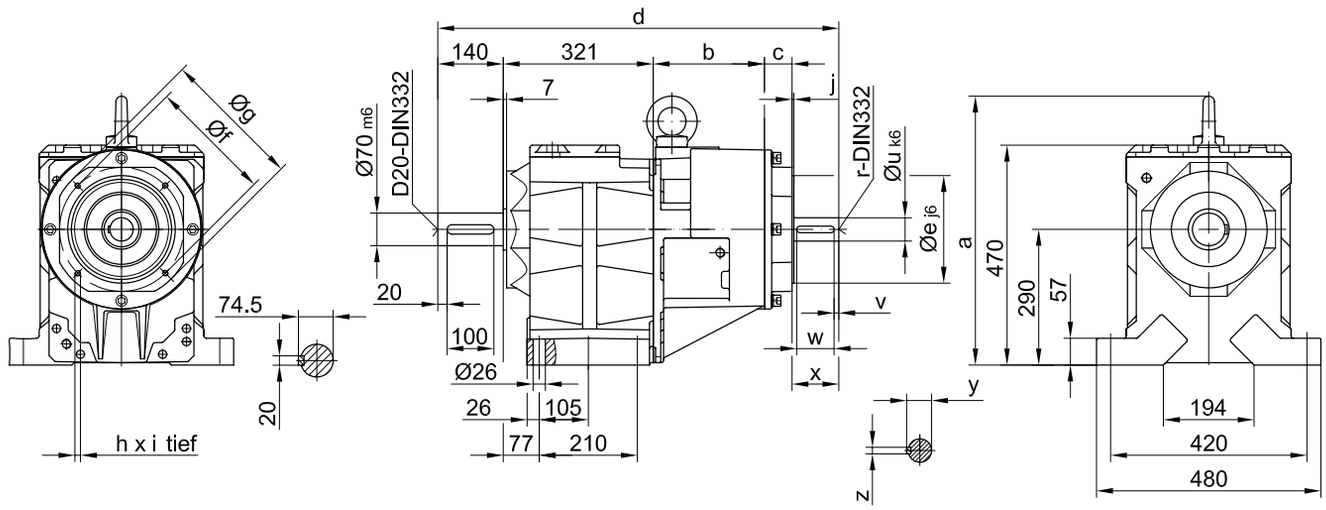

Flansch mit Durchgangslöchern

Code -37/

(Code -27/)

(Code -47/)

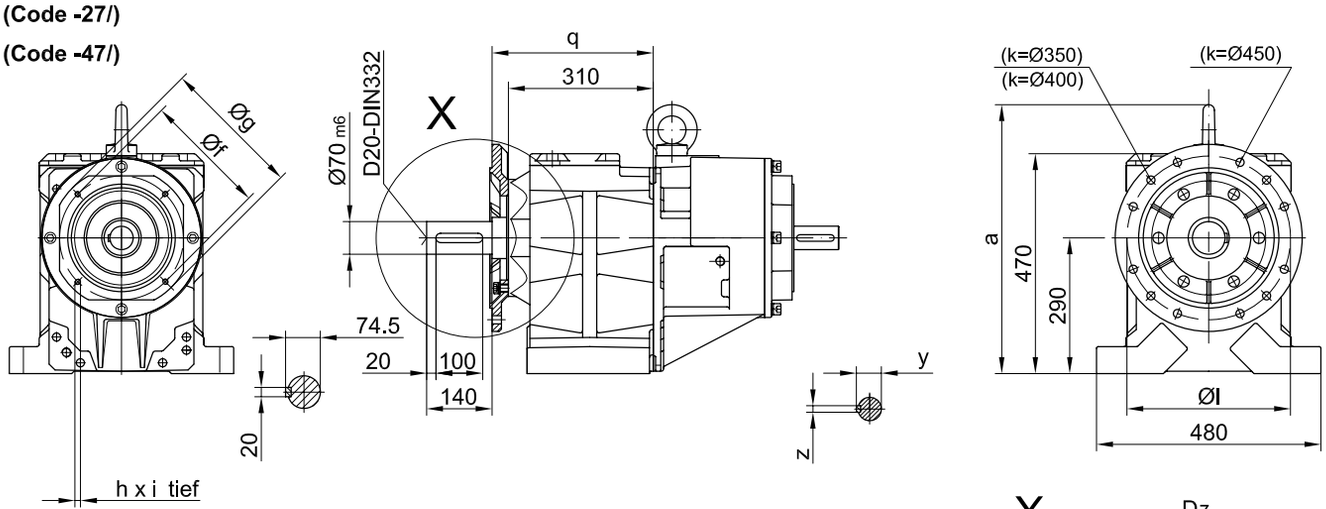

	a	b	c	d	e	f	g	h	i	j
BG80	575	238	59	858	230	265	300	M12	24	4
BG80Z	553	318.5	71.5	931	180	215	250	M12	24	4
	r	u	v	w	x	y	z			
BG80	D16	50	10	80	100	53.5	14			
BG80Z	D16	40	10	60	80	43	12			

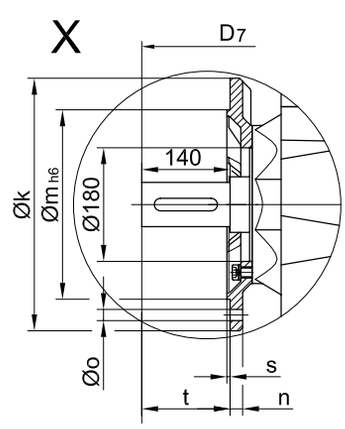

Flanschmasse

BG80(Z)	k	l	m	n	o	q	s	t	D_7
Standard -37/	400	350	300	20	4 x Ø17.5	345	5	140	d+24
klein -27/	350	300	250	20	4 x Ø17.5	345	5	140	d+24
gross -47/	450	400	350	22	8 x Ø17.5	355	5	130	d+24

The actual gearbox design can vary from the geometry shown.

Input group

Dimensions of input group helical geared motors SN

BG90-BG90Z-SN

Fussausführung mit Durchgangslöchern
Code -11/

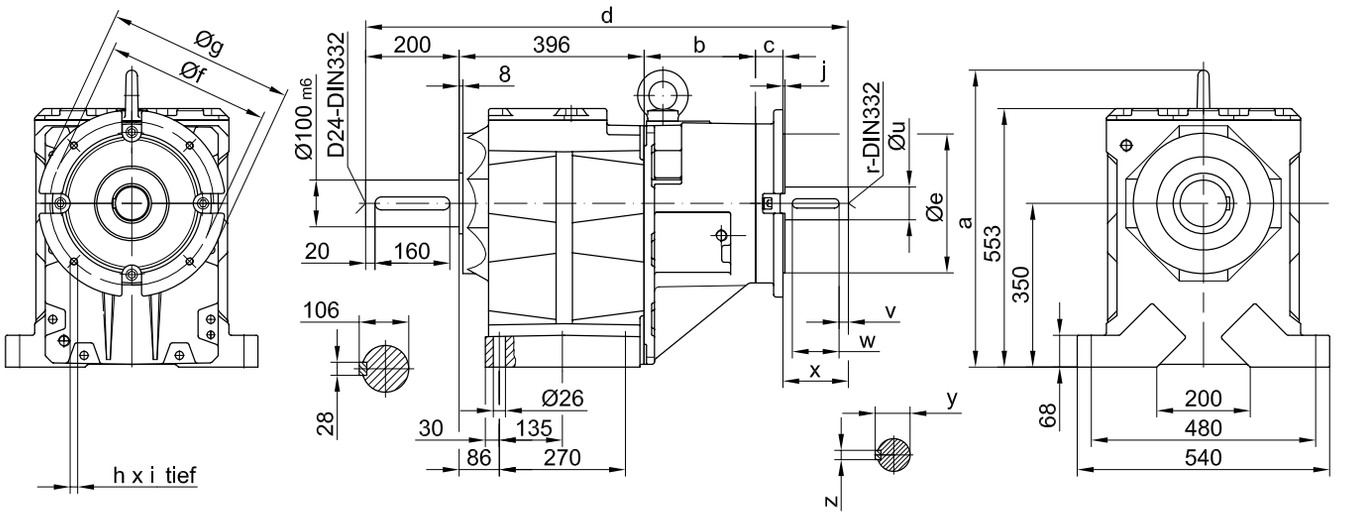

Flansch mit Durchgangslöchern
Code -37/
(Code -47/)

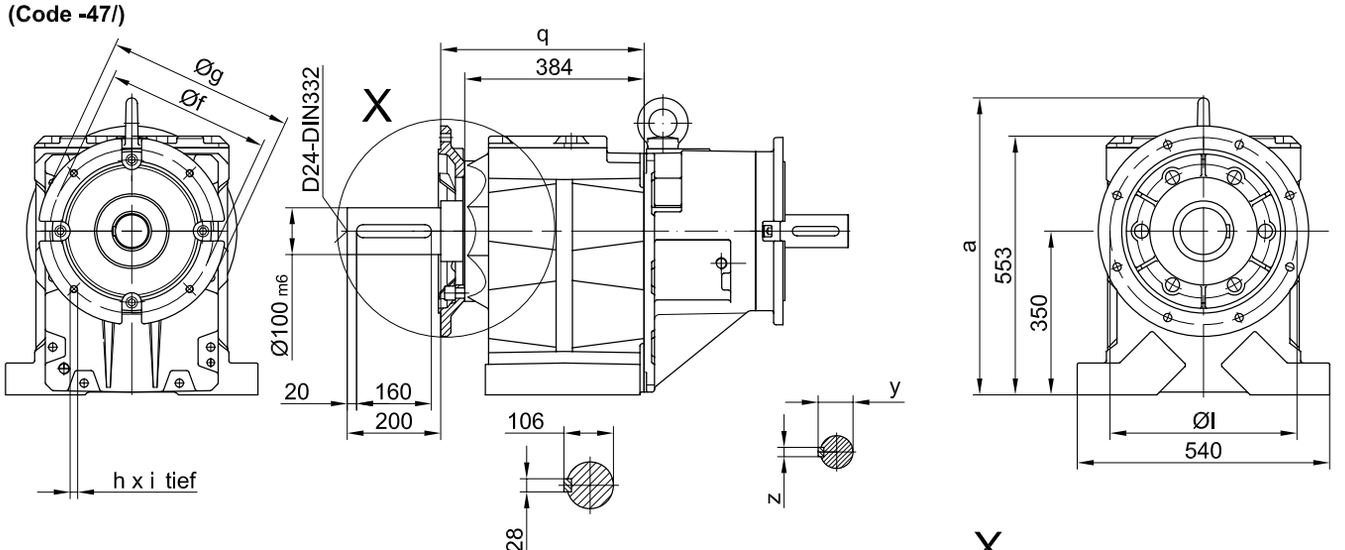

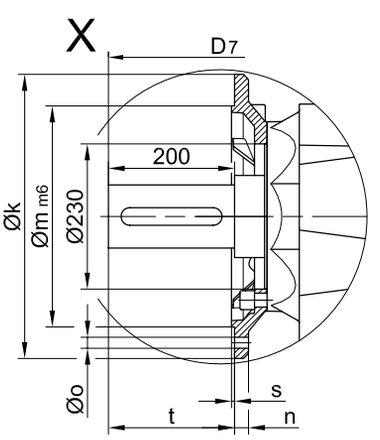

	a	b	c	d	e	f	g	h	i	j
BG90	635	238	59	1033	300_{h6}	350	400	M16	32	4
BG90Z	629	424.5	59	1180.5	230_{j6}	265	300	M12	24	4
	r	u	v	w	x	y	z			
BG90	D20	70_{m6}	20	100	140	74.5	20			
BG90Z	D16	50_{k6}	10	80	100	53.5	14			

Flanschmasse

BG90(Z)	k	l	m	n	o	q	s	t	D_7
Standard -37/	450	400	350	22	17.5	439	5	200	d+43
gross -47/	550	500	450	22	17.5	444	5	195	d+43

The actual gearbox design can vary from the geometry shown.

BG100-BG100Z-SN

Fussausführung mit Durchgangslöchern

Code -11/

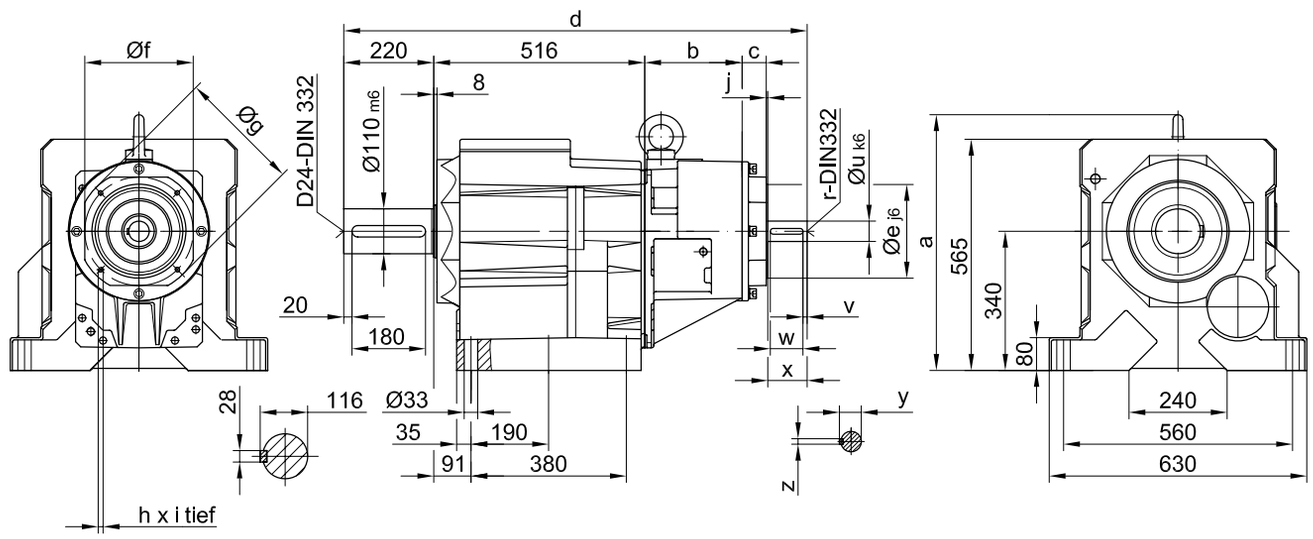

Flansch mit Durchgangslöchern

Code -37/

(Code -47/)

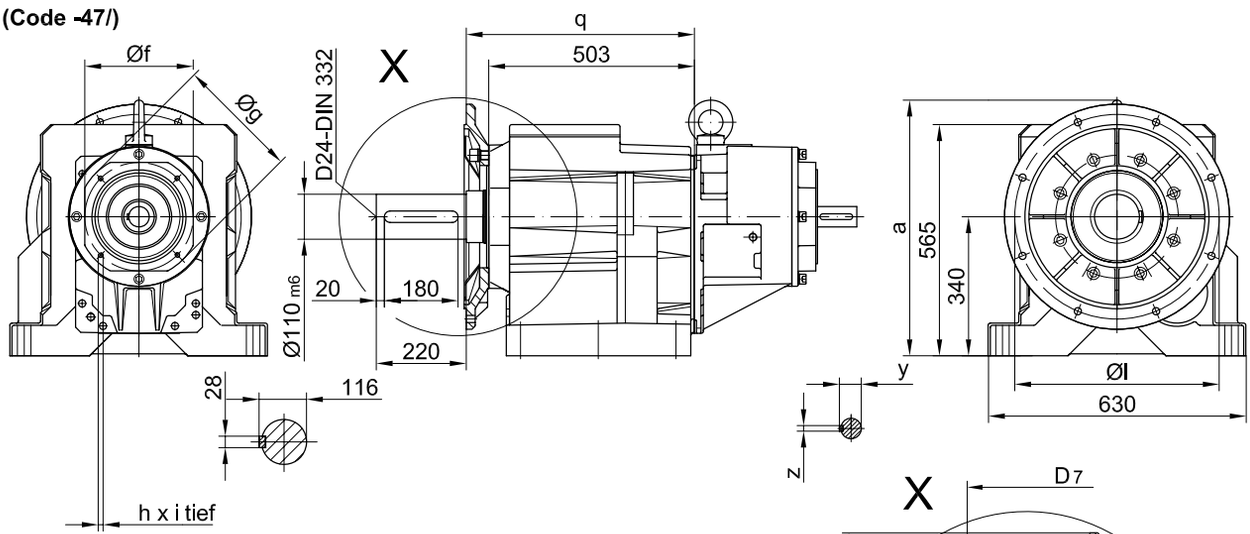

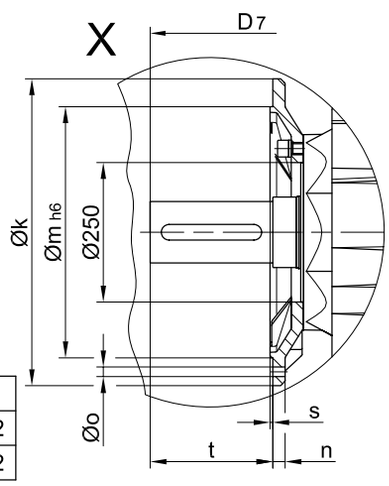

	a	b	c	d	e	f	g	h	i	j
BG100	625	238	59	1133	230	265	300	M12	24	4
BG100Z	603	318.5	71.5	1206	180	215	250	M12	24	4

	r	u	v	w	x	y	z
BG100	D16	50	10	80	100	53.5	14
BG100Z	D16	40	10	60	80	43	12

Flanschmasse

BG100(Z)	k	l	m	n	o	q	s	t	D7
Standard -37/	550	500	450	22	17.5	558	5	220	d+42
gross -47/	660	600	550	25	22	552	6	214	d+42

The actual gearbox design can vary from the geometry shown.

Input group

Dimensions of input group parallel shaft geard motors SN

BF10-BF10Z-SN

mit Drehmomentstütze
Code -0./

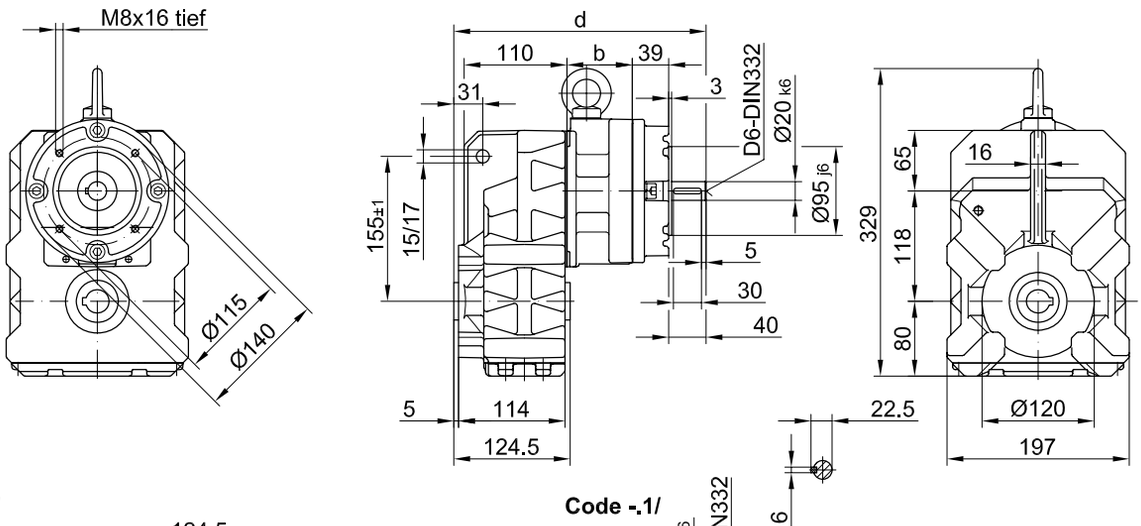

Code -.4/

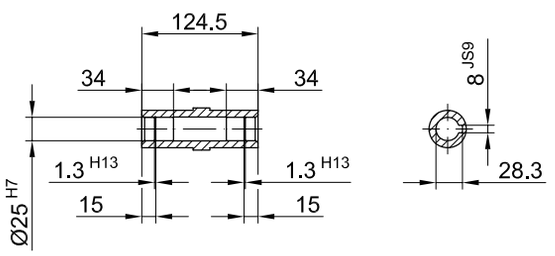

Code -.1/

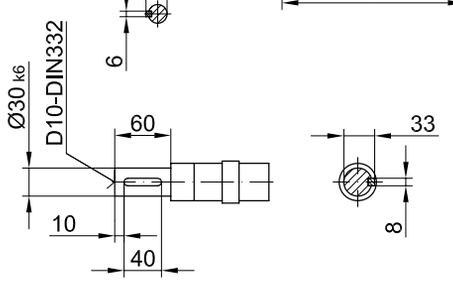

Code -.5/

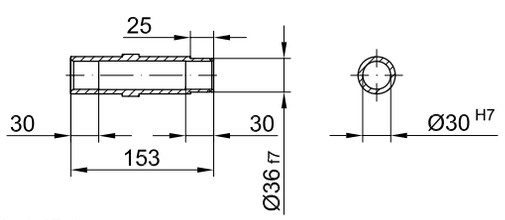

	b	d
BF10	70	270
BF10Z	136	336

Flansch mit Gewindelöchern
Code -7./

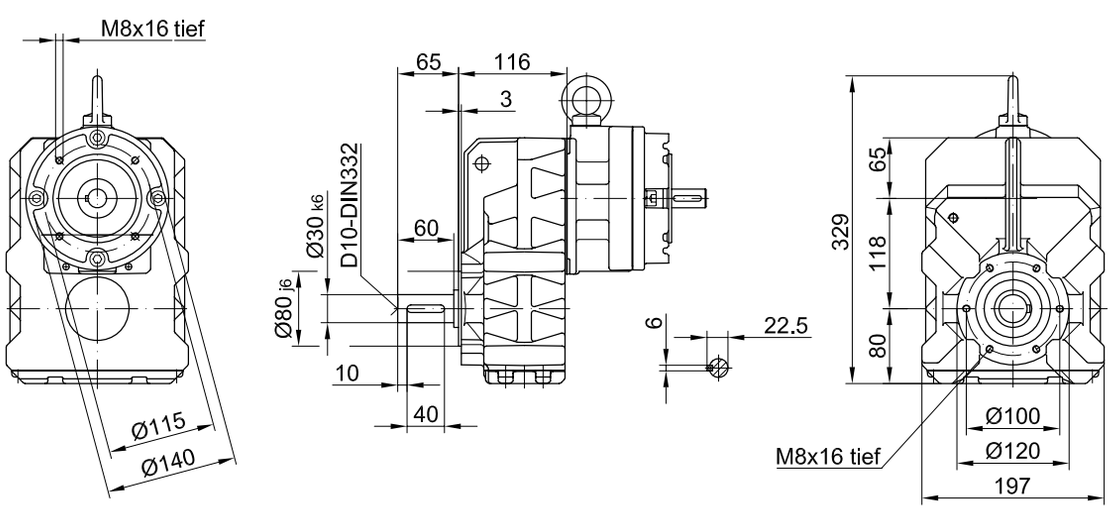

The actual gearbox design can vary from the geometry shown.

BF10-BF10Z-SN

Flansch mit Durchgangslöchern
Code -3./
(Code -2./)

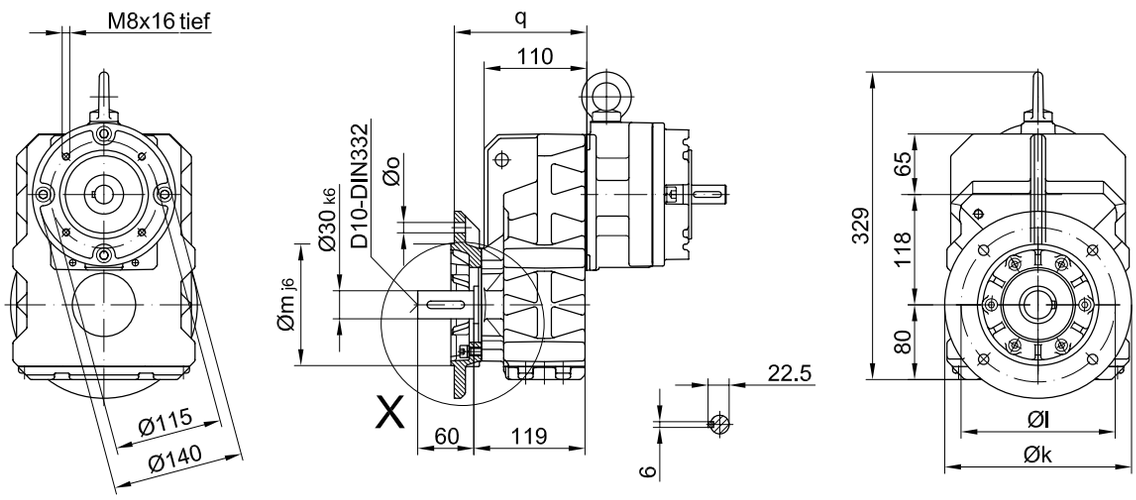

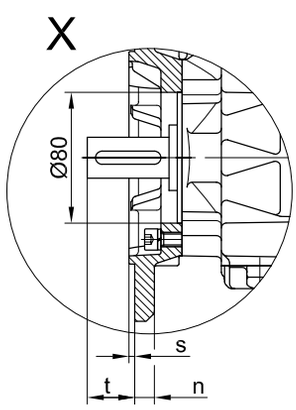

Flanschmasse

BF10(Z)	k	l	m	n	o	q	s	t
Standard -3./	200	165	130	12	11	142	3.5	39
klein -2./	160	130	110	10	9	135	3.5	46

Fuss mit Gewindelöchern links und rechts
Code -6.LR/

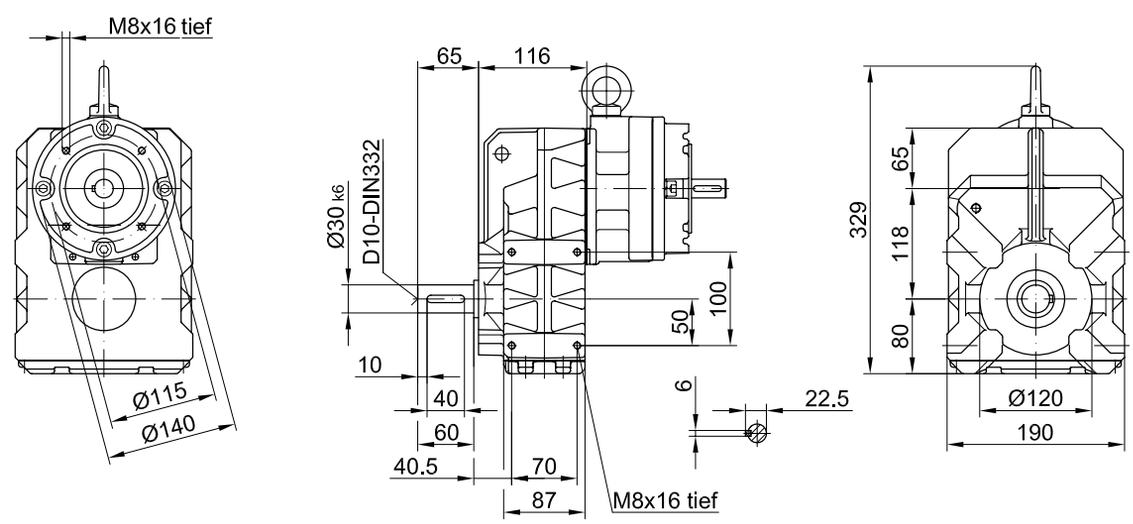

The actual gearbox design can vary from the geometry shown.

Input group

Dimensions of input group parallel shaft geard motors SN

BF20-BF20Z-SN

mit Drehmomentstütze

Code -0./

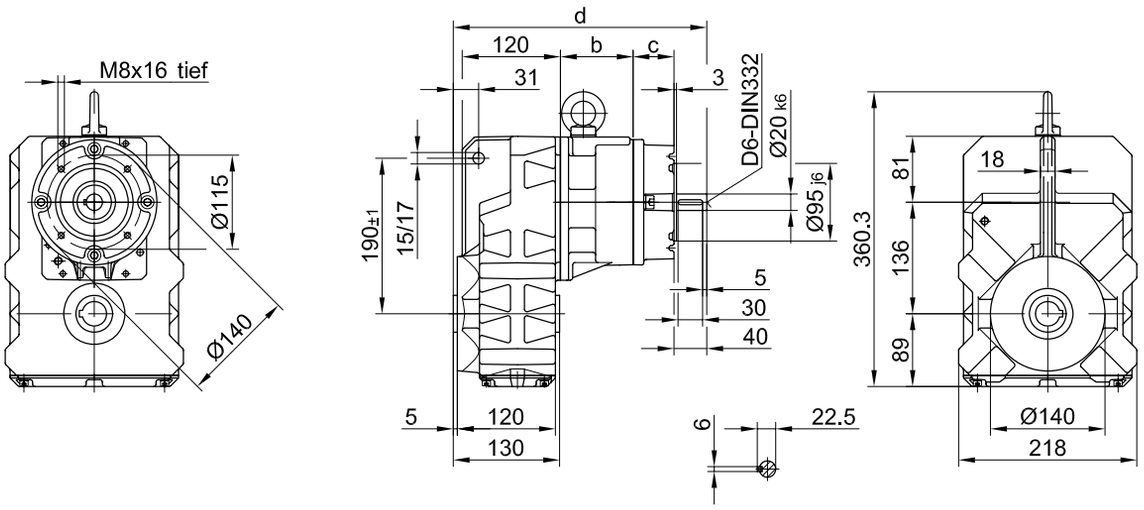

Code -.4/

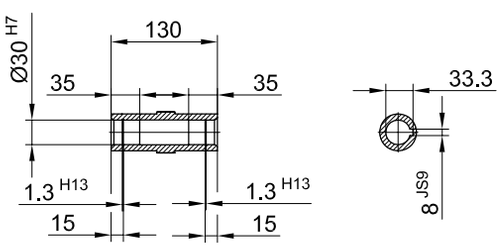

Code -.1/

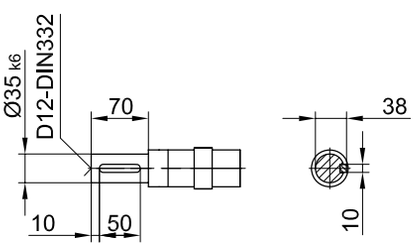

Code -.5/

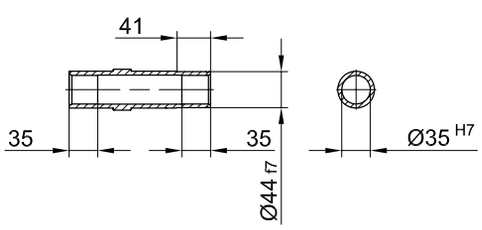

	b	c	d
BF20	89	50	310
BF20Z	150	39	360

Flansch mit Gewindelöchern

Code -7./

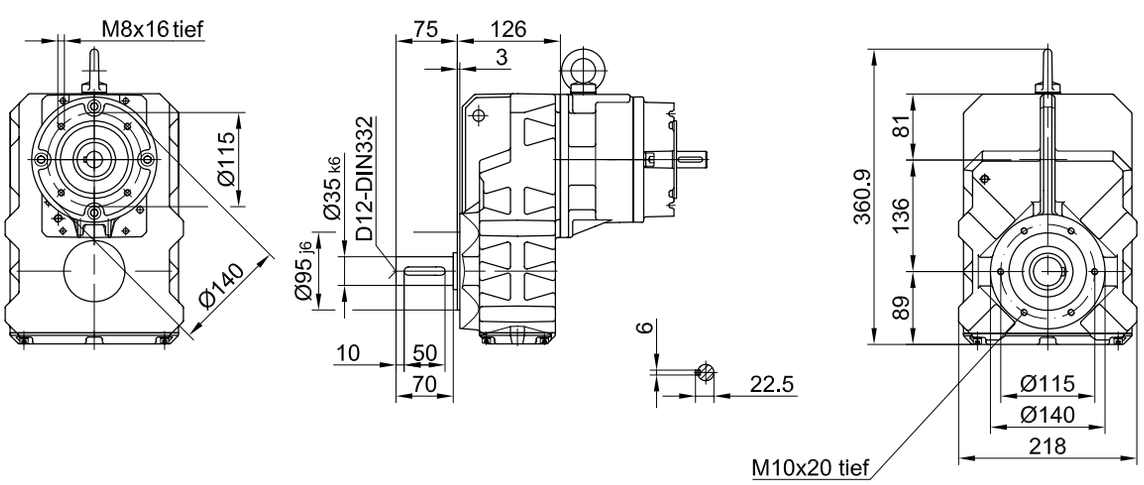

The actual gearbox design can vary from the geometry shown.

BF20-BF20Z-SN

Flansch mit Durchgangslöchern

Code -3./

(Code -2./)

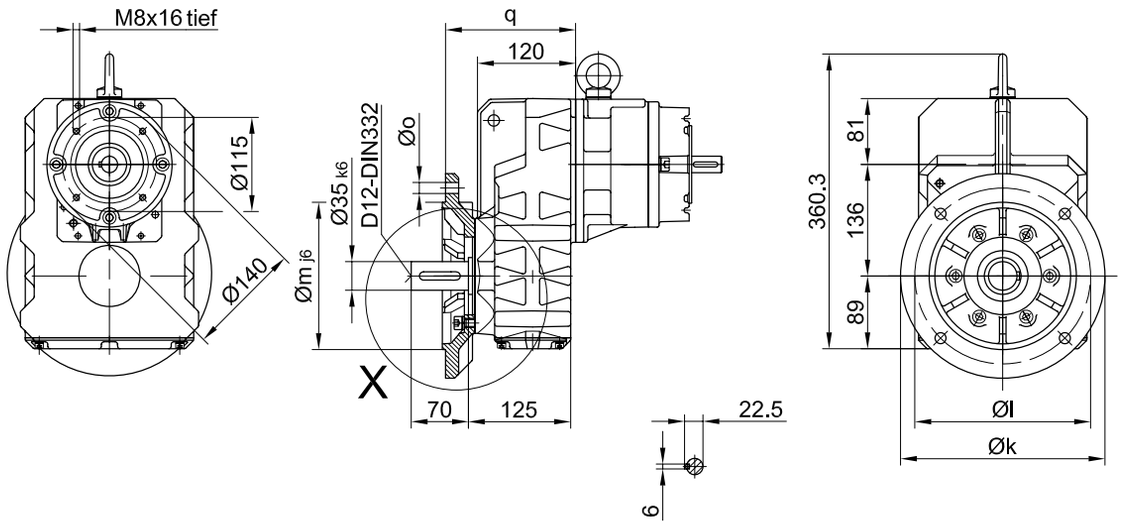

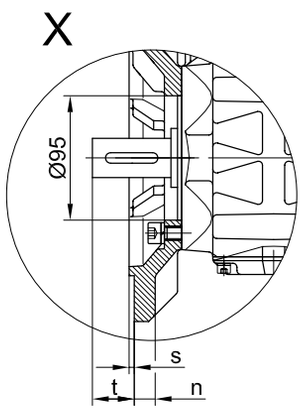

Flanschmasse

BF20(Z)	k	l	m	n	o	q	s	t
Standard -3./	250	215	180	16	13.5	159	4	42
klein -2./	200	165	130	12	11	150	3.5	51

Fuss mit Gewindelöchern links und rechts

Code -6.LR/

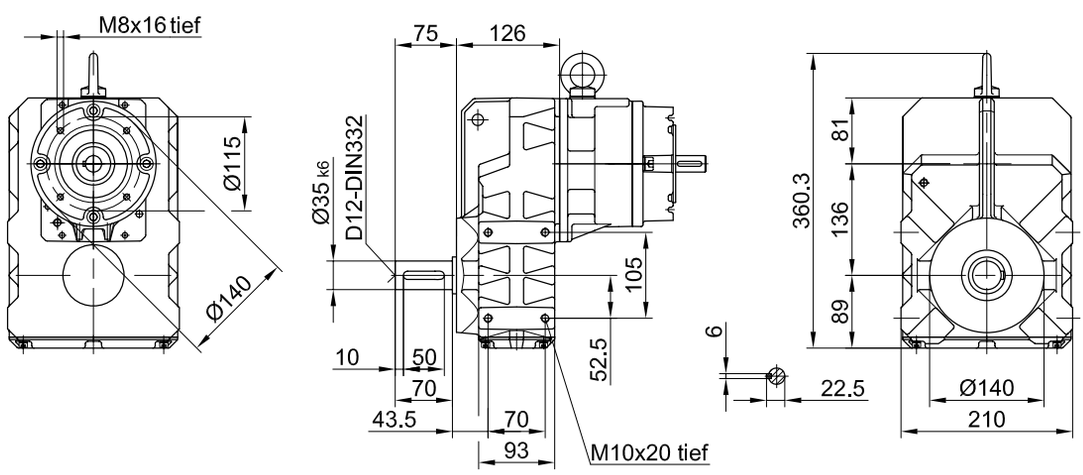

The actual gearbox design can vary from the geometry shown.

Input group

Dimensions of input group parallel shaft geard motors SN

BF30-BF30Z-SN

mit Drehmomentstütze

Code -0./

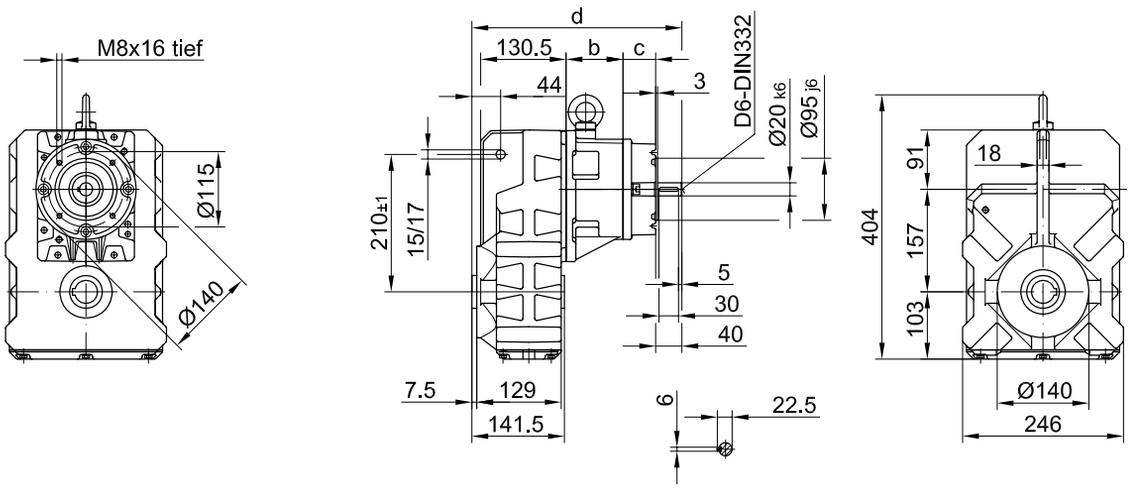

Code -.4/

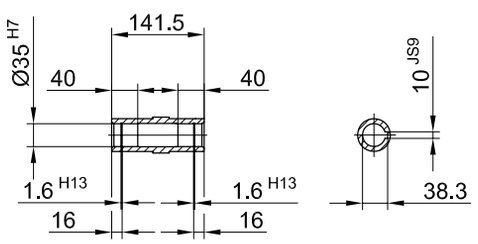

Code -.1/

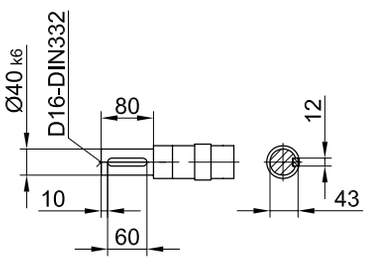

Code -.5/

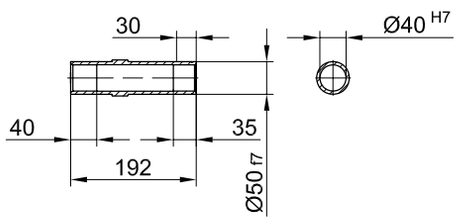

	b	c	d
BF30	87	50	321
BF30Z	141.5	39	364.5

Flansch mit Gewindelöchern

Code -7./

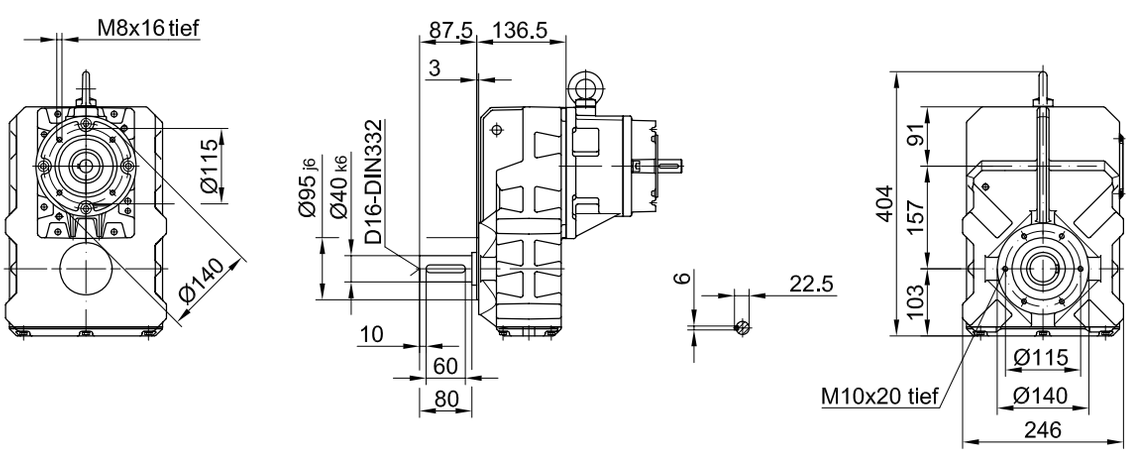

The actual gearbox design can vary from the geometry shown.

BF30-BF30Z-SN

Flansch mit Durchgangslöchern

Code -3./

(Code -2./)

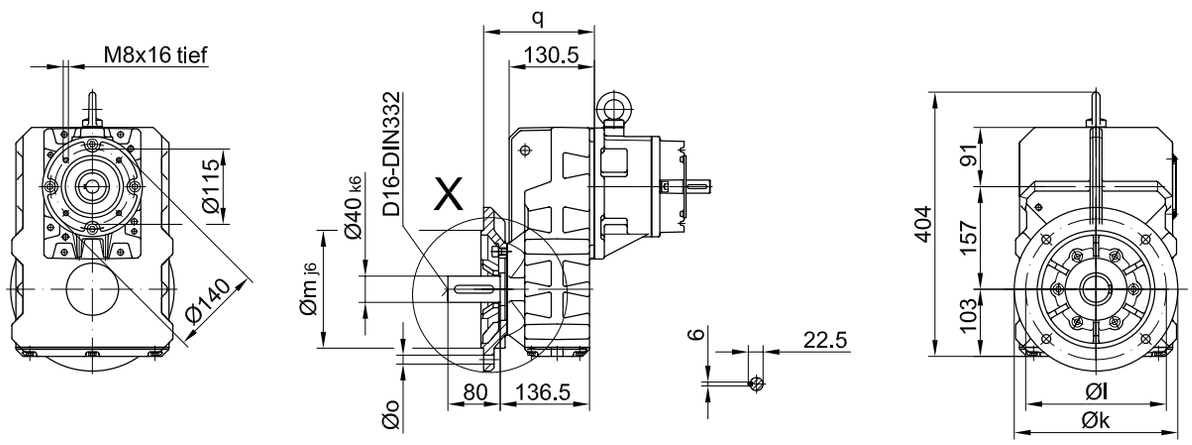

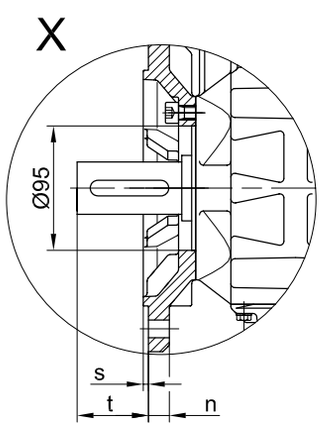

Flanschmasse

BF30(Z)	k	l	m	n	o	q	s	t
Standard -3./	250	215	180	16	13.5	169.5	4	54.5
klein -2./	200	165	130	12	11	160.5	3.5	63.5

Fuss mit Gewindelöchern links und rechts

Code -6.LR/

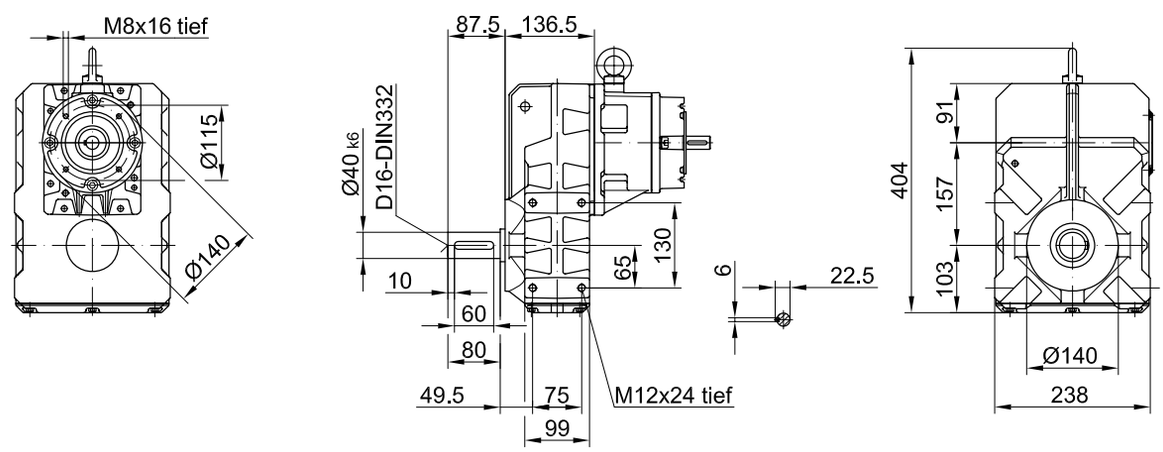

The actual gearbox design can vary from the geometry shown.

Input group

Dimensions of input group parallel shaft geard motors SN

BF40-BF40Z-SN

mit Drehmomentstütze

Code -0./

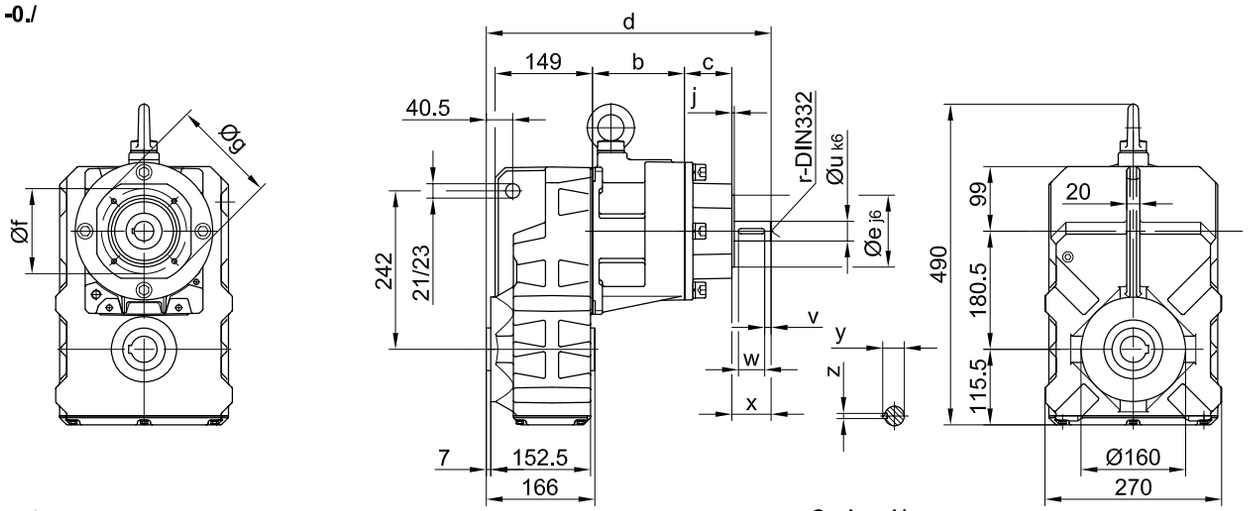

Code -.4/

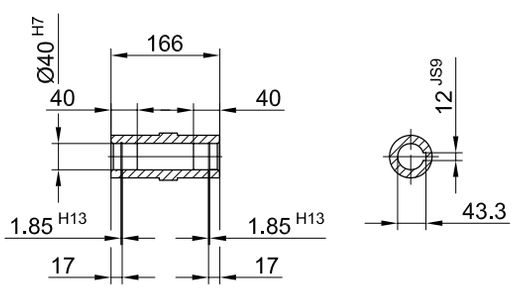

Code -.1/

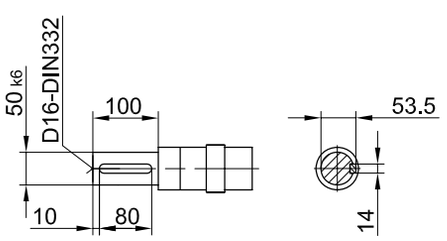

Code -.5/

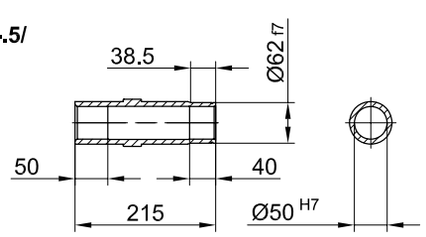

	a	b	c	d	e	f	g	h	i	j
BF40	445	140.5	72.5	435.5	110	130	160	M8	16	3.5
BF40Z	490	167.5	50	420	95	115	140	M8	16	3
	r	u	v	w	x	y	z			
BF40	D10	30	10	40	60	33	8			
BF40Z	D6	20	5	30	40	22.5	6			

Flansch mit Gewindelöchern

Code -7./

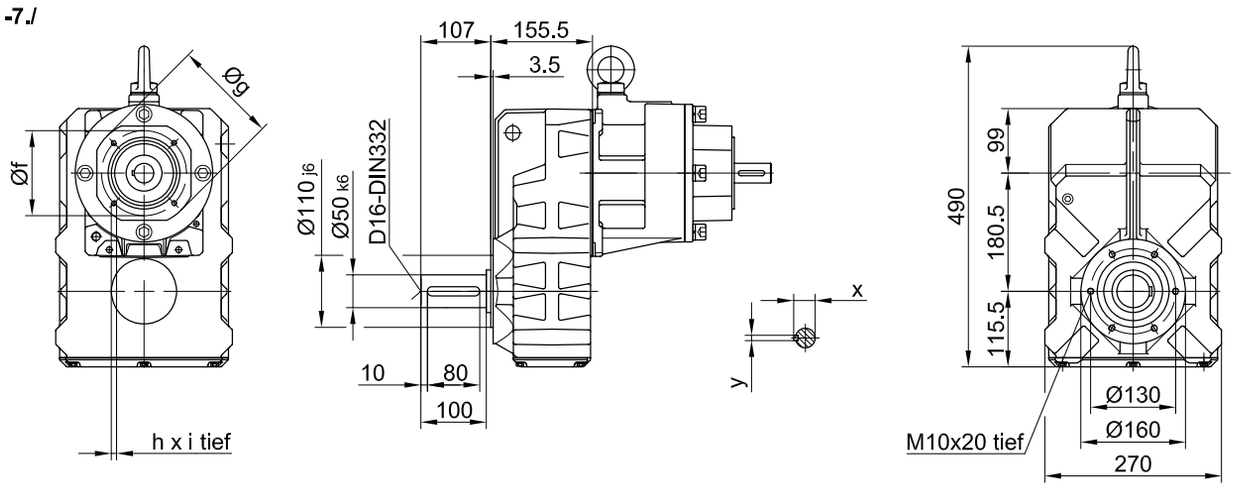

The actual gearbox design can vary from the geometry shown.

BF40-BF40Z-SN

Flansch mit Durchgangslöchern

Code -3./

(Code -4./)

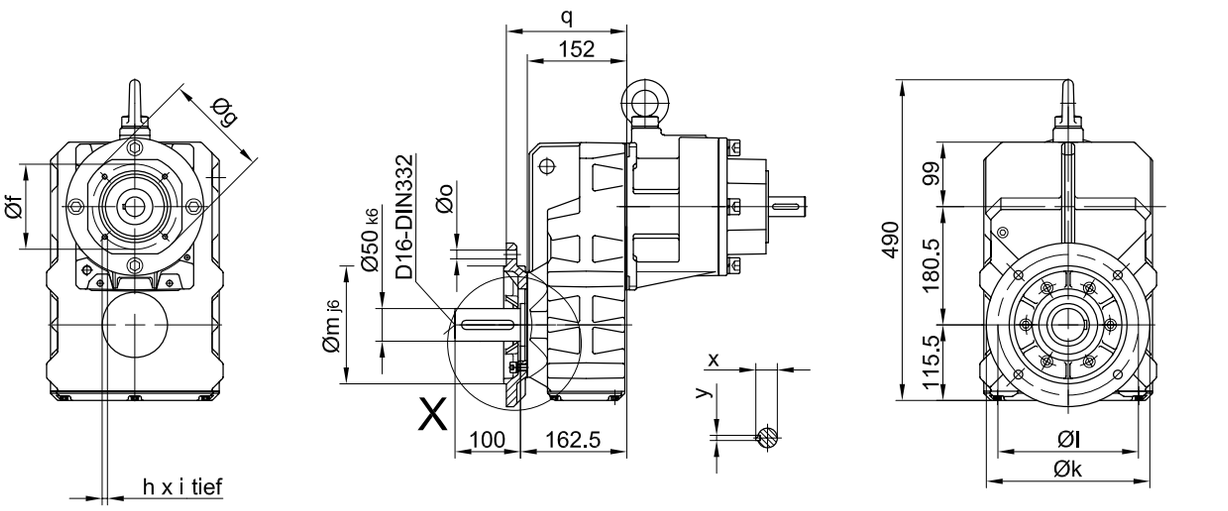

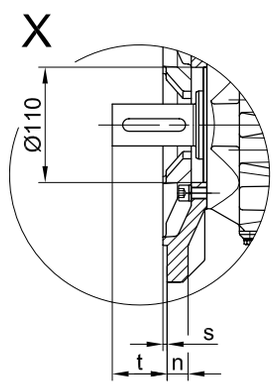

Flanschmasse

BF40(Z)	k	l	m	n	o	q	s	t
Standard -3./	250	215	180	16	13.5	184	4	78.5
gross -4./	300	265	230	20	13.5	190	4	72.5

Fuss mit Gewindelöchern links und rechts

Code -6.LR/

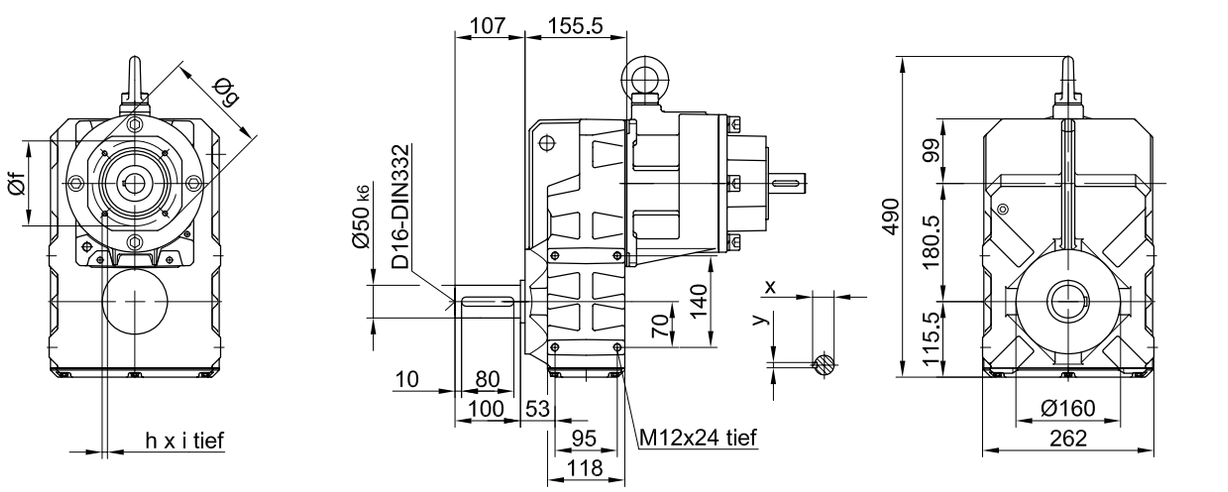

The actual gearbox design can vary from the geometry shown.

Input group

Dimensions of input group parallel shaft geard motors SN

BF50-BF50Z-SN

it Drehmomentstütze

ode -0./

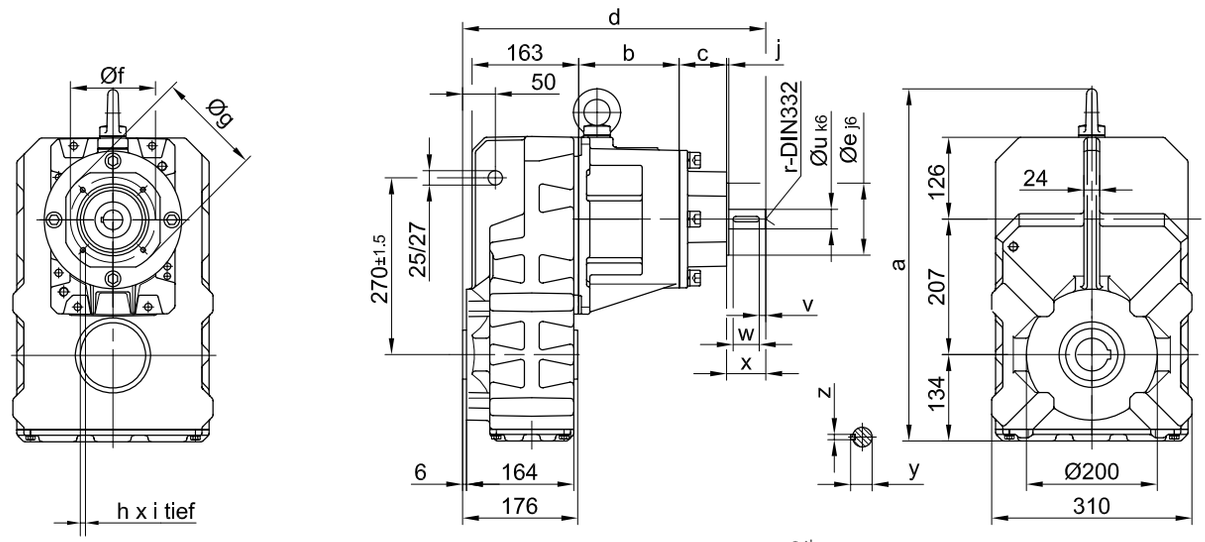

ode -.4/

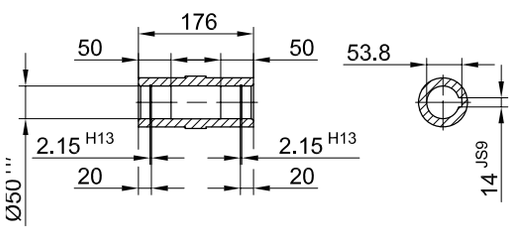

Code -.1/

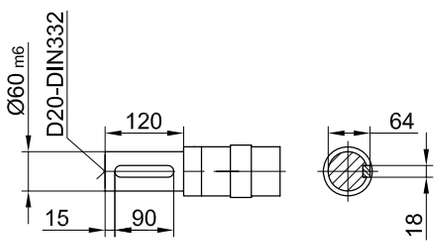

ode -.5/

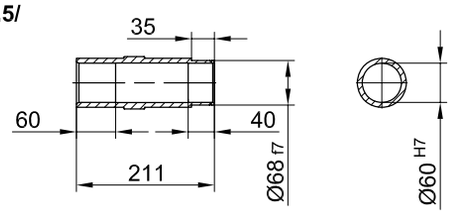

	a	b	c	d	e	f	g	h	i	j
BF50	538	153.5	72.5	463.5	110	130	160	M8	16	3.5
BF50Z	530	184	50	451.5	95	115	140	M8	16	3
	r	u	v	w	x	y	z			
BF50	D10	30	10	40	60	33	8			
BF50Z	D6	20	5	30	40	22.5	6			

ansch mit Gewindelöchern

ode -7./

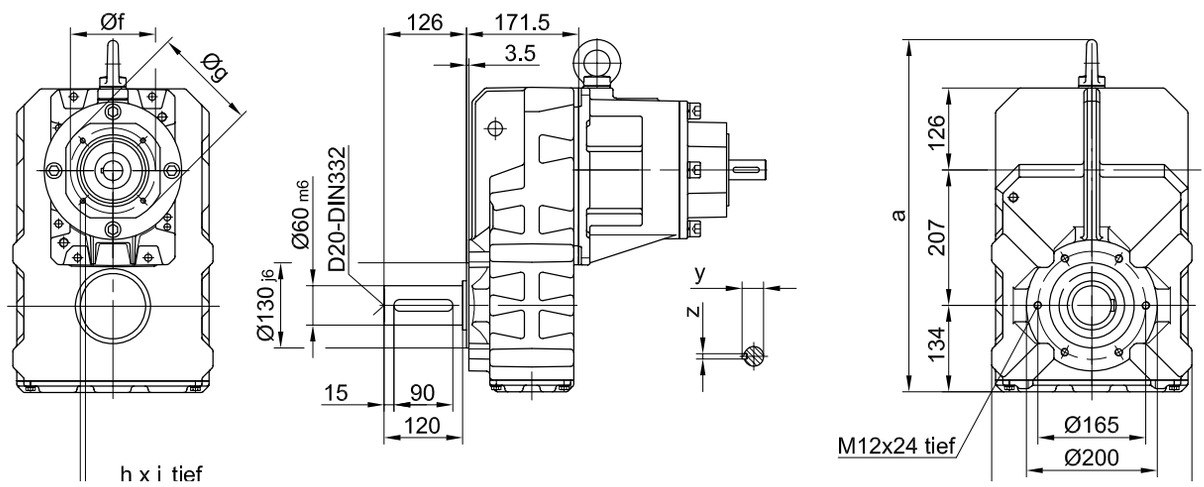

The actual gearbox design can vary from the geometry shown.

BF50-BF50Z-SN

Flansch mit Durchgangslöchern

Code -3./

(Code -2./)

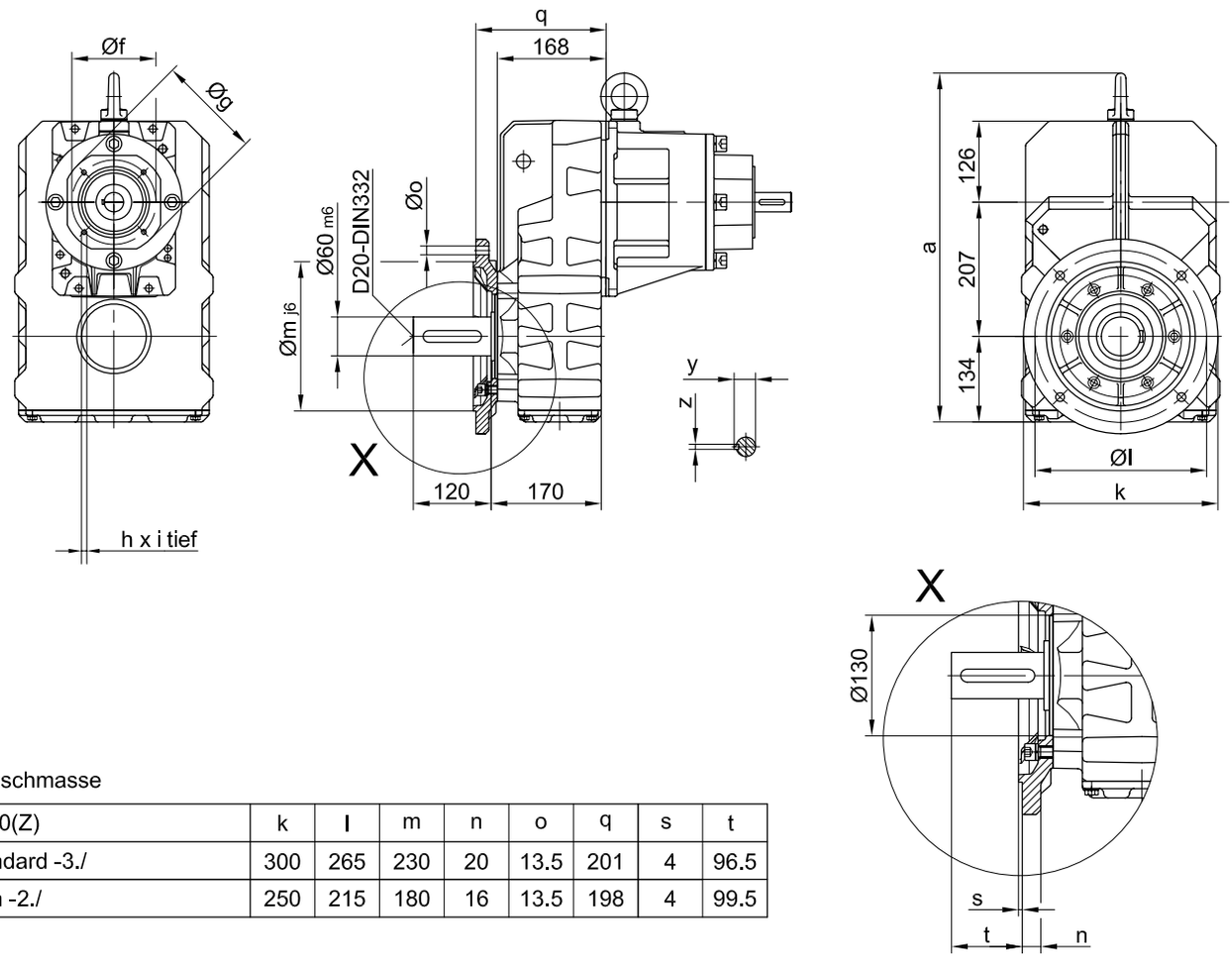

Flanschmasse

BF50(Z)	k	l	m	n	o	q	s	t
Standard -3./	300	265	230	20	13.5	201	4	96.5
klein -2./	250	215	180	16	13.5	198	4	99.5

Fuss mit Gewindelöchern links und rechts

Code -6.LR/

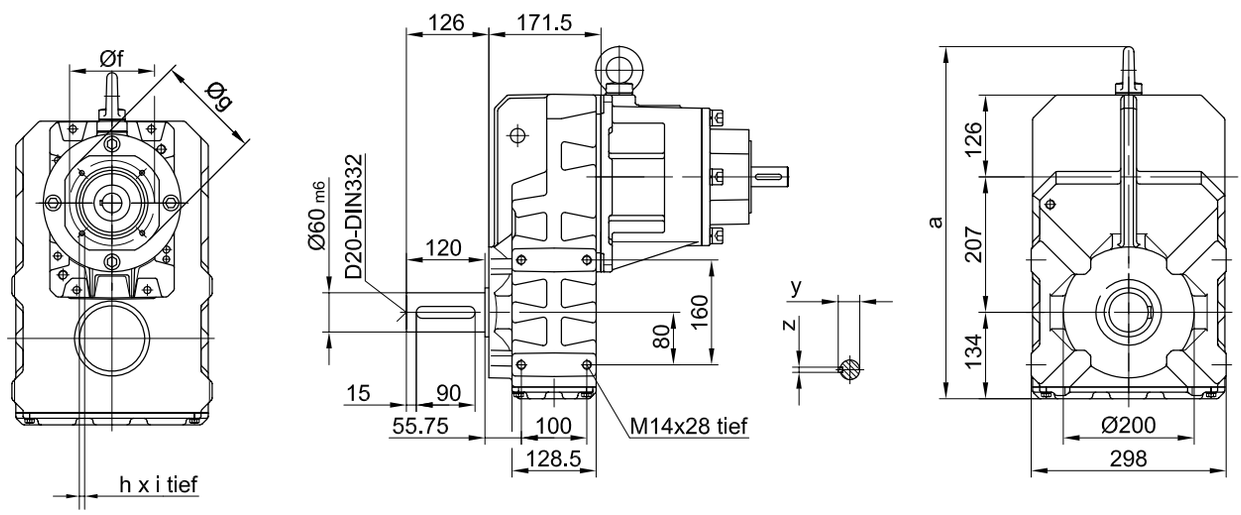

The actual gearbox design can vary from the geometry shown.

Input group

Dimensions of input group parallel shaft geard motors SN

BF60-BF60Z-SN

mit Drehmomentstütze

Code -0./

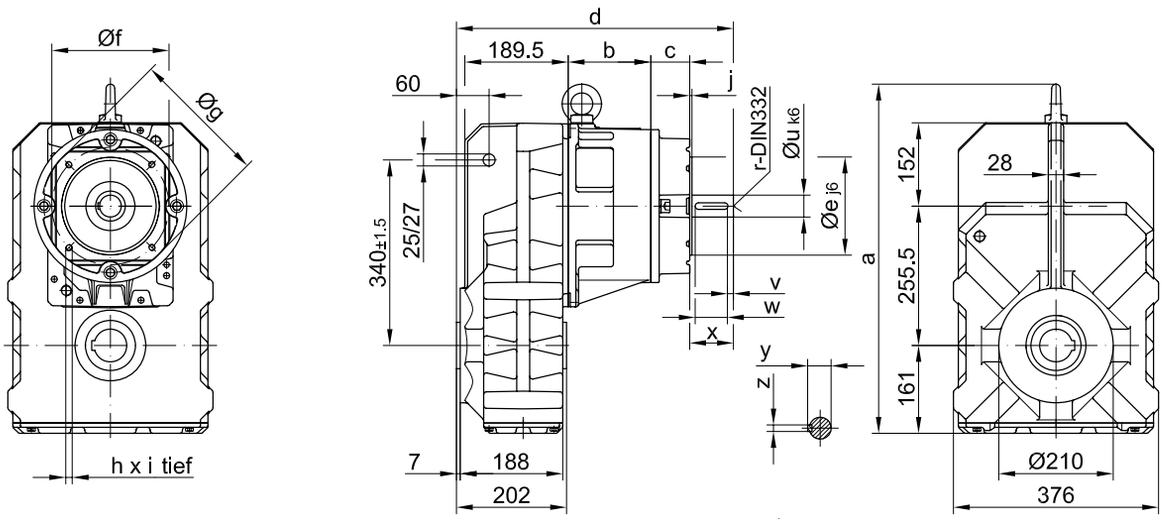

Code -.4/

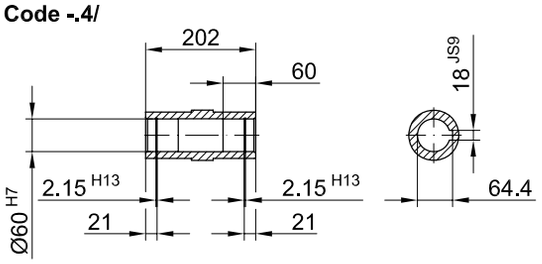

Code -.1/

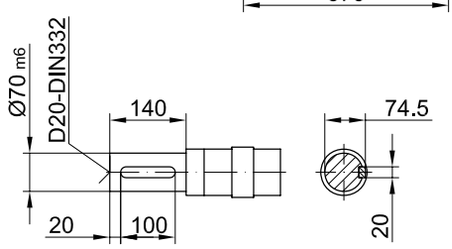

Code -.5/

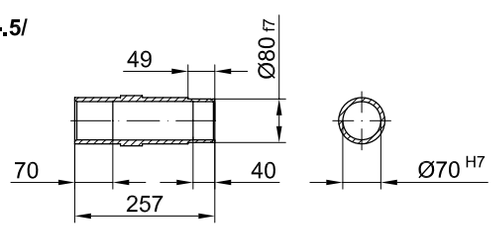

	a	b	c	d	e	f	g	h	i	j
BF60	640	151.5	71.5	508	180	215	250	M12	24	4
BF60Z	640	261.5	72.5	599	110	130	160	M8	16	3.5
	r	u	v	w	x	y	z			
BF60	D16	40	10	60	80	43	12			
BF60Z	D10	30	10	40	60	33	8			

Flansch mit Gewindelöchern

Code -7./

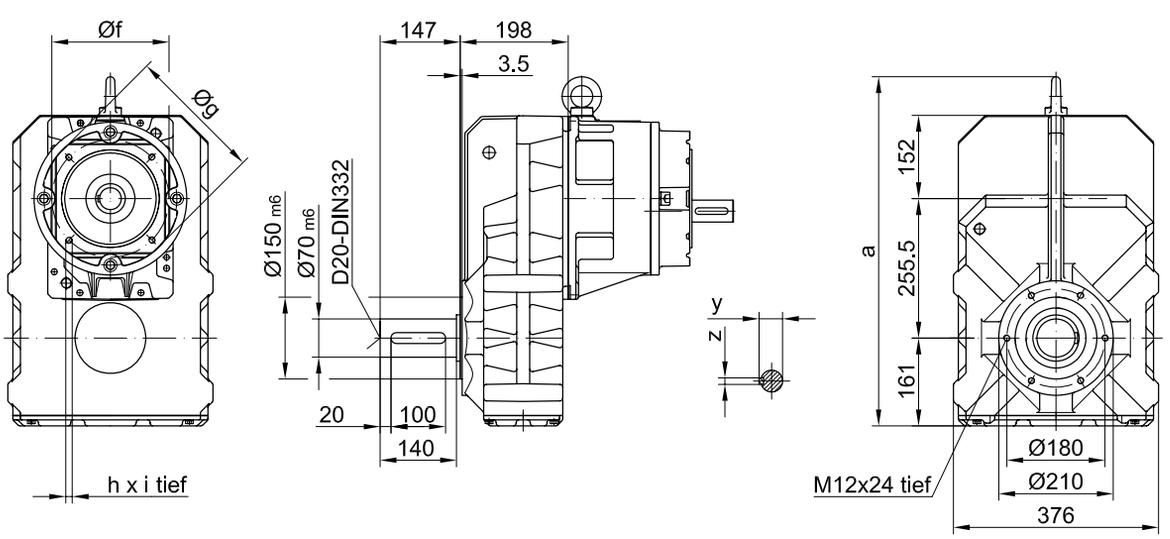

The actual gearbox design can vary from the geometry shown.

BF60-BF60Z-SN

Flansch mit Durchgangslöchern

Code -3./

(Code -2./)

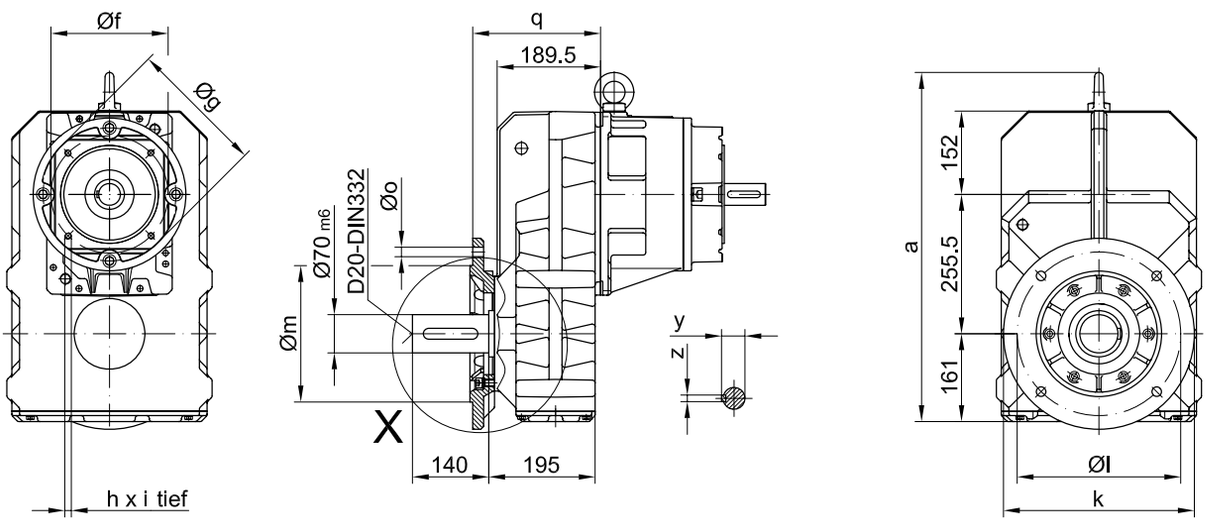

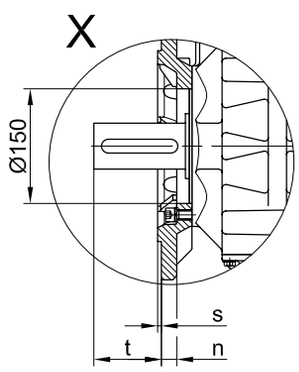

Flanschmasse

BF60(Z)	k	l	m	n	o	q	s	t
Standard -3./	350	300	250 $_{h6}$	20	17.5	234.5	5	110.5
klein -2./	300	265	230 $_{j6}$	20	13.5	242.5	4	102.5

Fuss mit Gewindelöchern links und rechts

Code -6.LR/

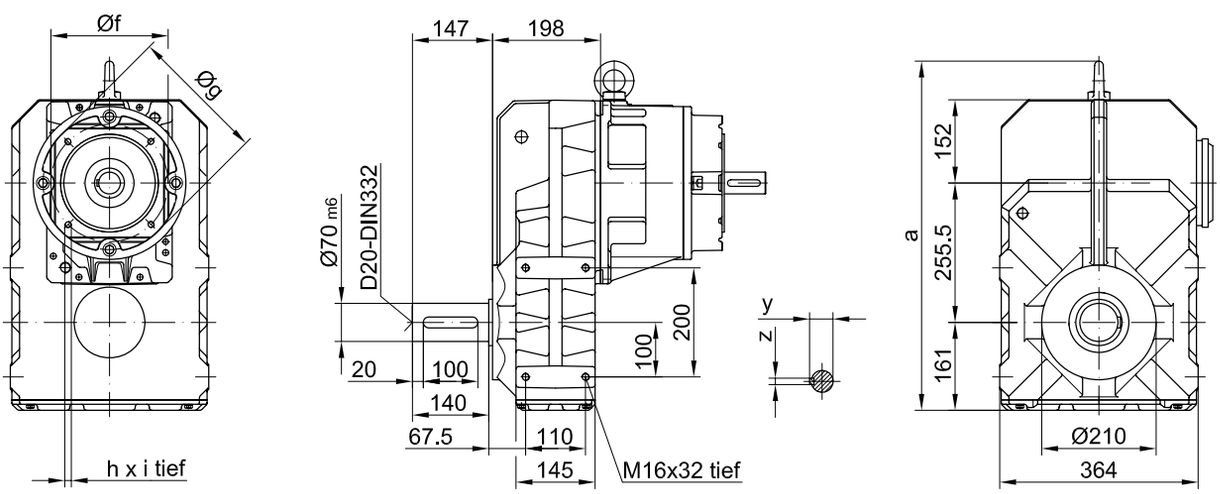

The actual gearbox design can vary from the geometry shown.

Input group

Dimensions of input group parallel shaft geard motors SN

BF70-BF70Z-SN

mit Drehmomentstütze

Code -0./

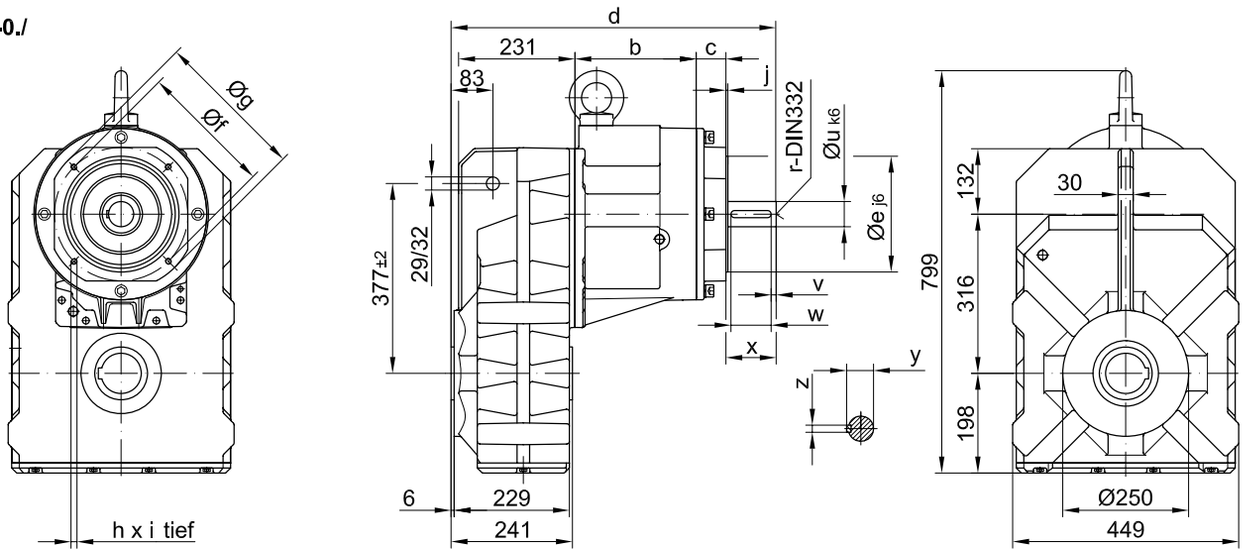

Code -.4/

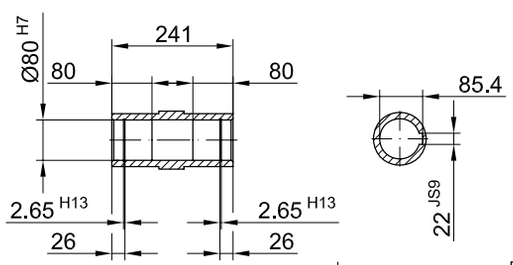

Code -.1/

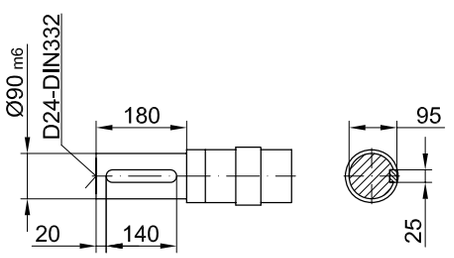

Code -.5/

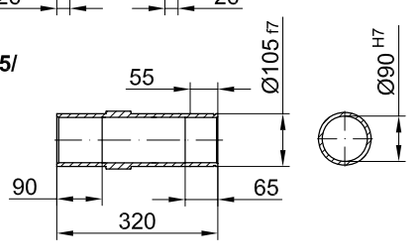

	a	b	c	d	e	f	g	h	i	j
BF70	799	241	59	646	230	265	300	M12	24	4
BF70Z	737	282.5	72.5	661	110	130	160	M8	16	3.5
	r	u	v	w	x	y	z			
BF70	D16	50	10	80	100	53.5	14			
BF70Z	D10	30	10	40	60	33	8			

Flansch mit Gewindelöchern

Code -7./

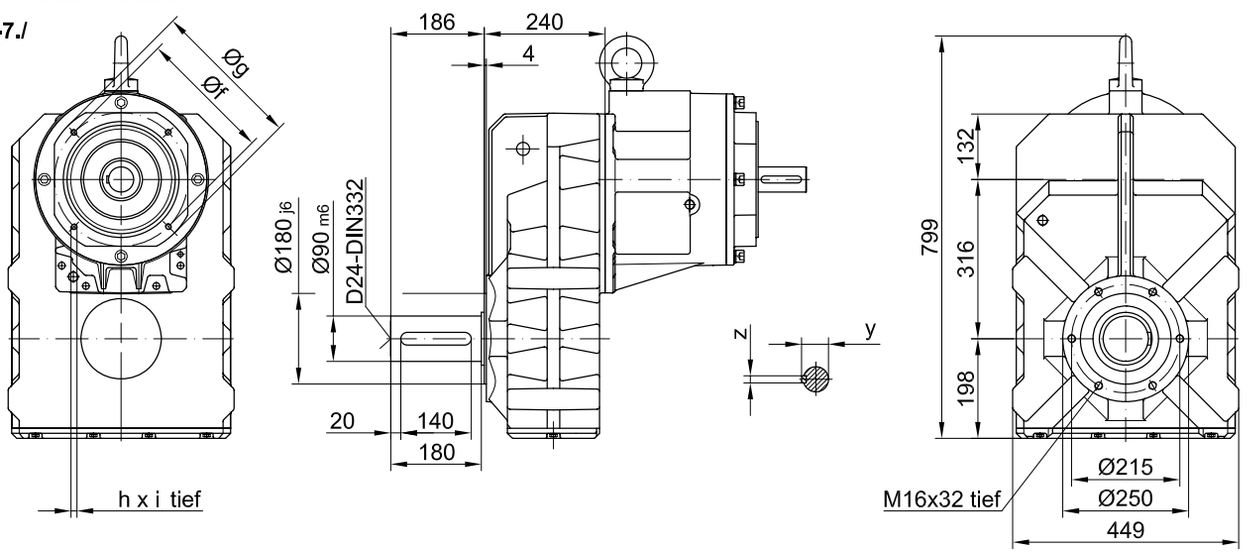

The actual gearbox design can vary from the geometry shown.

BF70-BF70Z-SN

Flansch mit Durchgangslöchern

Code -3./
(Code -2./)
(Code -4./)

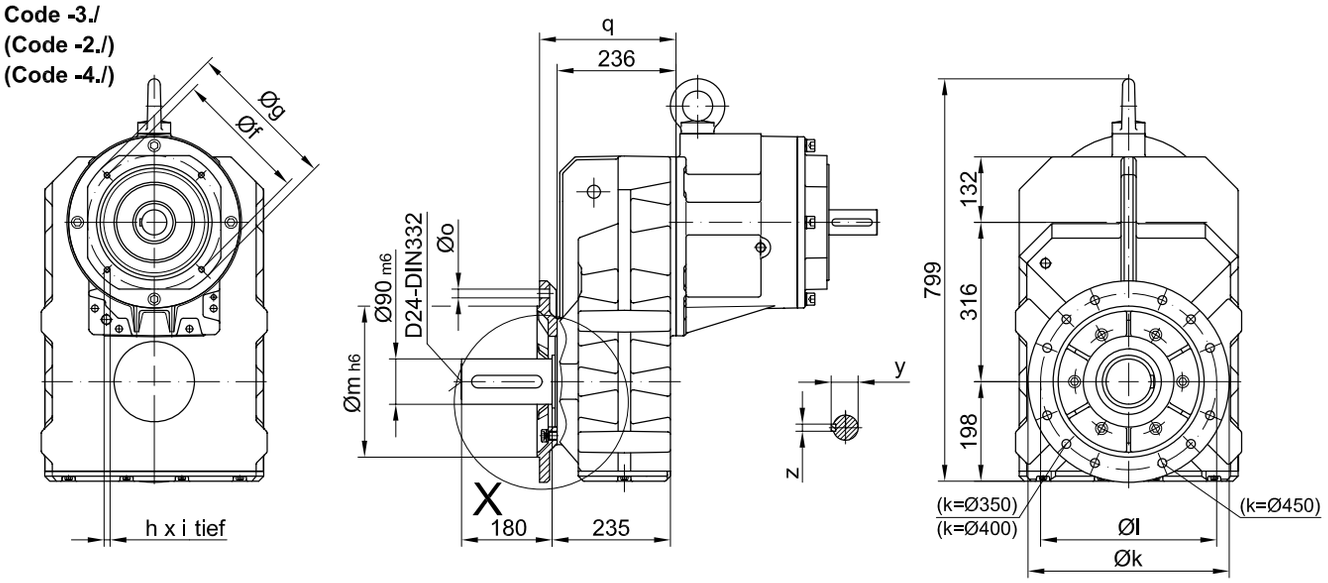

Flanschmasse

BF70(Z)	k	l	m	n	o	q	s	t
Standard -3./	400	350	300	20	4xØ17.5	271	5	155
klein -2./	350	300	250	20	4xØ17.5	271	5	155
gross -4./	450	400	350	22	8xØ17.5	281	5	145

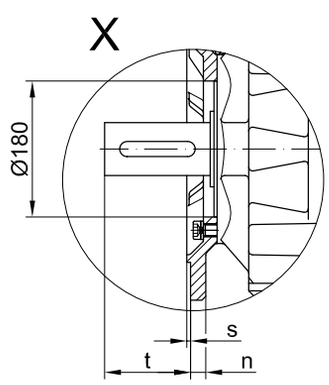

Fuss mit Gewindelöchern links und rechts

Code -6.LR/

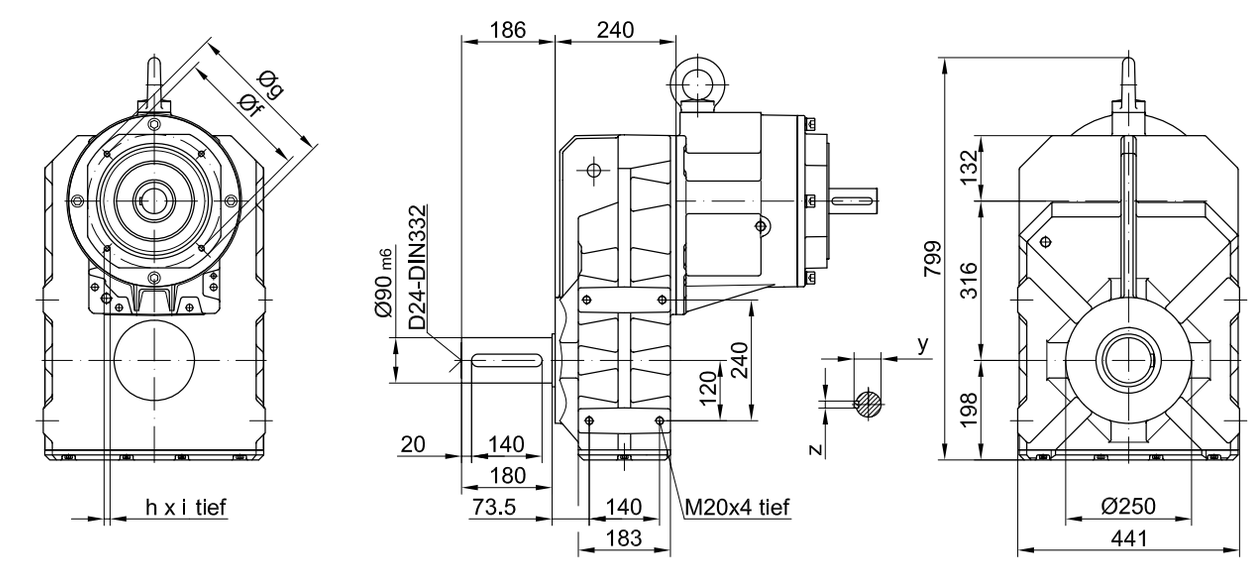

The actual gearbox design can vary from the geometry shown.

Input group

Dimensions of input group parallel shaft geard motors SN

BF80-BF80Z-SN

mit Drehmomentstütze

Code -0./

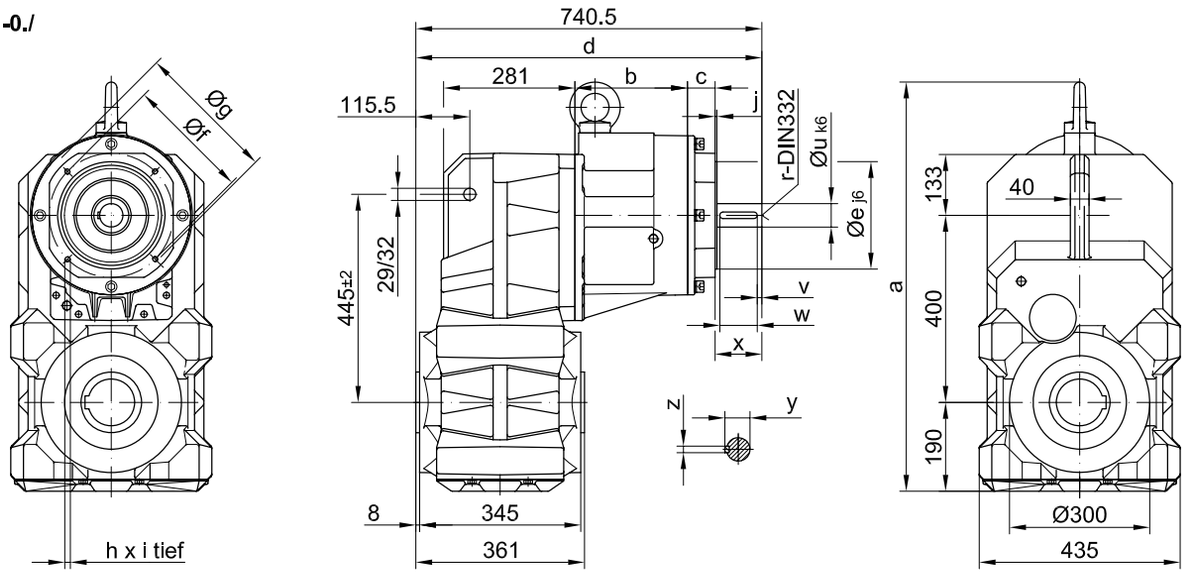

Code -.4/

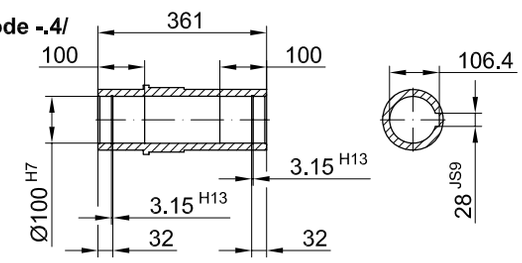

Code -.1/

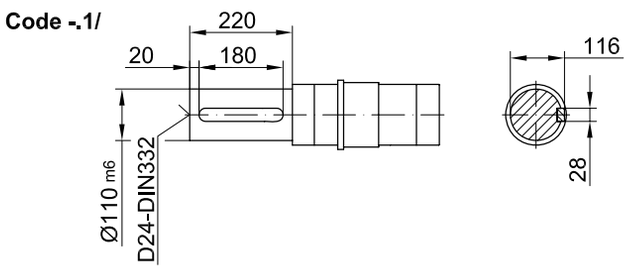

Code -.5/

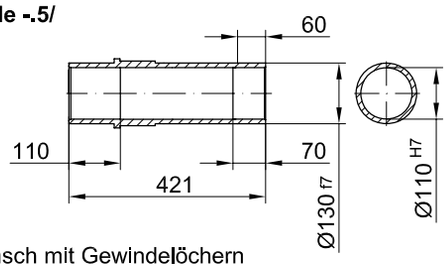

	a	b	c	d	e	f	g	h	i	j
BF80	875	241	59	740	230	265	300	M12	24	4
BF80Z	833	282.5	72.5	755.5	110	130	160	M8	16	3.5
	r	u	v	w	x	y	z			
BF80	D16	50	10	80	100	53.5	14			
BF80Z	D10	30	10	40	60	33	8			

Flansch mit Gewindelöchern

Code -7./

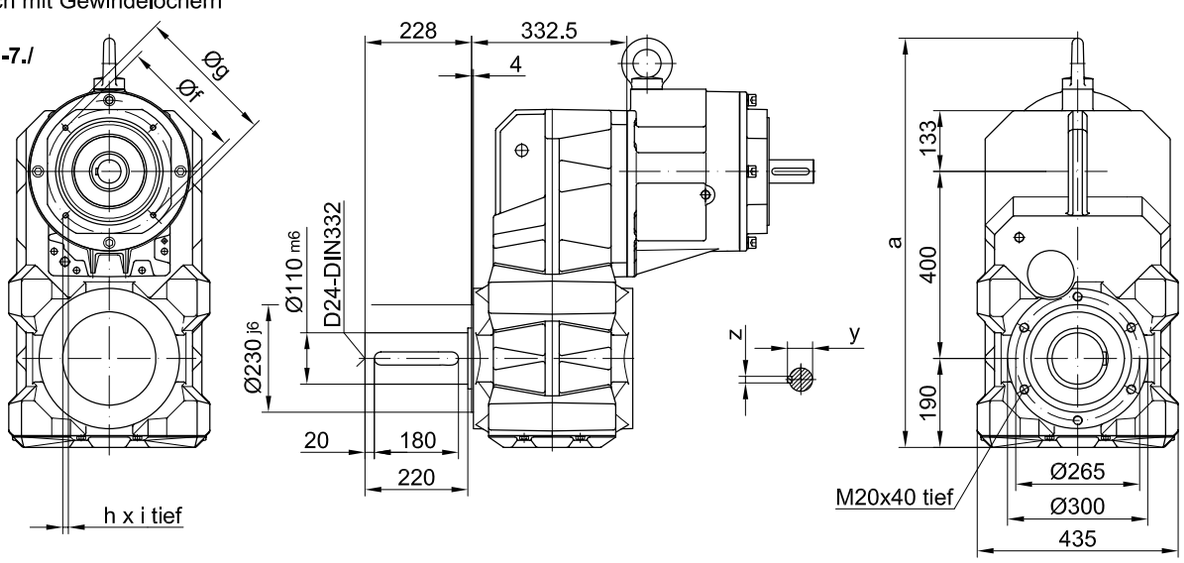

The actual gearbox design can vary from the geometry shown.

BF80-BF80Z-SN

Flansch mit Durchgangslöchern

Code -3./

(Code -4./)

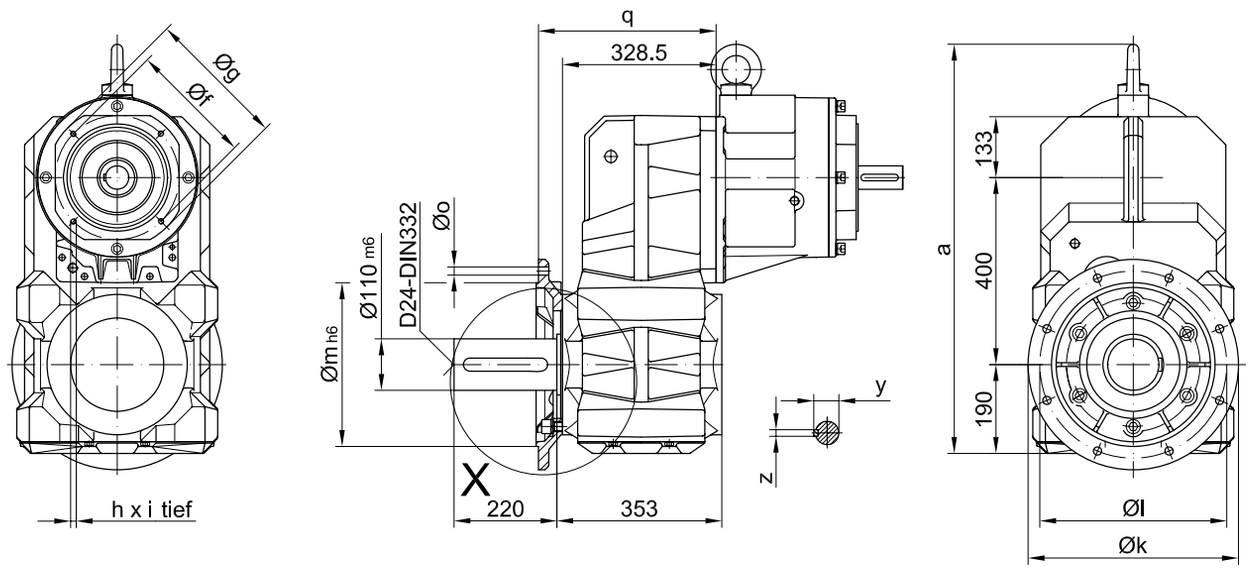

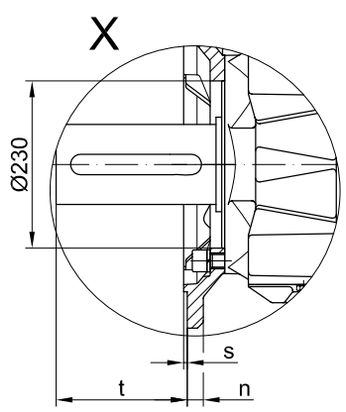

Flanschmasse

BF80(Z)	k	l	m	n	o	q	s	t
Standard -3./	450	400	350	22	17.5	383.5	5	177
gross -4./	550	500	450	22	17.5	388.5	5	172

Fuss mit Gewindelöchern links und rechts

Code -1.LR/

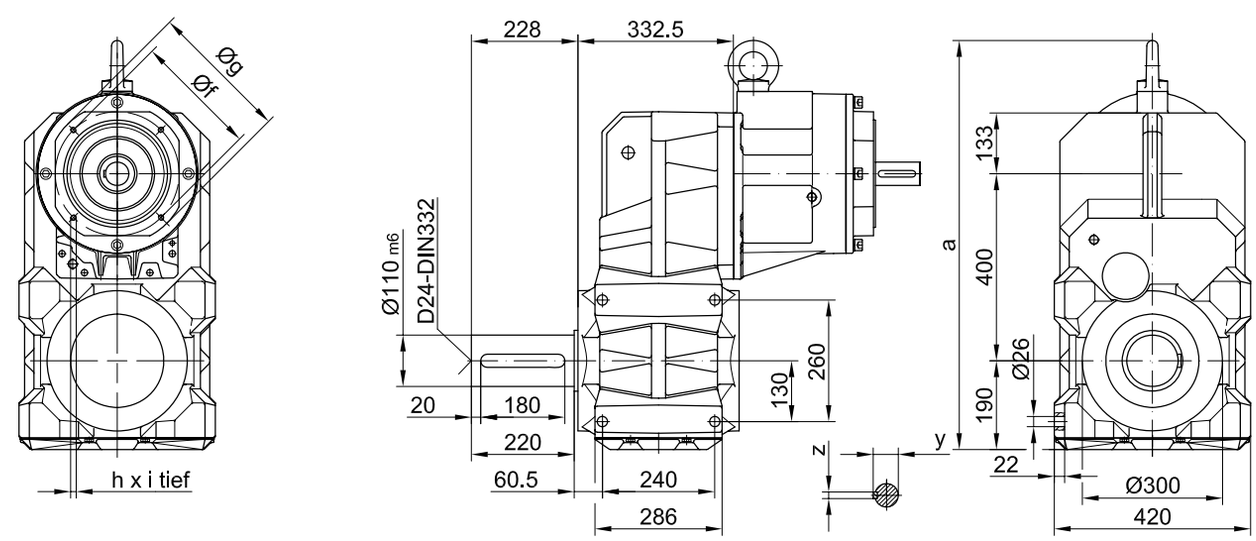

The actual gearbox design can vary from the geometry shown.

Input group

Dimensions of input group parallel shaft geard motors SN

BF90-BF90Z-SN

mit Drehmomentstütze

Code -0./

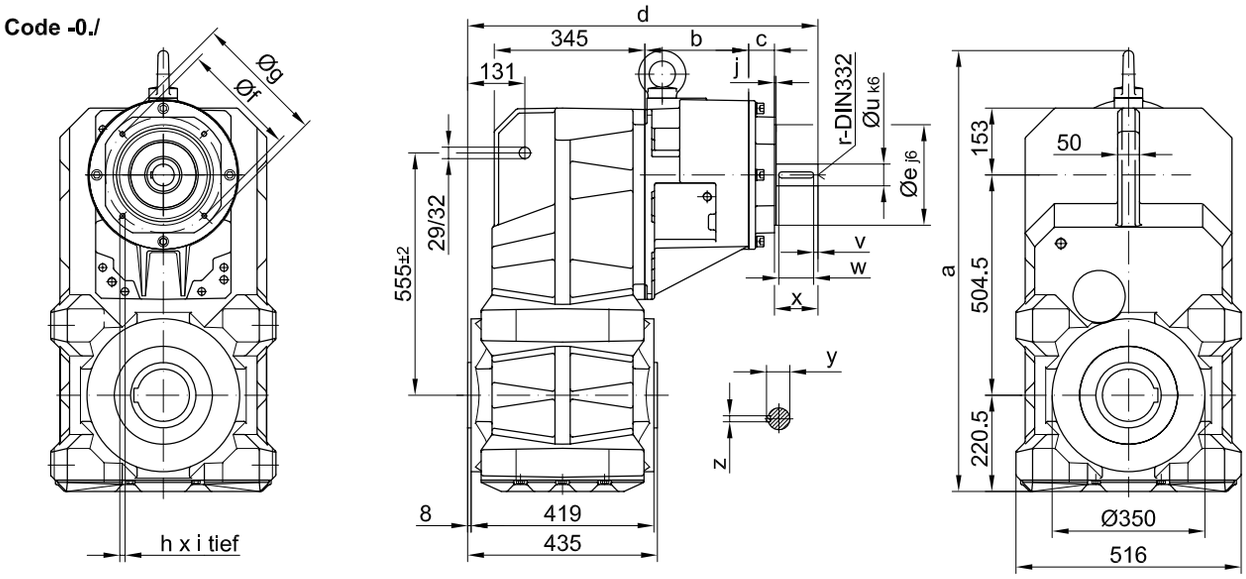

Code -.4/

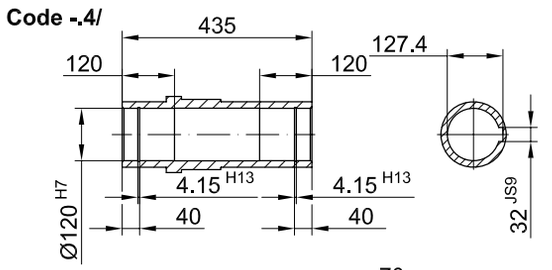

Code -.1/

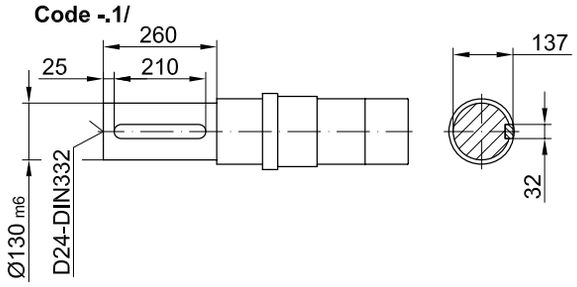

Code -.5/

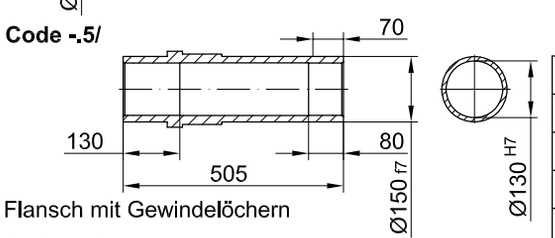

Flansch mit Gewindelöchern

	a	b	c	d	e	f	g	h	i	j
BF90	1010	238	59	803	230	265	300	M12	24	4
BF90Z	988	318.5	71.5	856	180	215	250	M12	24	4
	r	u	v	w	x	y	z			
BF90	D16	50	10	80	100	53.5	14			
BF90Z	D16	40	10	60	80	43	12			

Code -7./

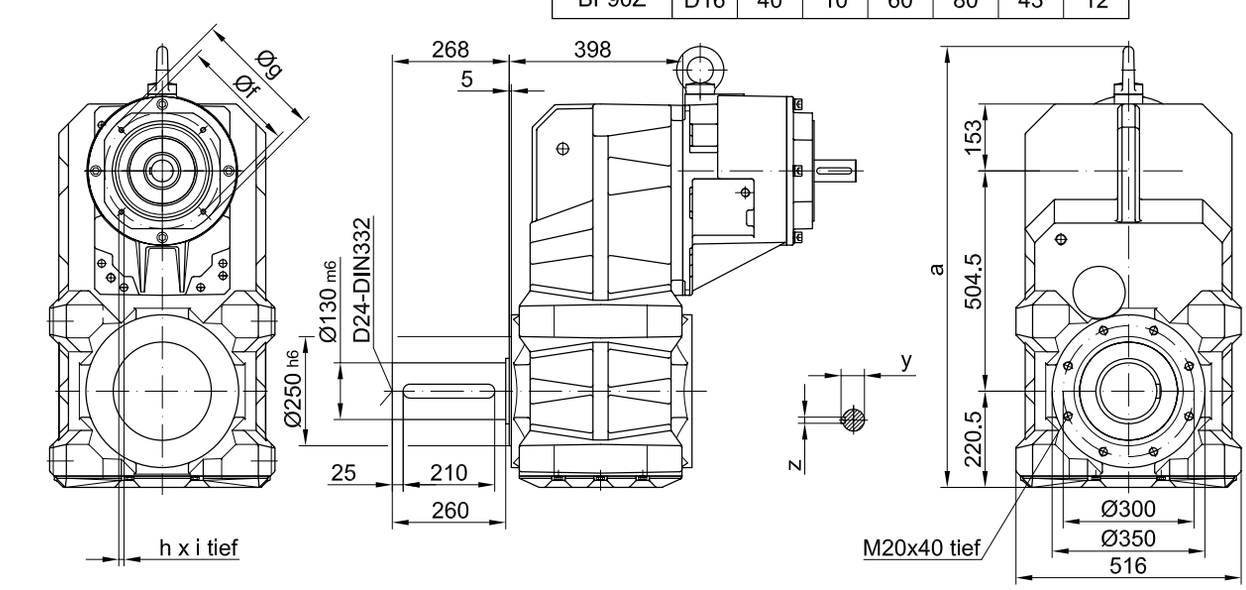

The actual gearbox design can vary from the geometry shown.

BF90-BF90Z-SN

Flansch mit Durchgangslöchern

Code -3./

(Code -4./)

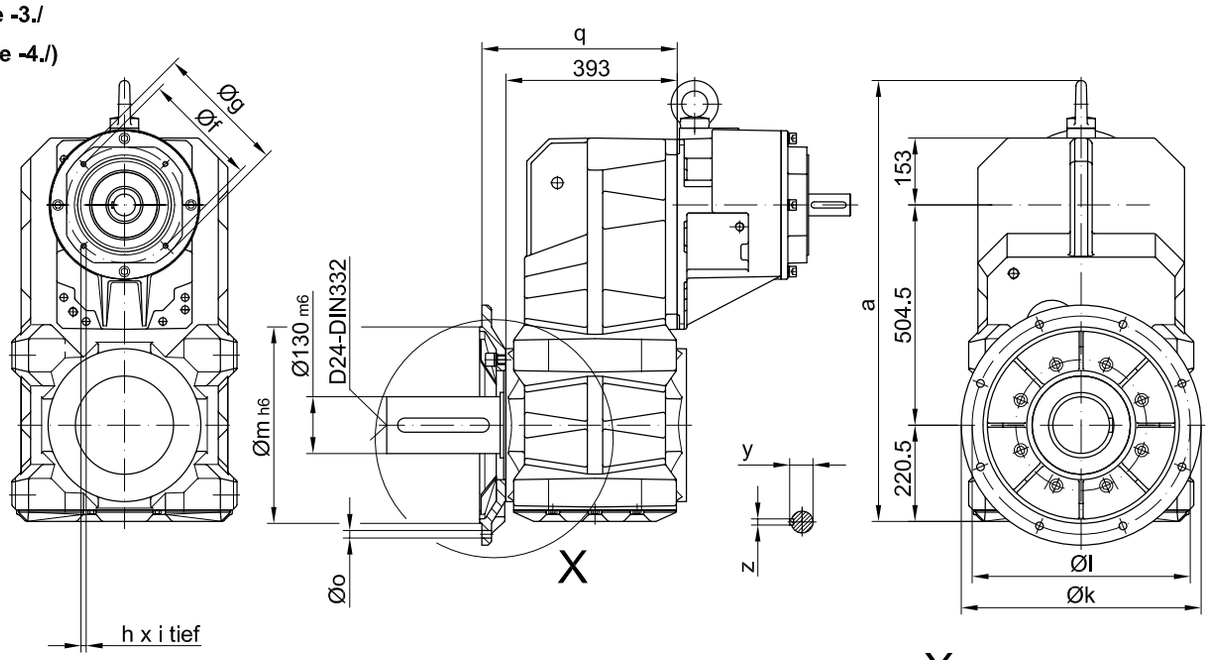

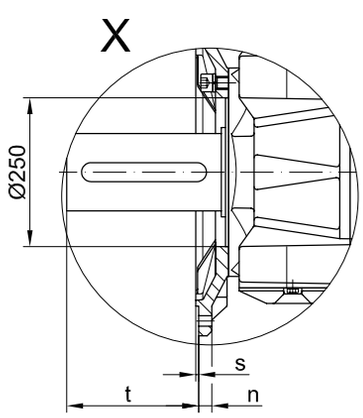

Flanschmasse

BF90(Z)	k	l	m	n	o	q	s	t
Standard -3./	550	500	450	22	17.5	448	5	218
gross -4./	660	600	550	25	22	442	6	224

Fuss mit Gewindelöchern links und rechts

Code -1.LR/

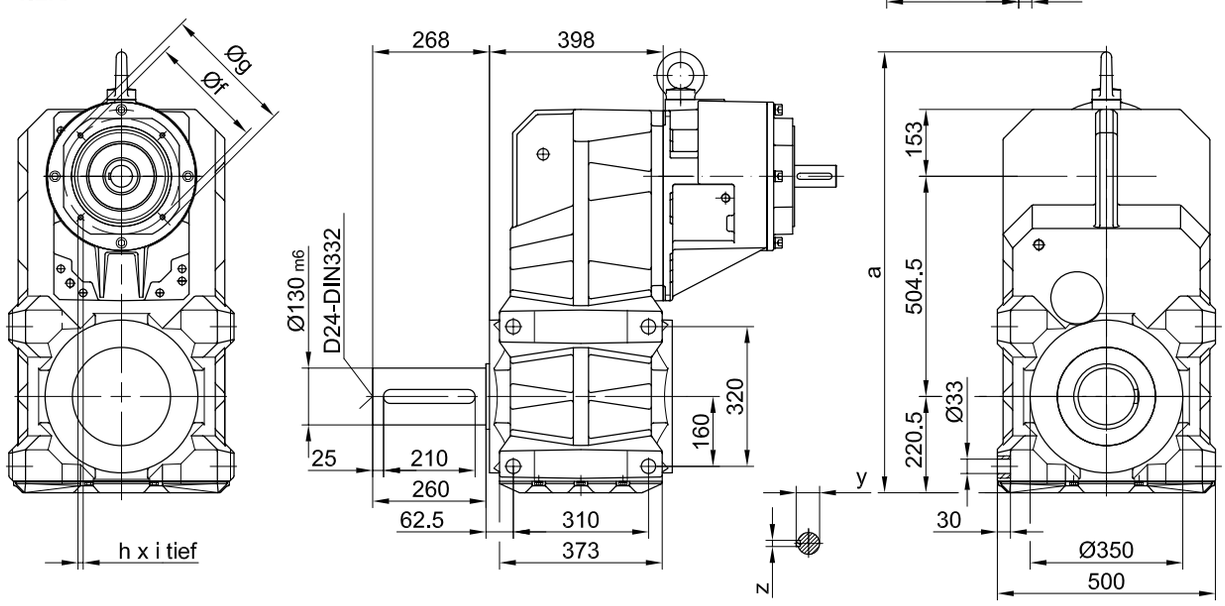

The actual gearbox design can vary from the geometry shown.

Input group

Dimensions of input group bevel geard motors SN

BK10-BK10Z-SN

Flansch mit Durchgangslöchern vorne

Code -3.V/
(Code -2.V/)

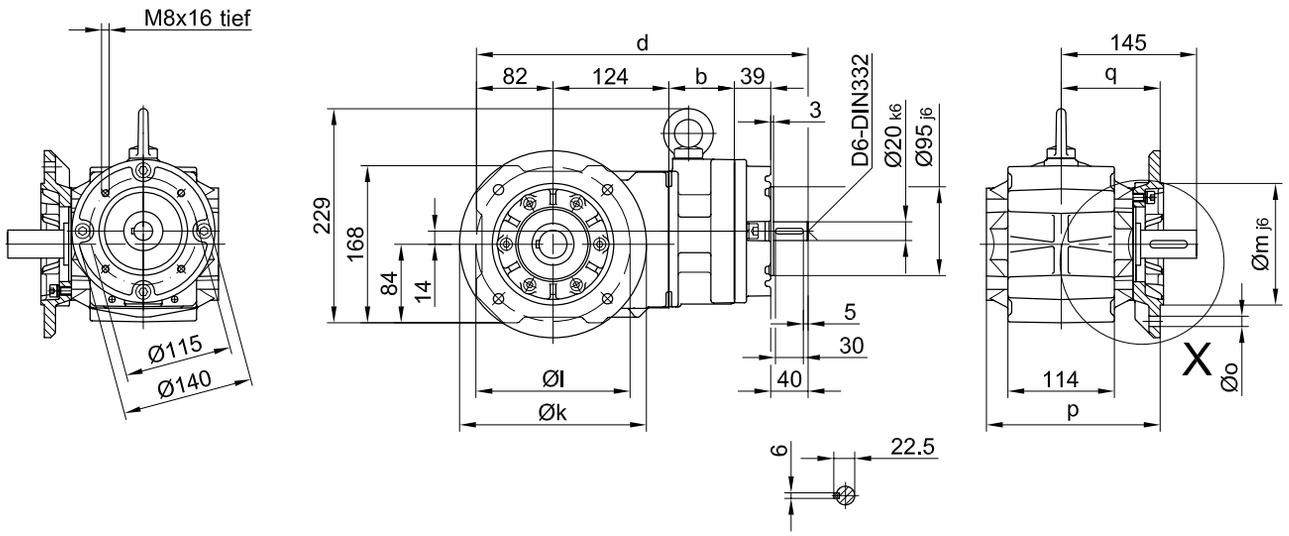

Code -.4/

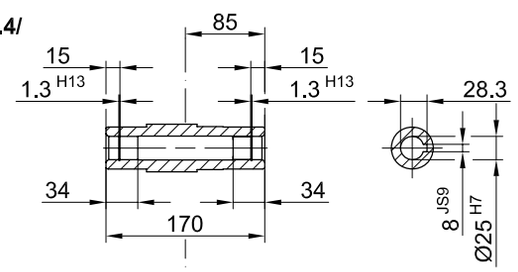

Code -.1/

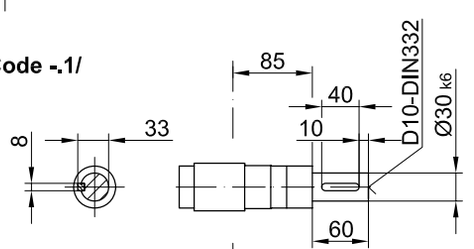

Code -.5/

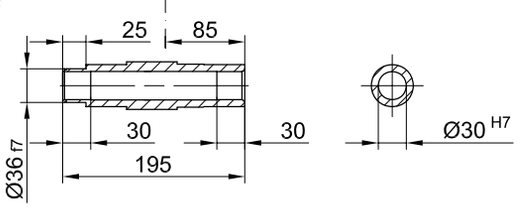

Code -.3/

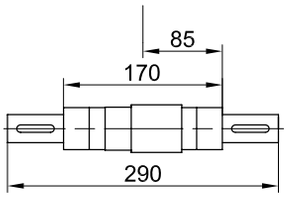

	b	d
BK10	70	355
BK10Z	136	421

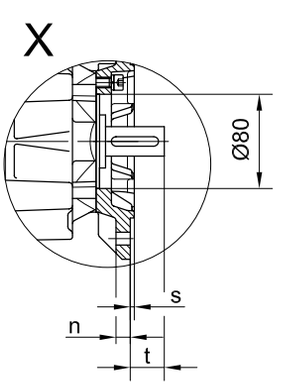

Flanschmasse

BK10(Z)	k	l	m	n	o	p	q	s	t
Standard -3.V/	200	165	130	12	11	186.5	106	3.5	39
klein -2.V/	160	130	110	10	9	179.5	99	3.5	46

The actual gearbox design can vary from the geometry shown.

BK10-BK10Z-SN

Flansch mit Gewindelöchern vorne

Code -7.V/

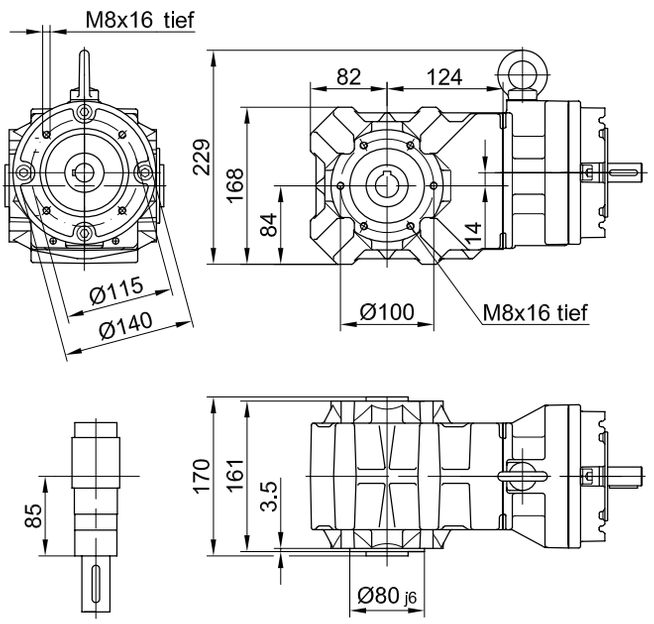

mit Drehmomentstütze vorne

Code -5.V/

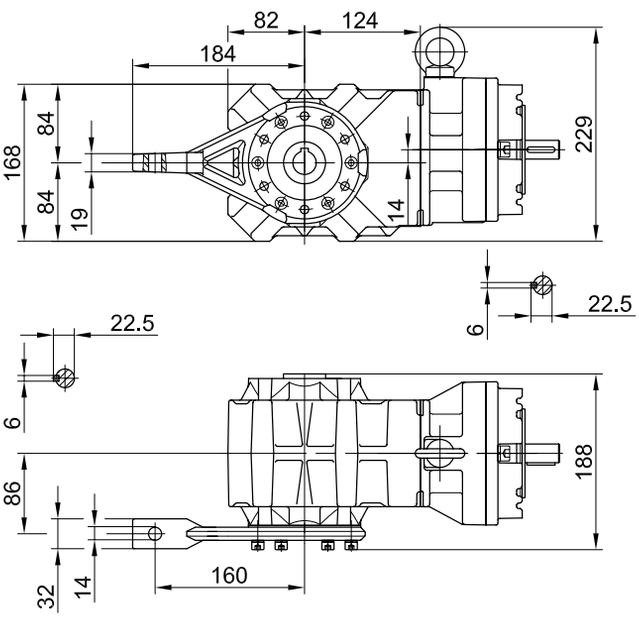

Fuss mit Gewindelöchern unten

Code -6.U/

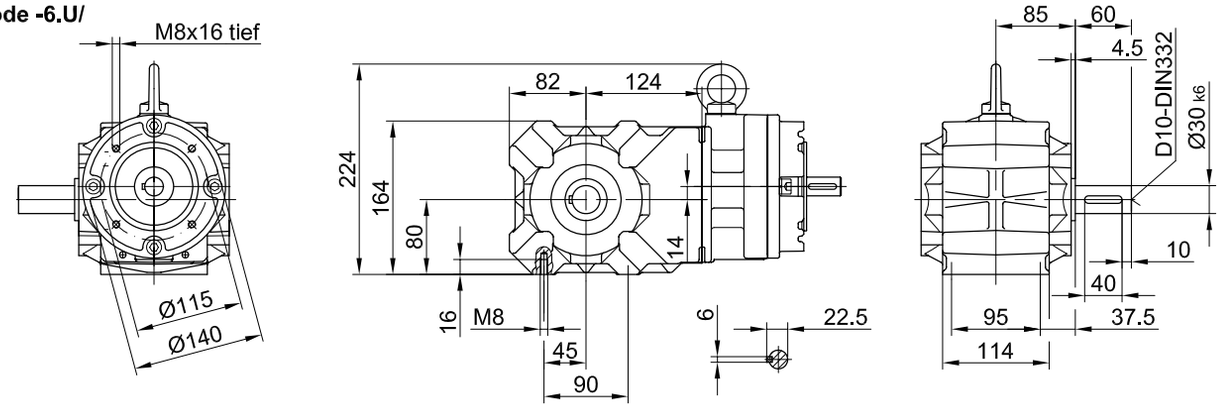

Fuss mit Durchgangslöchern unten

Code -1.U/

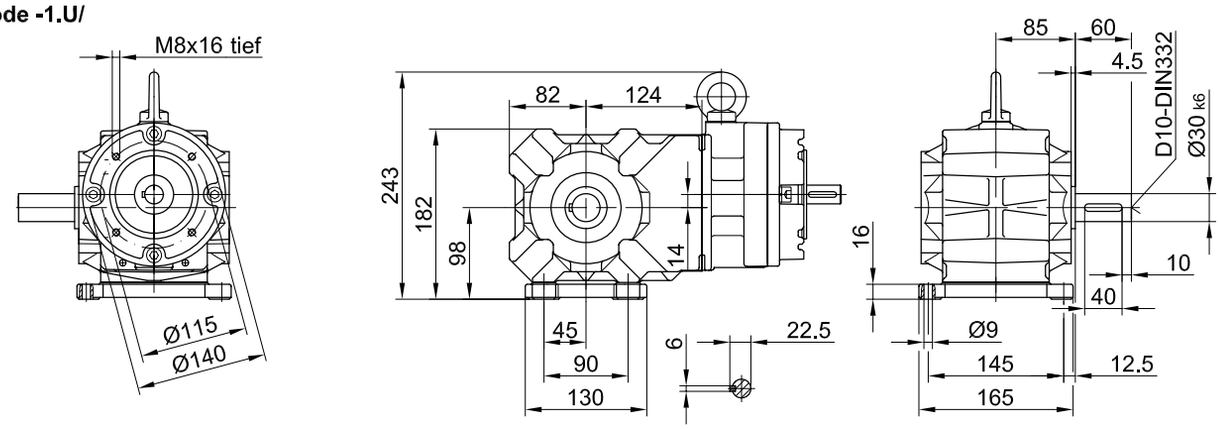

The actual gearbox design can vary from the geometry shown.

Input group

Dimensions of input group bevel geard motors SN

BK20-BK20Z-SN

Flansch mit Durchgangslöchern vorne

Code -3.V/
(Code -2.V/)

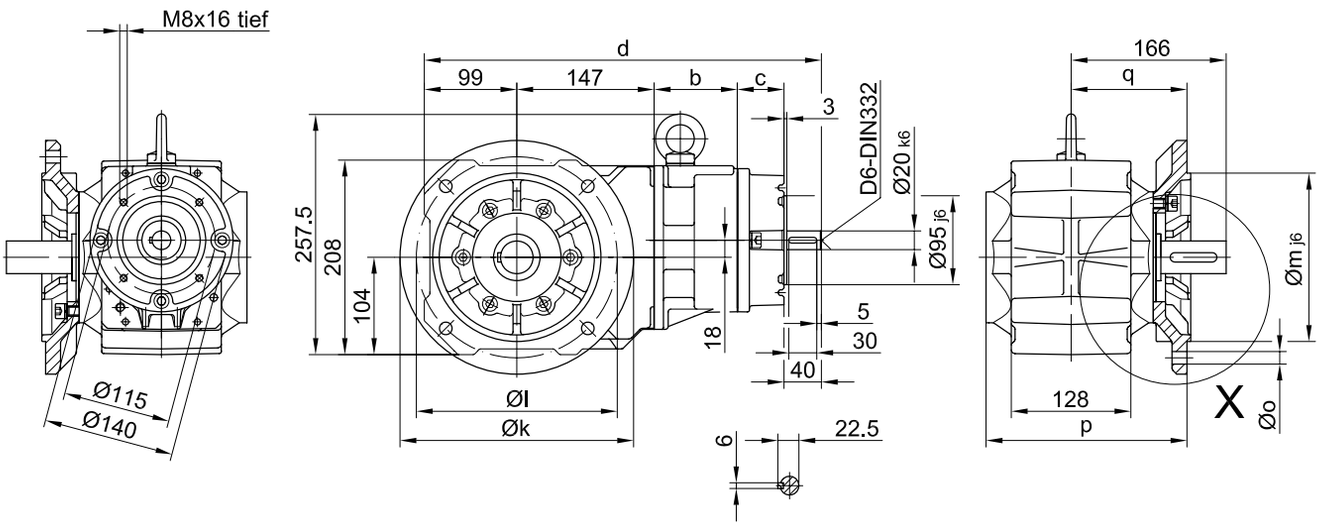

Code -.4/

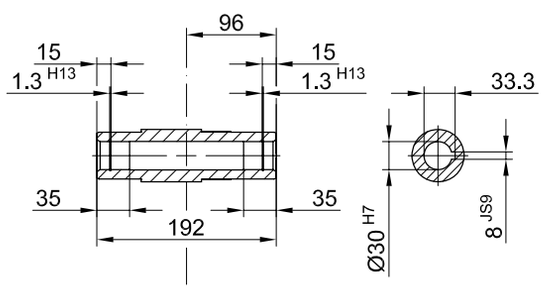

Code -.1/

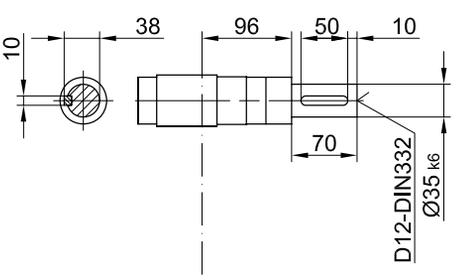

Code -.5/

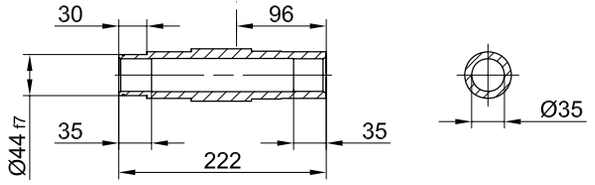

Code -.3/

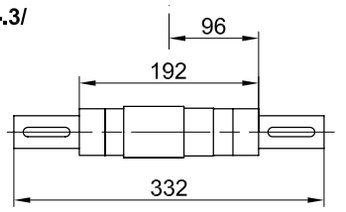

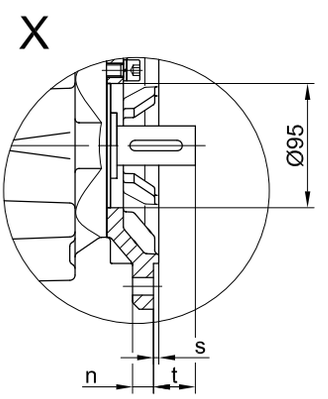

	b	c	d
BK20	89	50	425
BK20Z	150	39	475

Flanschmasse

BK20(Z)	k	l	m	n	o	p	q	s	t
Standard -3.V/	250	215	180	16	13.5	215.5	124	4	42
klein -2.V/	200	165	130	12	11	206.5	115	3.5	51

The actual gearbox design can vary from the geometry shown.

BK20-BK20Z-SN

Flansch mit Gewindelöchern vorne

Code -7.V/

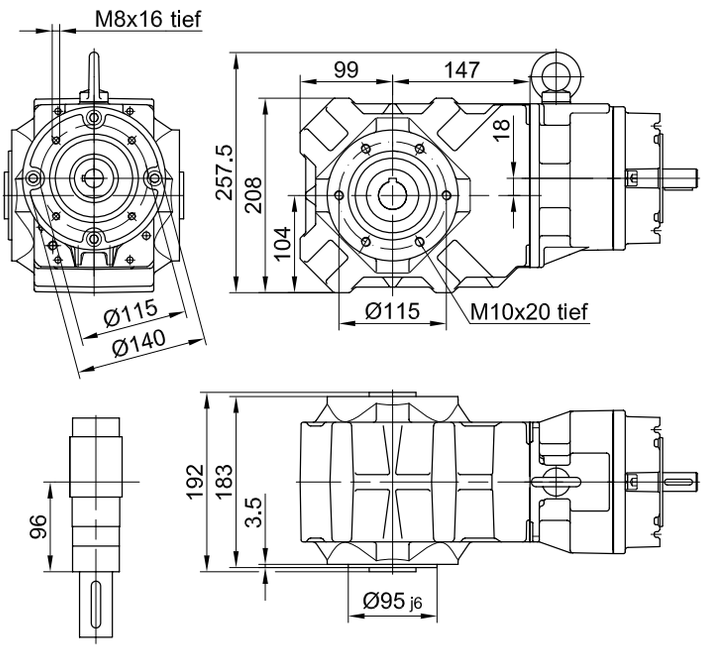

mit Drehmomentstütze vorne

Code -5.V/

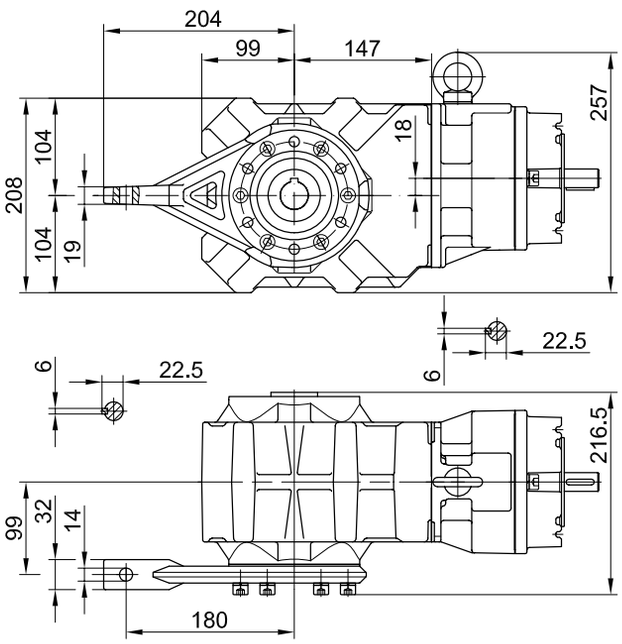

Fuss mit Gewindelöchern unten

Code -6.U/

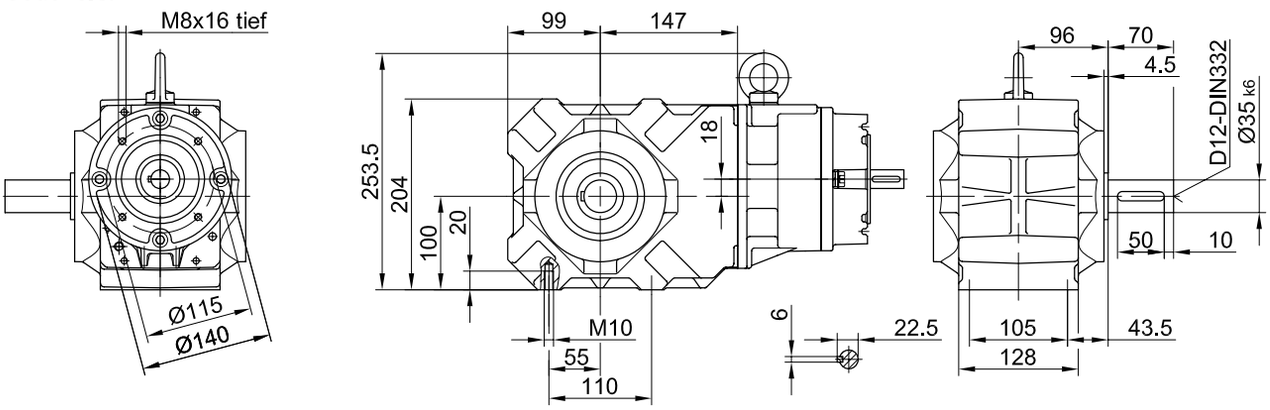

Fuss mit Durchgangslöchern unten

Code -1.U/

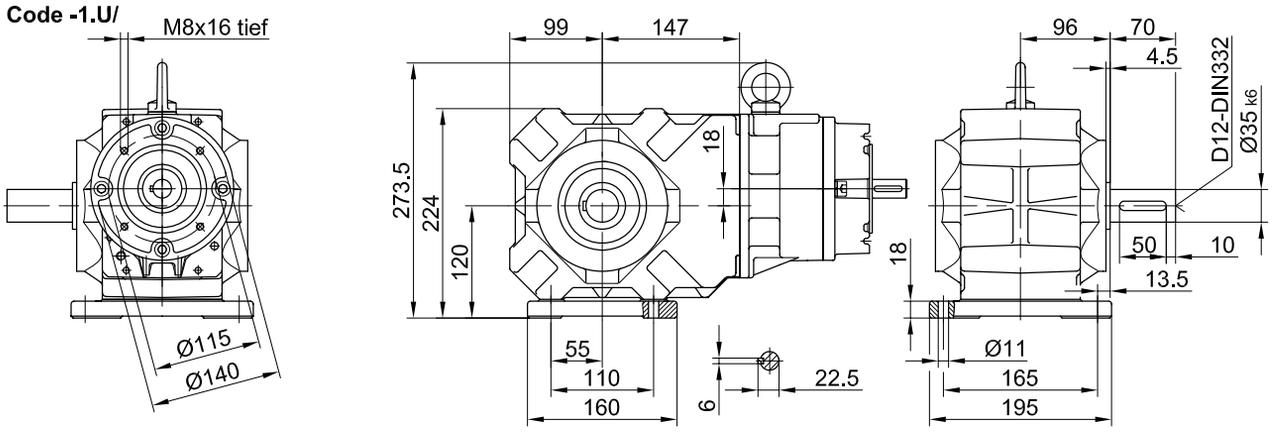

The actual gearbox design can vary from the geometry shown.

14

Input group

Dimensions of input group bevel geard motors SN

BK30-BK30Z-SN

Flansch mit Durchgangslöchern vorne

Code -3.V/
(Code -2.V/)

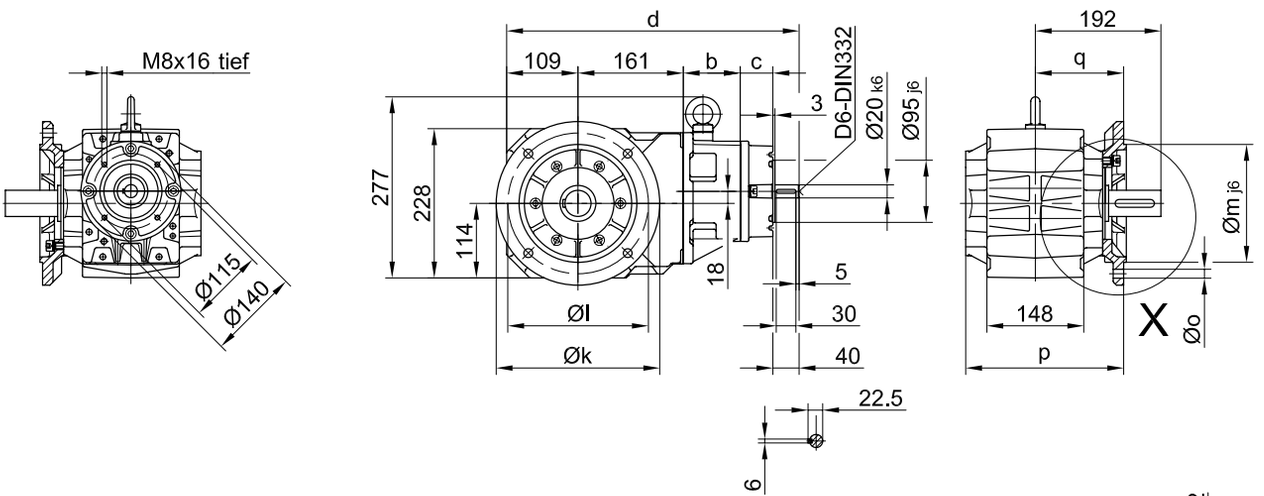

Code -.4/

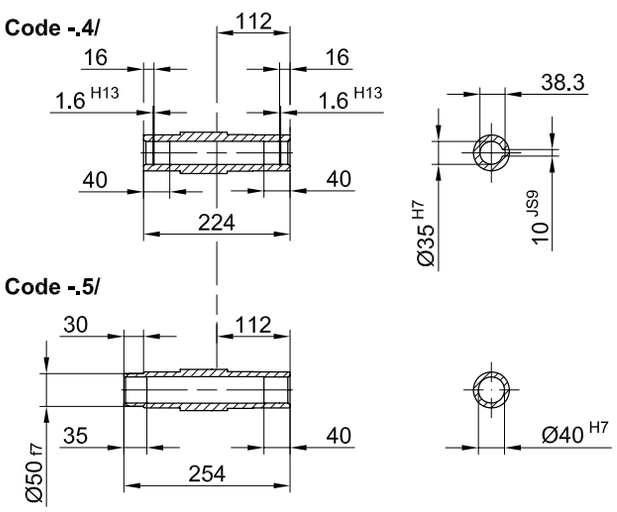

Code -.5/

Code -.1/

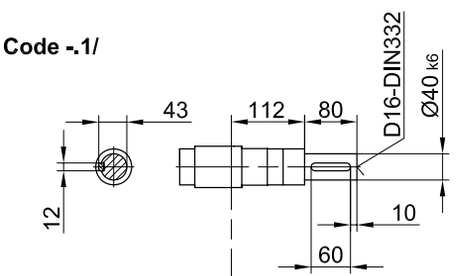

Code -.3/

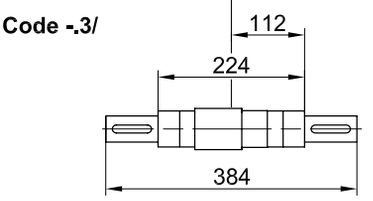

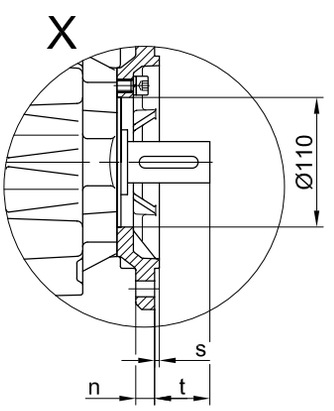

	b	c	d
BK30	87	50	447
BK30Z	141.5	39	490.5

Flanschmasse

BK30(Z)	k	l	m	n	o	p	q	s	t
Standard -3.V/	250	215	180	16	13.5	242	135	4	57
klein -2.V/	200	165	130	12	11	239	132	3.5	60

The actual gearbox design can vary from the geometry shown.

BK30-BK30Z-SN

Flansch mit Gewindelöchern vorne

Code -7.V/

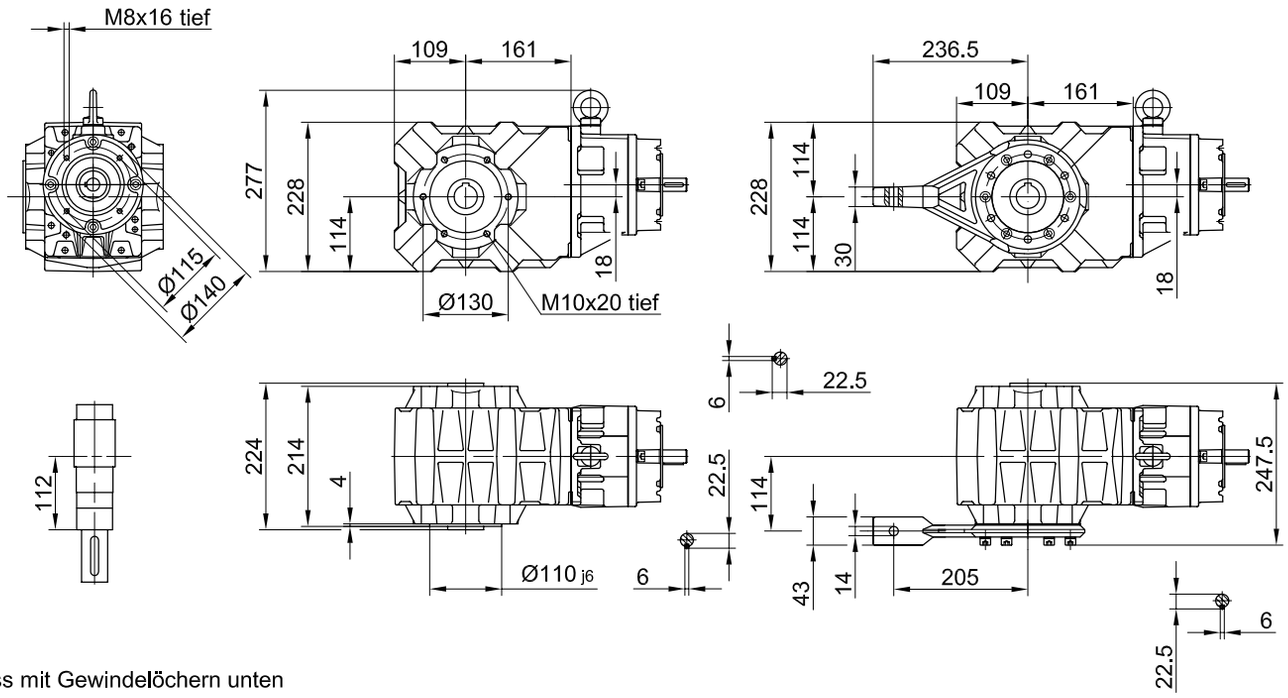

mit Drehmomentstütze vorne

Code -5.V/

Fuss mit Gewindelöchern unten

Code -6.U/

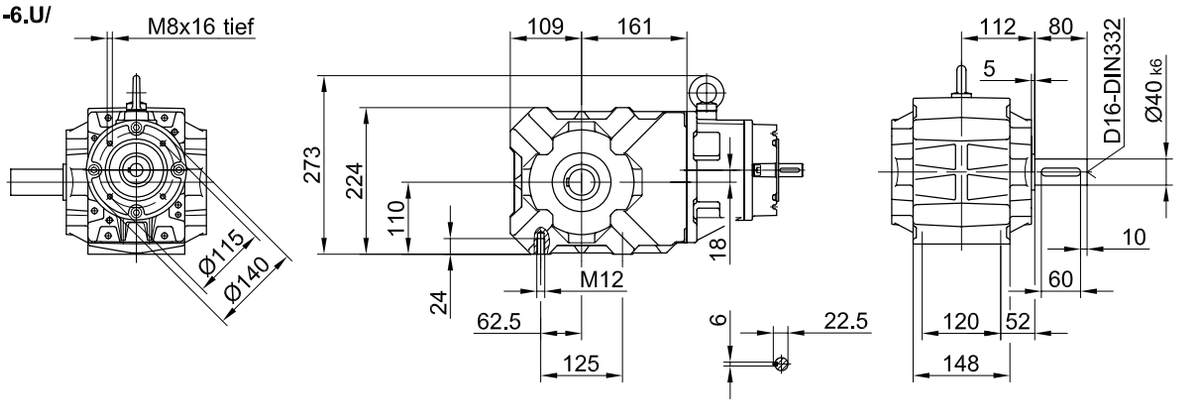

Fuss mit Durchgangslöchern unten

Code -1.U/

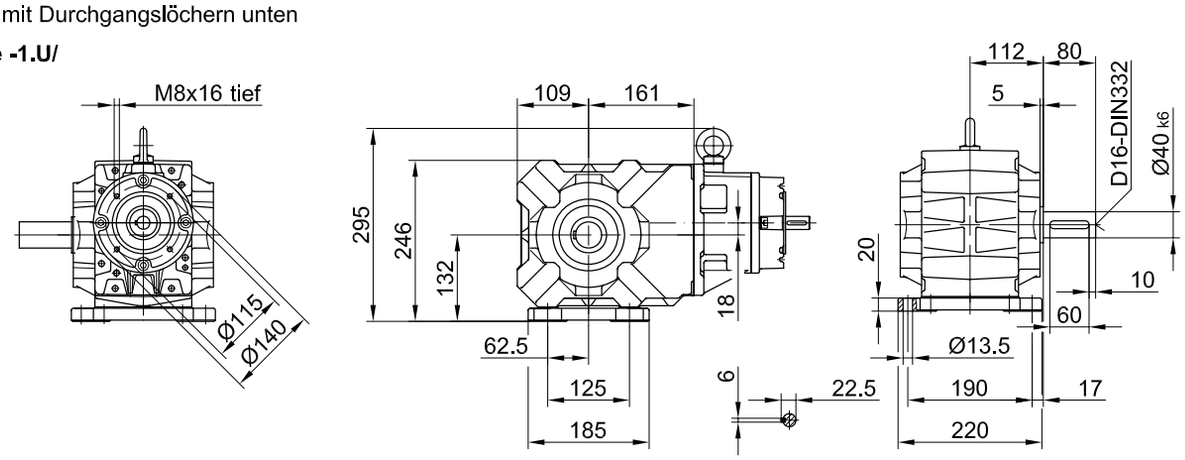

The actual gearbox design can vary from the geometry shown.

Input group

Dimensions of input group bevel geard motors SN

BK40-BK40Z-SN

Flansch mit Durchgangslöchern vorne

Code -3.V/
(Code -4.V/)

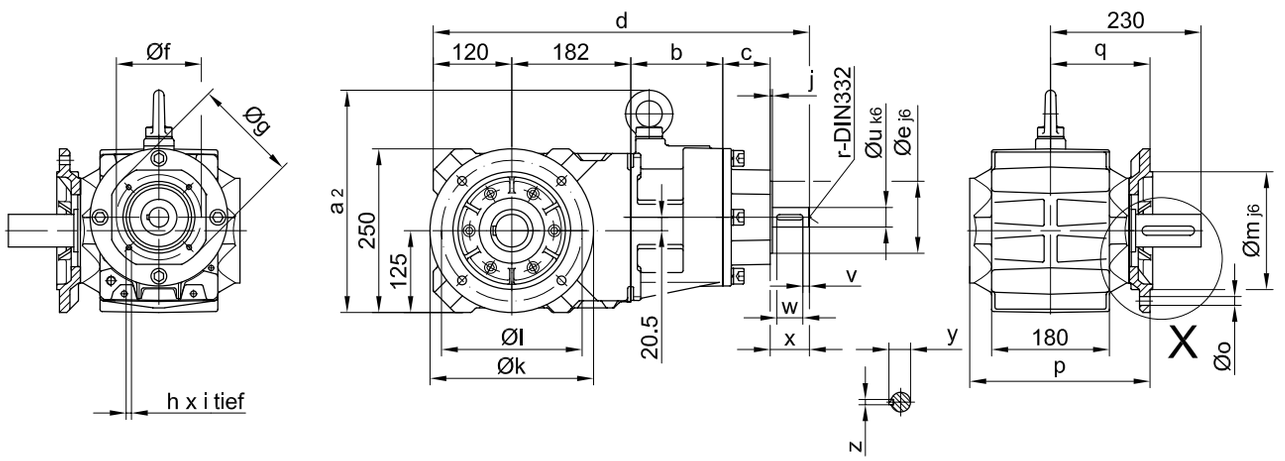

Code -.4/

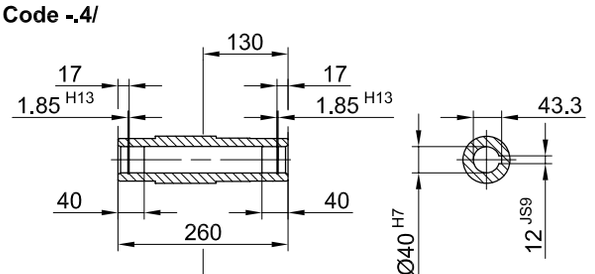

Code -.1/

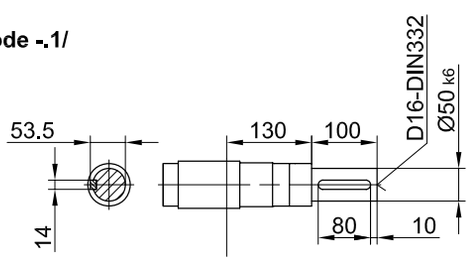

Code -.5/

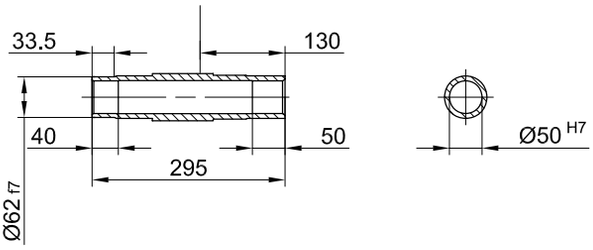

Code -.3/

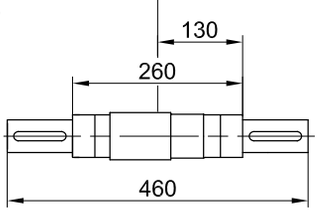

	a_1	a_2	a_3	b	c	d	e	f	g	h	i	j
BK40	334.5	339.5	356.5	140.5	72.5	575	110	130	160	M8	16	3.5
BK40Z	292	297	314	167.5	50	559.5	95	115	140	M8	16	3
	r	u	v	w	x	y	z					
BK40	D10	30	10	40	60	33	8					
BK40Z	D6	20	5	30	40	22.5	6					

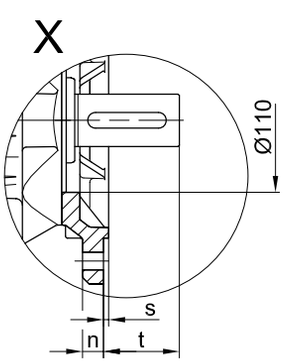

Flanschmasse

BK40(Z)	k	l	m	n	o	p	q	s	t
Standard -3.V/	250	215	180	16	13.5	276	152	4	78
gross -4.V/	300	265	230	20	13.5	282	158	4	72

The actual gearbox design can vary from the geometry shown.

BK40-BK40Z-SN

Flansch mit Gewindelöchern vorne

Code -7.V/

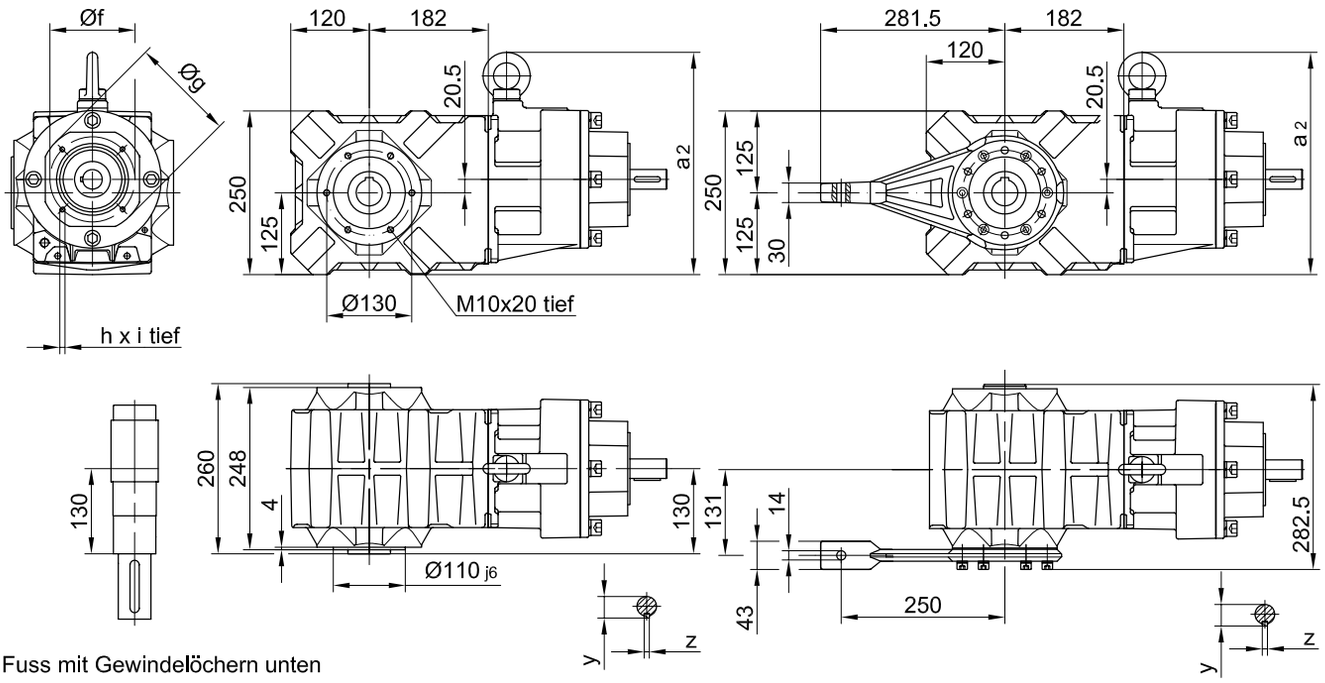

mit Drehmomentstütze vorne

Code -5.V/

Fuss mit Gewindelöchern unten

Code -6.U/

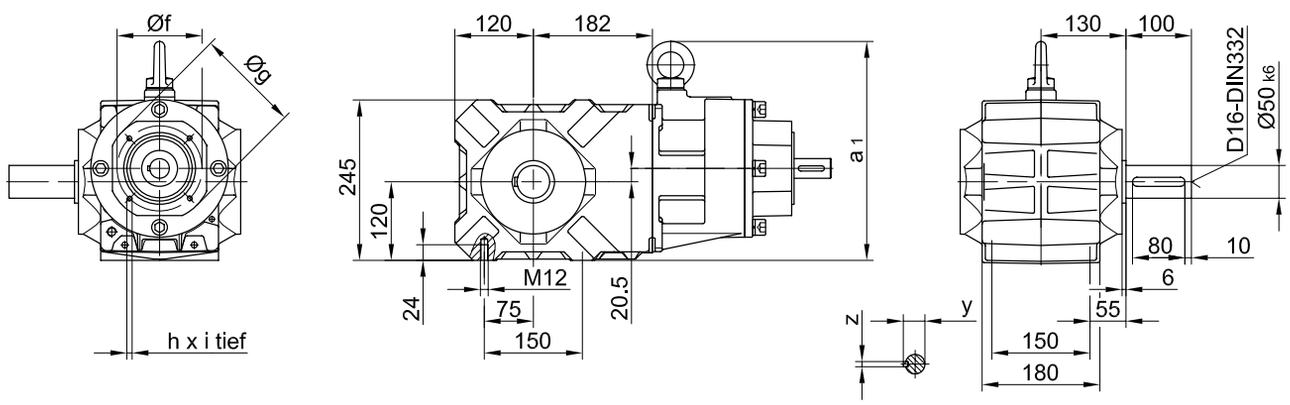

Fuss mit Durchgangslöchern unten

Code -1.U/

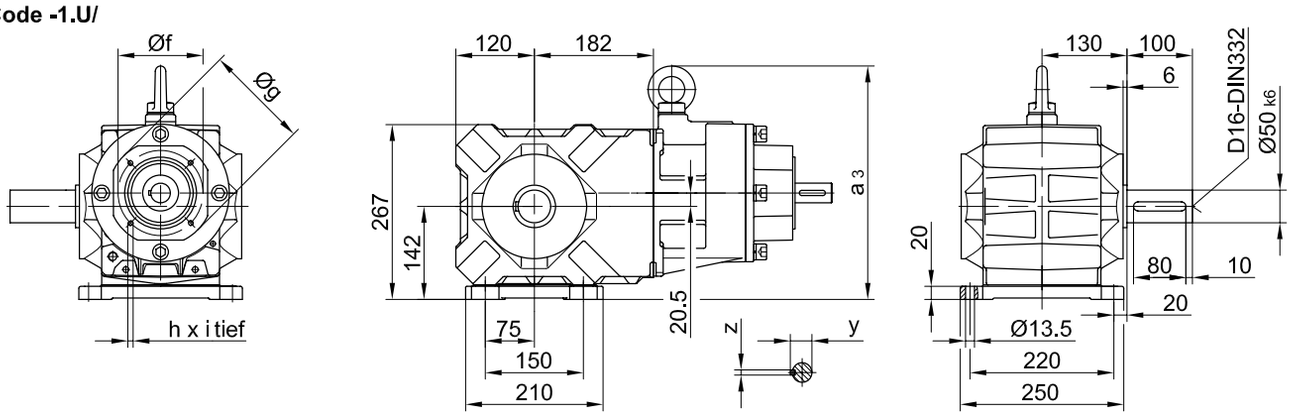

The actual gearbox design can vary from the geometry shown.

14

Input group

Dimensions of input group bevel geard motors SN

BK50-BK50Z-SN

Flansch mit Durchgangslöchern vorne

Code -3.V/
(Code -2.V/)

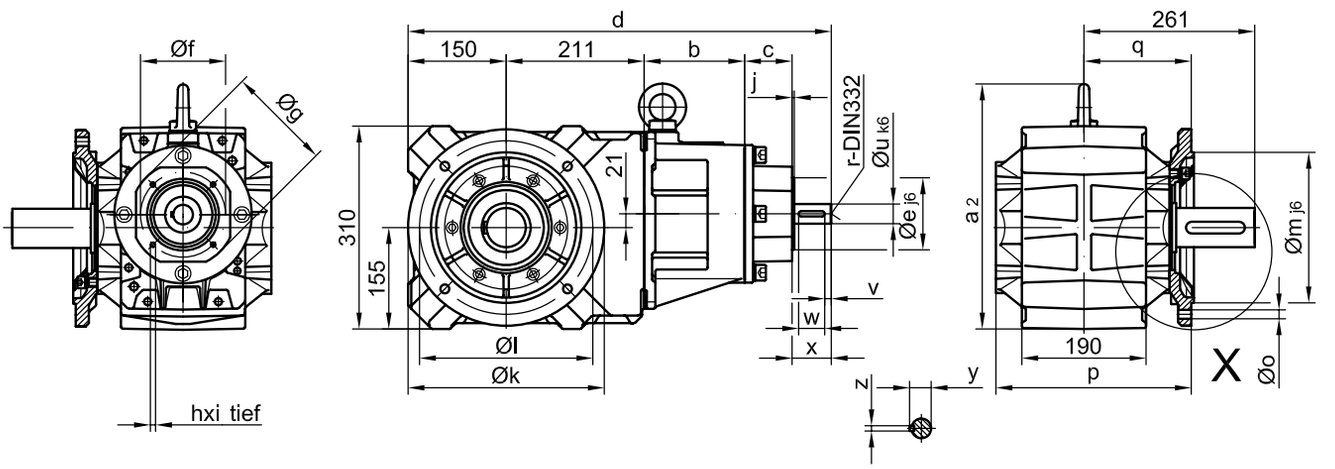

Code -.4/

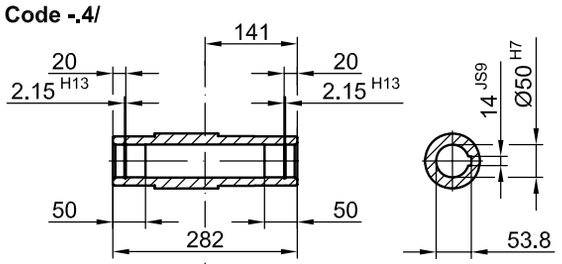

Code -.1/

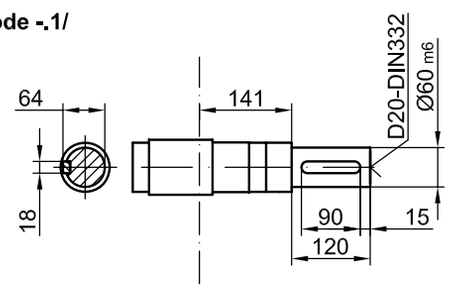

Code -.5/

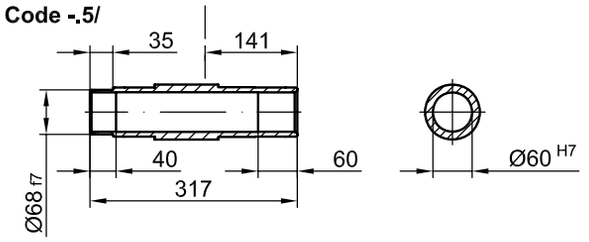

Code -.3/

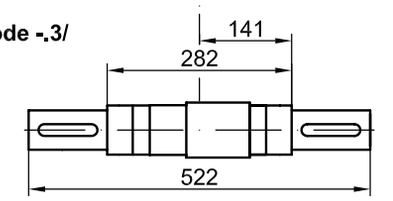

	a_1	a_2	a_3	b	c	d	e	f	g	h	i	j
BK50	360	365	385	153.5	72.5	647	110	130	160	M8	16	3.5
BK50Z	370	375	395	184	50	635	95	115	140	M8	16	3
	r	u	v	w	x	y	z					
BK50	D10	30	10	40	60	33	8					
BK50Z	D6	20	5	30	40	22.5	6					

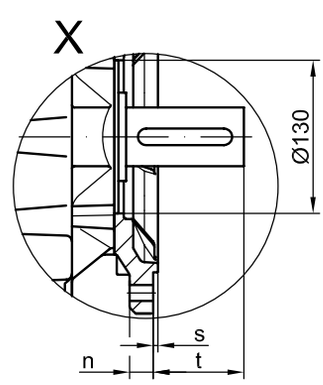

Flanschmasse

BK50(Z)	k	l	m	n	o	p	q	s	t
Standard -3.V/	300	265	230	20	13.5	298.5	164	4	97
klein -2.V/	250	215	180	16	13.5	296	161	4	100

The actual gearbox design can vary from the geometry shown.

BK50-BK50Z-SN

Flansch mit Gewindelöchern vorne

Code -7.V/

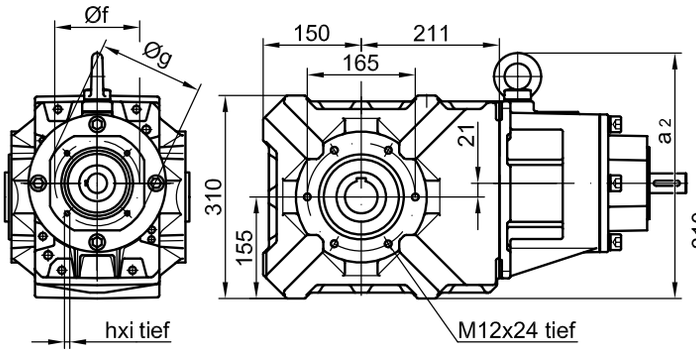

mit Drehmomentstütze vorne

Code -5.V/

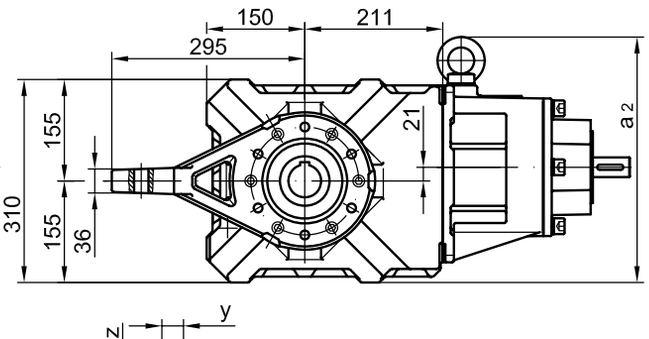

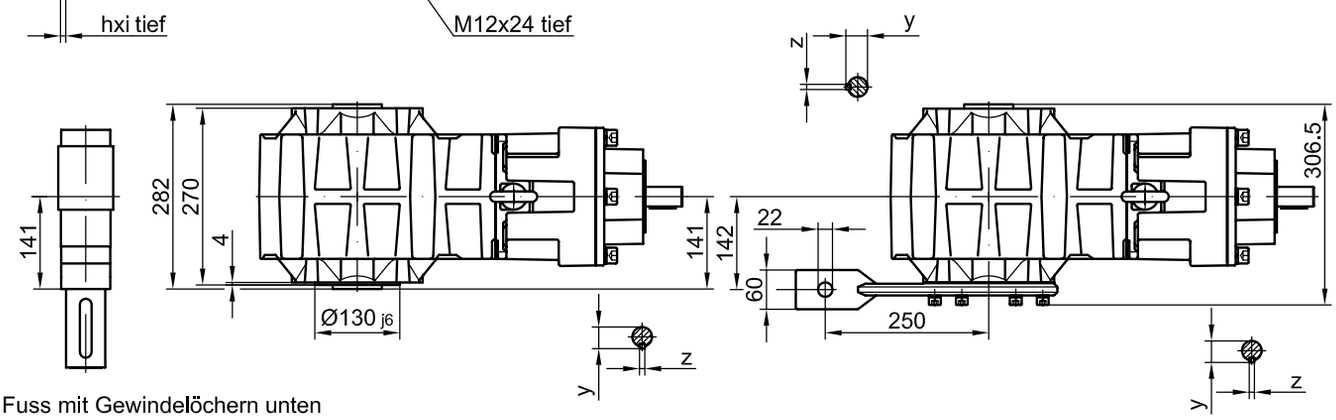

Fuss mit Gewindelöchern unten

Code -6.U/

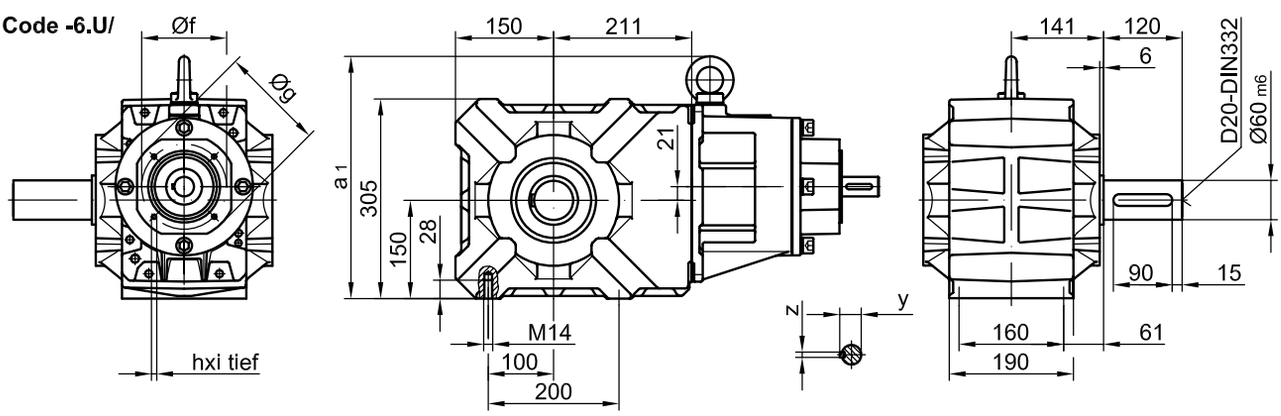

Fuss mit Durchgangslöchern unten

Code -1.U/

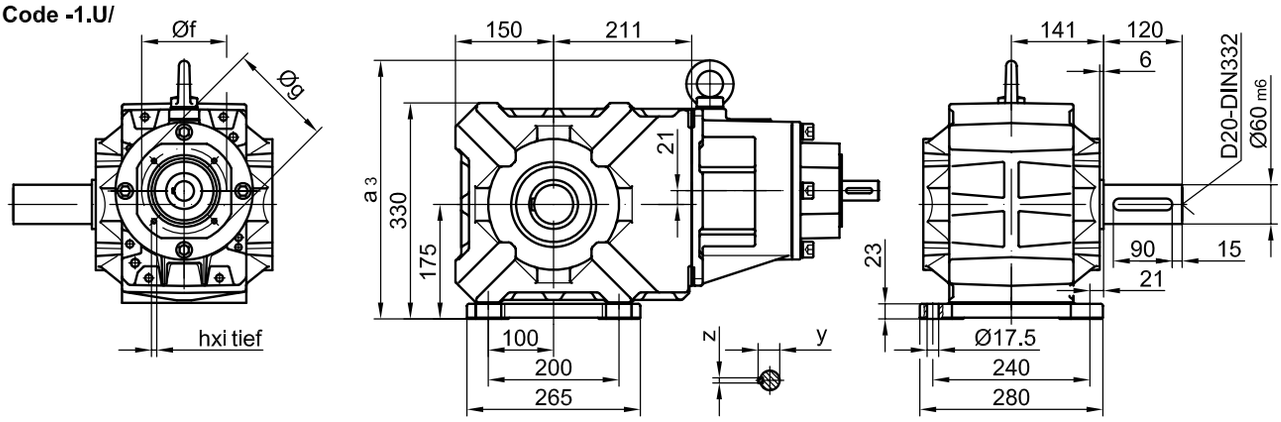

The actual gearbox design can vary from the geometry shown.

14

Input group

Dimensions of input group bevel geard motors SN

BK60-BK60Z-SN

Flansch mit Durchgangslöchern vorne

Code -3.V/
(Code -2.V/)

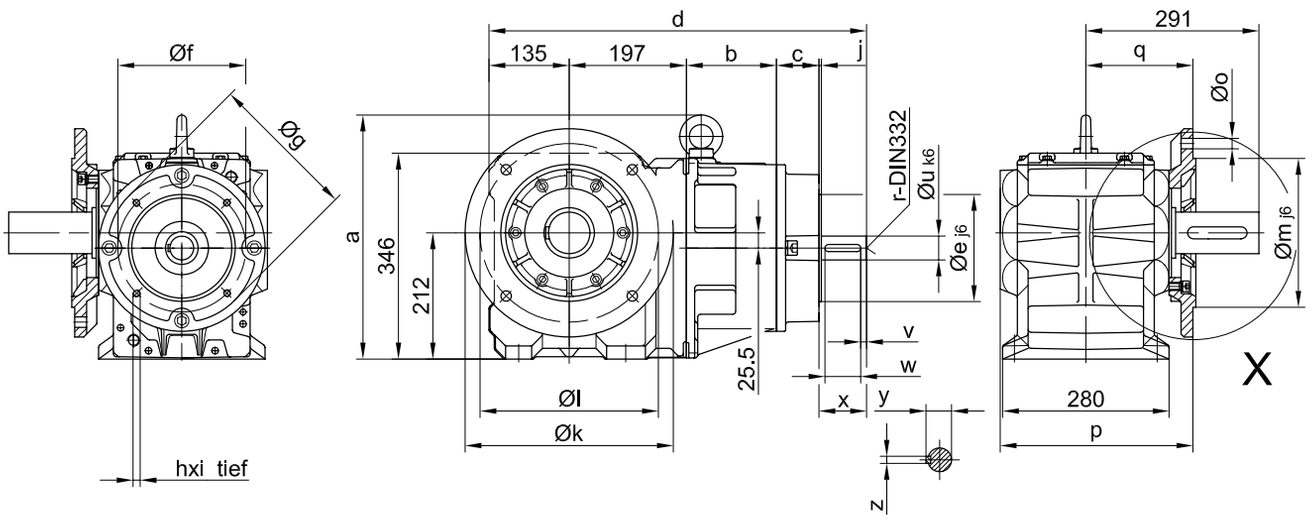

Code -.4/

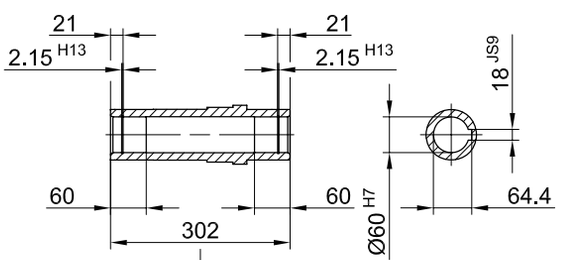

Code -.1/

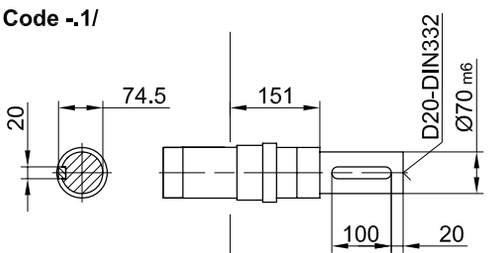

Code -.5/

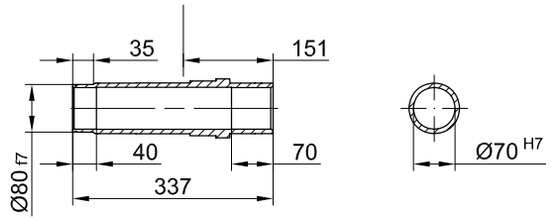

Code -.3/

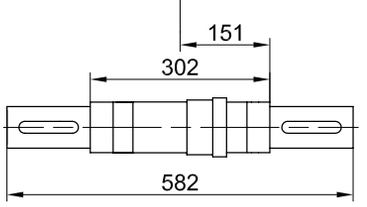

	a	b	c	d	e	f	g	h	i	j
BK60	410	151.5	71.5	635	180	215	250	M12	24	4
BK60Z	410	261.5	72.5	746	110	130	160	M8	16	3.5
	r	u	v	w	x	y	z			
BK60	D16	40	10	60	80	43	12			
BK60Z	D10	30	10	40	60	33	8			

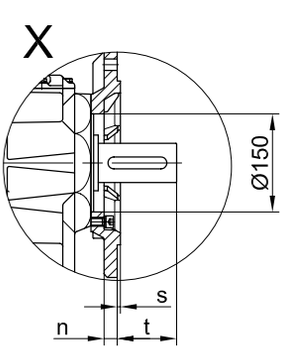

Flanschmasse

BK60(Z)	k	l	m	n	o	p	q	s	t
Standard -3.V/	350	300	250 h6	20	17.5	324	180	5	111
klein -2.V/	300	265	230 j6	20	13.5	332	188	4	103

The actual gearbox design can vary from the geometry shown.

BK60-BK60Z-SN

Flansch mit Gewindelöchern vorne

Code -7.V/

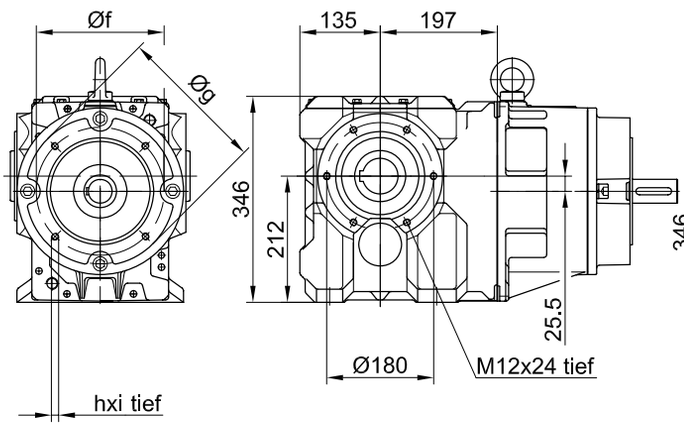

mit Drehmomentstütze vorne

Code -5.V/

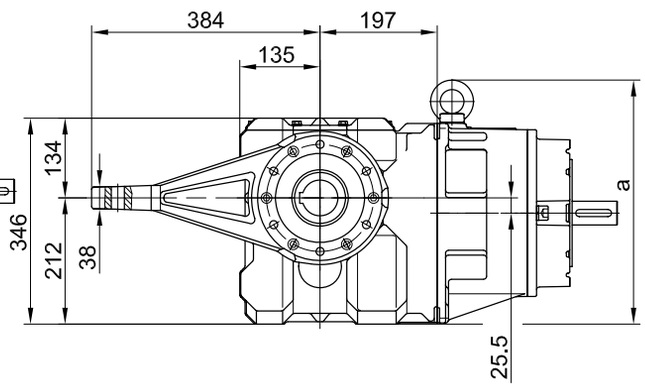

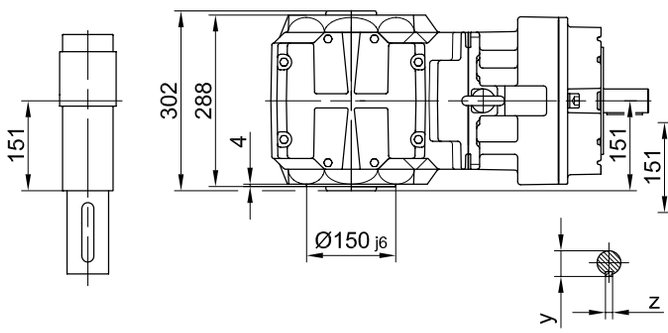

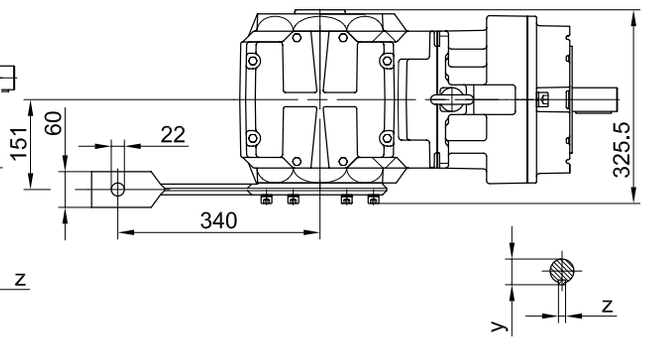

Fuss mit Durchgangslöchern unten

Code -1.U/

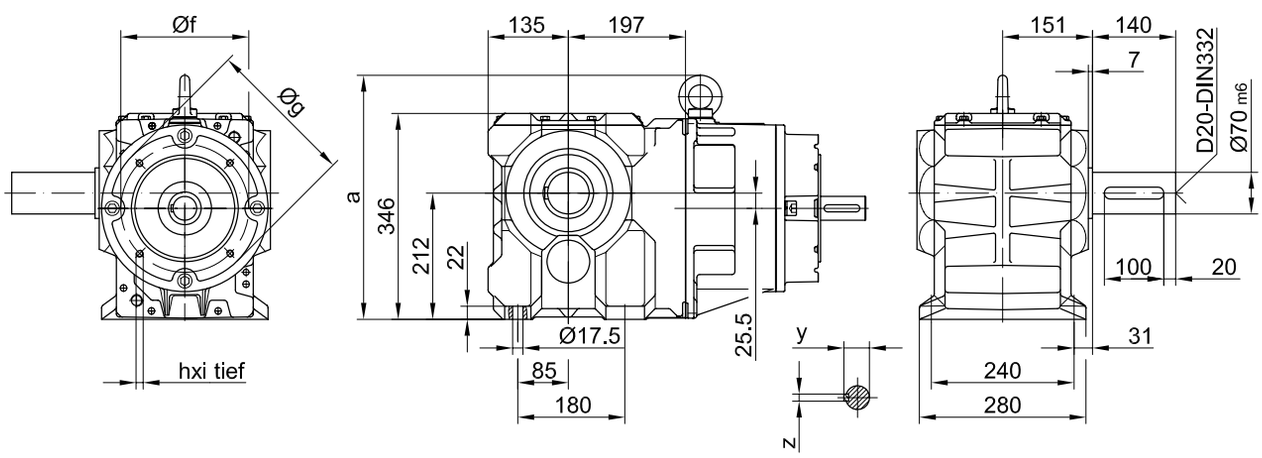

The actual gearbox design can vary from the geometry shown.

Input group

Dimensions of input group bevel geard motors SN

BK70-BK70Z-SN

Flansch mit Durchgangslöchern vorne

Code -3.V/
(Code -2.V/)
(Code -4.V/)

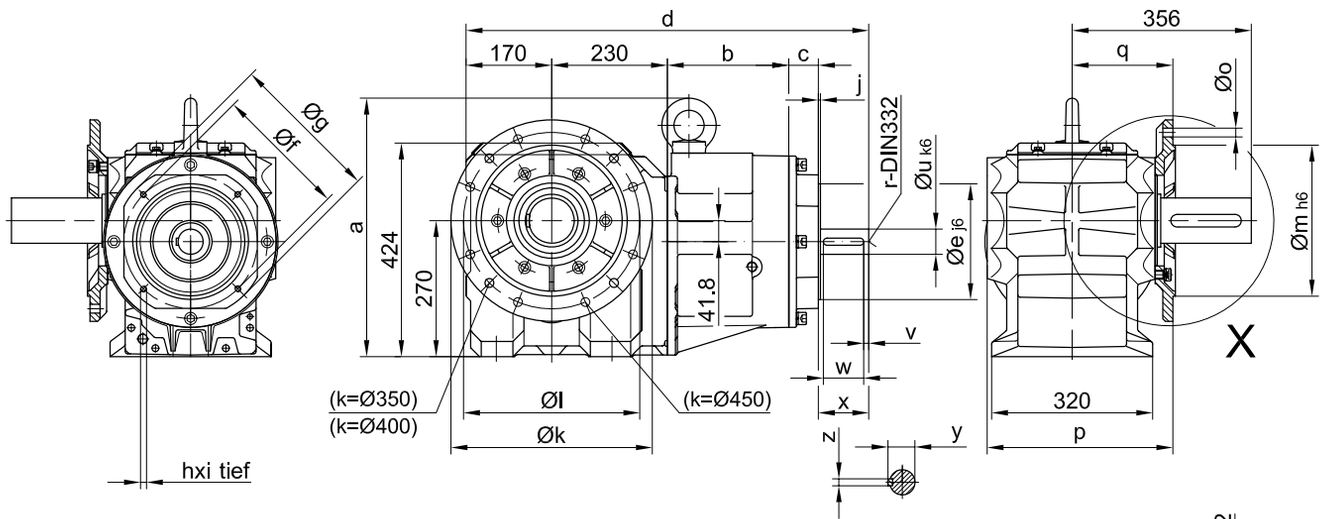

Code -.4/

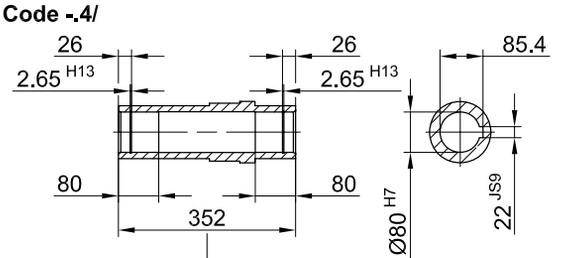

Code -.1/

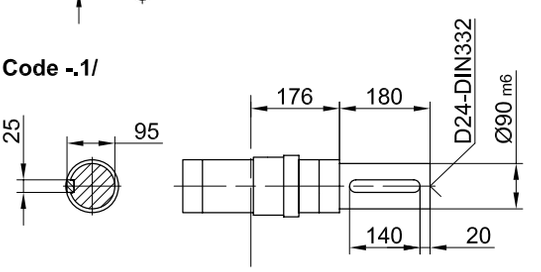

Code -.5/

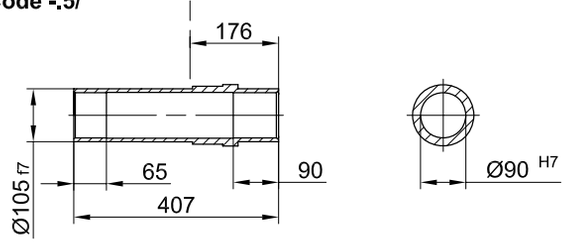

Code -.3/

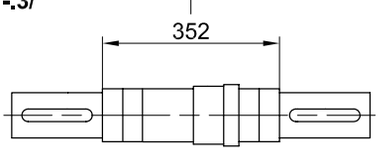

	a	b	c	d	e	f	g	h	i	j
BK70	513.2	241	59	800	230	265	300	M12	24	4
BK70Z	451.2	282.5	72.5	815	110	130	160	M8	16	3.5
	r	u	v	w	x	y	z			
BK70	D16	50	10	80	100	53.5	14			
BK70Z	D10	30	10	40	60	33	8			

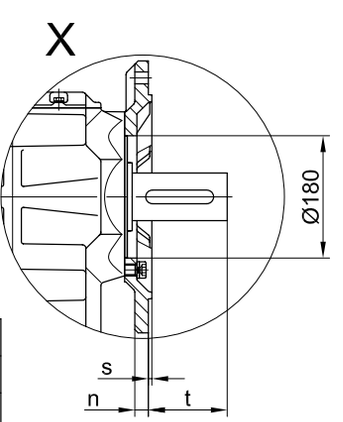

Flanschmasse

BK70(Z)	k	l	m	n	o	p	q	s	t
Standard -3.V/	400	350	300	20	4 x Ø17.5	369	200	5	156
klein -2.V/	350	300	250	20	4 x Ø17.5	369	200	5	156
gross -4.V/	450	400	350	22	8 x Ø17.5	379	210	5	146

The actual gearbox design can vary from the geometry shown.

BK70-BK70Z-SN

Flansch mit Gewindelöchern vorne

Code -7.V/

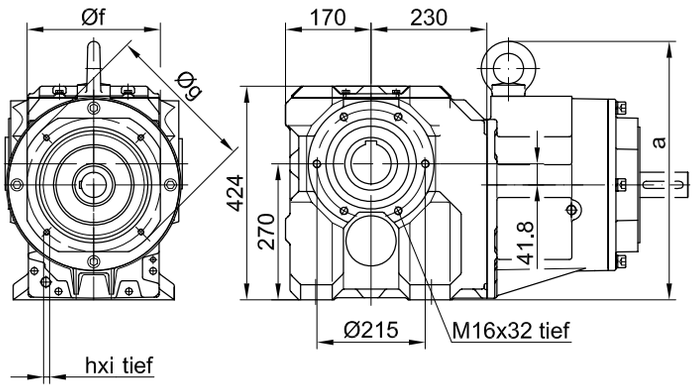

mit Drehmomentstütze vorne

Code -5.V/

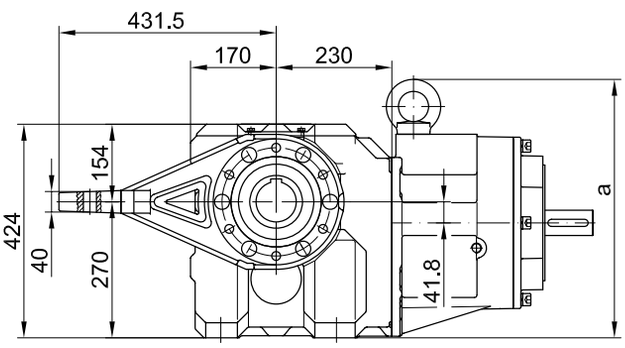

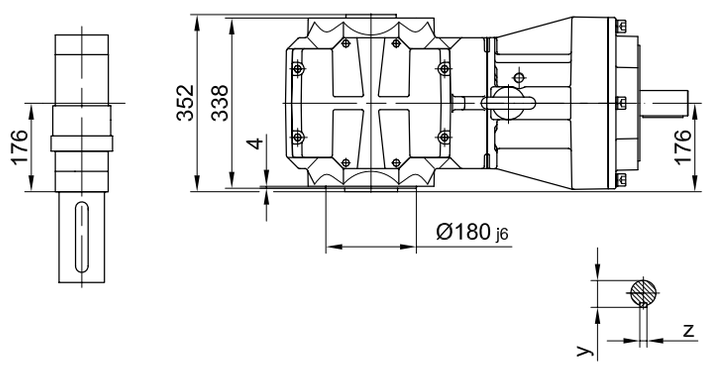

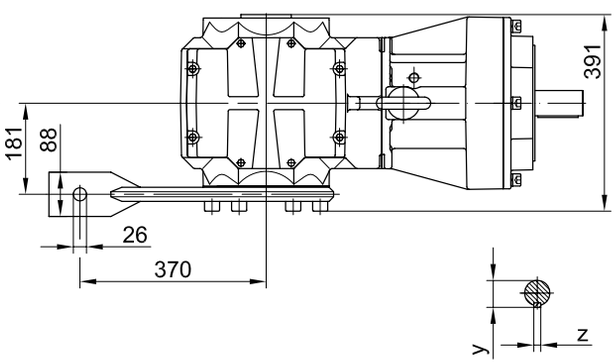

Fuss mit Durchgangslöchern unten

Code -1.U/

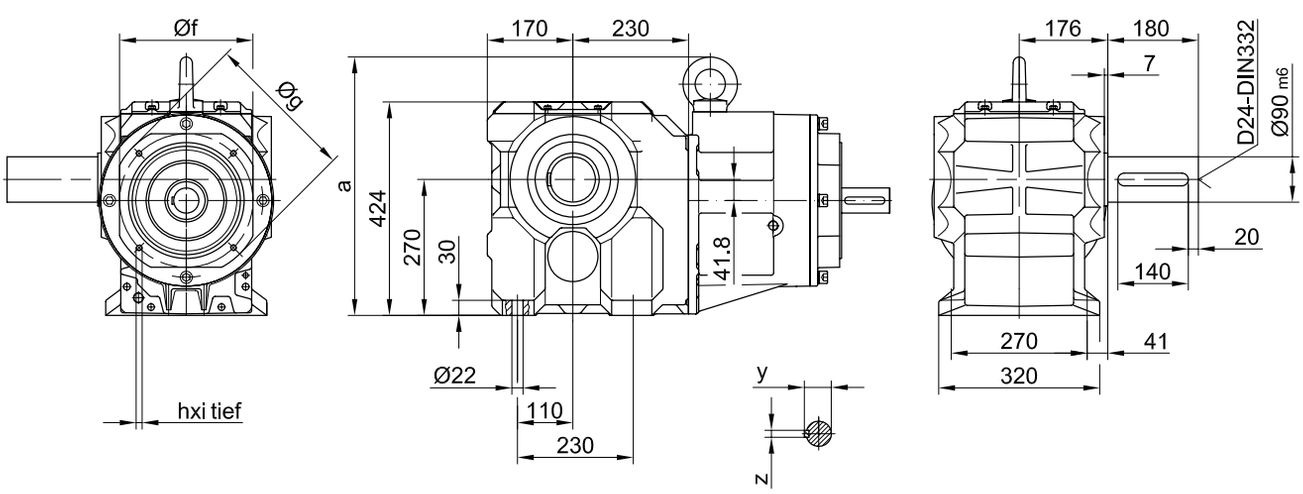

The actual gearbox design can vary from the geometry shown.

Input group

Dimensions of input group bevel geard motors SN

BK80-BK80Z-SN

Flansch mit Durchgangslöchern vorne

Code -3.V/
(Code -4.V/)

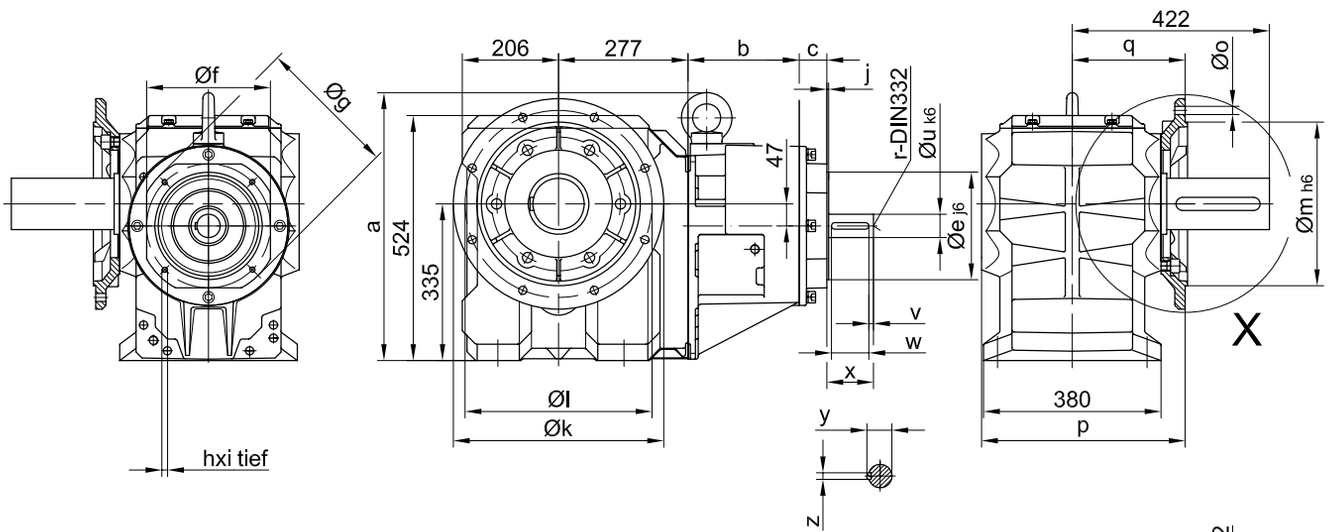

Code -.4/

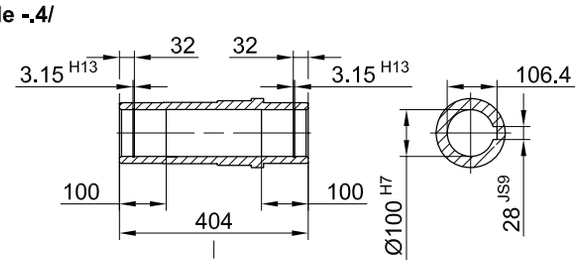

Code -.1/

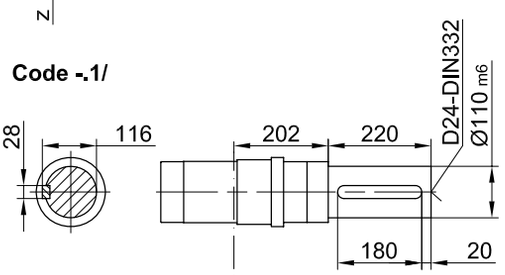

Code -.5/

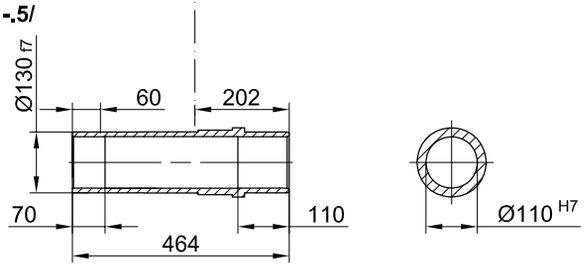

Code -.3/

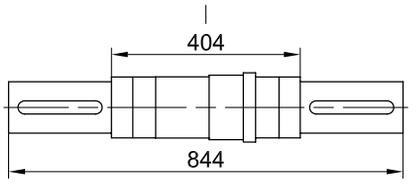

	a	b	c	d	e	f	g	h	i	j
BK80	573	238	59	880	230	265	300	M12	24	4
BK80Z	551	318.5	71.5	953	180	215	250	M12	24	4
	r	u	v	w	x	y	z			
BK80	D16	50	10	80	100	53.5	14			
BK80Z	D16	40	10	60	80	43	12			

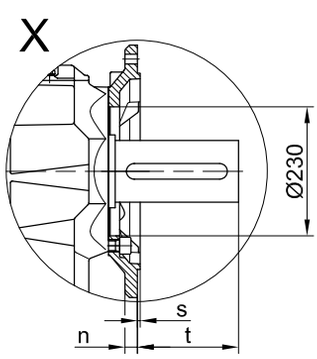

Flanschmasse

BK80(Z)	k	l	m	n	o	p	q	s	t
Standard -3.V/	450	400	350	22	17,5	439	245	5	177
gross -4.V/	550	500	450	22	17,5	444	250	5	172

The actual gearbox design can vary from the geometry shown.

BK80-BK80Z-SN

Flansch mit Gewindelöchern vorne

Code -7.V/

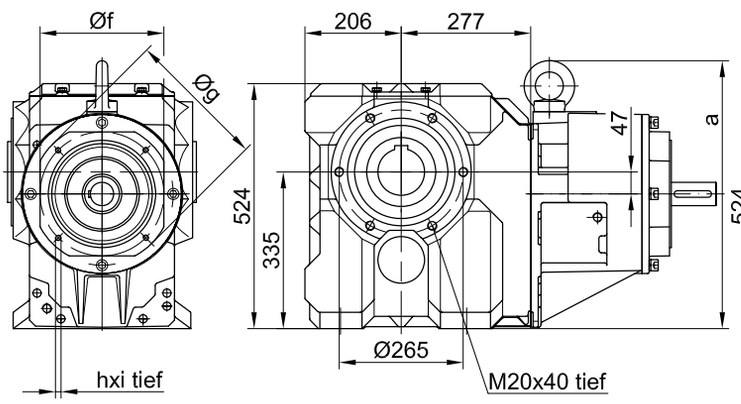

mit Drehmomentstütze vorne

Code -5.V/

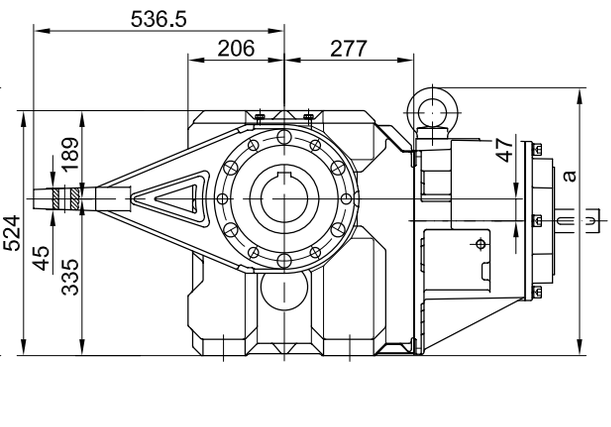

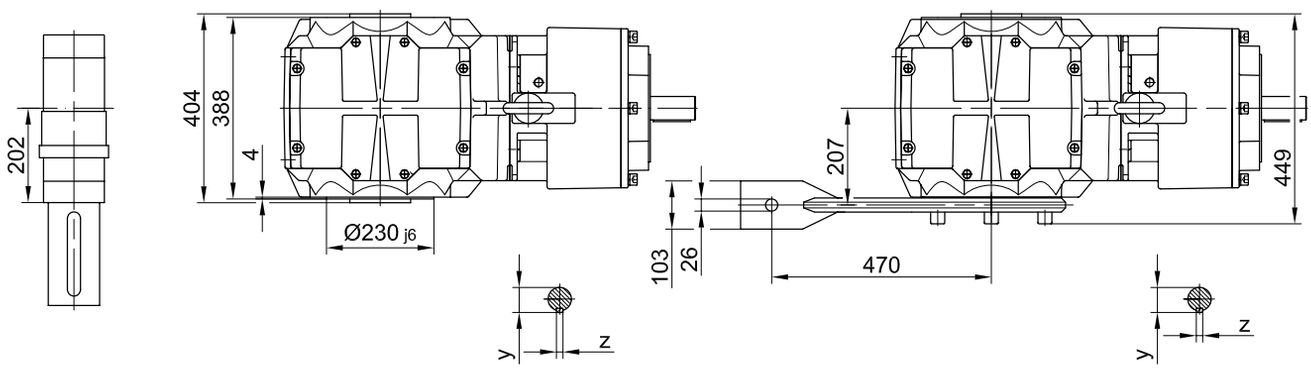

Fuss mit Durchgangslöchern unten

Code -1.U/

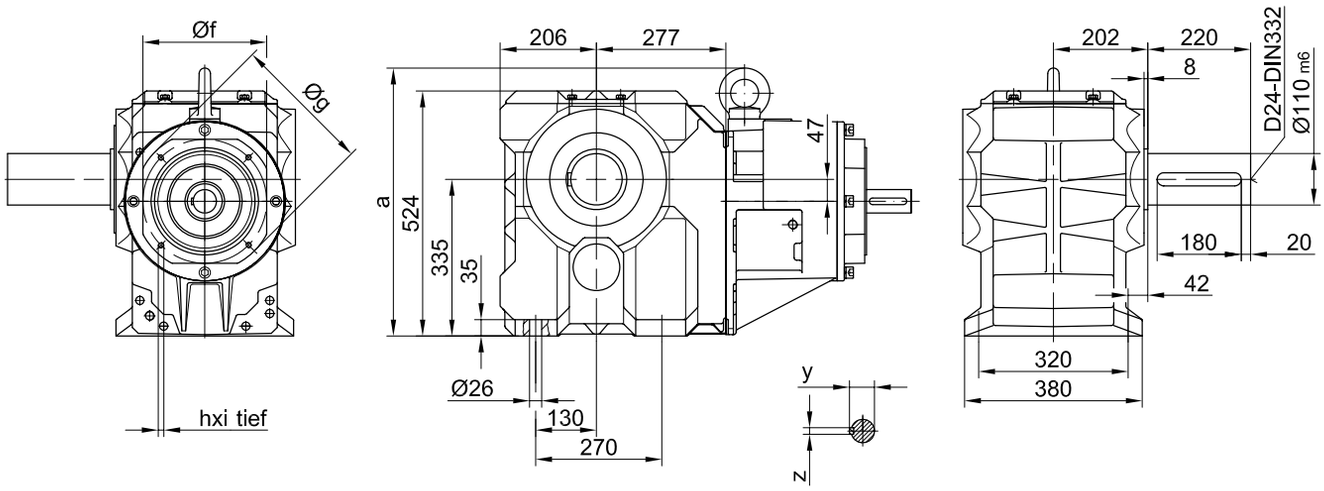

The actual gearbox design can vary from the geometry shown.

Input group

Dimensions of input group bevel geard motors SN

BK90-BK90Z-SN

Flansch mit Durchgangslöchern vorne

Code -3.V/
(Code -4.V/)

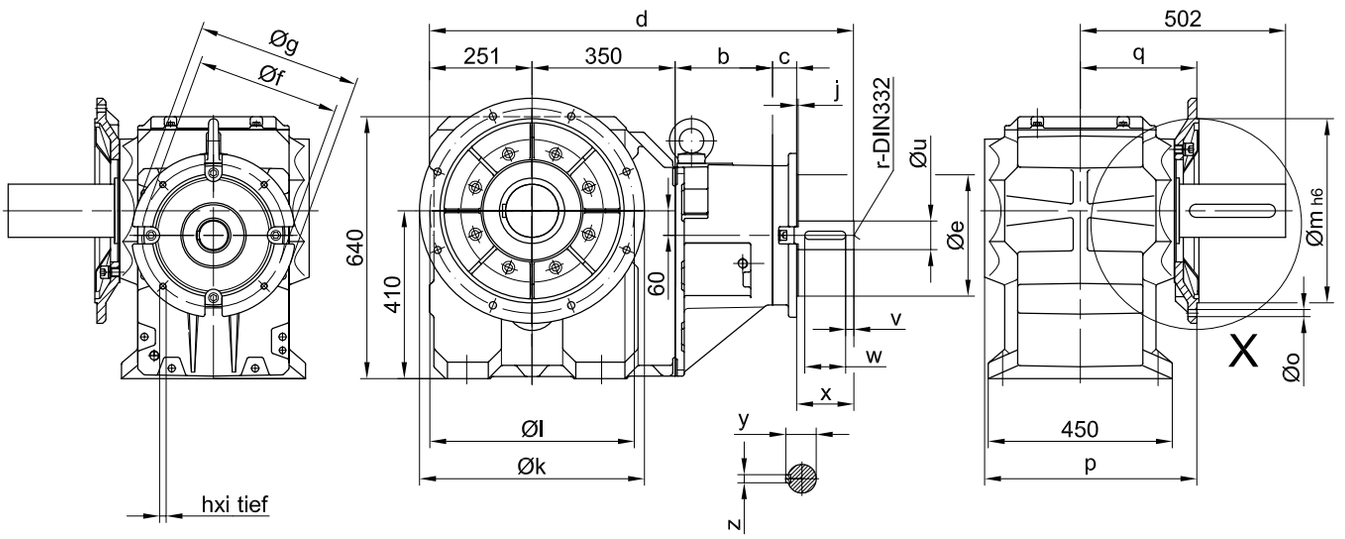

Code -.4/

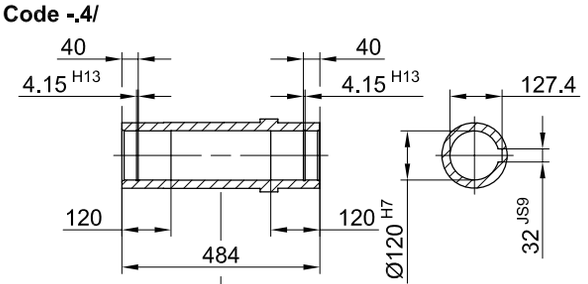

Code -.1/

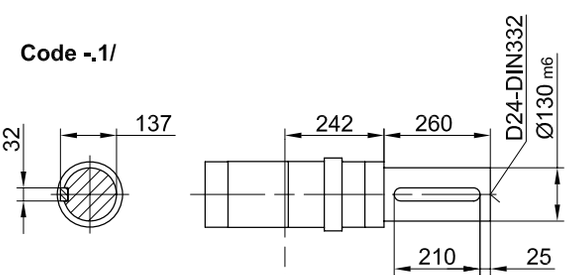

Code -.5/

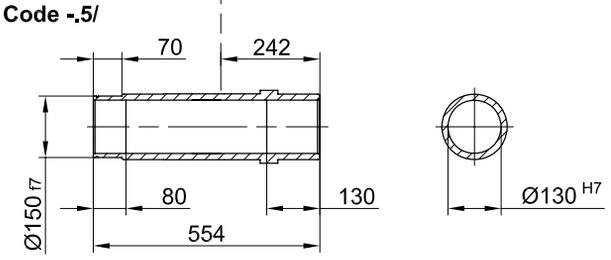

Code -.3/

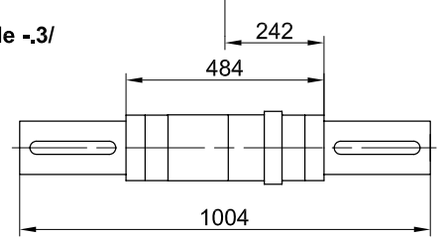

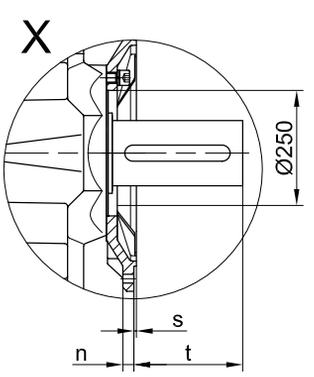

	a	b	c	d	e	f	g	h	i	j
BK90	635	238	59	1038	300 h6	350	400	M16	32	4
BK90Z	629	424.5	59	1184.5	230 j6	265	300	M12	24	4
	r	u	v	w	x	y	z			
BK90	D20	70 m6	20	100	140	74.5	20			
BK90Z	D16	50 k6	10	80	100	53.5	14			

Flanschmasse

BK90(Z)	k	l	m	n	o	p	q	s	t
Standard -3.V/	550	500	450	22	17.5	519	285	5	217
gross -4.V/	660	600	550	25	22	513	279	6	223

The actual gearbox design can vary from the geometry shown.

BK90-BK90Z-SN

Flansch mit Gewindelöchern vorne

Code -7.V/

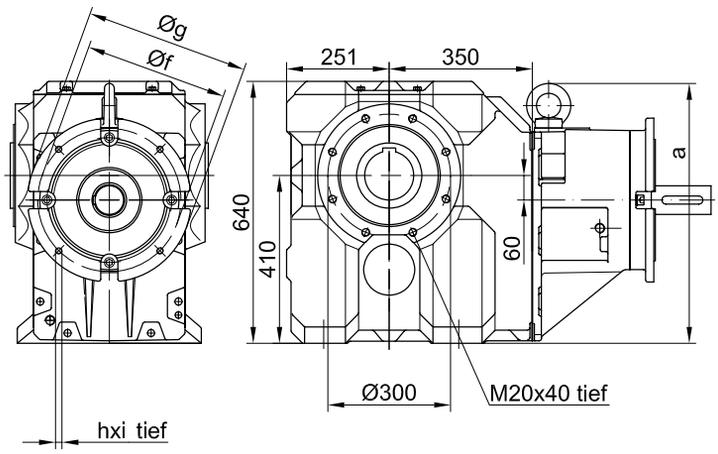

mit Drehmomentstütze vorne

Code -5.V/

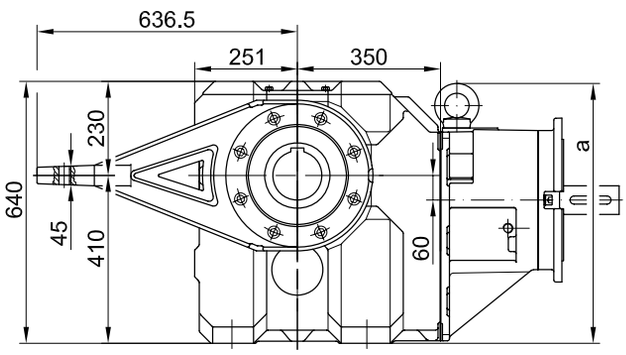

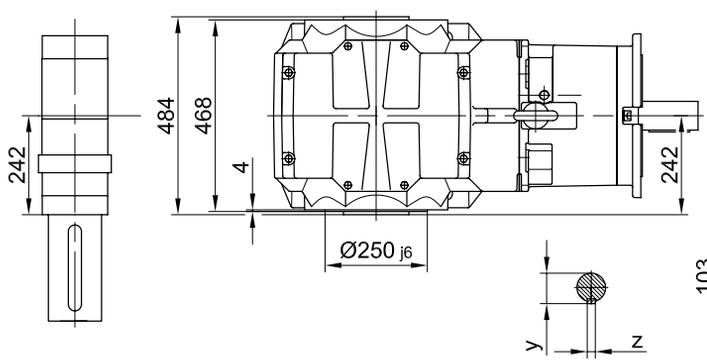

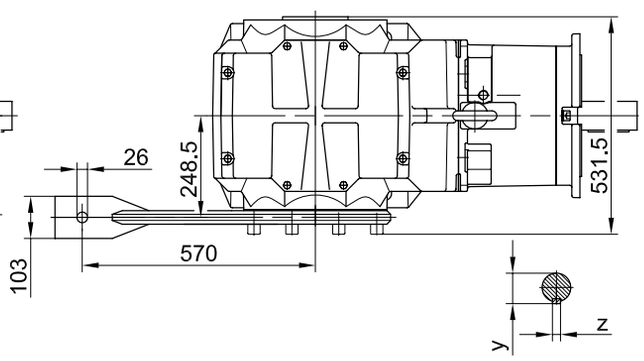

Fuss mit Durchgangslöchern unten

Code -1.U/

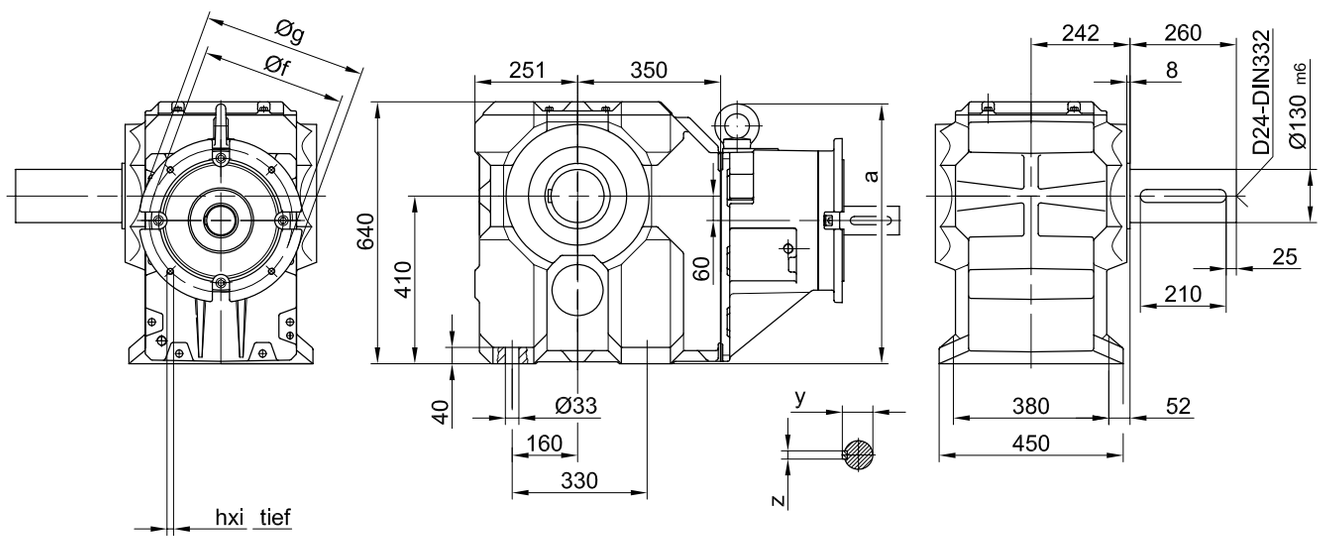

The actual gearbox design can vary from the geometry shown.

Input group

Dimensions of input group worm geard motors SN

BS10-BS10Z-SN

Flansch mit Durchgangslöchern vorne

Code -3.V/
(Code -2.V/)

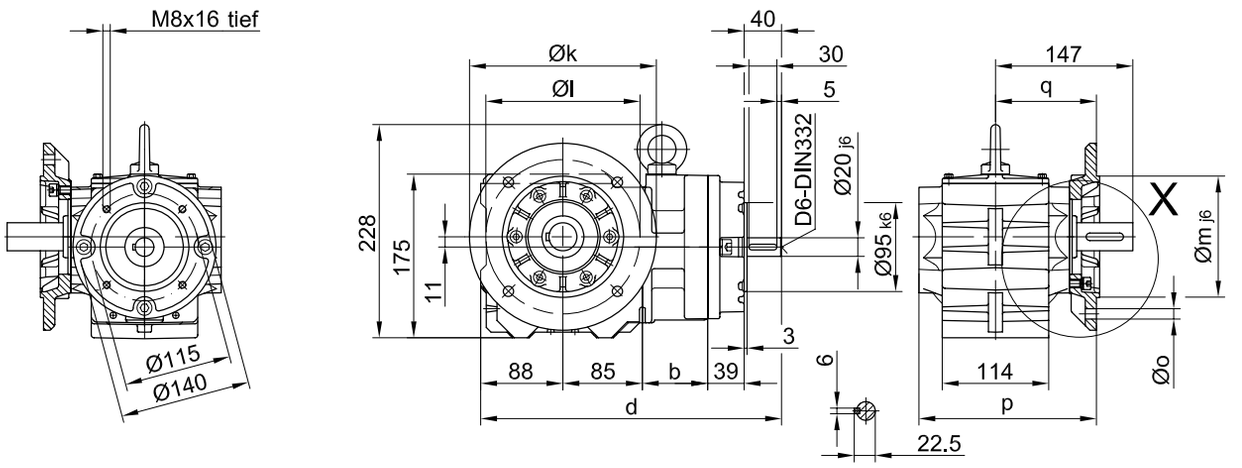

Code -.4/

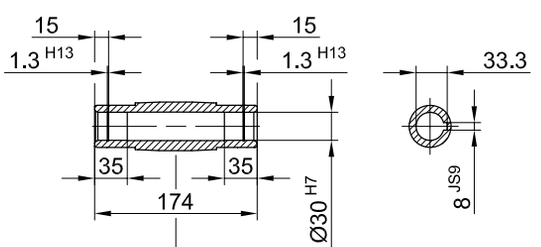

Code -.1/

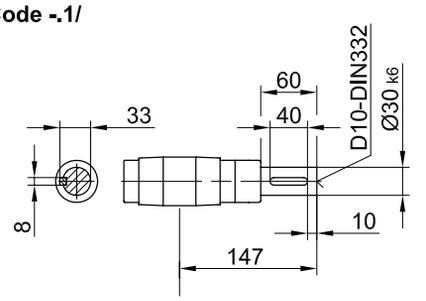

Code -.5/

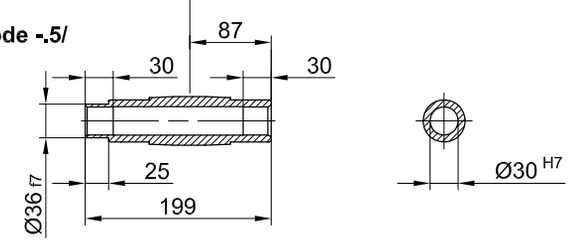

Code -.3/

Standard

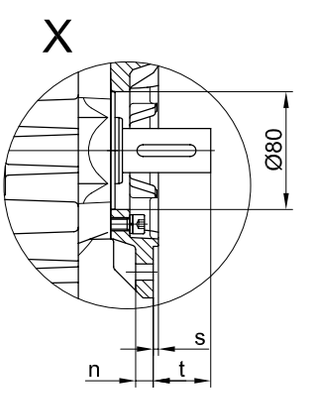

	b	d
BS10	70	322
BS10Z	136	388

Flanschmasse

BS10(Z)	k	l	m	n	o	p	q	s	t
Standard -3.V/	200	165	130	12	11	190	108	3.5	39
klein -2.V/	160	130	110	10	9	183	101	3.5	46

The actual gearbox design can vary from the geometry shown.

BS10-BS10Z-SN

Flansch mit Gewindelöchern vorne

Code -7.V/

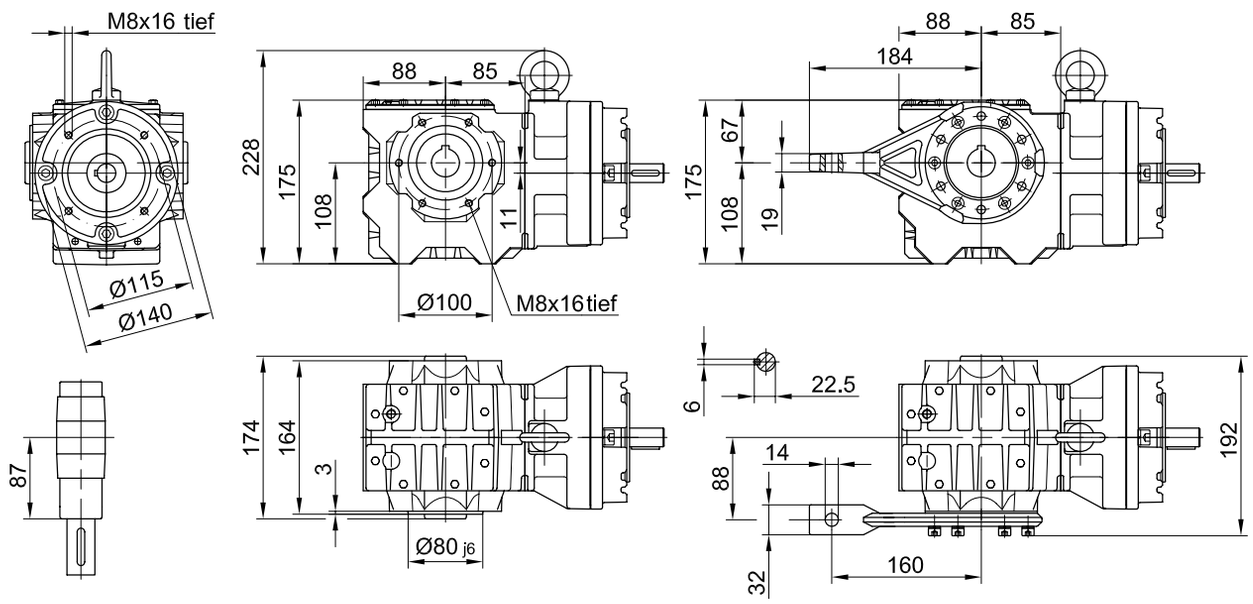

mit Drehmomentstütze vorne

Code -5.V/

Fuss mit Gewindelöchern unten

Code -6.U/

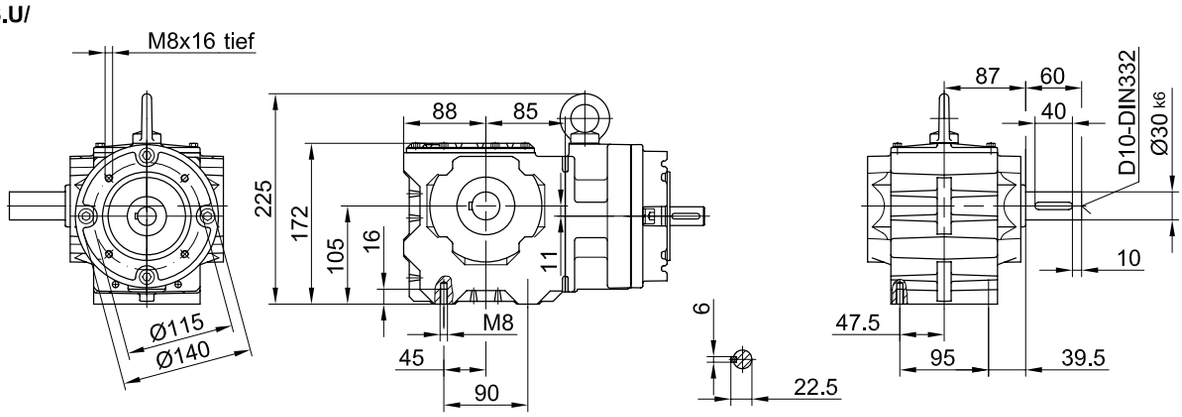

Fuss mit Durchgangslöchern unten

Code -1.U/

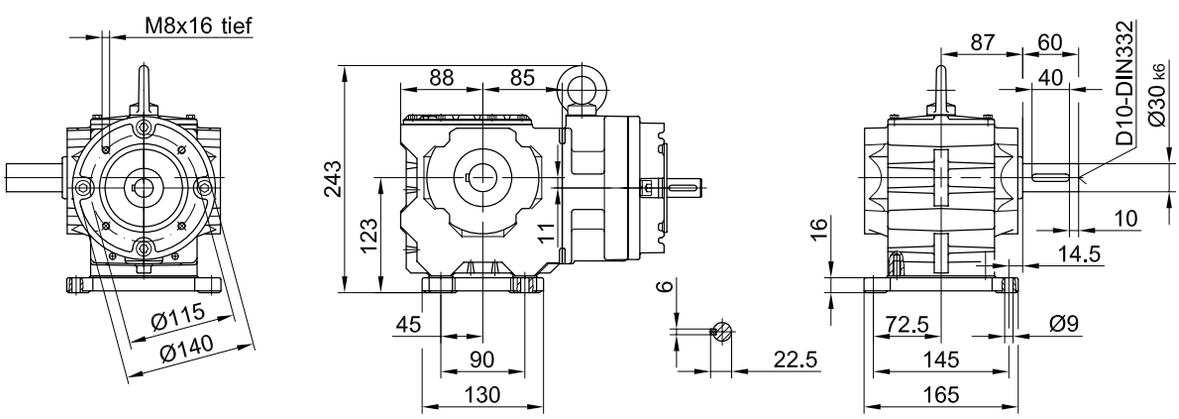

The actual gearbox design can vary from the geometry shown.

Input group

Dimensions of input group worm geard motors SN

BS20-BS20Z-SN

Flansch mit Durchgangslöchern vorne

Code -3.V/
(Code -2.V/)
(Code -4.V/)

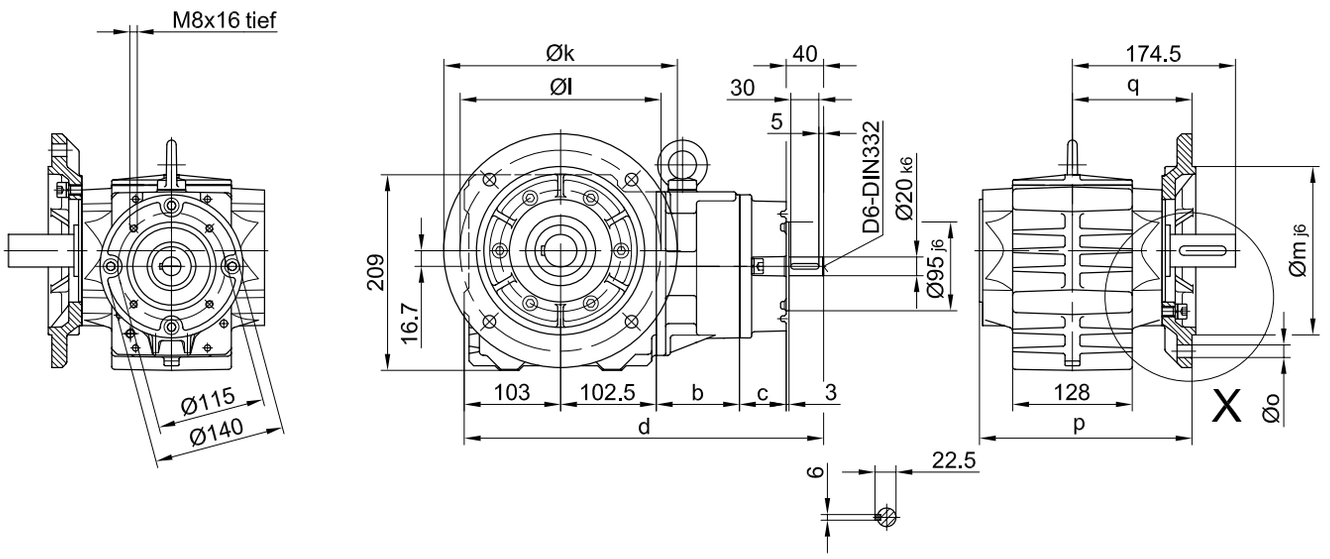

Code -.4/

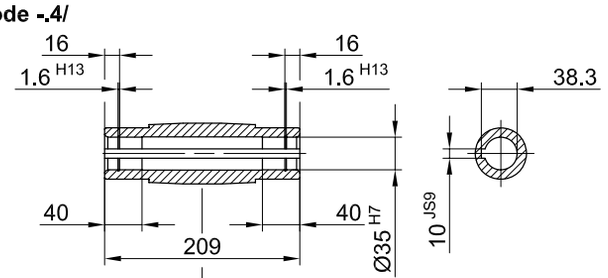

Code -.1/

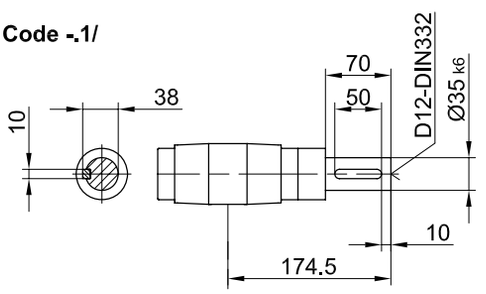

Code -.5/

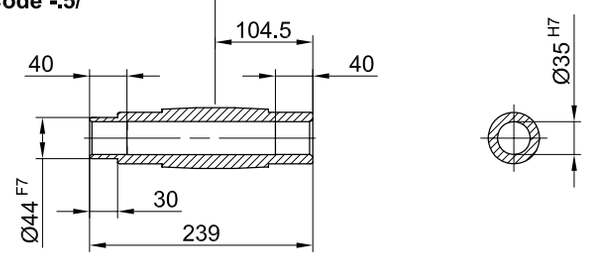

Code -.3/

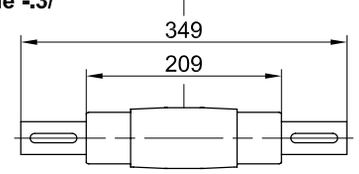

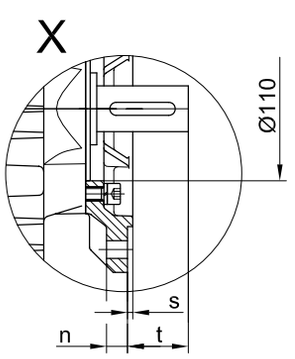

	b	c	d
BS20	89	50	384.5
BS20Z	150	39	434.5

Flanschmasse

BS20(Z)	k	l	m	n	o	p	q	s	t
Standard -3.V/	250	215	180	16	13.5	227.5	128	4	46.5
klein -2.V/	200	165	130	12	11	224.5	125	3.5	49.5
gross -4.V/	300	265	230	20	13.5	233.5	134	4	40.5

The actual gearbox design can vary from the geometry shown.

BS20-BS20Z-SN

Flansch mit Gewindelöchern vorne

Code -7.V/

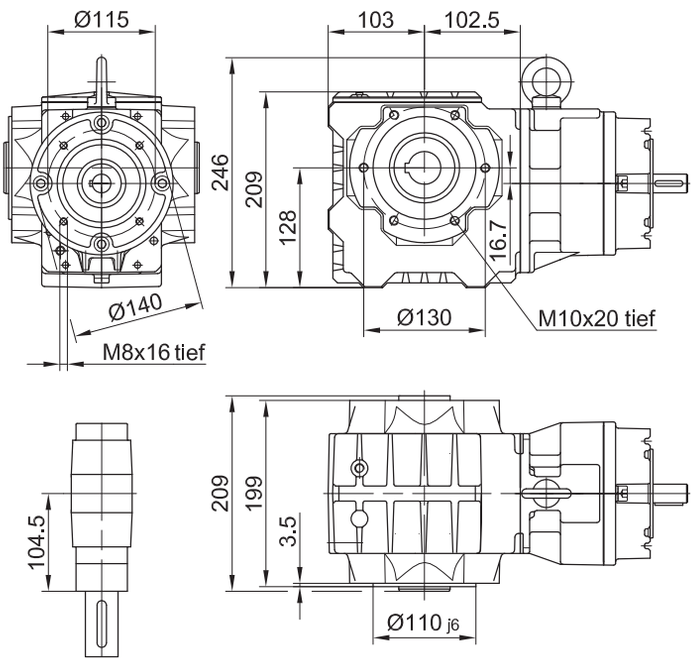

mit Drehmomentstütze vorne

Code -5.V/

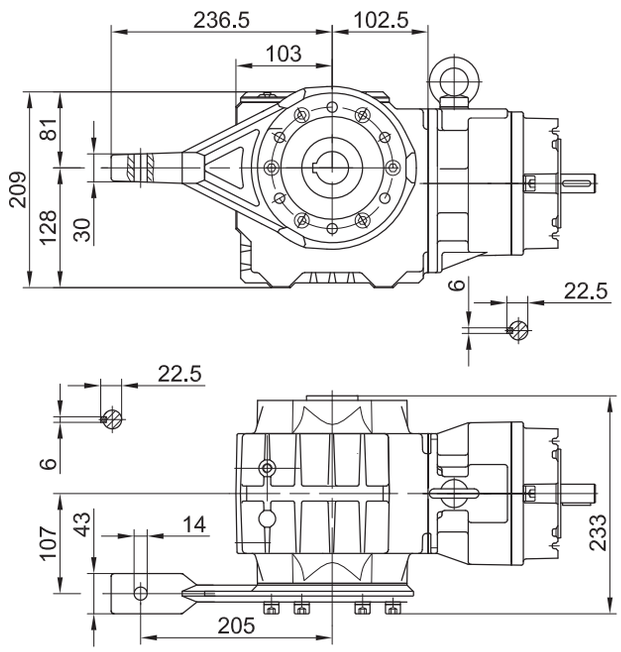

Fuss mit Gewindelöchern unten

Code -6.U/

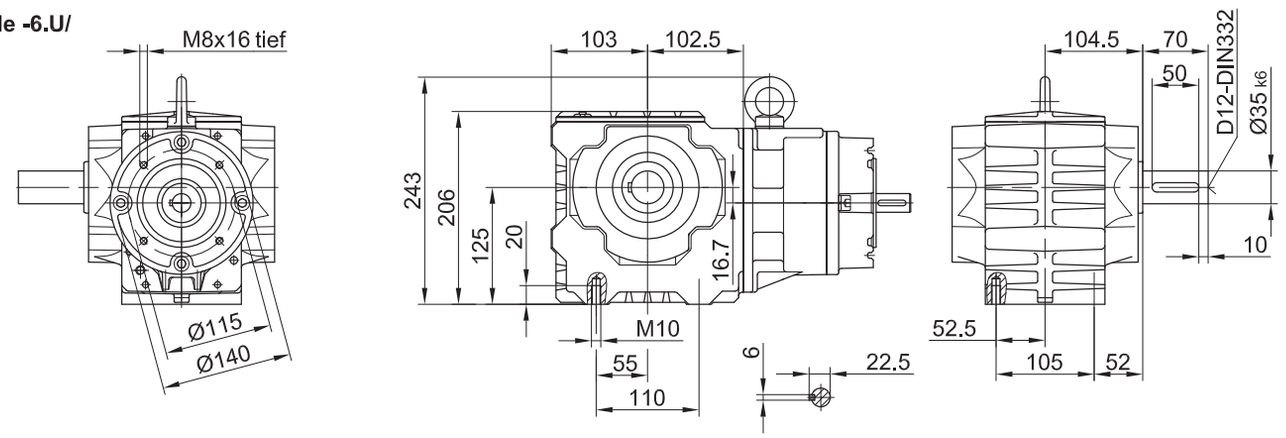

Fuss mit Durchgangslöchern unten

Code -1.U/

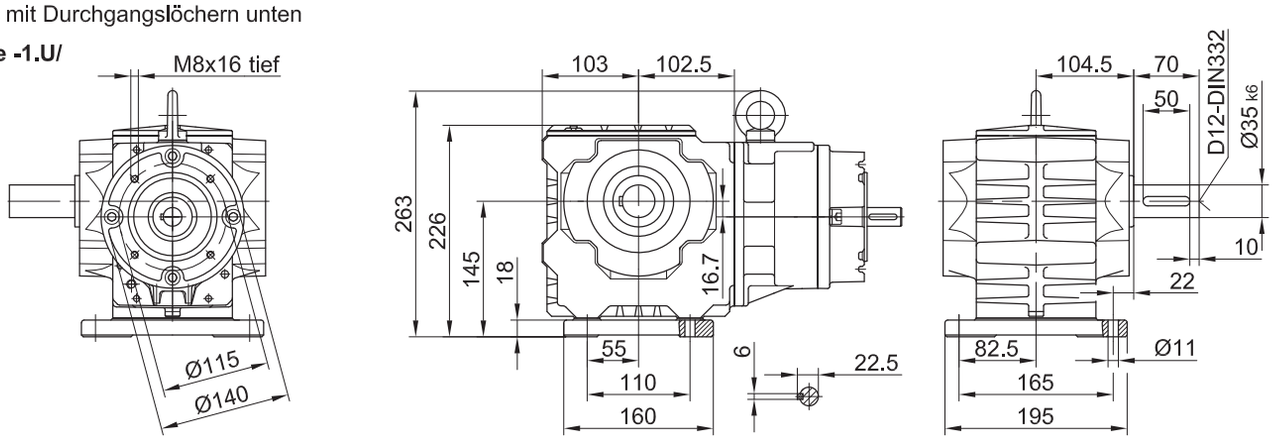

The actual gearbox design can vary from the geometry shown.

14

Input group

Dimensions of input group worm geard motors SN

BS30-BS30Z-SN

Flansch mit Durchgangslöchern vorne

Code -3.V/
(Code -4.V/)

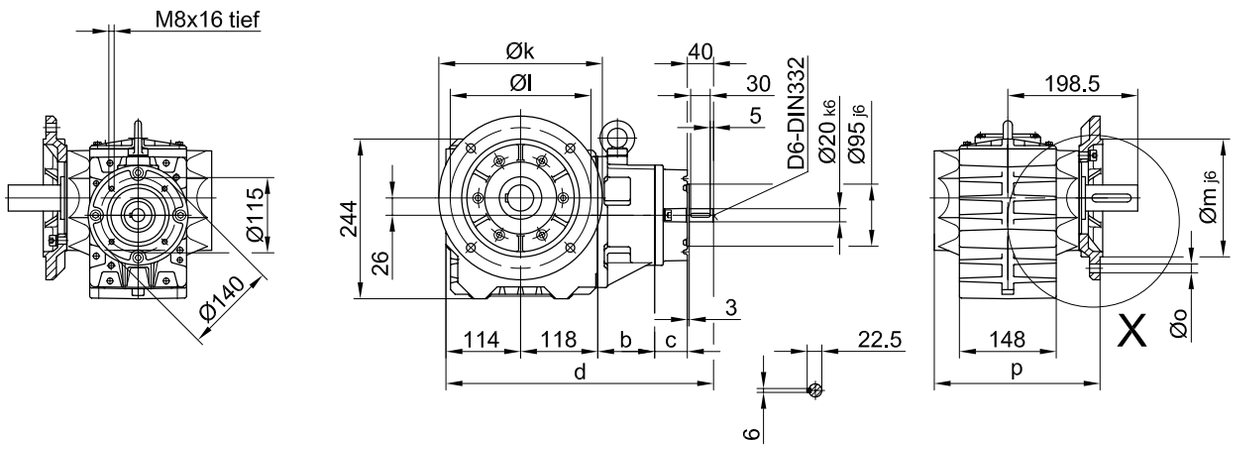

Code -.4/

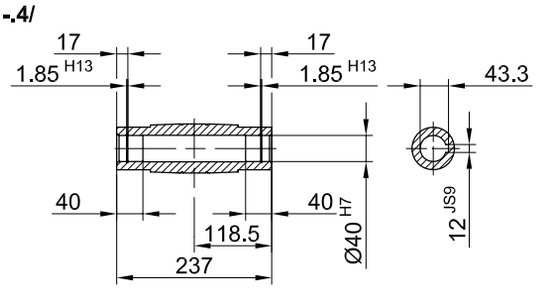

Code -.1/

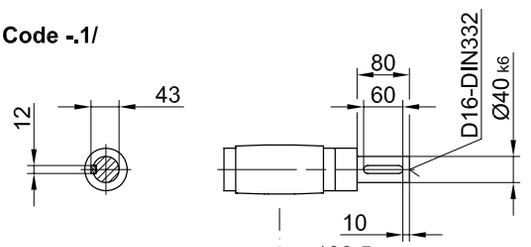

Code -.5/

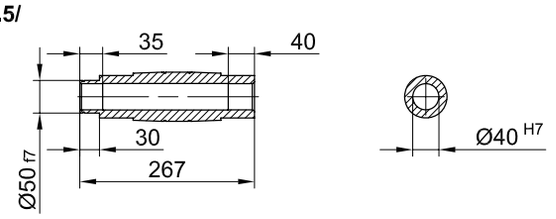

Code -.3/

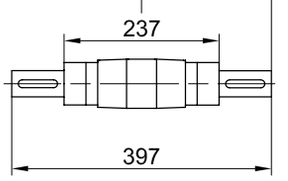

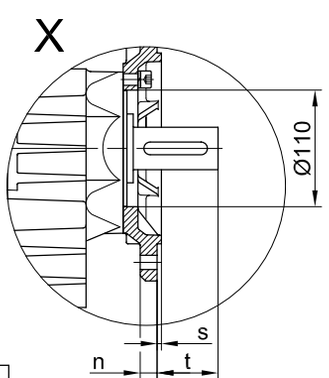

	b	c	d
BS30	87	50	409
BS30Z	141.5	39	452.5

Flanschmasse

BS30(Z)	k	l	m	n	o	p	q	s	t
Standard -3.V/	250	215	180	16	13.5	253.5	141	4	57.5
gross -4.V/	300	265	230	20	13.5	259.5	147	4	51.5

The actual gearbox design can vary from the geometry shown.

BS30-BS30Z-SN

Flansch mit Gewindelöchern vorne

Code -7.V/

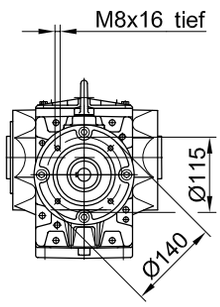

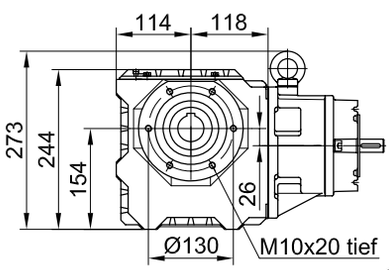

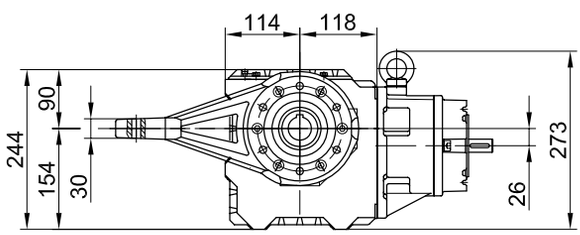

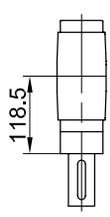

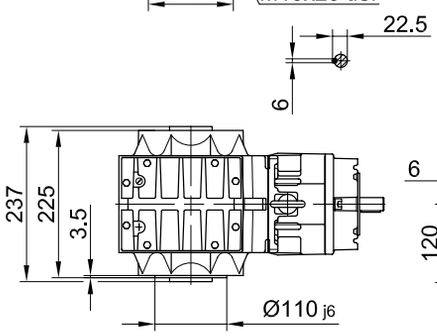

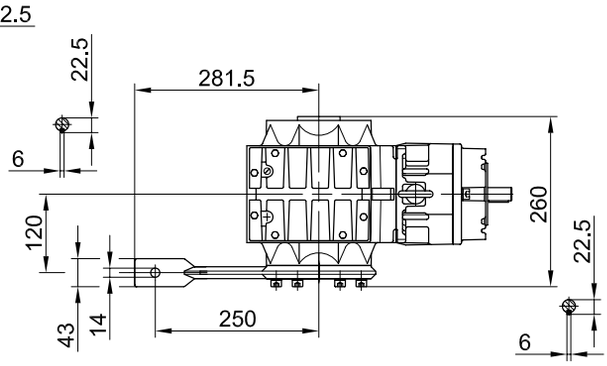

Fuss mit Gewindelöchern unten

Code -6.U/

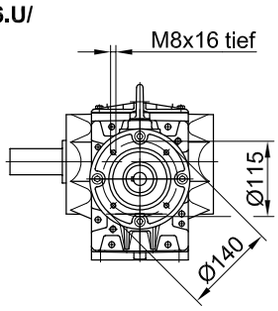

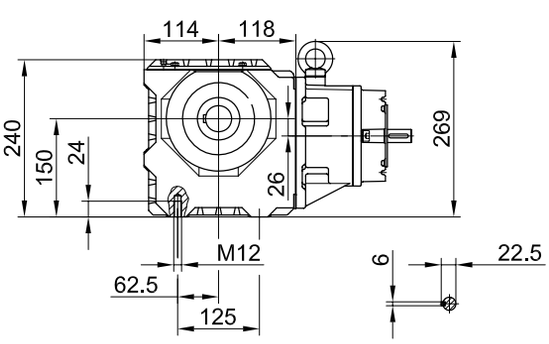

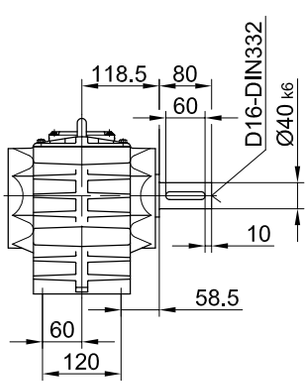

Fuss mit Durchgangslöchern unten

Code -1.U/

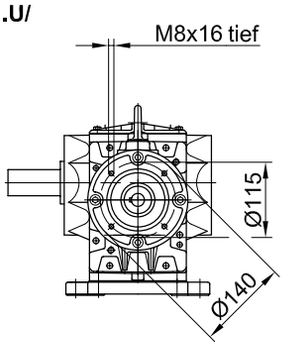

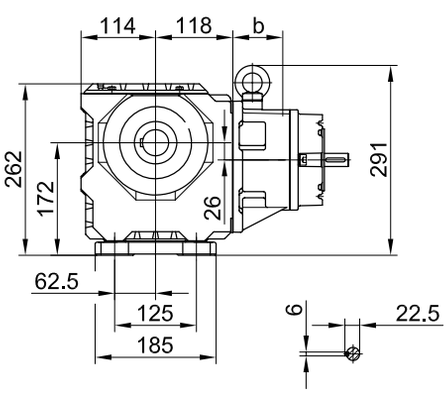

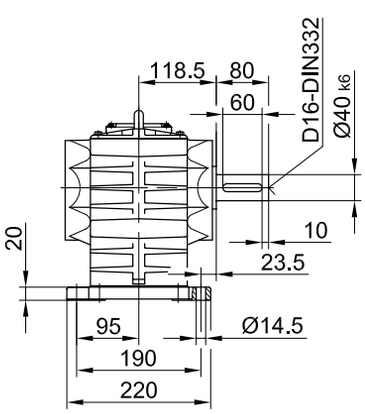

The actual gearbox design can vary from the geometry shown.

Input group

Dimensions of input group worm geard motors SN

BS40-BS40Z

Flansch mit Durchgangslöchern vorne

Code -3.V/

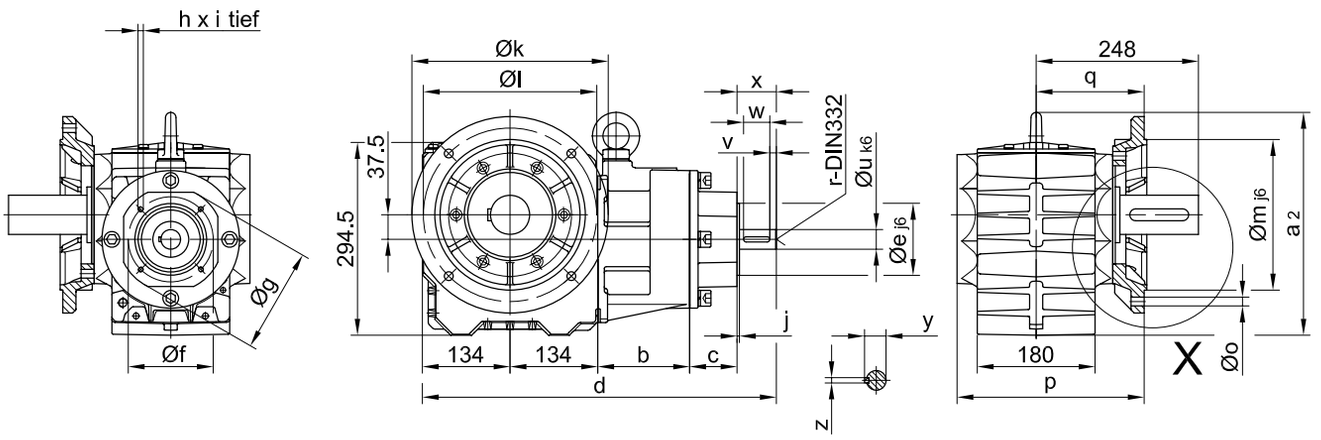

Code -.4/

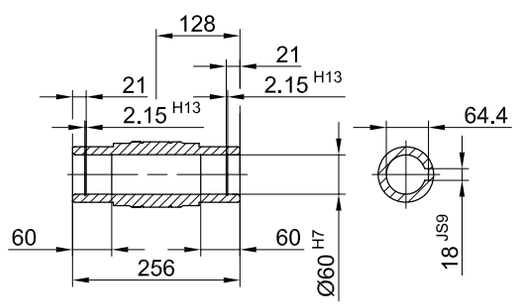

Code -.1/

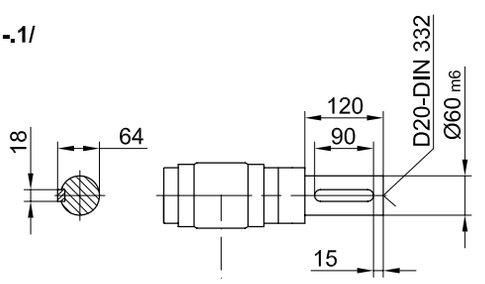

Code -.5/

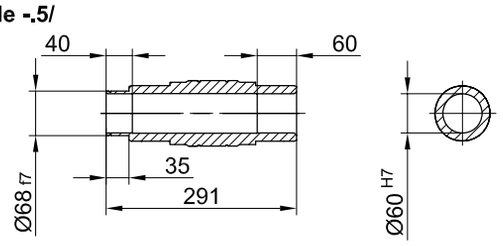

Code -.3/

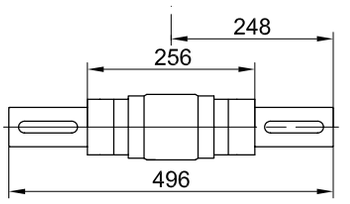

	a_1	a_2	a_3	b	c	d	e	f	g	h	i	j
BS40	336.5	340.5	358.5	140.5	72.5	541	110	130	160	M8	16	3.5
BS40Z	293	297	315	167.5	50	525.5	95	115	140	M8	16	3
	r	u	v	w	x	y	z					
BS40	D10	30	10	40	60	33	8					
BS40Z	D6	20	5	30	40	22.5	6					

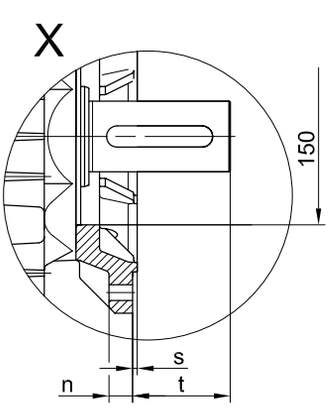

Flanschmasse

BS40(Z)	k	l	m	n	o	p	q	s	t
Standard -3.V/	300	265	230	20	13.5	286	165	4	83

The actual gearbox design can vary from the geometry shown.

BS40-BS40Z

Flansch mit Gewindelöchern vorne

Code -7.V/

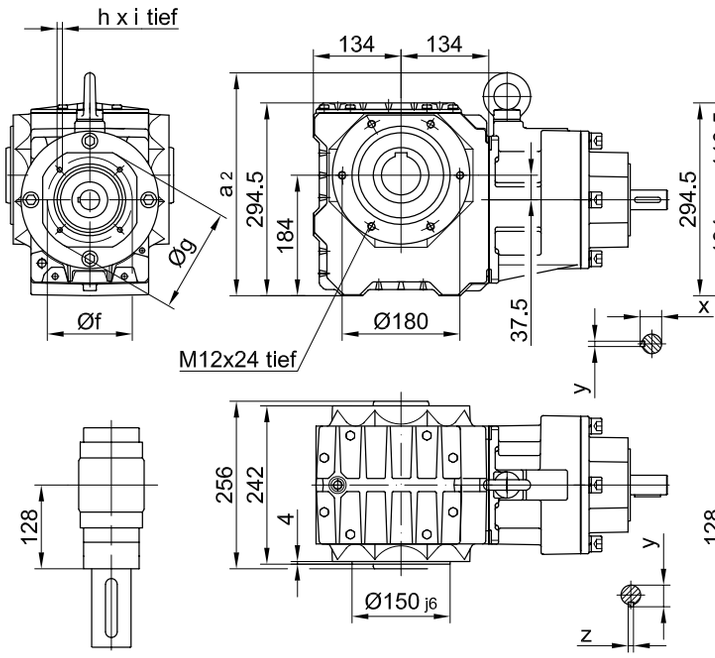

mit Drehmomentstütze vorne

Code -5.V/

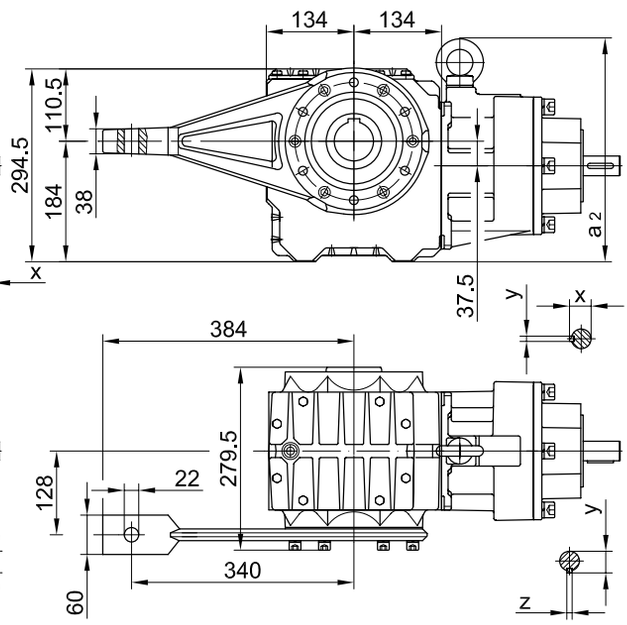

Fuss mit Gewindelöchern unten

Code -6.U/

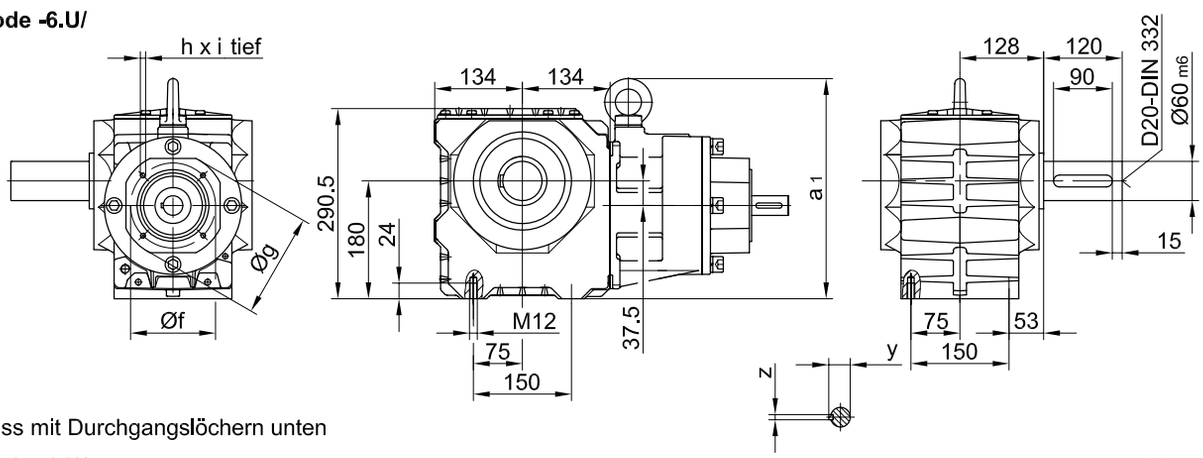

Fuss mit Durchgangslöchern unten

Code -1.U/

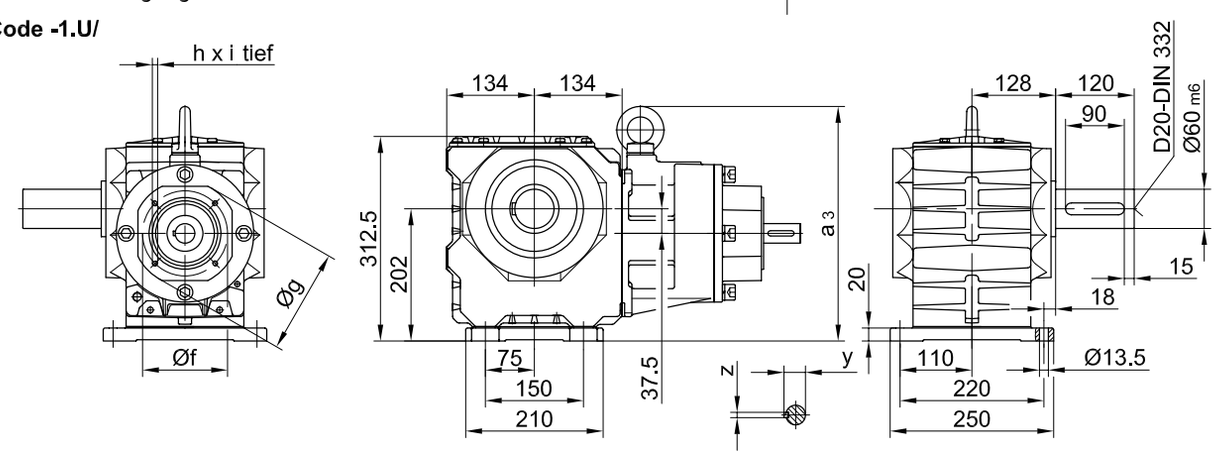

The actual gearbox design can vary from the geometry shown.

Input group

Dimensions of input group C/IEC

B.02-C/IEC/B.03-C/IEC

BS02-C-IEC Schneckengetriebe/ Fuss mit Gewindelöchern unten
worm gear unit/ foot with tapped holes at bottom
Code -6.U/ réducteurs à vis sans fin/ fixation inférieure: trous taraudés

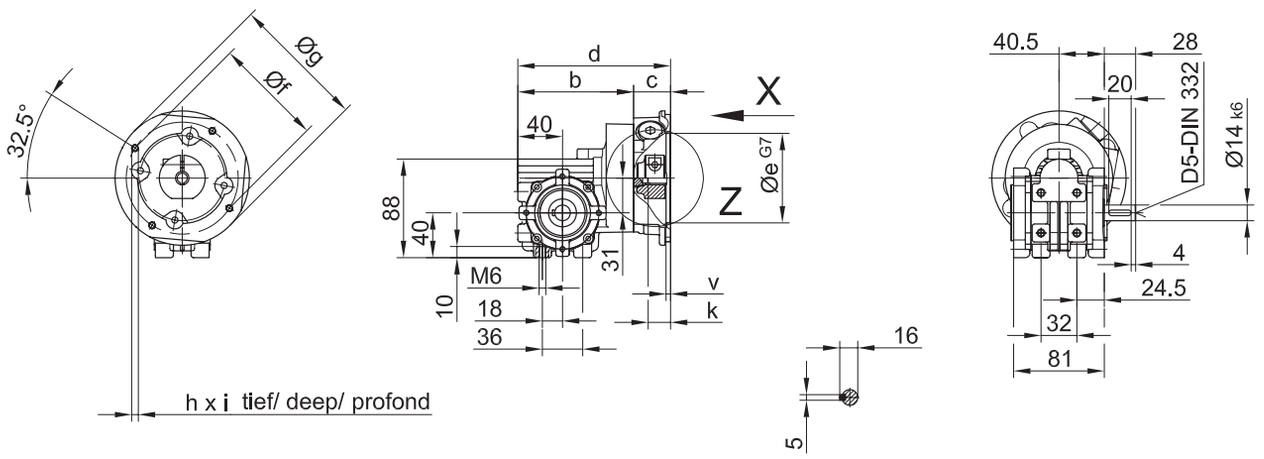

BS03-C-IEC Schneckengetriebe/ Fuss mit Gewindelöchern unten
worm gear unit/ foot with tapped holes at bottom
Code -6.U/ réducteurs à vis sans fin/ fixation inférieure: trous taraudés

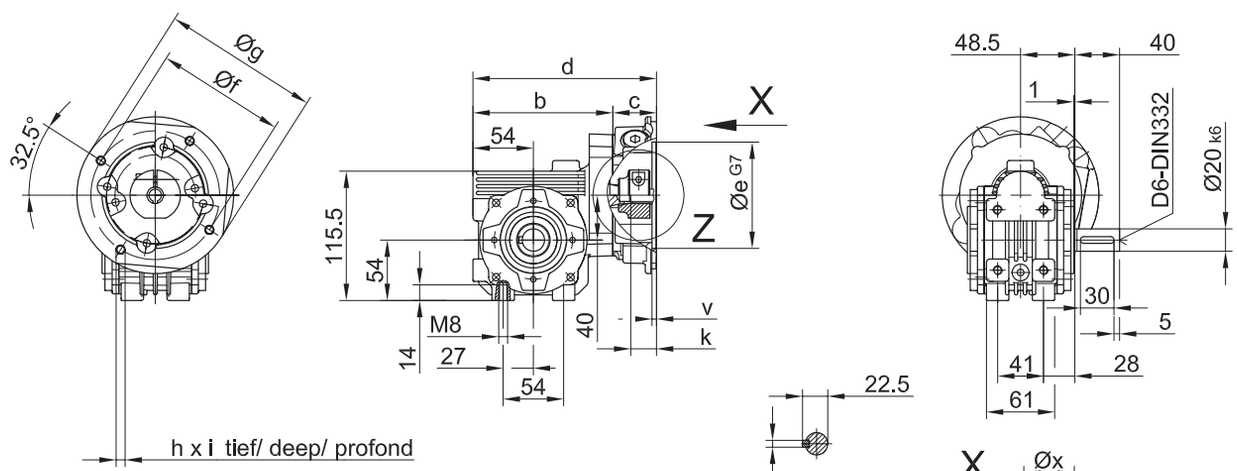

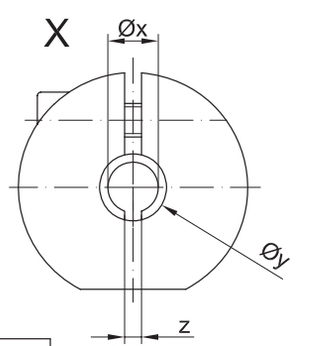

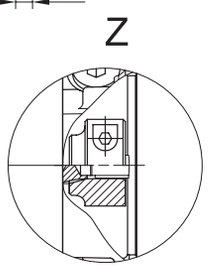

Getriebespezifische Masse bitte vom Standard Massbild entnehmen
For gearbox specific dimensions, please refer to the standard dimension sheets

Anschluss für Normmotoren konform EN 50347
Gear unit input for standard motors acc. to EN 50347
Pour moteur normalisé suivant EN 50347

	b	c	d	e	f	g	h	i	k	v	x	y	z
BS02-IEC56	103.5	33	136.5	80	100	120	4xM6	15	20	4	9	12	3
BS02-IEC63	105.5	39	144.5	95	115	140	4xM8	16	23	4	11	14.8	4

	b	c	d	e	f	g	h	i	k	v	x	y	z
BS03-IEC63	125	39	164	95	115	140	4xM8	16	23	4	11	14.8	4
BS03-IEC71	169	41.5	210.5	110	130	200	4xM8	16	30	5	14	18.9	5
BS03-IEC80	169	41.5	210.5	130	165	200	4xM10	20	40	7	19	25	6

The actual gearbox design can vary from the geometry shown.

B.04-C/IEC/B.05-C/IEC

BG04-C-IEC Stirnradgetriebe/ Fussausführung mit Durchgangslöcher

Code -11/

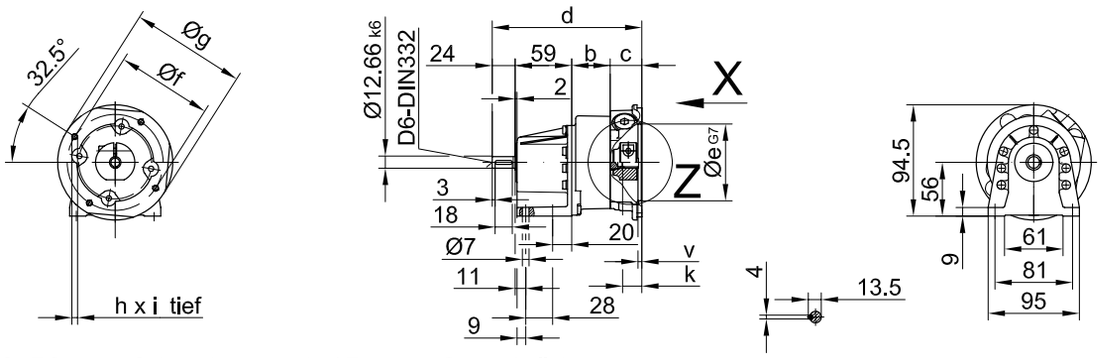

BS04-C-IEC Schneckengetriebe/ Fuss mit Gewindelöchern unten

Code -6.U/

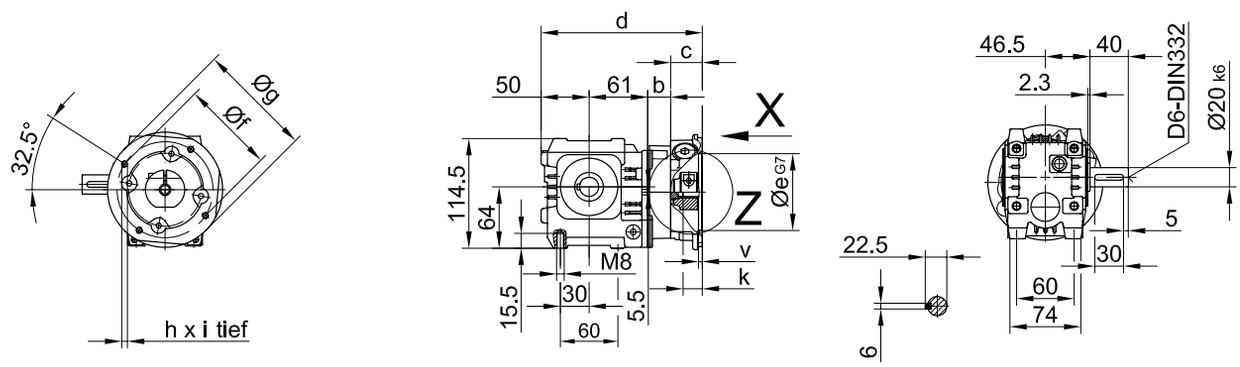

BG05-C-IEC Stirnradgetriebe/ Fussausführung mit Durchgangslöcher

Code -11/

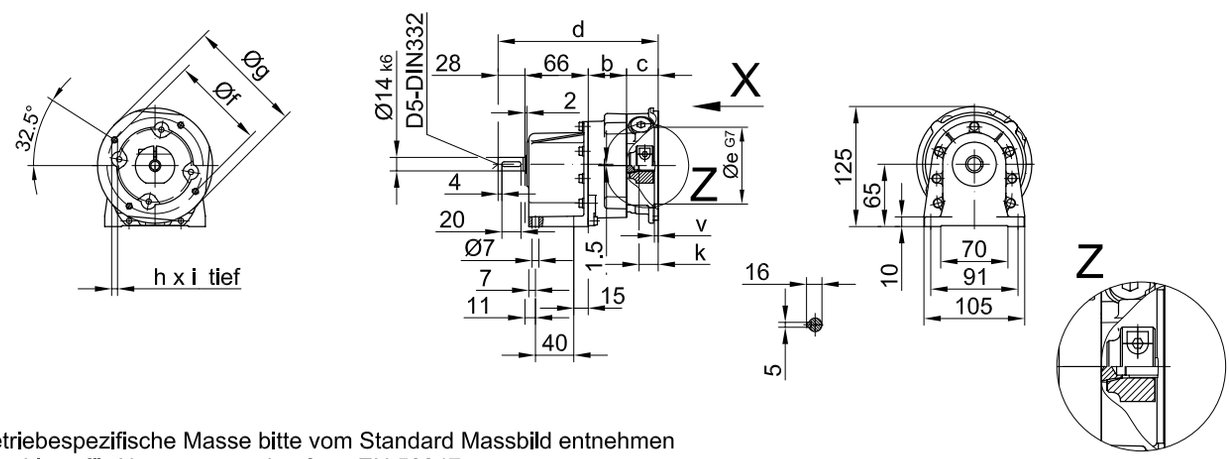

Getriebespezifische Masse bitte vom Standard Massbild entnehmen
Anschluss für Normmotoren konform EN 50347

	b	c	d	e	f	g	h	i	k	v	x	y	z
BG04-C-IEC56	40	33	156	80	100	120	4xM6	15	20	4	9	12	3
BS04-C-IEC56	24	33	168	80	100	120	4xM6	15	20	4	9	12	3
BS04-C-IEC63	26	39	176	95	115	140	4xM8	16	23	4	11	14.8	4

	b	c	d	e	f	g	h	i	k	v	x	y	z
BG05-C-IEC56	38	33	165	80	100	120	4xM6	15	20	4	9	12	3
BG05-C-IEC63	40	39	173	95	115	140	4xM8	16	23	4	11	14.8	4

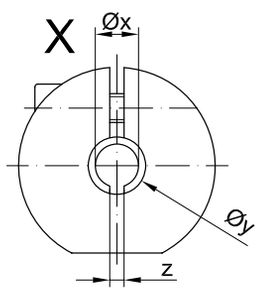

The actual gearbox design can vary from the geometry shown.

Input group

Dimensions of input group C/IEC

B.06-C/IEC

BG06-C-IEC Stirnradgetriebe/ Fussausführung mit Durchgangslöcher

Code -11/

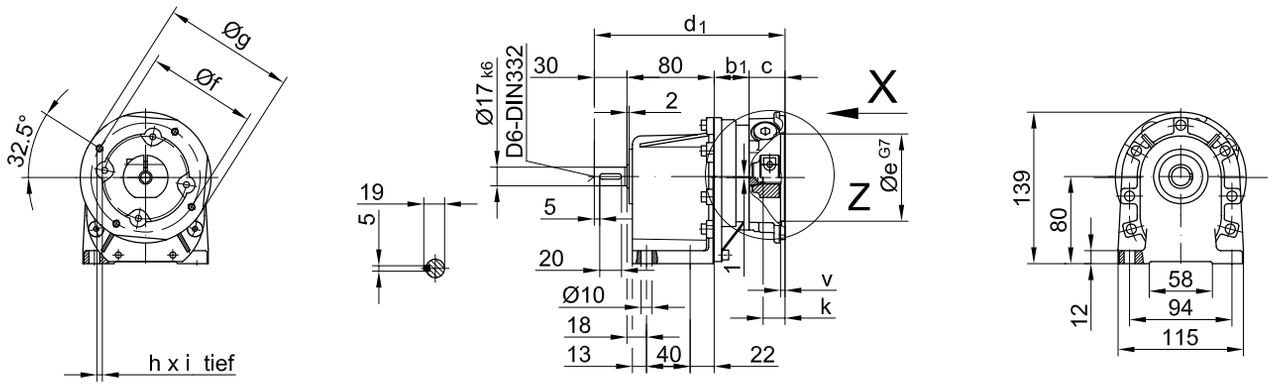

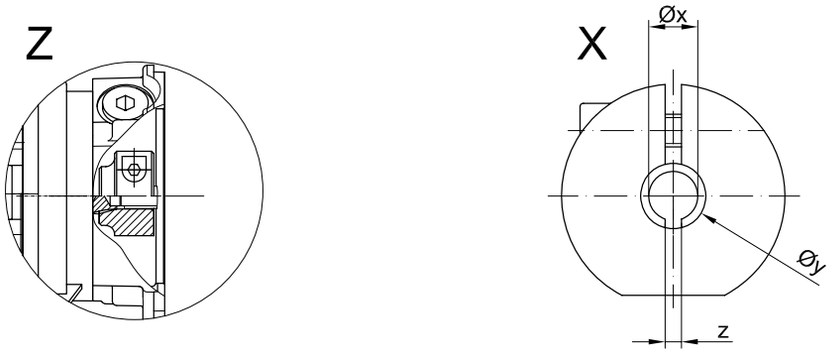

Getriebespezifische Masse bitte vom Standard Massbild entnehmen
Anschluss für Normmotoren konform EN 50347

	b_1	b_4	c	d_1	d_4	e	f	g	h	i	k	v	x	y	z
BG06-C-IEC56	32	-	33	175	-	80	100	120	4xM6	15	20	4	9	24	3
BS06-C-IEC56	-	28	33	-	199	80	100	120	4xM6	15	20	4	9	24	3

	b_1	b_2	b_3	b_4	c	d_1	d_2	d_3	d_4
B.06-C-IEC63	34	96	30	30	39	183	135	216	207
B.06-C-IEC71	78	144	74	74	41.5	229.5	185.5	262.5	253.5
B.06-C-IEC80	78	144	74	74	41.5	229.5	185.5	262.5	253.5

	e	f	g	h	i	k	v	x	y	z
B.06-C-IEC63	95	115	140	4xM8	16	23	4	11	14.8	4
B.06-C-IEC71	110	130	160	4xM8	16	30	5	14	18.9	5
B.06-C-IEC80	130	165	200	4xM10	20	40	7	19	25	6

The actual gearbox design can vary from the geometry shown.

B.06-C/IEC

BF06-C-IEC Flachgetriebe mit Drehmomentstütze

Code -0./

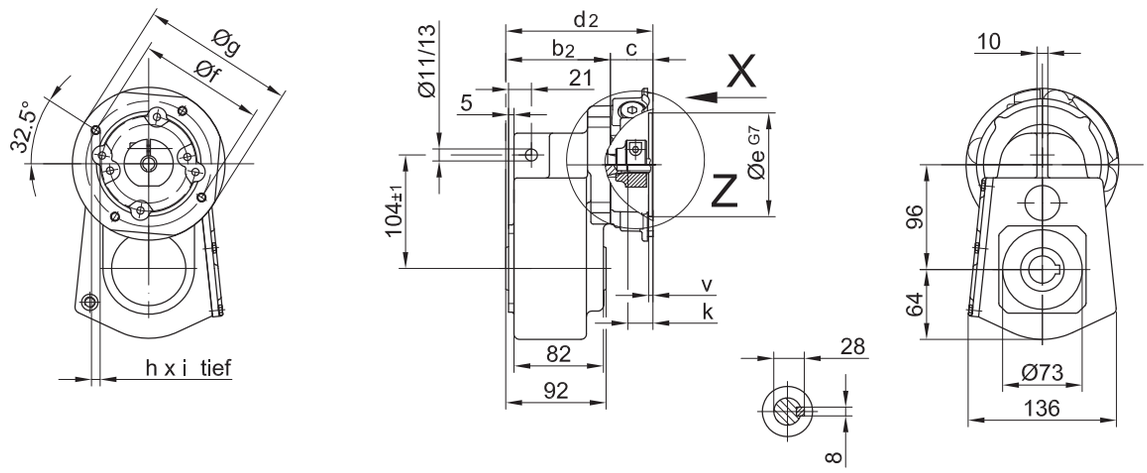

BK06-C-IEC Kegelradgetriebe/ Fuss mit Gewindelöchern unten

Code -6.U/

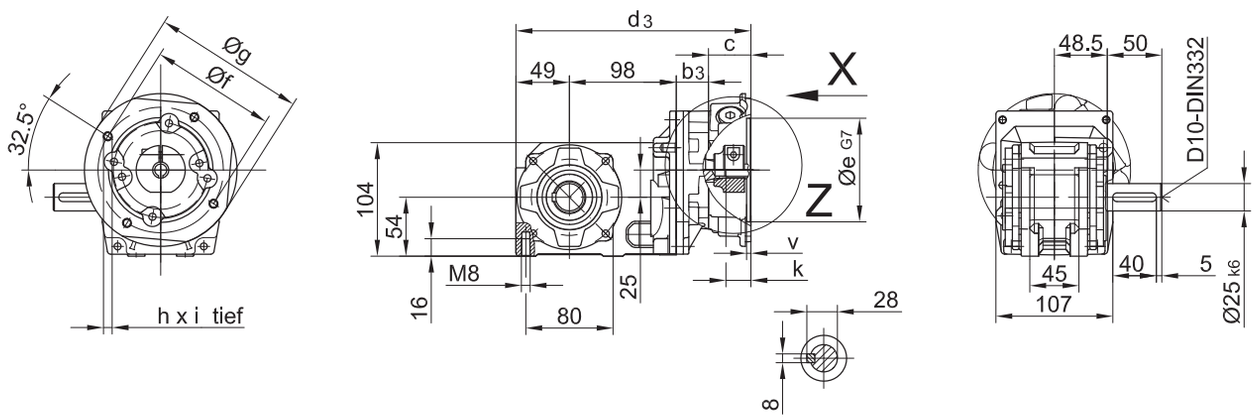

BS06-C-IEC Schneckengetriebe/ Fuss mit Gewindelöchern unten

Code -61U/

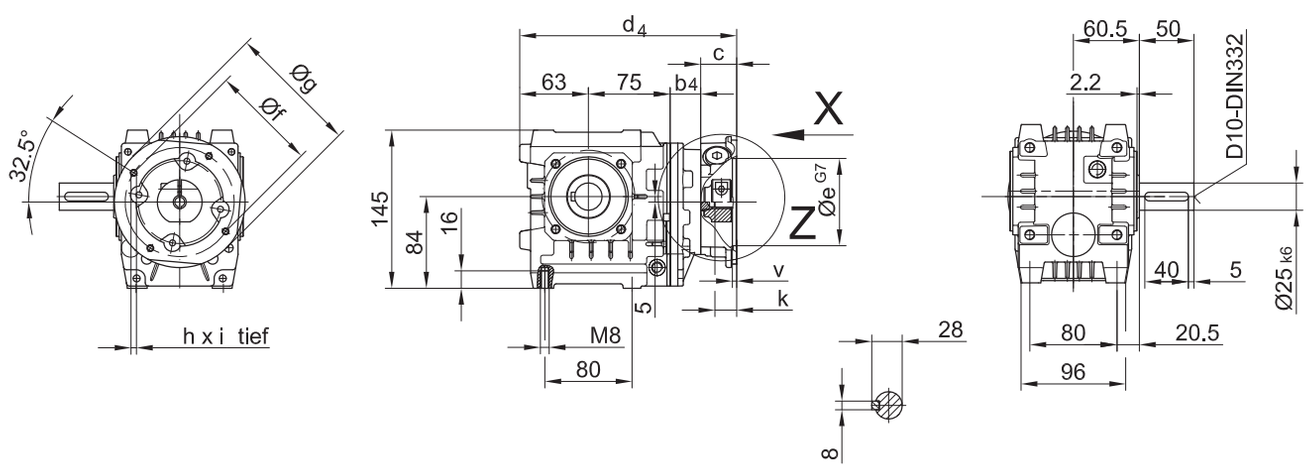

The actual gearbox design can vary from the geometry shown.

Input group

Dimensions of input group C/IEC

B.10-B.10Z-C/IEC

BG10-BG10Z-C-IEC Stirnradgetriebe/ Fussausführung mit Durchgangslöchern
BG10X-BG10XZ-C-IEC

Code -11/

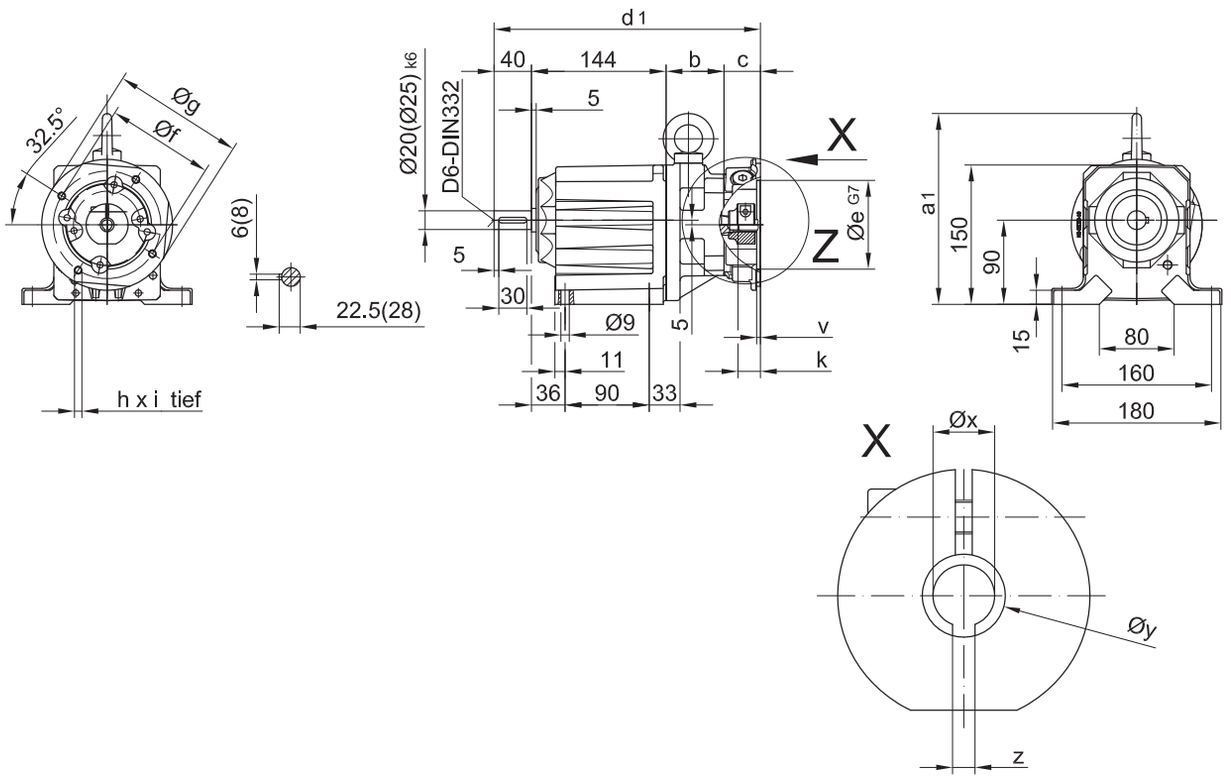

Getriebespezifische Masse bitte vom Standard Massbild entnehmen
Anschluss für Normmotoren konform EN 50347

	a_1	a_2	a_3	a_4	b	c	d_1	d_2	d_3	d_4
B.10Z-C-IEC56	204	317	213	213	86	33	303	240	325	292
B.10-C-IEC63	204	317	213	213	62	39	285	222	307	274
B.10Z-C-IEC63	204	317	213	213	88	39	311	248	333	300
B.10-C-IEC71	207	320	216	216	66	41.5	291.5	228.5	313.5	280.5
B.10Z-C-IEC71	204	317	213	213	132	41.5	357.5	294.5	379.5	346.5
B.10-C-IEC80	207	320	216	216	66	41.5	291.5	228.5	313.5	280.5
B.10Z-C-IEC80	204	317	213	213	132	41.5	357.5	294.5	379.5	346.5
B.10-C-IEC90	216	329	225	225	80.5	41.5	306	243	328	295

	e	f	g	h	i	k	v	x	y	z
B.10Z-C-IEC56	80	100	120	4xM6	15	20	4	9	12	3
B.10-C-IEC63	95	115	140	4xM8	16	23	4	11	14.8	4
B.10Z-C-IEC63	95	115	140	4xM8	16	23	4	11	14.8	4
B.10-C-IEC71	110	130	200	4xM8	16	30	5	14	18.9	5
B.10Z-C-IEC71	110	130	200	4xM8	16	30	5	14	18.9	5
B.10-C-IEC80	130	165	200	4xM10	20	40	7	19	25	6
B.10Z-C-IEC80	130	165	200	4xM10	20	40	7	19	25	6
B.10-C-IEC90	130	165	200	4xM10	20	50	5	24	31.5	8

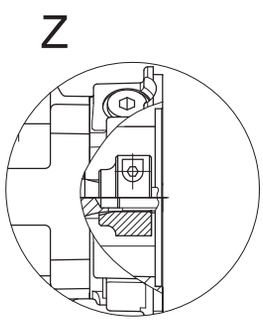

The actual gearbox design can vary from the geometry shown.

B.10-B.10Z-C/IEC

BF10-BF10Z-C-IEC Flachgetriebe mit Drehmomentstütze

Code -04/

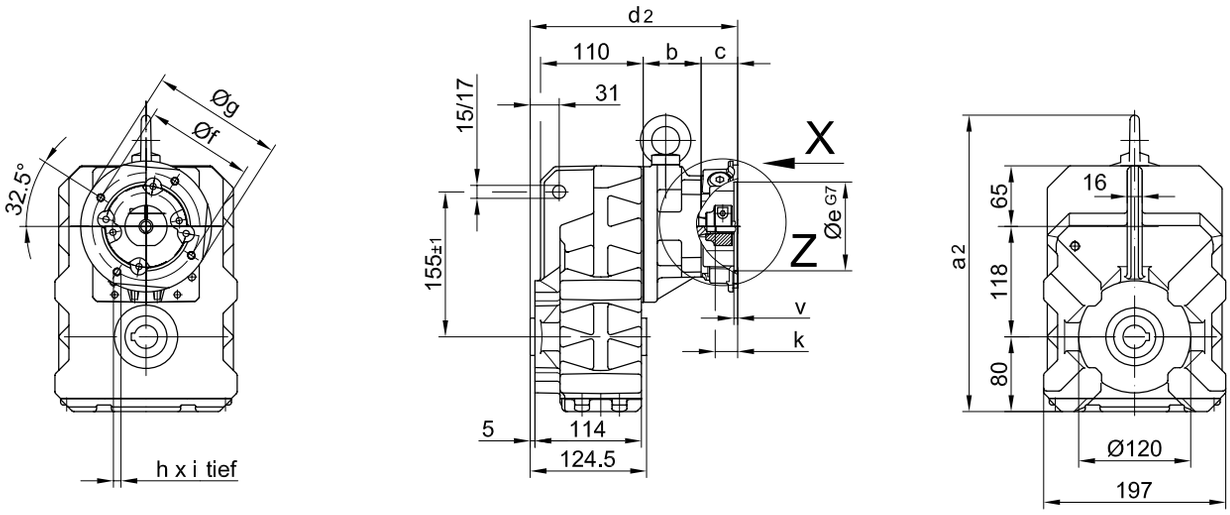

BK10-BK10Z-C-IEC Kegelradgetriebe/ Fuss mit Gewindelöchern unten

Code -61U/

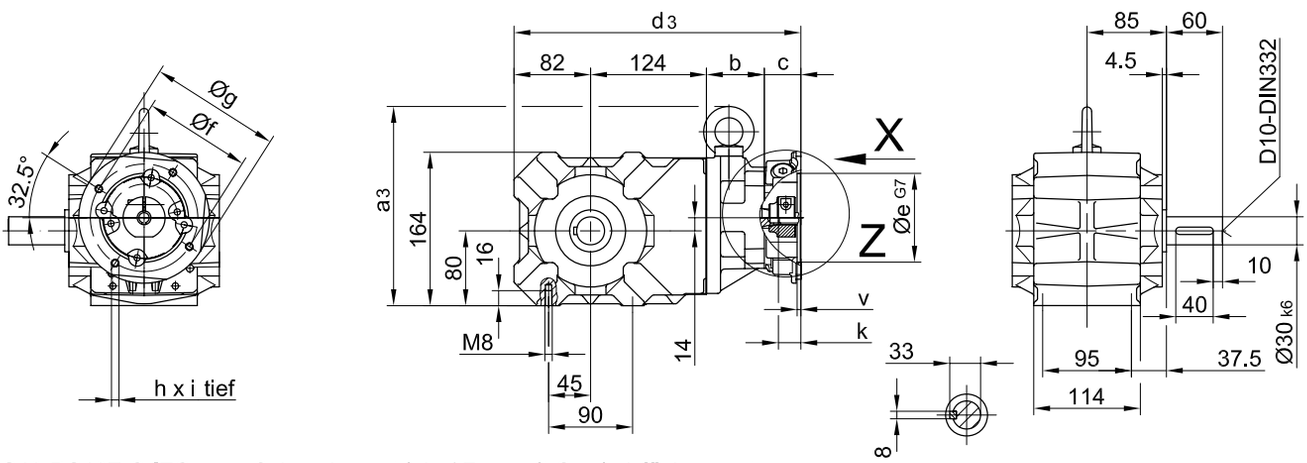

BS10-BS10Z-C-IEC Schneckengetriebe/ Fuss mit Gewindelöchern unten

Code -61U/

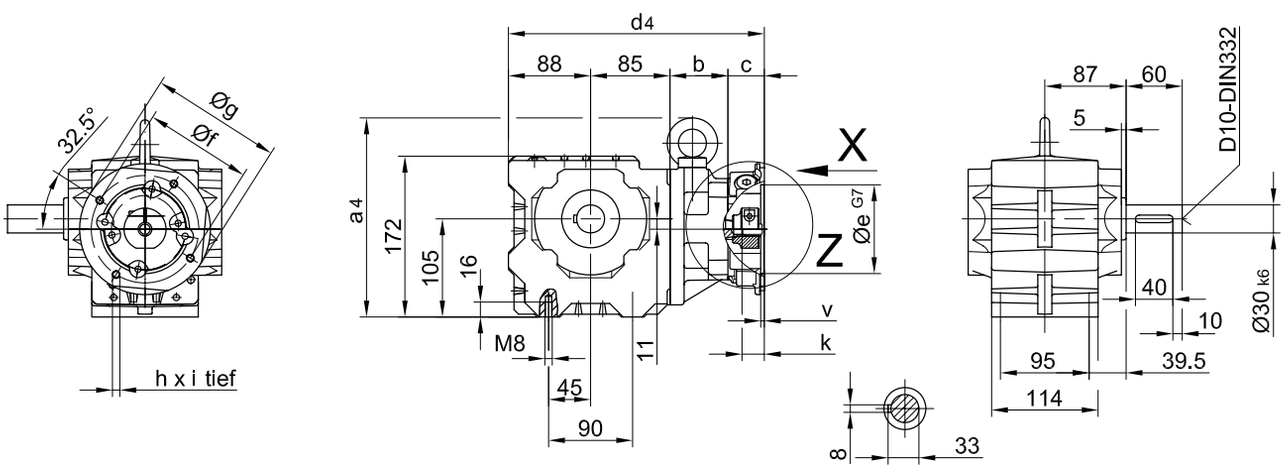

The actual gearbox design can vary from the geometry shown.

14

Input group

Dimensions of input group C/IEC

B.20-B.20Z-C/IEC

BG20-BG20Z-C-IEC Stirnradgetriebe/ Fussausführung mit Durchgangslöchern

Code -11/

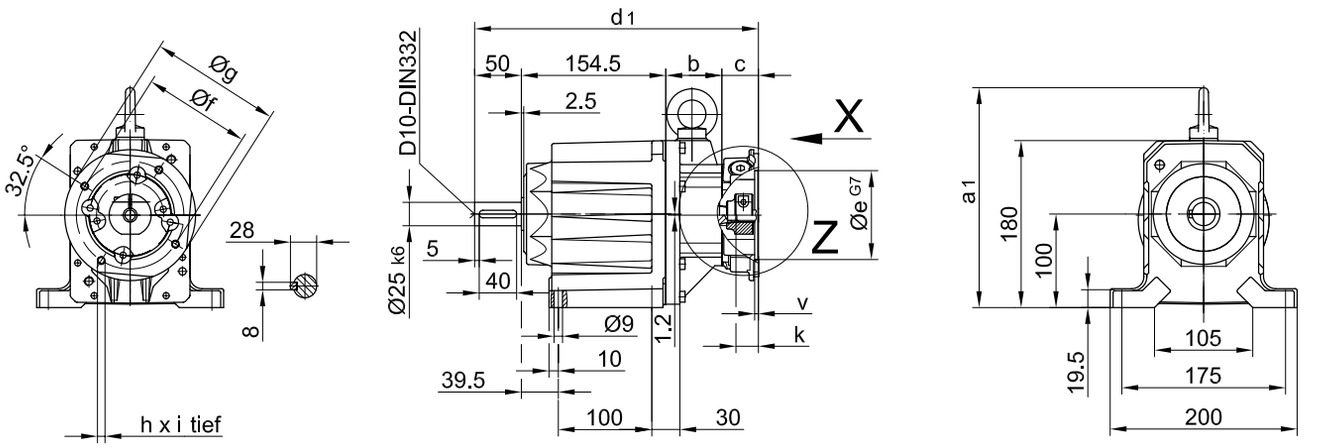

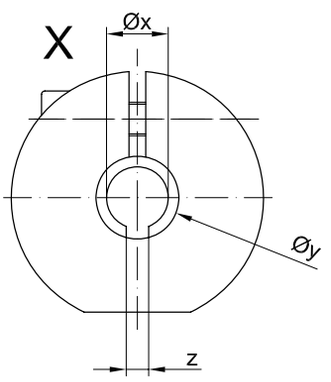

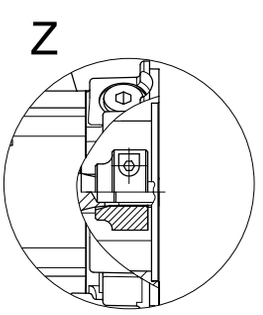

Getriebespezifische Masse bitte vom Standard Massbild entnehmen
Anschluss für Normmotoren konform EN 50347

	a_1	a_2	a_3	a_4	b	c	d_1	d_2	d_3	d_4
B.20Z-C-IEC56	233.3	359.5	252.8	242.8	100	33	337.5	264	379	338.5
B.20-C-IEC63	233.8	360	253.3	243.3	60	39	303.5	230	345	304.5
B.20Z-C-IEC63	233.3	359.5	252.8	242.8	102	39	345.5	272	387	346.5
B.20-C-IEC71	233.8	360	253.3	243.3	64	41.5	310	236.5	351.5	311
B.20Z-C-IEC71	233.3	359.5	252.8	242.8	146	41.5	392	318.5	433.5	393
B.20-C-IEC80	233.8	360	253.3	243.3	64	41.5	310	236.5	351.5	311
B.20Z-C-IEC80	233.3	359.5	252.8	242.8	146	41.5	392	318.5	433.5	393
B.20-C-IEC90	233.8	360	253.3	243.3	78.5	41.5	324.5	251	366	325.5

	e	f	g	h	i	k	v	x	y	z
B.20Z-C-IEC56	80	100	120	4xM6	15	20	4	9	12	3
B.20-C-IEC63	95	115	140	4xM8	16	23	4	11	14.8	4
B.20Z-C-IEC63	95	115	140	4xM8	16	23	4	11	14.8	4
B.20-C-IEC71	110	130	200	4xM8	16	30	5	14	18.9	5
B.20Z-C-IEC71	110	130	200	4xM8	16	30	5	14	18.9	5
B.20-C-IEC80	130	165	200	4xM10	20	40	7	19	25	6
B.20Z-C-IEC80	130	165	200	4xM10	20	40	7	19	25	6
B.20-C-IEC90	130	165	200	4xM10	20	50	5	24	31.5	8

The actual gearbox design can vary from the geometry shown.

B.20-B.20Z-C/IEC

BF20-BF20Z-C-IEC Flachgetriebe mit Drehmomentstütze

Code -04/

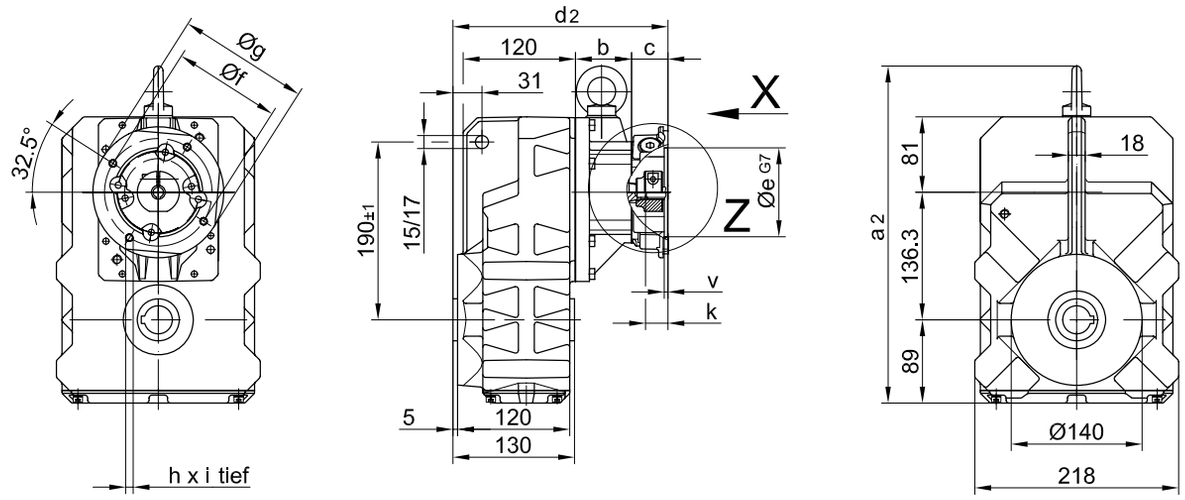

BK20-BK20Z-C-IEC Kegelradgetriebe/ Fuss mit Gewindelöchern unten

Code -61U/

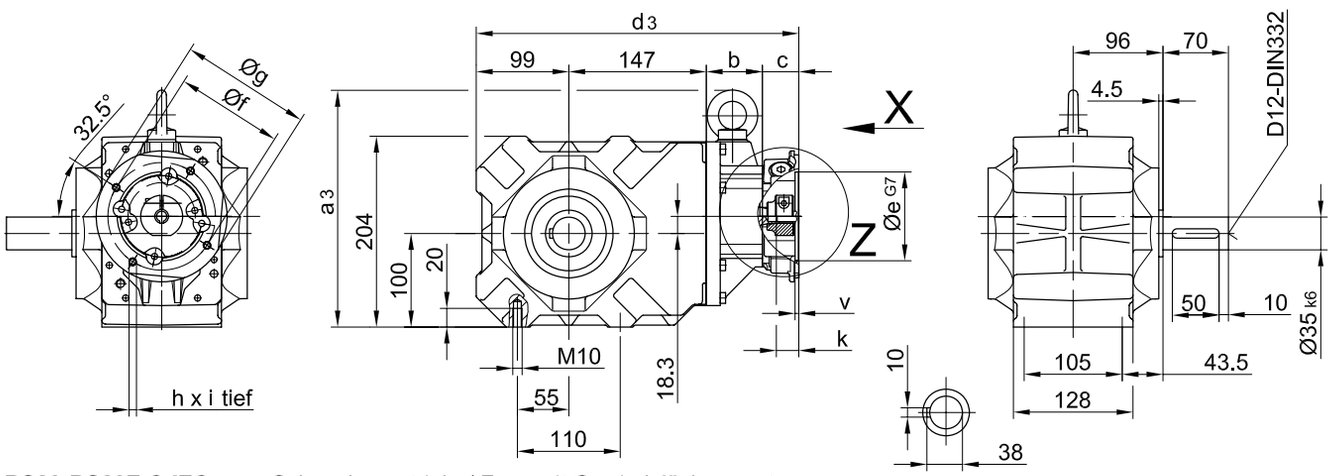

BS20-BS20Z-C-IEC Schneckengetriebe/ Fuss mit Gewindelöchern unten

Code -61U/

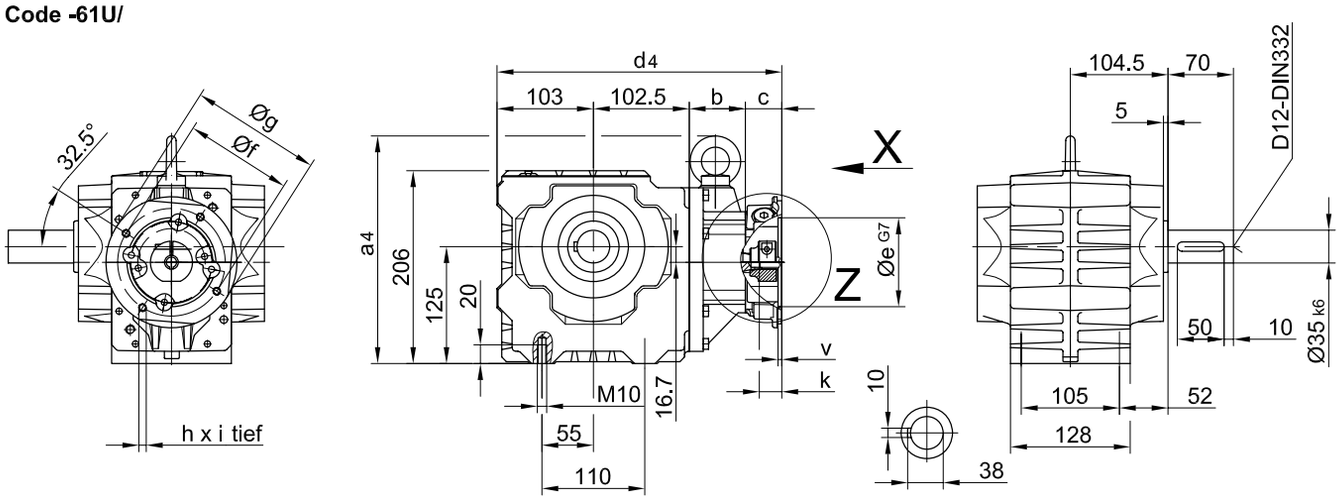

The actual gearbox design can vary from the geometry shown.

Input group

Dimensions of input group C/IEC

B.30-B.30Z-C/IEC

BG30-BG30Z-C-IEC Stirnradgetriebe/ Fussausführung mit Durchgangslöchern

Code -11/

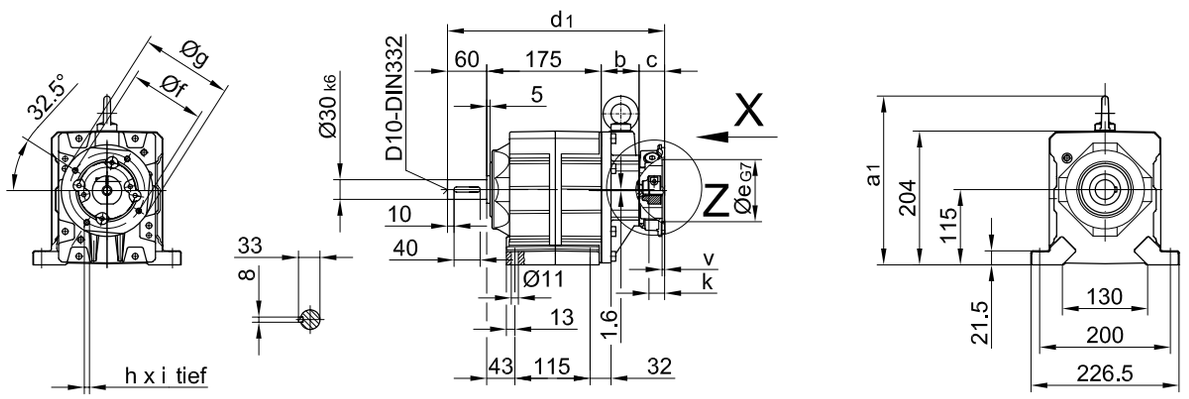

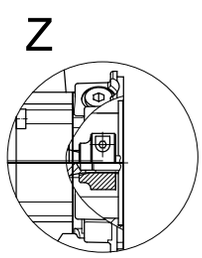

Getriebespezifische Masse bitte vom Standard Massbild entnehmen
Anschluss für Normmotoren konform EN 50347

	a_1	a_2	a_3	a_4	b	c	d_1	d_2	d_3	d_4
B.30-C-IEC63	257.8	404.4	273.1	268.1	58	39	332	241	367	329
B.30Z-C-IEC63	258.5	405.1	273.8	268.8	133.5	39	407.5	316.5	442.5	404.5
B.30-C-IEC71	257.8	404.4	273.1	268.1	62	41.5	338.5	247.5	373.5	335.5
B.30Z-C-IEC71	258.5	405.1	273.8	268.8	133.5	41.5	410	319	445	407
B.30-C-IEC80	257.8	404.4	273.1	268.1	62	41.5	338.5	247.5	373.5	335.5
B.30Z-C-IEC80	258.5	405.1	273.8	268.8	133.5	41.5	410	319	445	407
B.30-C-IEC90	257.8	404.4	273.1	268.1	76.5	41.5	353	262	388	350
B.30Z-C-IEC90	258.5	405.1	273.8	268.8	152	41.5	428.5	337.5	463.5	425.5
B.30-C-IEC100/112	265.4	412	280.7	275.7	83	65	383	292	418	380

	e	f	g	h	i	k	v	x	y	z
B.30-C-IEC63	95	115	140	4xM8	16	23	4	11	14.8	4
B.30Z-C-IEC63	95	115	140	4xM8	16	23	4	11	14.8	4
B.30-C-IEC71	110	130	200	4xM8	16	30	5	14	18.9	5
B.30Z-C-IEC71	110	130	200	4xM8	16	30	5	14	18.9	5
B.30-C-IEC80	130	165	200	4xM10	20	40	7	19	25	6
B.30Z-C-IEC80	130	165	200	4xM10	20	40	7	19	25	6
B.30-C-IEC90	130	165	200	4xM10	20	50	5	24	31.5	8
B.30Z-C-IEC90	130	165	200	4xM10	20	50	5	24	31.5	8
B.30-C-IEC100/112	180	215	250	4xM12	24	60	5	28	35.3	8

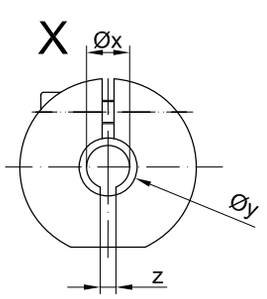

The actual gearbox design can vary from the geometry shown.

B.30-B.30Z-C/IEC

BF30-BF30Z-C-IEC Flachgetriebe mit Drehmomentstütze

Code -04/

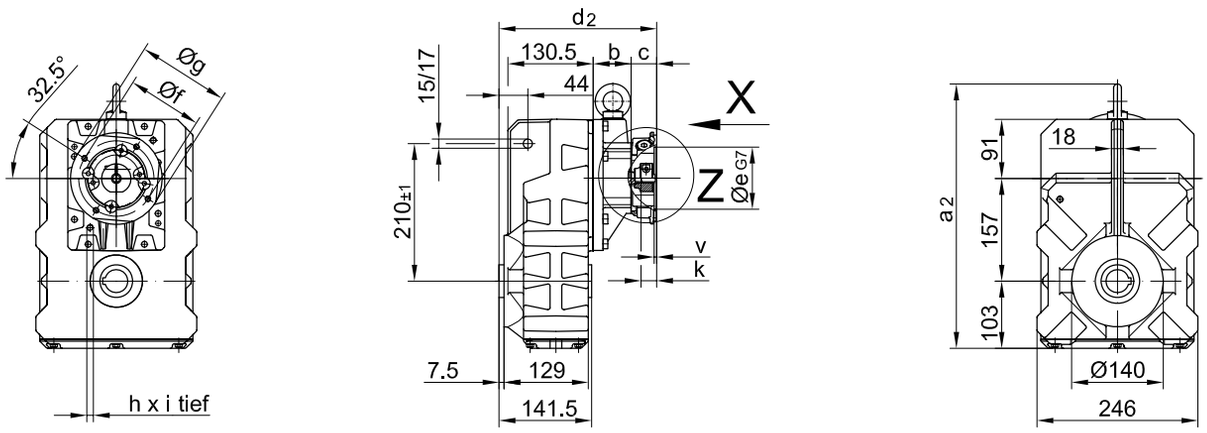

BK30-BK30Z-C-IEC Kegelradgetriebe/ Fuß mit Gewindelöchern unten

Code -61U/

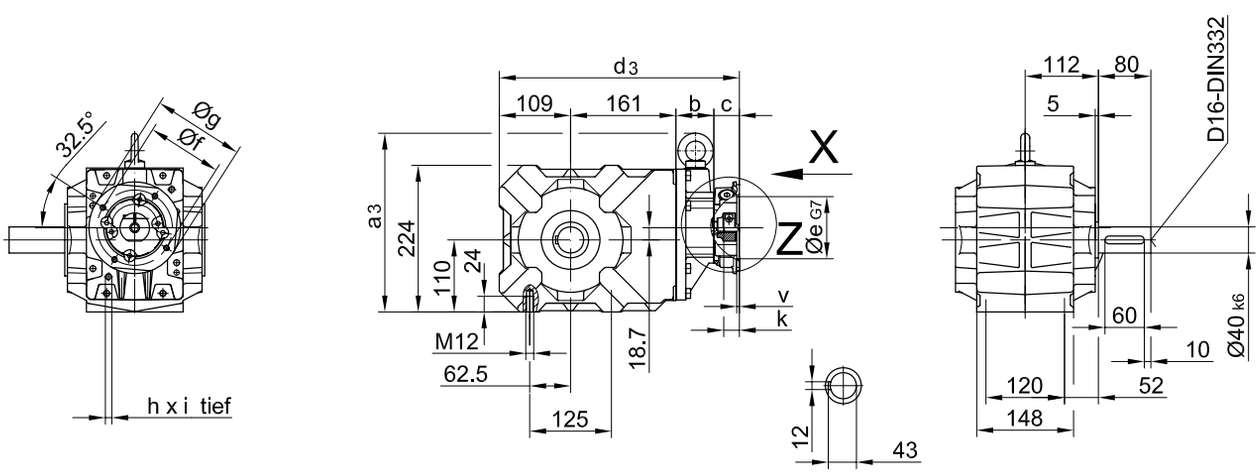

BS30-BS30Z-C-IEC Schneckengetriebe/ Fuss mit Gewindelöchern unten

Code -61U/

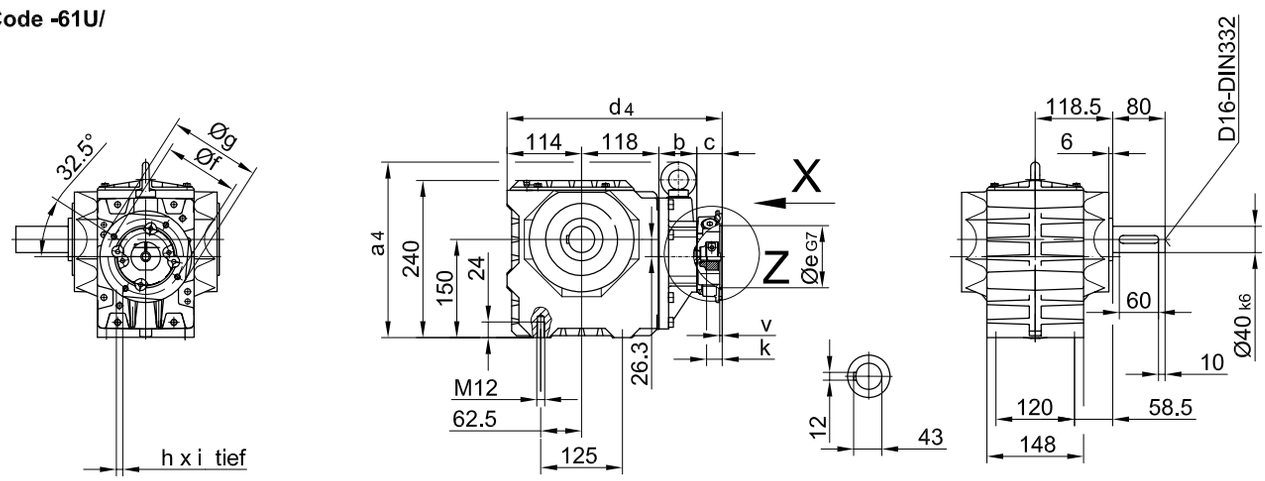

The actual gearbox design can vary from the geometry shown.

Input group

Dimensions of input group C/IEC

B.40-B.40Z-C/IEC

BG40-BG40Z-C-IEC Stirnradgetriebe/ Fussausführung mit Durchgangslöchern

Code -11/

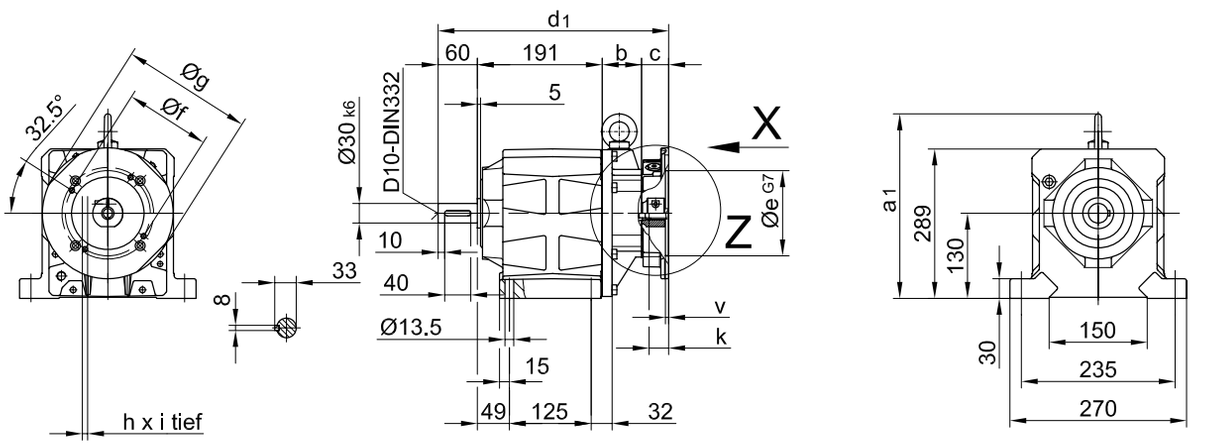

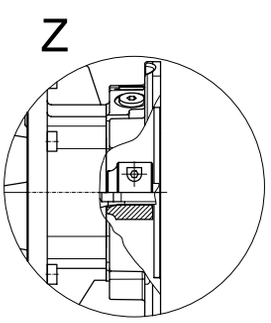

Getriebespezifische Masse bitte vom Standard Massbild entnehmen
Anschluss für Normmotoren konform EN 50347

	a_1	a_2	a_3	a_4	b	c	d_1	d_2	d_3	d_4
B.40Z-C-IEC63	281.8	447.8	292.3	294.3	138.5	39	428.5	340	479.5	445.5
B.40-C-IEC71	281.8	447.8	292.3	294.3	60	41.5	352.5	264	403.5	369.5
B.40Z-C-IEC71	281.8	447.8	292.3	294.3	142.5	41.5	435	346.5	486	452
B.40-C-IEC80	281.8	447.8	292.3	294.3	60	41.5	352.5	264	403.5	369.5
B.40Z-C-IEC80	281.8	447.8	292.3	294.3	142.5	41.5	435	346.5	486	452
B.40-C-IEC90	281.8	447.8	292.3	294.3	74.5	41.5	367	278.5	418	384
B.40Z-C-IEC90	281.8	447.8	292.3	294.3	157	41.5	449.5	361	500.5	466.5
B.40-C-IEC100/112	281.8	447.8	292.3	294.3	81	65	397	308.5	448	414

	e	f	g	h	i	k	v	x	y	z
B.40Z-C-IEC63	95	115	140	4xM8	16	23	4	11	14.8	4
B.40-C-IEC71	110	130	200	4xM8	16	30	5	14	18.9	5
B.40Z-C-IEC71	110	130	200	4xM8	16	30	5	14	18.9	5
B.40-C-IEC80	130	165	200	4xM10	20	40	7	19	25	6
B.40Z-C-IEC80	130	165	200	4xM10	20	40	7	19	25	6
B.40-C-IEC90	130	165	200	4xM10	20	50	5	24	31.5	8
B.40Z-C-IEC90	130	165	200	4xM10	20	50	5	24	31.5	8
B.40-C-IEC100/112	180	215	250	4xM12	24	60	5	28	35.3	8

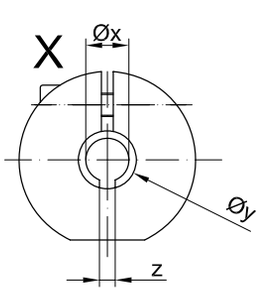

The actual gearbox design can vary from the geometry shown.

B.40-B.40Z-C/IEC

BF40-BF40Z-C-IEC Flachgetriebe mit Drehmomentstütze

Code -04/

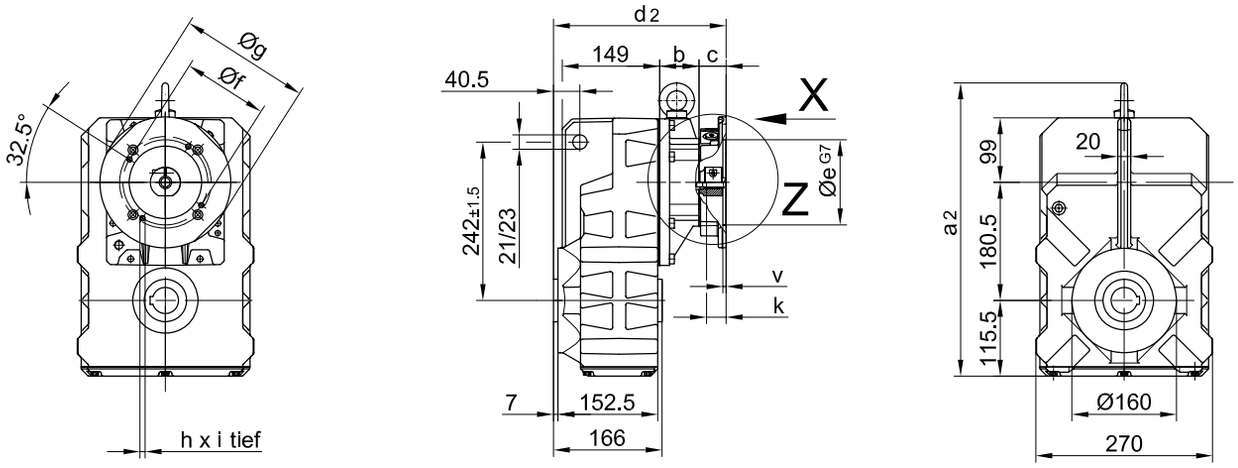

BK40-BK40Z-C-IEC Kegelradgetriebe/ Fuss mit Gewindelöchern unten

Code -61U/

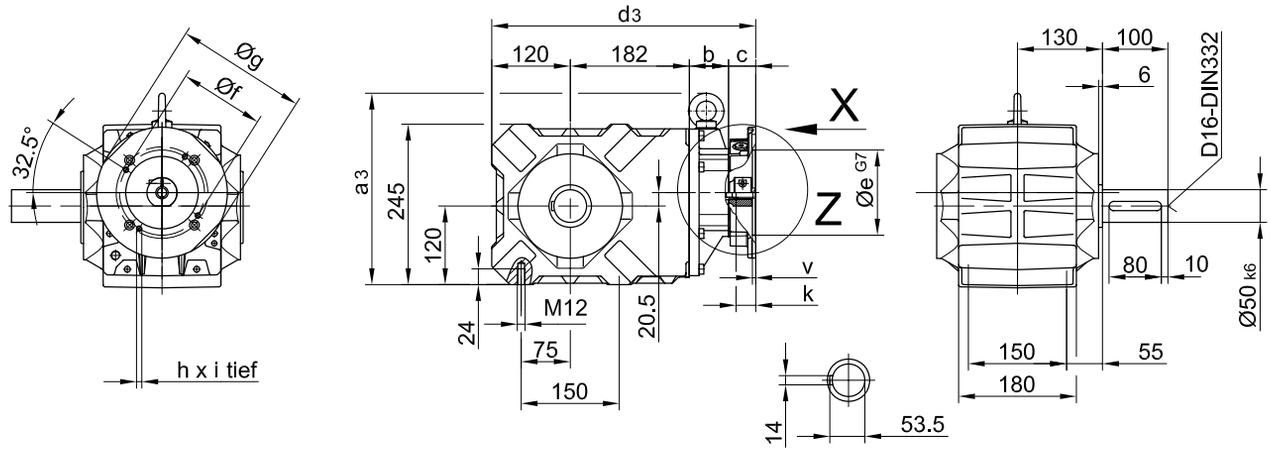

BS40-BS40Z-C-IEC Schneckengetriebe/ Fuss mit Gewindelöchern unten

Code -61U/

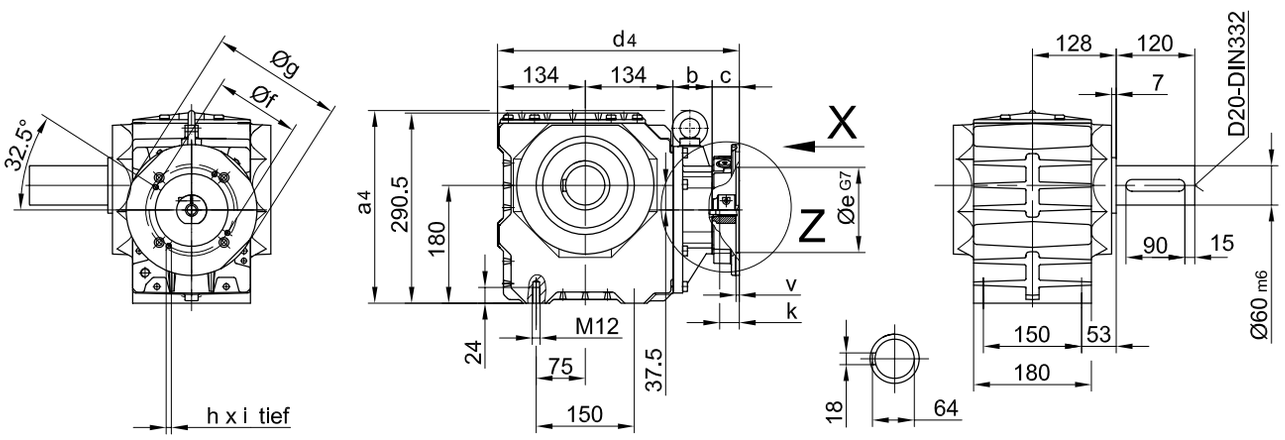

The actual gearbox design can vary from the geometry shown.

14

Input group

Dimensions of input group C/IEC

B.50-B.50Z-C/IEC

BG50-BG50Z-C-IEC Stirnradgetriebe/ Fussausführung mit Durchgangslöchern

Code -11/

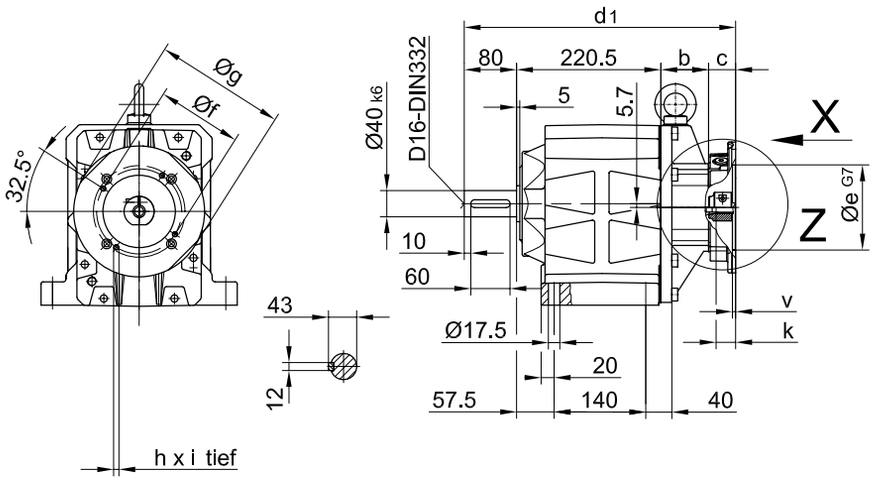

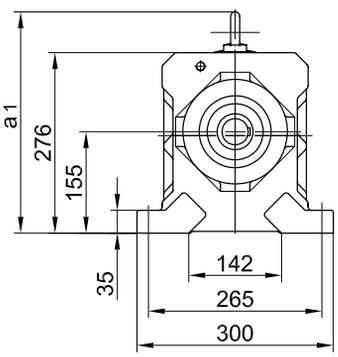

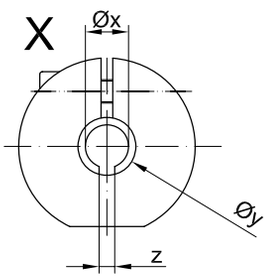

Getriebespezifische Masse bitte vom Standard Massbild entnehmen
Anschluss für Normmotoren konform EN 50347

	a_1	a_2	a_3	b	c	d_1	d_2	d_3
B.50Z-C-IEC63	338.1	529.8	359.8	155	39	494.5	371.5	555
B.50-C-IEC71	338.1	529.8	359.8	73	41.5	415	292	475.5
B.50Z-C-IEC71	338.1	529.8	359.8	159	41.5	501	378	561.5
B.50-C-IEC80	338.1	529.8	359.8	73	41.5	415	292	475.5
B.50Z-C-IEC80	338.1	529.8	359.8	159	41.5	501	378	561.5
B.50-C-IEC90	338.1	529.8	359.8	87.5	41.5	429.5	306.5	490
B.50Z-C-IEC90	338.1	529.8	359.8	173.5	41.5	515.5	392.5	576
B.50-C-IEC100/112	338.1	529.8	359.8	94	65	459.5	336.5	520
B.50-C-IEC132	338.1	529.8	359.8	107	75	482.5	359.5	543
B.50-C-IEC160	345.3	537	367	121	85	506.5	383.5	567

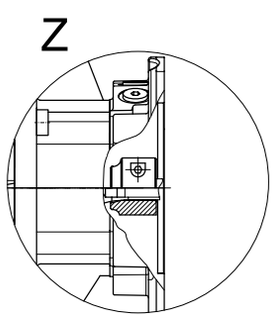

	e	f	g	h	i	k	v	x	y	z
B.50Z-C-IEC63	95	115	140	4xM8	16	23	4	11	14.8	4
B.50-C-IEC71	110	130	200	4xM8	16	30	5	14	18.9	5
B.50Z-C-IEC71	110	130	200	4xM8	16	30	5	14	18.9	5
B.50-C-IEC80	130	165	200	4xM10	20	40	7	19	25	6
B.50Z-C-IEC80	130	165	200	4xM10	20	40	7	19	25	6
B.50-C-IEC90	130	165	200	4xM10	20	50	5	24	31.5	8
B.50Z-C-IEC90	130	165	200	4xM10	20	50	5	24	31.5	8
B.50-C-IEC100/112	180	215	250	4xM12	24	60	5	28	35.3	8
B.50-C-IEC132	230	265	300	4xM12	24	80	5	38	45.5	10
B.50-C-IEC160	250	300	350	4xM16	32	110	6	42	49.9	12

The actual gearbox design can vary from the geometry shown.

B.50-B.50Z-C/IEC

BF50-BF50Z-C-IEC Flachgetriebe mit Drehmomentstütze

Code -04/

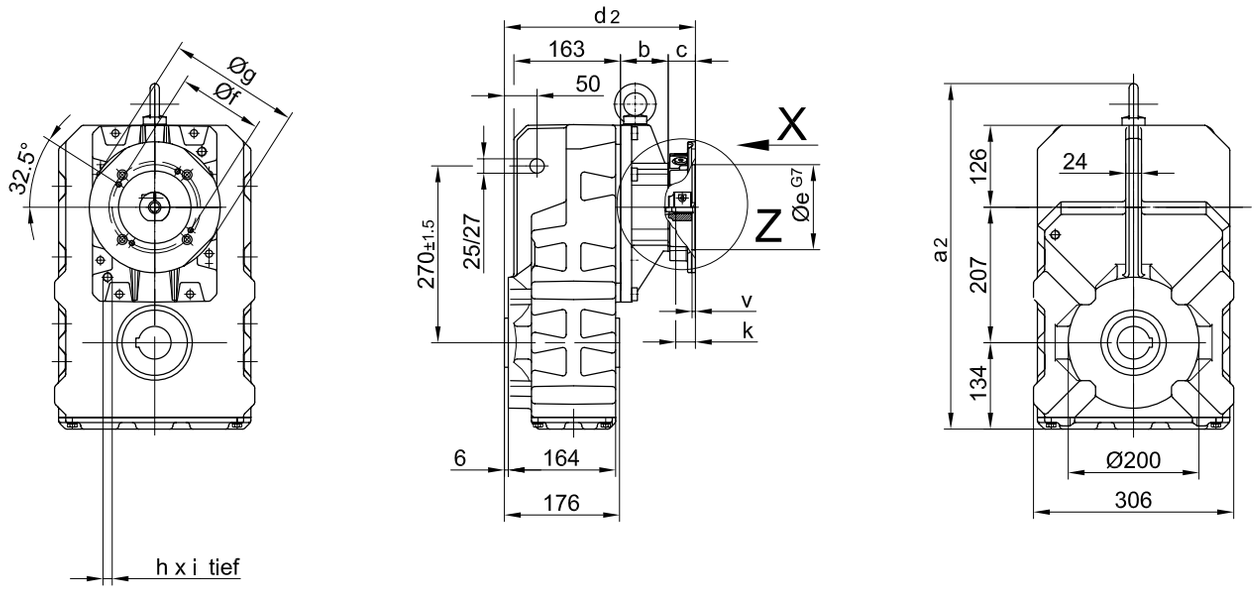

BK50-BK50Z-C-IEC Kegelradgetriebe/ Fuss mit Gewindelöchern unten

Code -61U/

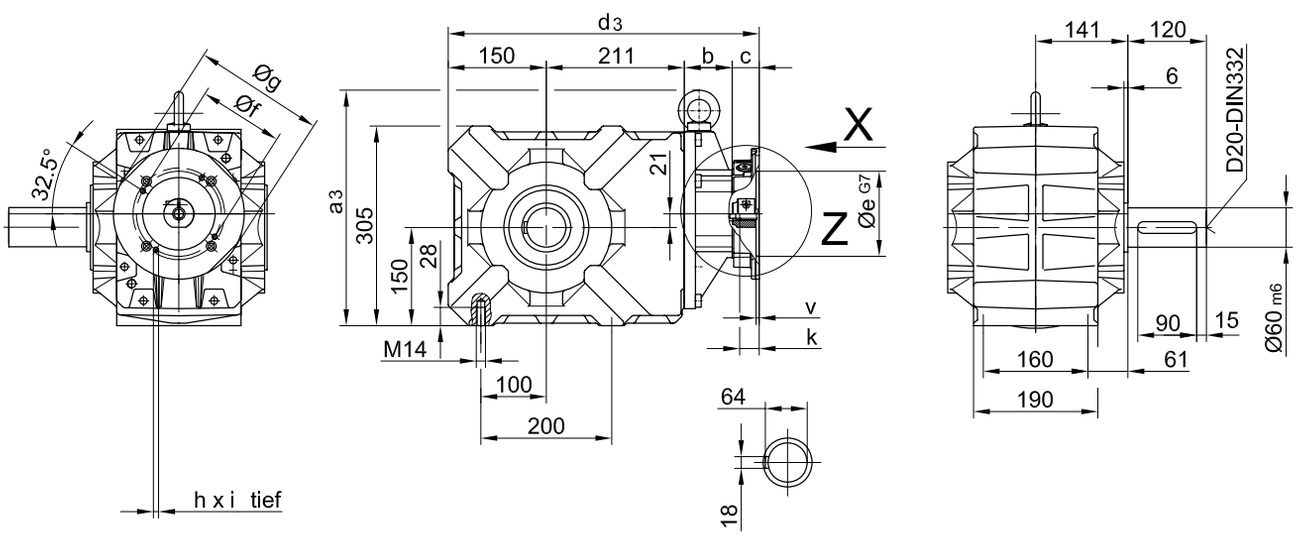

The actual gearbox design can vary from the geometry shown.

Input group

Dimensions of input group C/IEC

B.60-B.60Z-C/IEC

BG60-BG60Z-C-IEC Stirnradgetriebe/ Fussausführung mit Durchgangslöchern

Code -11/

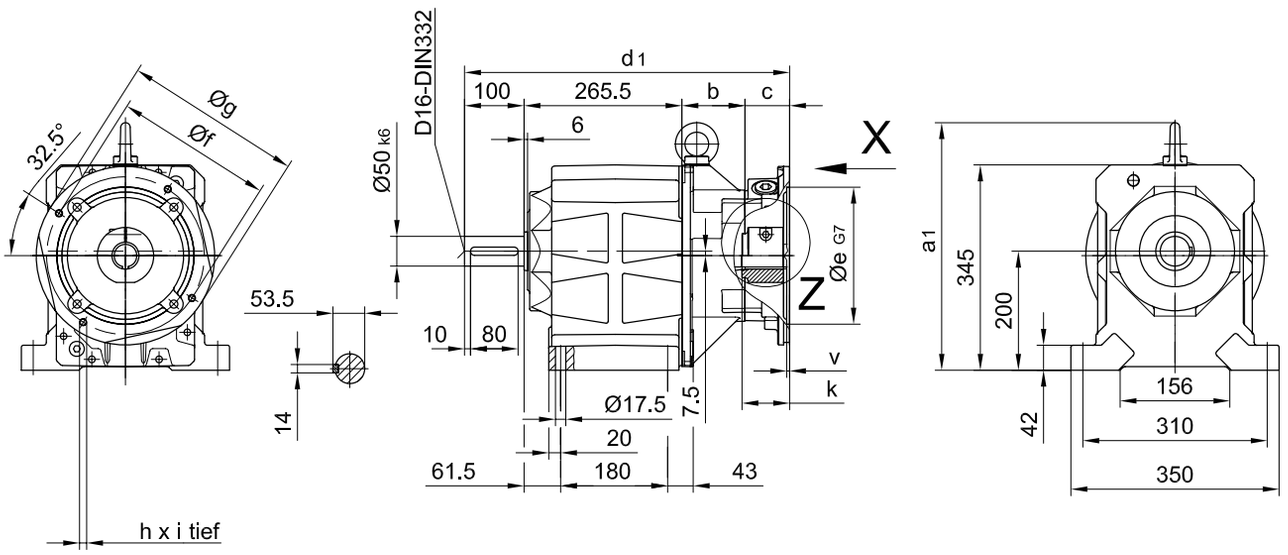

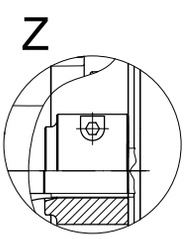

Getriebespezifische Masse bitte vom Standard Massbild entnehmen
Anschluss für Normmotoren konform EN 50347

	a_1	a_2	a_3	b	c	d_1	d_2	d_3
B.60Z-C-IEC71	416	640	410	181	41.5	588	427.5	554.5
B.60Z-C-IEC80	416	640	410	181	41.5	588	427.5	554.5
B.60-C-IEC90	416	640	410	85.5	41.5	492.5	332	459
B.60Z-C-IEC90	416	640	410	195.5	41.5	602.5	442	569
B.60-C-IEC100/112	416	640	410	92	65	522.5	362	489
B.60Z-C-IEC100/112	416	640	410	202	65	632.5	472	599
B.60-C-IEC132	416	640	410	105	75	545.5	385	512
B.60-C-IEC160	416	640	410	119	85	569.5	409	536

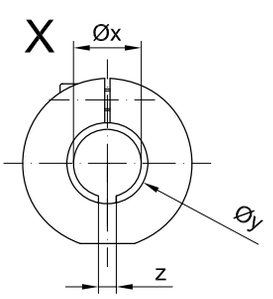

	e	f	g	h	i	k	v	x	y	z
B.60Z-C-IEC71	110	130	200	4xM8	16	30	5	14	18.9	5
B.60Z-C-IEC80	130	165	200	4xM10	20	40	7	19	25	6
B.60-C-IEC90	130	165	200	4xM10	20	50	5	24	31.5	8
B.60Z-C-IEC90	130	165	200	4xM10	20	50	5	24	31.5	8
B.60-C-IEC100/112	180	215	250	4xM12	24	60	5	28	35.3	8
B.60Z-C-IEC100/112	180	215	250	4xM12	24	60	5	28	35.3	8
B.60-C-IEC132	230	265	300	4xM12	24	80	5	38	45.5	10
B.60-C-IEC160	250	300	350	4xM16	32	110	6	42	49.9	12

The actual gearbox design can vary from the geometry shown.

B.60-B.60Z-C/IEC

BF60-BF60Z-C-IEC Flachgetriebe mit Drehmomentstütze

Code -04/

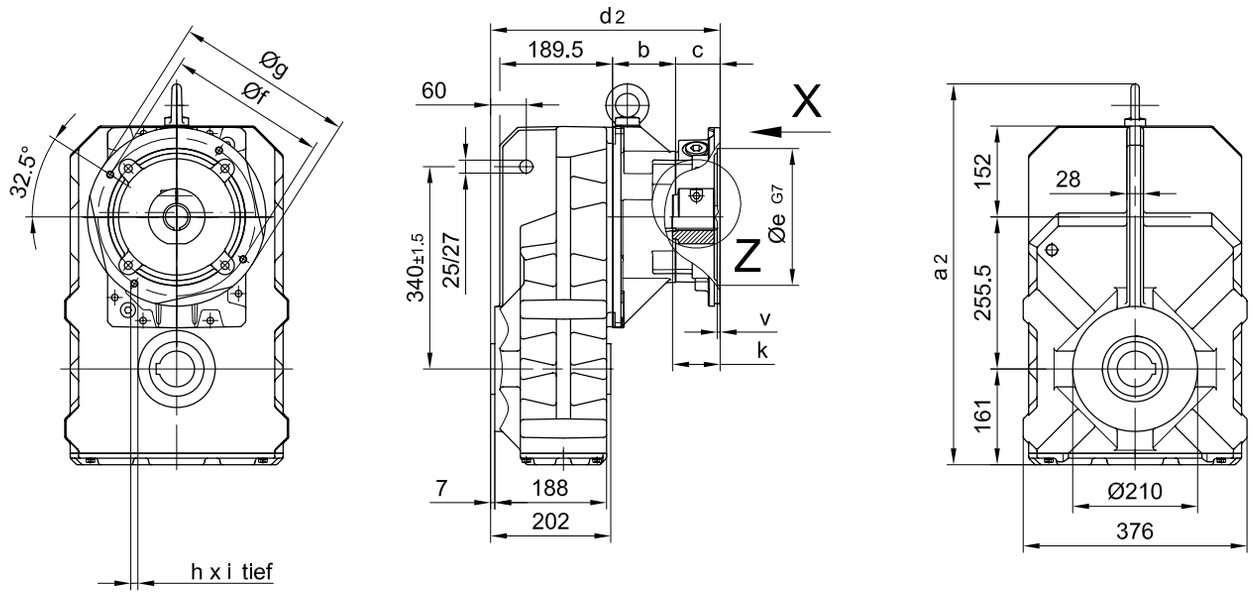

BK60-BK60Z-C-IEC Kegelradgetriebe/ Fuss mit Durchgangslöchern unten

Code -11U/

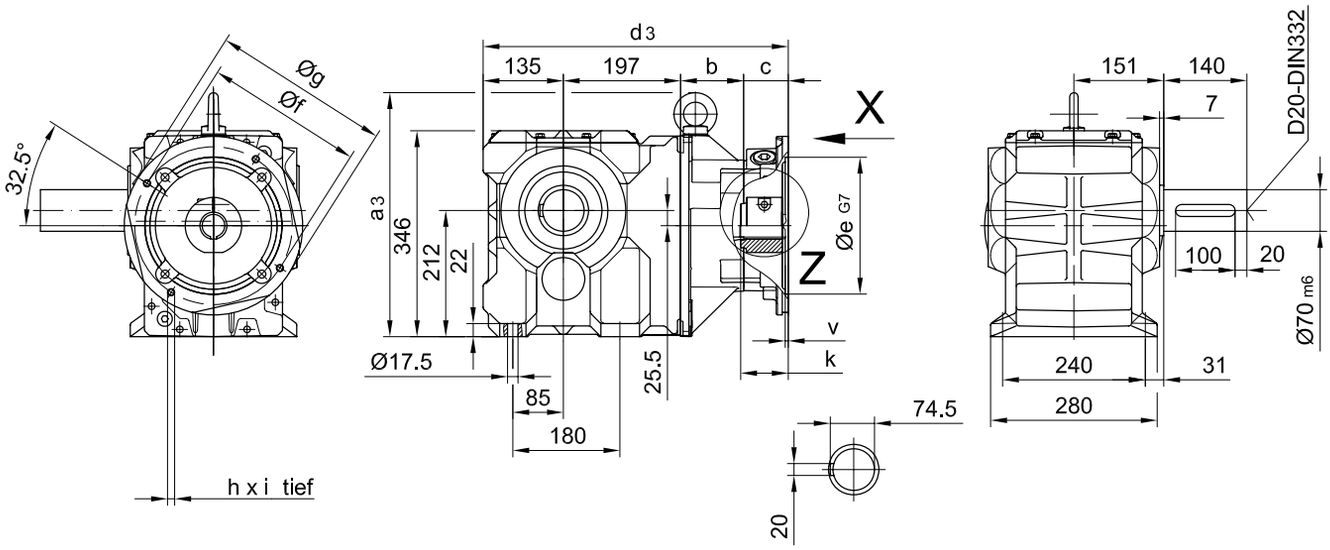

The actual gearbox design can vary from the geometry shown.

Input group

Dimensions of input group C/IEC

B.70-B.70Z-C/IEC

BG70-BG70Z-C-IEC Stirnradgetriebe/ Fussausführung mit Durchgangslöchern

Code -11/

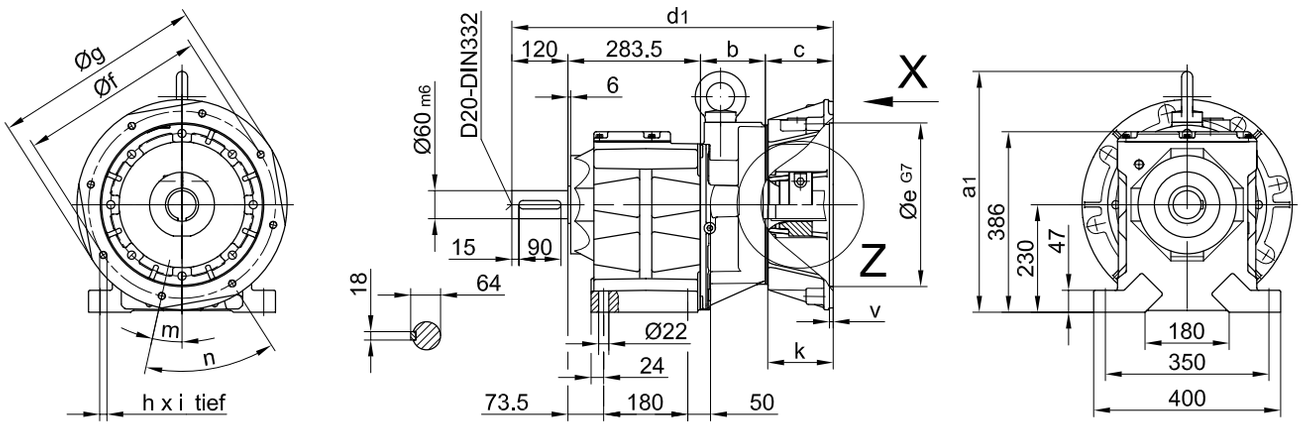

Getriebespezifische Masse bitte vom Standard Massbild entnehmen
Anschluss für Normmotoren konform EN 50347

	a_1	a_2	a_3	b	c	d_1	d_2	d_3
B.70Z-C-IEC71	453	737	451	202	41.5	647	489.5	643.5
B.70Z-C-IEC80	453	737	451	202	41.5	647	489.5	643.5
B.70-C-IEC90	453	737	451	83.5	41.5	528.5	371	525
B.70Z-C-IEC90	453	737	451	216.5	41.5	661.5	504	658
B.70-C-IEC100/112	453	737	451	90	65	558.5	401	555
B.70Z-C-IEC100/112	453	737	451	223	65	691.5	534	688
B.70-C-IEC132	453	737	451	103	75	581.5	424	578
B.70Z-C-IEC132	453	737	451	236	75	714.5	557	711
B.70-C-IEC160	453	737	451	117	85	605.5	448	602
B.70Z-C-IEC160	453	737	451	250	85	738.5	581	735
B.70-C-IEC180	453	737	451	139	110	652.5	495	649
B.70-C-IEC200	515	799	513	139	114	656.5	499	653
B.70-C-IEC225	515	799	513	139	145	687.5	530	684
B.70-C-IEC250	515	799	513	139	146	688.5	531	685
B.70-C-IEC280	515	799	513	139	146	688.5	531	685

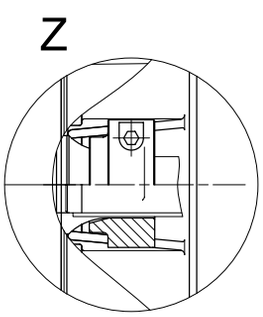

	e	f	g	h	i	k	m	n	v	x	y	z
B.70Z-C-IEC71	110	130	200	4xM8	16	30	32.5°	90°	5	14	18.9	5
B.70Z-C-IEC80	130	165	200	4xM10	20	40	32.5°	90°	7	19	25	6
B.70-C-IEC90	130	165	200	4xM10	20	50	32.5°	90°	5	24	31.5	8
B.70Z-C-IEC90	130	165	200	4xM10	20	50	32.5°	90°	5	24	31.5	8
B.70-C-IEC100/112	180	215	250	4xM12	24	60	32.5°	90°	5	28	35.3	8
B.70Z-C-IEC100/112	180	215	250	4xM12	24	60	32.5°	90°	5	28	35.3	8
B.70-C-IEC132	230	265	300	4xM12	24	80	32.5°	90°	5	38	45.5	10
B.70Z-C-IEC132	230	265	300	4xM12	24	80	32.5°	90°	5	38	45.5	10
B.70-C-IEC160	250	300	350	4xM16	32	110	32.5°	90°	6	42	49.9	12
B.70Z-C-IEC160	250	300	350	4xM16	32	110	32.5°	90°	6	42	49.9	12
B.70-C-IEC180	250	300	350	4xM16	32	110	32.5°	90°	8	48	57.2	14
B.70-C-IEC200	300	350	400	4xM16	32	110	42.5°	90°	10	55	65.5	16
B.70-C-IEC225	350	400	450	8xM16	32	140	22.5°	45°	8	60	71	18
B.70-C-IEC250	450	500	550	8xM16	32	140	22.5°	45°	8	65	75.5	18
B.70-IEC280	450	500	550	8xM16	32	140	22.5°	45°	8	75	87	20

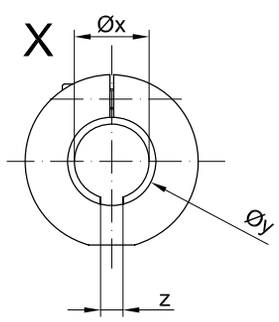

The actual gearbox design can vary from the geometry shown.

B.70-B.70Z-C/IEC

BF70-BF70Z-C-IEC Flachgetriebe mit Drehmomentstütze

Code -04/

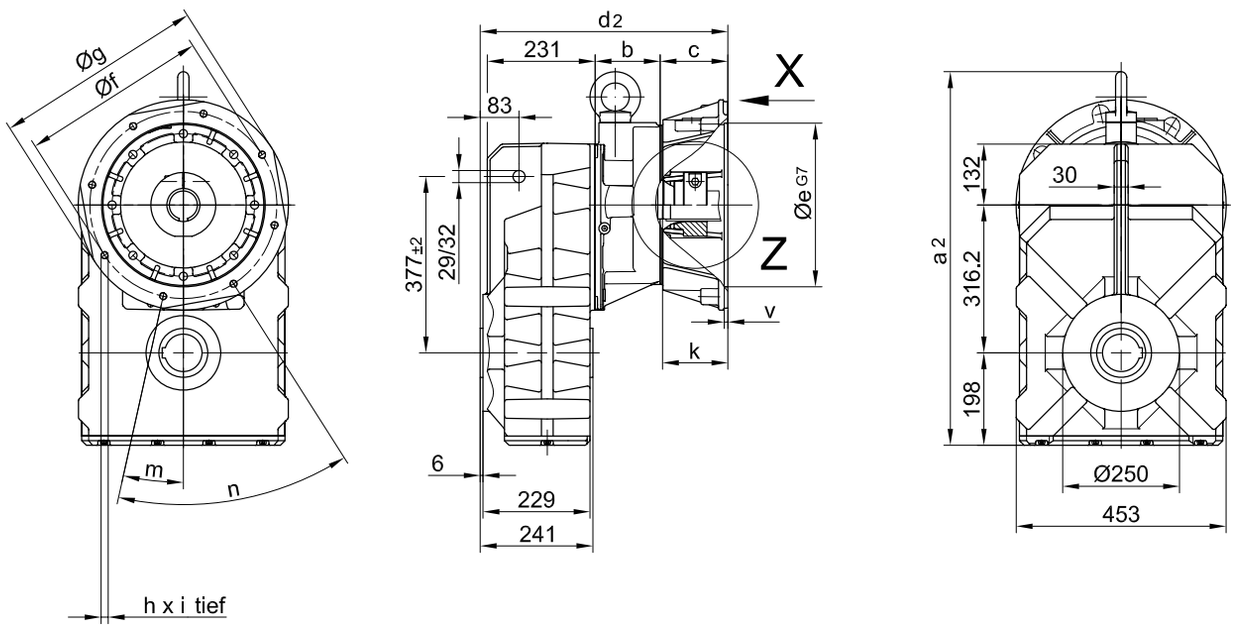

BK70-BK70Z-C-IEC Kegelradgetriebe/ Fuss mit Durchgangslöchern unten

Code -11U/

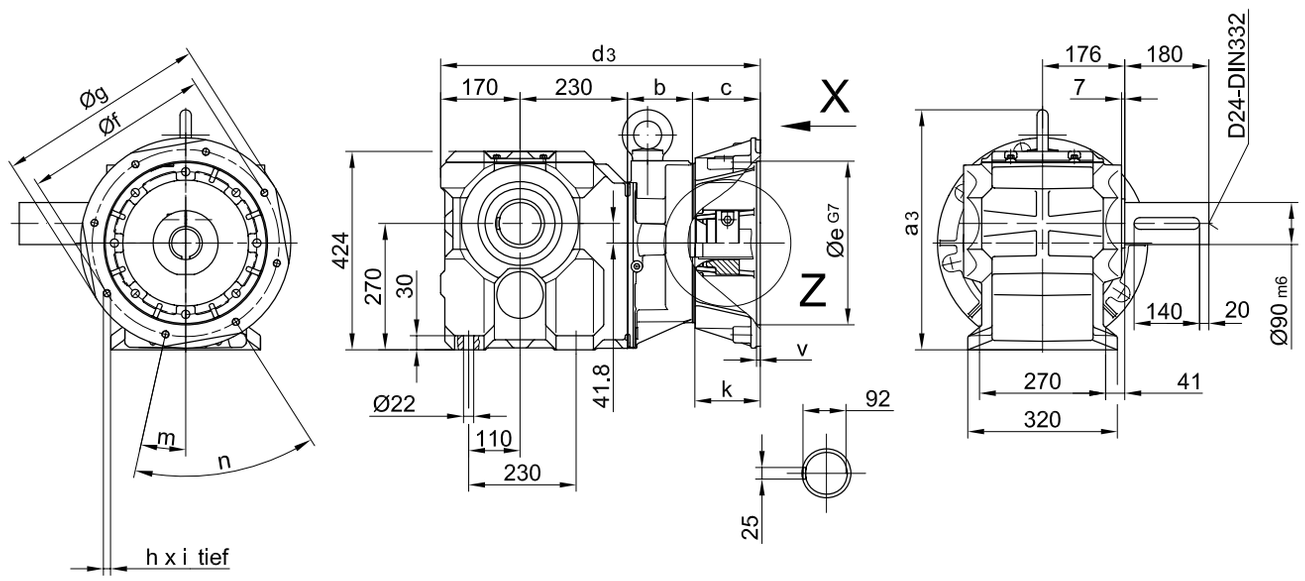

14

The actual gearbox design can vary from the geometry shown.

Input group

Dimensions of input group C/IEC

B.80-B.80Z-C/IEC

BG80-BG80Z-C-IEC Stirnradgetriebe/ Fussausführung mit Durchgangslöchern

Code -11/

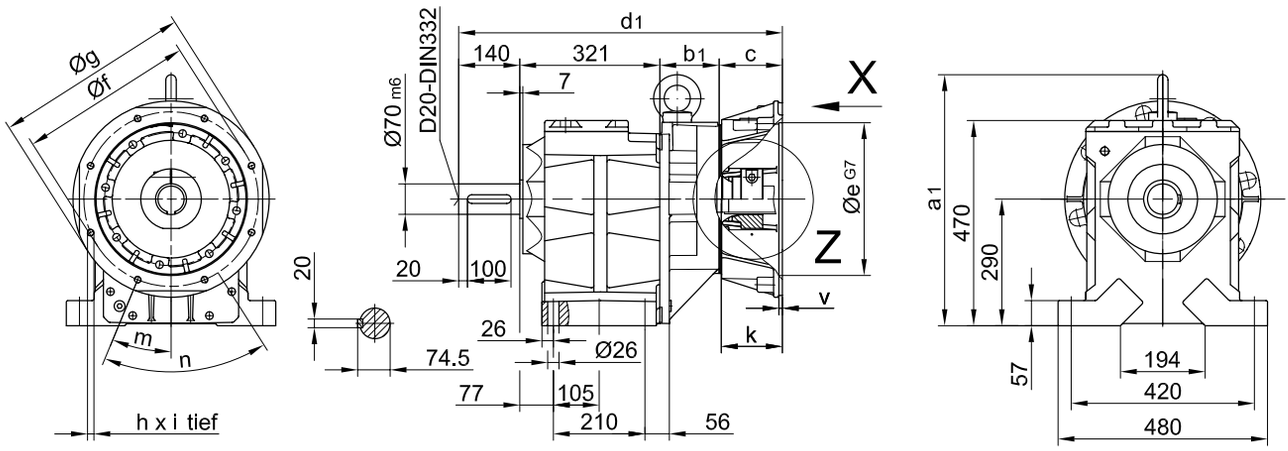

Getriebespezifische Masse bitte vom Standard Massbild entnehmen
Anschluss für Normmotoren konform EN 50347

	a_1	a_2	a_3	b_1	b_2	c	d_1	d_2	d_3
B.80-C-IEC90	-	813	-	-	83.5	41.5	-	465,5	-
B.80Z-C-IEC90	553	813	551	252.5	214.5	41.5	755	594.5	777
B.80-C-IEC100	553	813	551	87	90	65	613	495.5	635
B.80Z-C-IEC100	553	813	551	259	219	65	785	624.5	807
B.80-C-IEC112	553	813	551	87	90	65	613	495.5	635
B.80Z-C-IEC112	553	813	551	259	219	65	785	624.5	807
B.80-C-IEC132	553	813	551	100	103	75	636	518.5	658
B.80Z-C-IEC132	553	813	551	272	232	75	808	647.5	830
B.80-C-IEC160	553	813	551	114	117	85	660	542.5	682
B.80Z-C-IEC160	553	813	551	286	246	85	832	671.5	854
B.80-C-IEC180	553	811	551	136	139	110	707	589.5	729
B.80-C-IEC200	575	875	573	136	139	114	711	593,5	733
B.80-C-IEC225	575	875	573	136	139	145	742	624.5	764
B.80-C-IEC250	575	875	573	136	139	146	743	625.5	765
B.80-C-IEC280	575	875	573	136	139	146	743	625.5	765

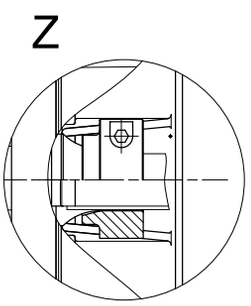

	e	f	g	h	i	k	m	n	v	x	y	z
B.80-C-IEC90	130	165	200	4xM10	20	50	32.5°	90°	5	24	31.5	8
B.80Z-C-IEC90	130	165	200	4xM10	20	50	32.5°	90°	5	24	31.5	8
B.80-C-IEC100	180	215	250	4xM12	24	60	32.5°	90°	5	28	35.3	8
B.80Z-C-IEC100	180	215	250	4xM12	24	60	32.5°	90°	5	28	35.3	8
B.80-C-IEC112	180	215	250	4xM12	24	60	32.5°	90°	5	28	35.3	8
B.80Z-C-IEC112	180	215	250	4xM12	24	60	32.5°	90°	5	28	35.3	8
B.80-C-IEC132	230	265	300	4xM12	24	80	32.5°	90°	5	38	45.5	10
B.80Z-C-IEC132	230	265	300	4xM12	24	80	32.5°	90°	5	38	45.5	10
B.80-C-IEC160	250	300	350	4xM16	32	110	32.5°	90°	6	42	49.9	12
B.80Z-C-IEC160	250	300	350	4xM16	32	110	32.5°	90°	6	42	49.9	12
B.80-C-IEC180	250	300	350	4xM16	32	110	32.5°	90°	8	48	57.2	14
B.80-C-IEC200	300	350	400	4xM16	32	110	42.5°	90°	10	55	65.5	16
B.80-C-IEC225	350	400	450	8xM16	32	140	22.5°	45°	8	60	71	18
B.80-C-IEC250	450	500	550	8xM16	32	140	22.5°	45°	8	65	75.5	18
B.80-C-IEC280	450	500	550	8xM16	32	140	22.5°	45°	8	75	87	20

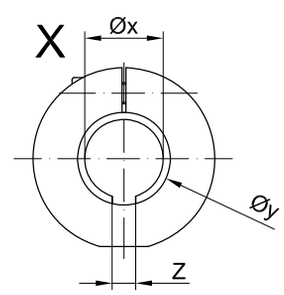

The actual gearbox design can vary from the geometry shown.

B.80-B.80Z-C/IEC

BF80-BF80Z-C-IEC Flachgetriebe mit Drehmomentstütze

Code -04/

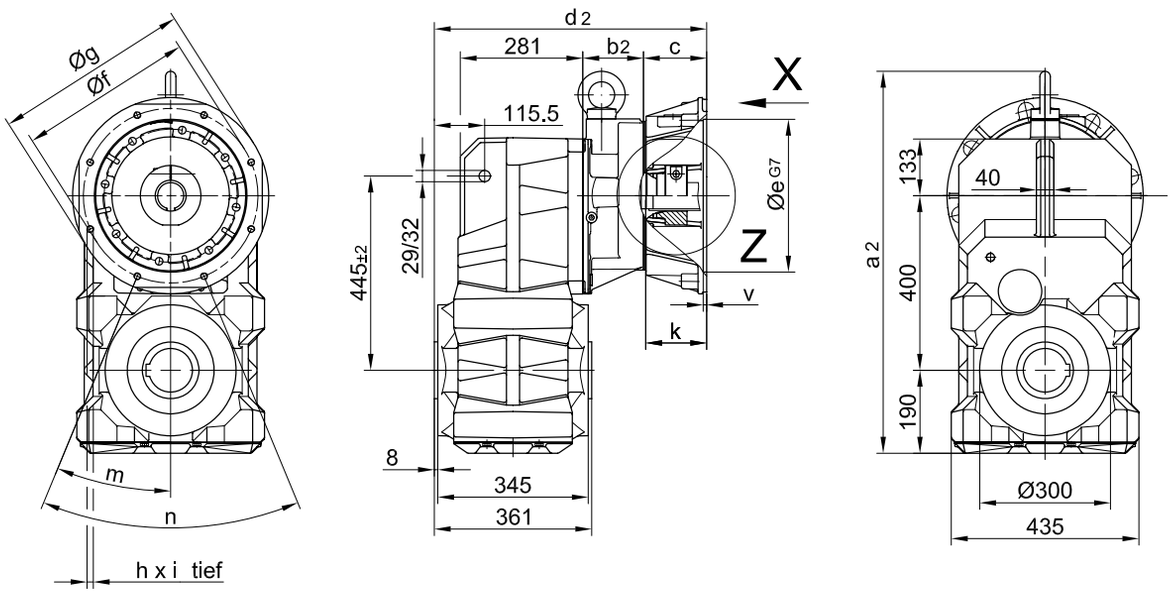

BK80-BK80Z-C-IEC Kegelradgetriebe/ Fuss mit Durchgangslöchern unten

Code -11U/

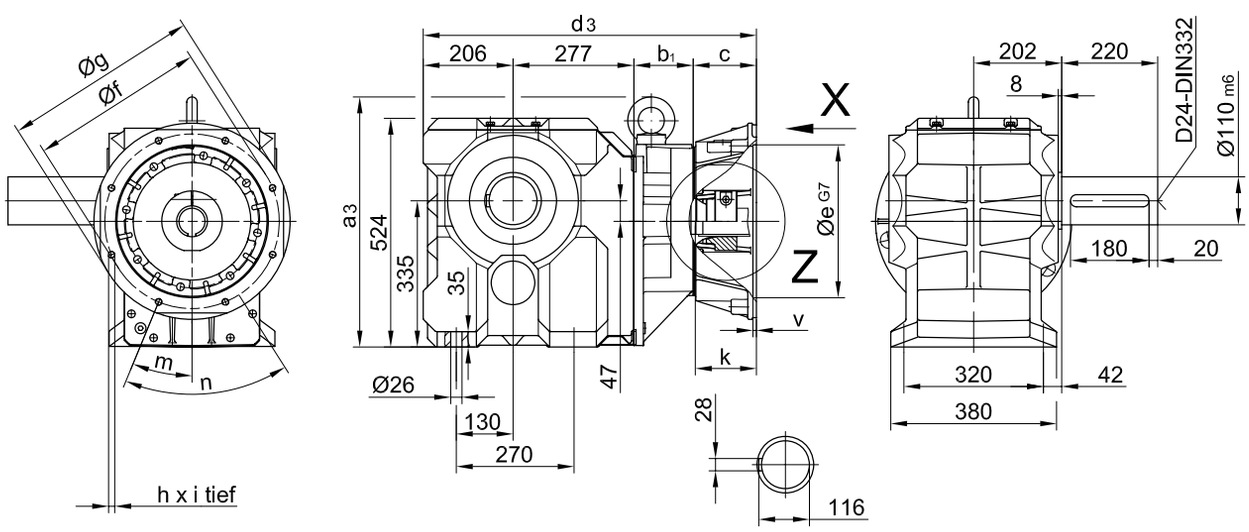

The actual gearbox design can vary from the geometry shown.

Input group

Dimensions of input group C/IEC

B.90-B.90Z-C/IEC

BG90-BG90Z-C-IEC Stirnradgetriebe/ Fussausführung mit Durchgangslöchern

Code -11/

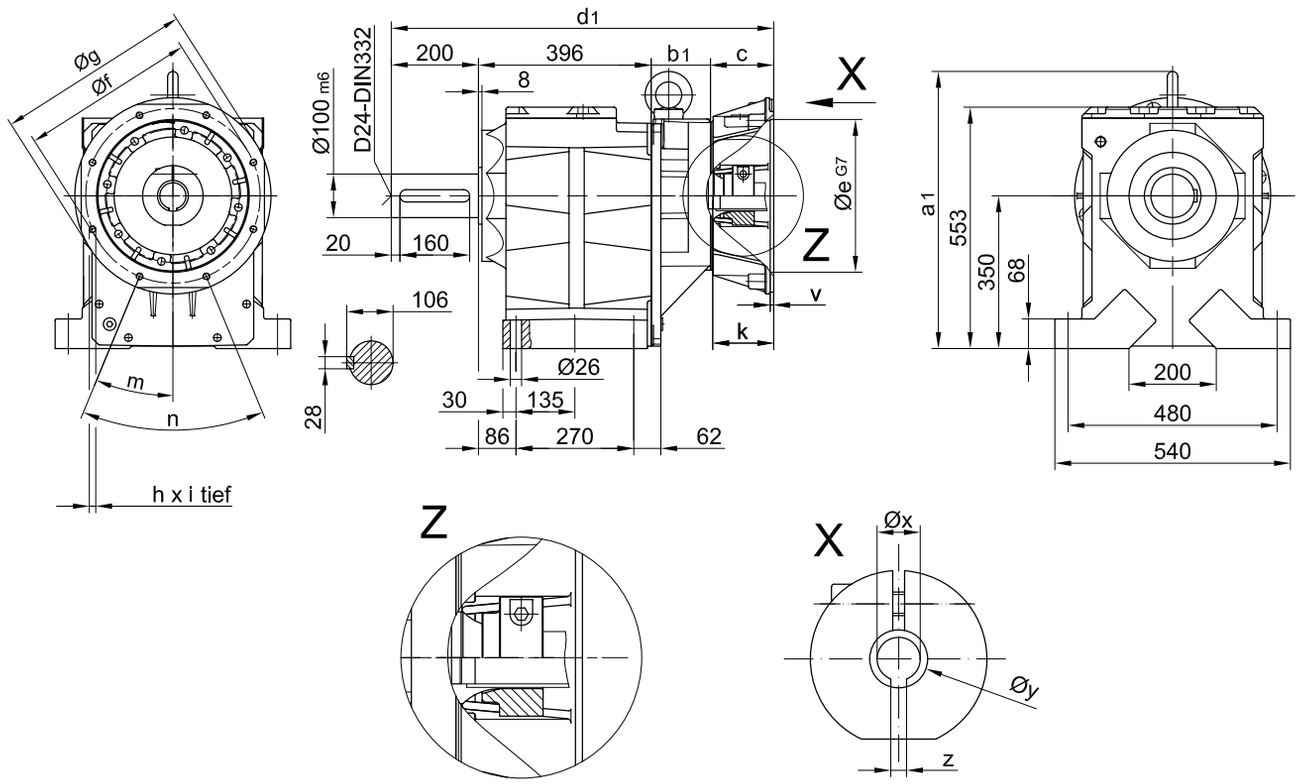

Getriebespezifische Masse bitte vom Standard Massbild entnehmen
Anschluss für Normmotoren konform EN 50347

	a_1	a_2	b_1	b_2	c	d_1	d_2	d_3	e	f	g	h	i	k	m	n	v	x	y	z
B.90Z-C-IEC90	629	988	267	250.5	41.5	904.5	698	909.5	130	165	200	4xM10	20	50	32.5°	90°	5	24	35.3	8
B.90-C-IEC100/112	-	988	-	87	65	-	558	-	180	215	250	4xM12	24	60	32.5°	90°	5	28	35.3	8
B.90Z-C-IEC100/112	629	988	273.5	254	65	934.5	725	939.5	180	215	250	4xM12	24	60	32.5°	90°	5	28	35.3	8
B.90-C-IEC132	629	988	100	100	75	771	581	776	230	265	300	4xM12	24	80	32.5°	90°	5	38	45.5	10
B.90Z-C-IEC132	629	988	283.5	272	75	954.5	753	959.5	230	265	300	4xM12	24	80	32.5°	90°	5	38	45.5	10
B.90-C-IEC160	629	988	114	114	85	795	605	800	250	300	350	4xM16	32	110	32.5°	90°	6	42	49.9	12
B.90Z-C-IEC160	629	988	297.5	286	85	978.5	777	983.5	250	300	350	4xM16	32	110	32.5°	90°	6	42	49.9	12
B.90-C-IEC180	629	988	136	136	110	842	652	847	250	300	350	4xM16	32	110	32.5°	90°	8	48	57.2	14
B.90Z-C-IEC180	629	-	319.5	-	110	1025.5	-	1030.5	250	300	350	4xM16	32	110	32.5°	90°	8	48	57.2	14
B.90-C-IEC200	635	1008	136	136	114	846	656	851	300	350	400	4xM16	32	110	42.5°	90°	10	55	65.5	16
B.90Z-C-IEC200	629	-	319.5	-	114	1029.5	-	1034.5	300	350	400	4xM16	32	110	42.5°	90°	10	55	65.5	16
B.90-C-IEC225	635	1008	136	136	145	877	687	882	350	400	450	8xM16	32	140	22.5°	45°	8	60	71	18
B.90Z-C-IEC225	629	-	319.5	-	145	1060.5	-	1065.5	350	400	450	8xM16	32	140	22.5°	45°	8	60	71	18
B.90-C-IEC250	635	1008	136	136	146	878	688	883	450	500	550	8xM16	32	140	22.5°	45°	8	65	75.5	18
B.90Z-C-IEC250	629	-	319.5	-	146	1061.5	-	1066.5	450	500	550	8xM16	32	140	22.5°	45°	8	65	75.5	18
B.90-C-IEC280	635	1008	136	136	146	878	688	883	450	500	550	8xM16	32	140	22.5°	45°	8	75	87	20
B.90Z-IEC280	629	-	319.5	-	146	1061.5	-	1066.5	450	500	550	8xM16	32	140	22.5°	45°	8	75	87	20

The actual gearbox design can vary from the geometry shown.

B.90-B.90Z-C/IEC

BF90-BF90Z-C-IEC Flachgetriebe mit Drehmomentstütze

Code -04/

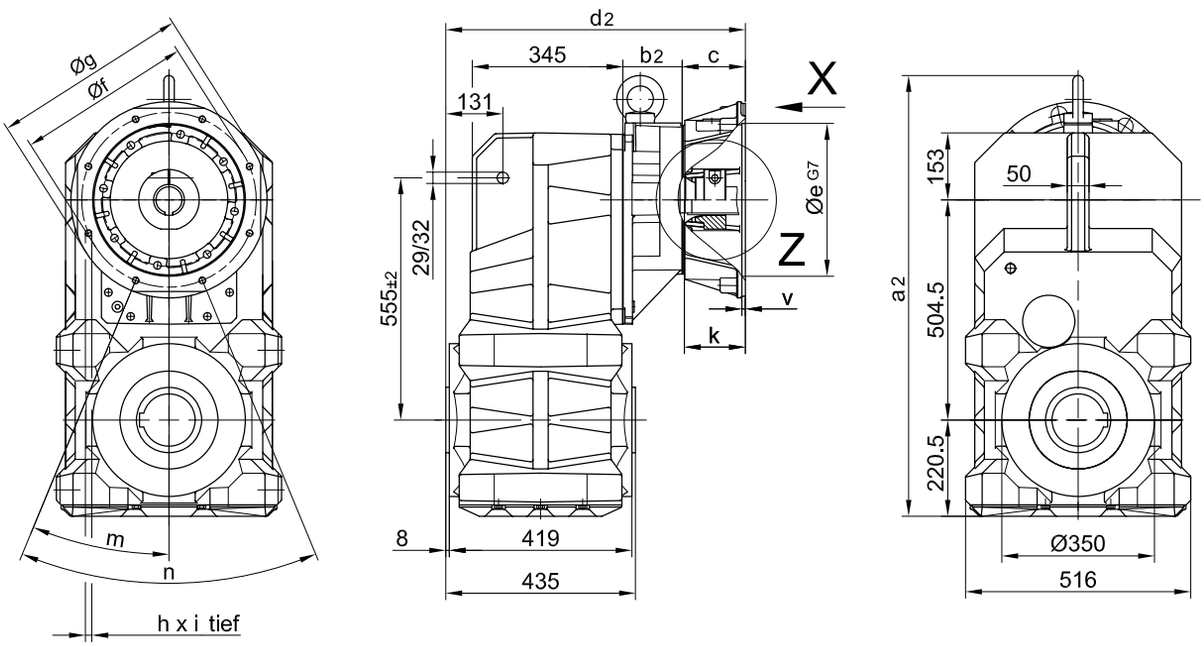

BK90-BK90Z-C-IEC Kegelradgetriebe/ Fuss mit Durchgangslöchern unten

Code -11U/

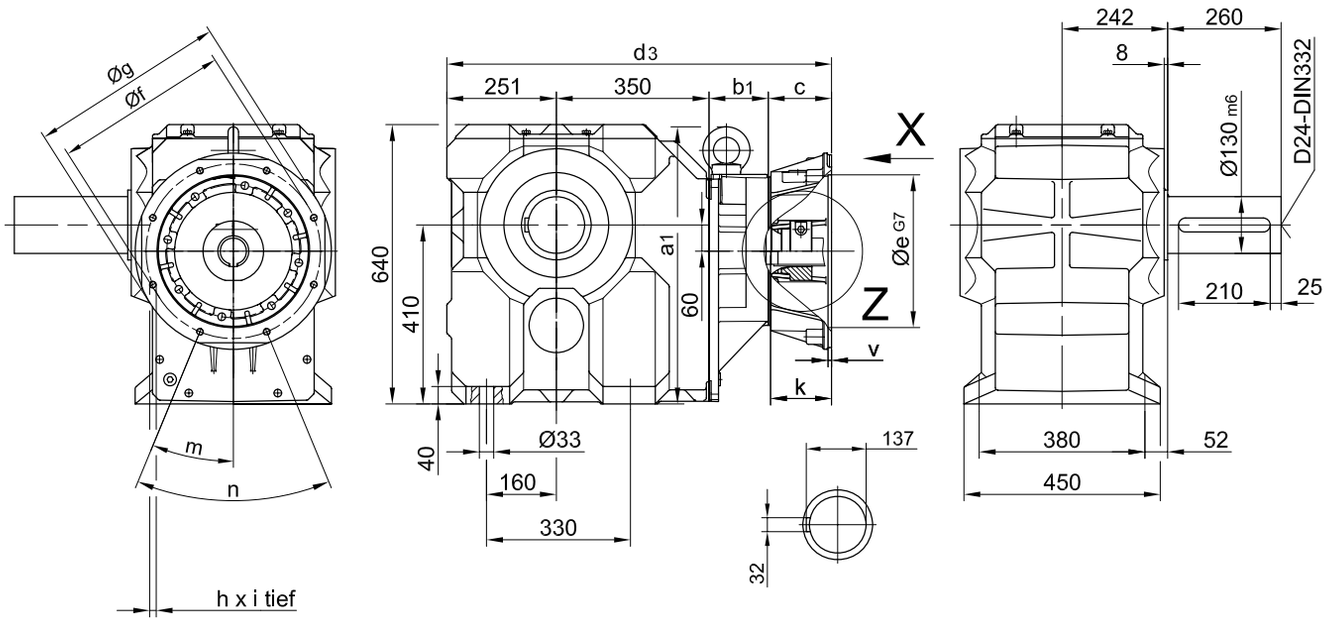

The actual gearbox design can vary from the geometry shown.

Input group

Dimensions of input group C/IEC

B.100-B.100Z-C/IEC

BG100-BG100Z-C-IEC Stirnradgetriebe/ Fussausführung mit Durchgangslöchern

Code -11/

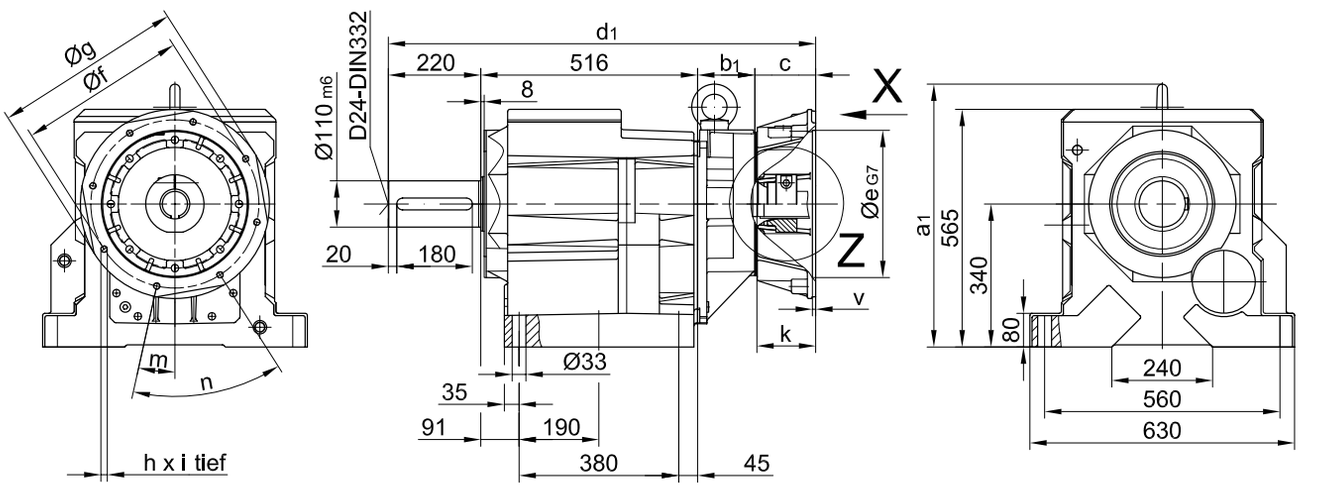

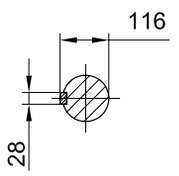

Getriebespezifische Masse bitte vom Standard Massbild entnehmen
Anschluss für Normmotoren konform EN 50347

	a_1	b_1	c	d_1
B.100Z-C-IEC90	621	252.5	41.5	1030
B.100-C-IEC100/112	603	87	65	888
B.100Z-C-IEC100/112	621	259	65	1060
B.100-C-IEC132	603	100	75	911
B.100Z-C-IEC132	621	272	75	1083
B.100-C-IEC160	603	114	85	935
B.100Z-C-IEC160	621	286	85	1107
B.100-C-IEC180	603	136	110	982
B.100-C-IEC200	625	136	114	986
B.100-C-IEC225	625	136	145	1017
B.100-C-IEC250	625	136	146	1018
B.100-C-IEC280	625	136	146	1018

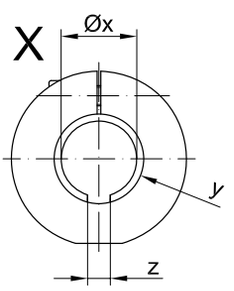

	e	f	g	h	i	k	m	n	v	x	y	z
B.100Z-C-IEC90	130	165	200	4xM10	20	50	32.5°	90°	5	24	35.3	8
B.100-C-IEC100/112	180	215	250	4xM12	24	60	32.5°	90°	5	28	35.3	8
B.100Z-C-IEC100/112	180	215	250	4xM12	24	60	32.5°	90°	5	28	35.3	8
B.100-C-IEC132	230	265	300	4xM12	24	80	32.5°	90°	5	38	45.5	10
B.100Z-C-IEC132	230	265	300	4xM12	24	80	32.5°	90°	5	38	45.5	10
B.100-C-IEC160	250	300	350	4xM16	32	110	32.5°	90°	6	42	49.9	12
B.100Z-C-IEC160	250	300	350	4xM16	32	110	32.5°	90°	6	42	49.9	12
B.100-C-IEC180	250	300	350	4xM16	32	110	32.5°	90°	8	48	57.2	14
B.100-C-IEC200	300	350	400	4xM16	32	110	42.5°	90°	10	55	65.5	16
B.100-C-IEC225	350	400	450	8xM16	32	140	22.5°	45°	8	60	71	18
B.100-C-IEC250	450	500	550	8xM16	32	140	22.5°	45°	8	65	75.5	18
B.100-C-IEC280	450	500	550	8xM16	32	140	22.5°	45°	8	75	87	20

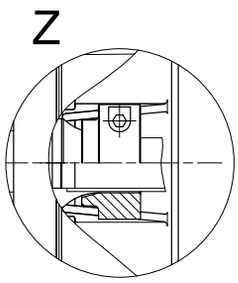

The actual gearbox design can vary from the geometry shown.

15

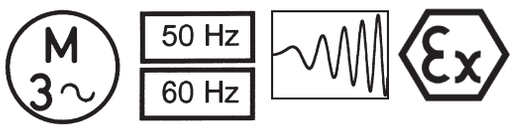

	Page
Motors	**675-726**

General
Duty Cycles acc. to DIN EN 60034
Technical data of the 50 Hz motors
Technical data of the 60 Hz motors
Operation with frequency converter
Explosion protection

ErP Directive 2009/125/EC

Directive 2009/125/EC of the European Parliament and the Council, issued in 2009, specifies requirements for the environmentally responsible design of energy-related products (ErPs). In November 2009 it superseded Directive 2005/32/EC, which formed the framework for requirements for the environmentally responsible design of energy-using products (EuPs). This change has no effect on already proclaimed implementation measures.
From 16 June 2011 onward, new motors or geared motors marketed in the EU must comply with the requirements of **energy efficiency class IE2**. **From 1 January 2015 onward, motors with rated outputs from 7.5 to 375 kW** destined for the European market must comply with **energy efficiency class IE3**, and **from 1 January 2017 onward this requirement also applies to smaller motors rated at 0.75 kW or more.**

Objectives
The ErP Directive has several objectives:

1. **Mitigating the environmental impact of energy-using products**
   This objective is intended to be achieved by the documentation and labelling of products, by regulations for inspection, and by the formulation of individual requirements in implementation measures. As the entire product life cycle is taken into consideration, action must be taken as early as the design phase.

2. **Climate protection**
   Achievement of the EU climate protection objectives is to be supported. This can be implemented by reducing energy consumption and the emission of global warming gasses in the production, operation and disposal of energy-using products.

3. **Harmonised legislation**
   The directive creates a framework for the European regulation of environmental design requirements. This avoids trade impediments resulting from differences in national regulations. This can be achieved by means of the proclamation of legally binding implementation measures for the entire Community and protection of free trade in goods against further-reaching regulations of the Member States.

The new IEC 60034-30 standard

Three-phase motors were previously classified in the EFF1, EFF2 and EFF3 efficiency classes. However, the various national schemes differ in terms of scope and classes. This prompted the IEC to develop a uniform international standard for the efficiency of electric motors. The new IEC 600034-30 standard provides internationally harmonised definitions of the efficiency classes IE1, IE2 and IE3 for three-phase motors.

The new designations are specified as follows:

Efficiency class designation		**Comparison with CEMEP classification**	
Efficiency	**Code**	**Efficiency**	**Logo**
Super Premium	**IE4**	**-**	**-**
Premium	**IE3**	**-**	**-**
High	**IE2**	**High**	EFF 1
Standard	**IE1**	**Improved**	EFF 2
Lower than Standard	**No designation**	**Standard**	EFF 3

Motors subject to the ErP Directive as specified by the Electric Motors Regulation 640/2009/EC

The new Electric Motors Regulation has a broader scope than the standard previously used in Europe.

- → Single-speed, three-phase, 50 Hz and 60 Hz
- → 2-, 4- or 6-pole motors
- → Rated output from 0.75 to 375 kW
- → Rated voltage up to 1000 V
- → Duty type S1 (continuous running)
- → For operation directly from the mains (50 Hz or 60 Hz)
- → For Design N motors complying with IEC 60034-12
- → For operating conditions complying with IEC 60034-1 Section 6 (dimensioned for operating conditions at the installation site, elevation 1000 m, ambient temperature -15 °C to +40 °C)
- → Motors with two switchable rated voltages, under the condition that the magnetic flux is the same with both voltages
- → Geared motors

Motors excluded from regulation

- → Motors exclusively manufactured for converter operation in accordance with IEC 60034-25
- → Pole-changing motors
- → Motors fully integrated into a machine (such as pumps, fans and compressors) that cannot be tested separately from the machine
- → From 16 June 2011 onward: IE1 motors for S1 duty destined for the European market
- → Explosion-proof motors (explosion protection has higher priority)
- → Brake motors

Method for determining motor efficiency according to IEC 60034-2-1

Individual loss method
Additional losses using the residual loss method
Low measurement uncertainty

Bauer geared motors for connection to three-phase supply are supplied with specially designed induction motors. This design ensures maximum operating safety with high breakaway torque and minimum starting current.

The torque/speed characteristic is largely free of torque dips. Torque is optimised to suit requirements and application parameters. See Bauer special imprint SD4 for more information

Torques

The torques as stated in the selection tables are fully available at the output shaft. These figures apply for continuous operation (S1-100%) at a maximum ambient temperature of 40° C and at site elevations up to 1000 m above sea level. Drives for higher ambient temperatures and site elevations are available on request. Gear efficiencies, which are lower than the usual values for spur gears, are taken into account in the torques listed in the selection tables.

Line voltages

BAUER motors are available as standard for the following three-phase line voltages:

Motor size	Standard voltages:
D04LA4 - D09XA4	220 V Δ/ 380 V Y 50 Hz
0,06 - 2,2 kW	230 V Δ/**400 V Y 50 Hz* (anm-iec38)**
	240 V Δ / 415 V Y 50 Hz**
	440 V Y / 60 Hz 460 V Y / 60 Hz
from D11SA4	220 V Δ/ 380 V Y 50 Hz
from 3,0 kW	230 V Δ/ 400 V Y 50 Hz
	240 V Δ/ 415 V Y 50 Hz**
	440 V Y / 60 Hz460 V Y / 60 Hz
	380 V Δ/ 660 V Y 50 Hz
	400 V Δ/ 690 V Y**50 Hz***
	415 V Δ / 50 Hz**
	440 V Δ/ 60 Hz
	460 V Δ/ 60 Hz

*Voltage recommended world-wide by IEC 38 and in Europe by CENELEC.
**= Insulation Class F is necessary.

Designs for other voltages available on request and at extra cost.

Unless otherwise specified, motors for operation in conjunction with frequency converters with a 50 or 60 Hz frequency have a Y-circuit to optimise operating noise and winding load.

Unless otherwise stated, the tolerance for the rated voltage is +/- 5 %, in accordance with IEC 60034-1.

The D04 to D18 motors in 4 pole design can be operated within a tolerance of +/- 10 % of the rated voltage (400 V 50 Hz).

ine frequencies

All motors are available with the same power ratings for either 50 or 60 Hz . Increased power models are available on request.

Rating plate

Bauer geared motors are supplied with a corrosion-proof rating plate as standard. The standard rating plate is made of special plastic tried and tested in many years of practical use and approved for hazardous areas by the Physikalisch-Technische-Bundesanstalt (PTB).

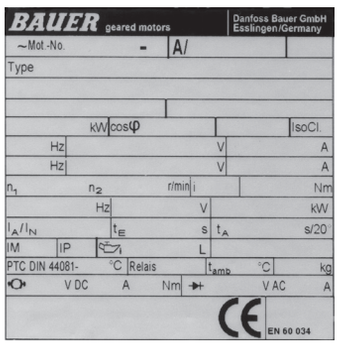

Terminal box

The cables of motors with and without brakes can be introduced into the motor terminal box from side A or side C.

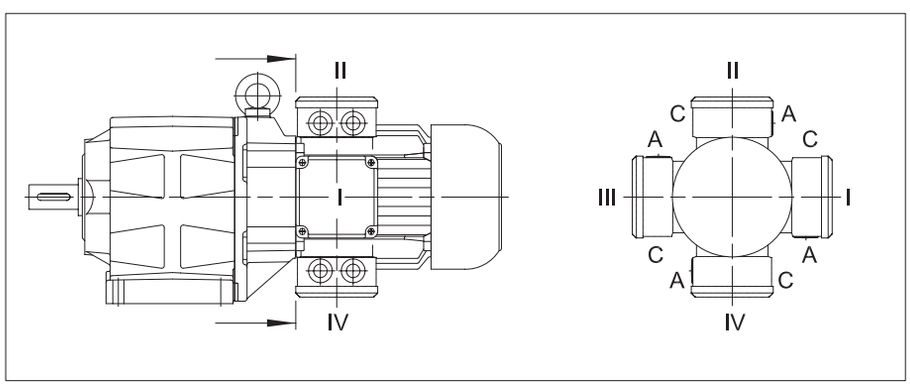

The standard position for the motor terminal box is shown in the dimensional drawings for the geared motors (see chapter 10,11,12 and 13). The terminal box can be installed at any of 3 other positions on request, if on-site space is restricted. The 4 possible positions are 90° offsets around the axis of the motor (dimensional drawing and designation for standard terminal box, see chapter 17 “Dimensional drawing standard terminal box”).

Cast-on terminal boxes (KAG) are supplied with knock out entries with metric nut for cable gland. Screw- on terminal boxes (TBI...4 are supplied with a metric screw thread as standard.

Motor connections

The electrical connection of gear motors is time consuming and creates costs, which cannot be neglected both during initial installation and in service cases. These costs are reduced considerably by the use of BAUER Gear Motors, have CAGE CLAMP® connection technology instead of the conventional terminal block – and that without extra charge.

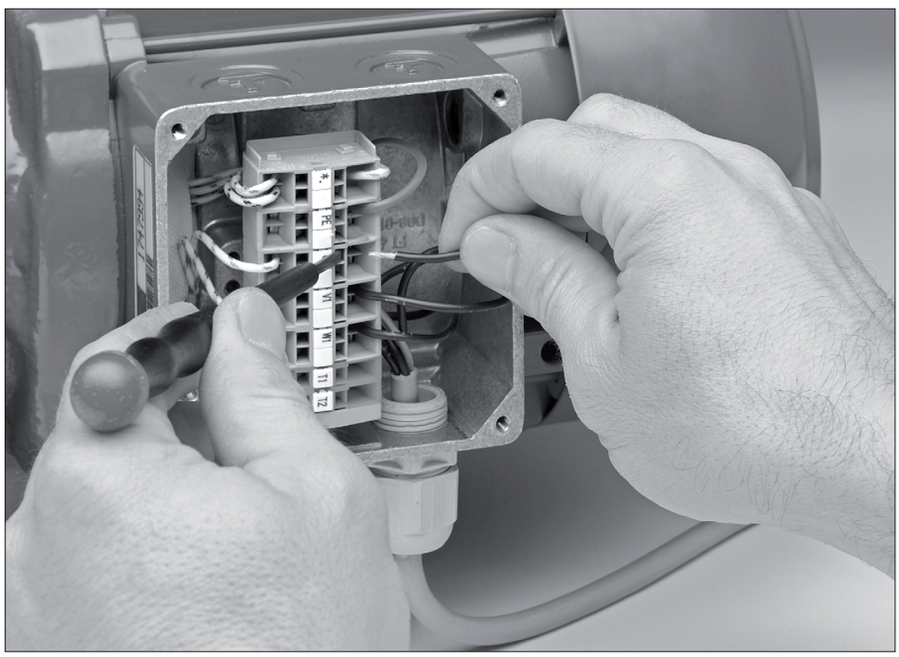

What are the advantages for you ?

Cost reduction during connection
Public timing test have confirmed, that the electrical connection of a cable by means of CAGE CLAMP® technology saves up to 75% working time compared with the classic screw connection.

Simple Handling
Cable connection from the top, very easily accessible: The CAGE CLAMP® spring is pressed, and the cable inserted from the front, i.e. in the field of vision of the installation engineer.

Which cable core diameters ?
Suitable for all copper wires from 0,5 mm^2 to 25 mm^2.

Cost saving in material and tooling
- multicore cable ends, cable eyes or cable ring eyes are no longer needed
- Tools such as crimping pliers are no longer needed
- Inadvertently over tightening or breaking of the terminal bolts and the procurement of a new terminal block belong in the past.
- Searching and procurement of nuts and washers for the terminal blocks, which have fallen down, also belongs in the past.

Vibration and shock resistant
Vibration and shock result neither in conductor damage nor in a measurable contact interruption. The connection is service free.

Type of conductors
The CAGE CLAMP®-connector can clamp fine stranded, stranded and solid cores wires.

Terminal connections for single speed motors without motor protection

Standard connection of three phase motors without motor protection via CAGE CLAMP®.

D04 ... D..09

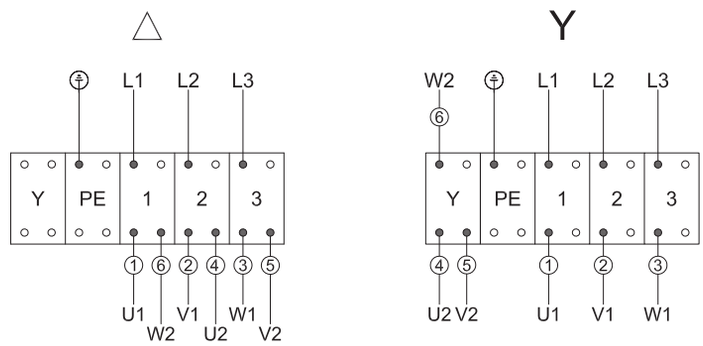

	IEC / EN 60034-8	NEMA MG 1	Farbe
Netzanschluss	L1 L2 L3	L1 L2 L3	
Motorwicklung	U1 V1 W1 U2 V2 W2	T1 T2 T3 T4 T5 T6	schwarz blau braun gelb rot violett
△	Schaltung für niedrige Nennspannung (z.B.: 230 V)		
Y	Schaltung für hohe Nennspannung (z.B.: 400 V)		

D..11 ... D..18

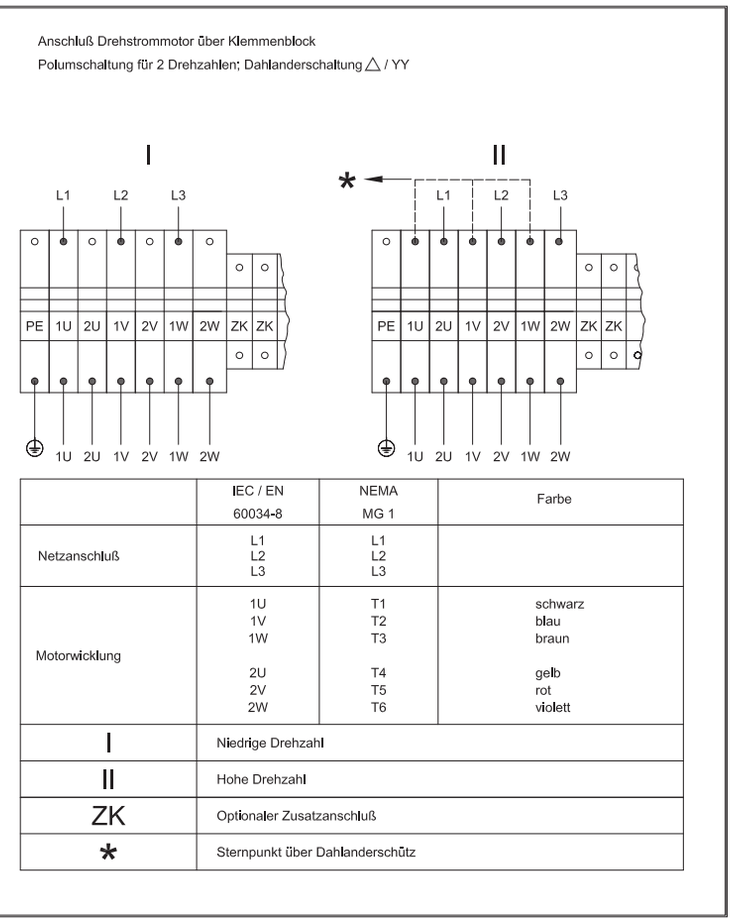

	IEC / EN 60034-8	NEMA MG 1	Farbe
Netzanschluß	L1 L2 L3	L1 L2 L3	
Motorwicklung	1U 1V 1W 2U 2V 2W	T1 T2 T3 T4 T5 T6	schwarz blau braun gelb rot violett
I	Niedrige Drehzahl		
II	Hohe Drehzahl		
ZK	Optionaler Zusatzanschluß		
*	Sternpunkt über Dahlanderschütz		

Terminal connections for single speed motors with motor protection

Standard connection of three phase motors with motor protection via CAGE CLAMP®.
D04 ... DO..09

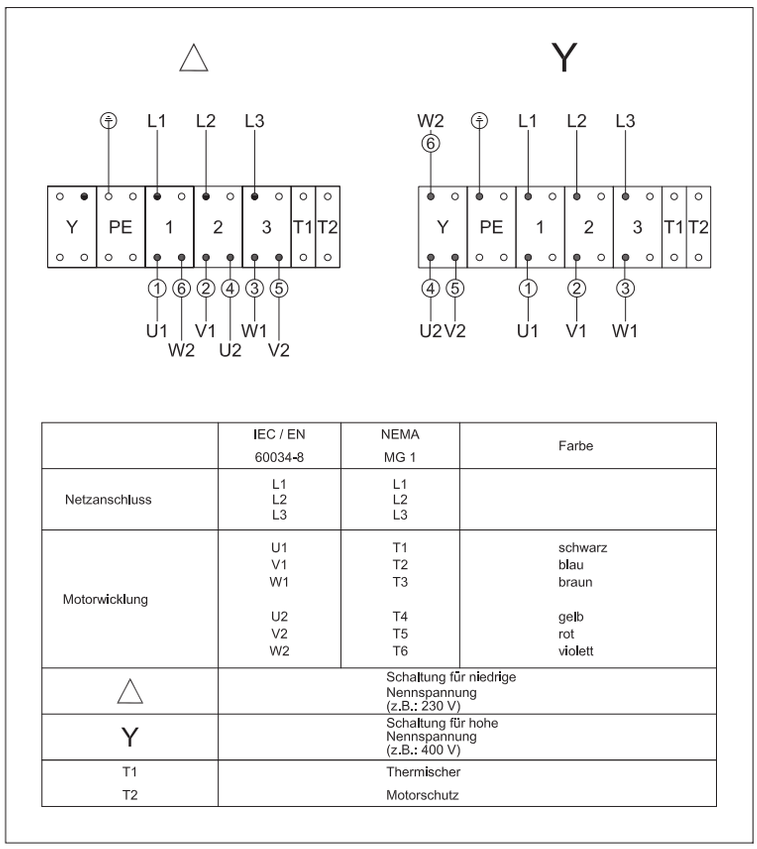

	IEC / EN 60034-8	NEMA MG 1	Farbe
Netzanschluss	L1 L2 L3	L1 L2 L3	
Motorwicklung	U1 V1 W1 U2 V2 W2	T1 T2 T3 T4 T5 T6	schwarz blau braun gelb rot violett
△	Schaltung für niedrige Nennspannung (z.B.: 230 V)		
Y	Schaltung für hohe Nennspannung (z.B.: 400 V)		
T1 T2	Thermischer Motorschutz		

D..11 ... D..18

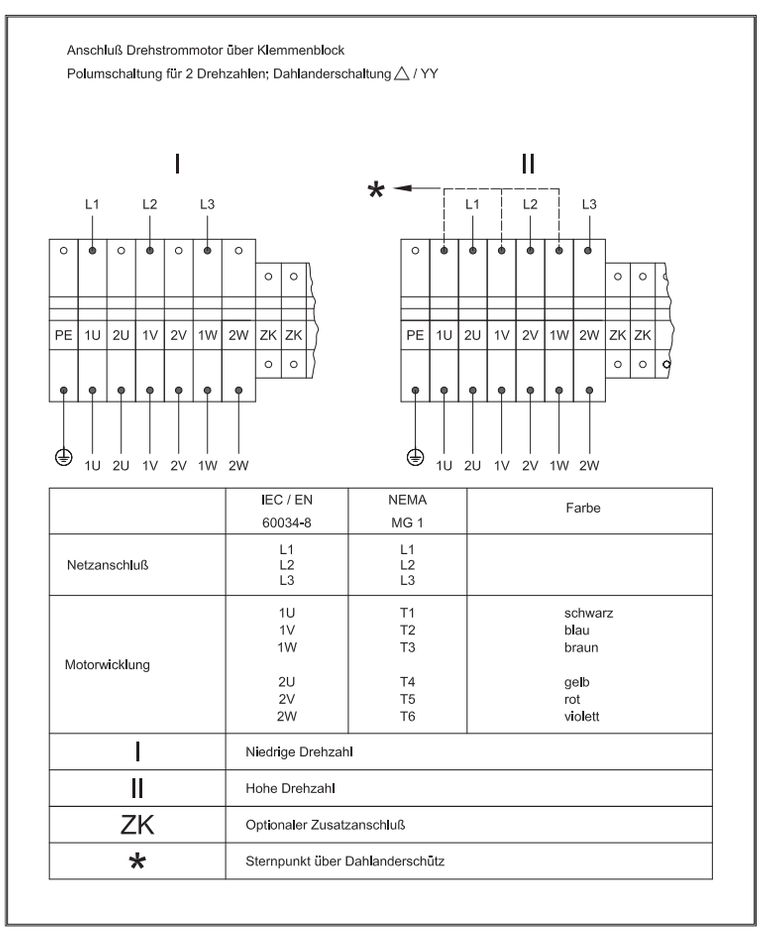

	IEC / EN 60034-8	NEMA MG 1	Farbe
Netzanschluß	L1 L2 L3	L1 L2 L3	
Motorwicklung	1U 1V 1W 2U 2V 2W	T1 T2 T3 T4 T5 T6	schwarz blau braun gelb rot violett
I	Niedrige Drehzahl		
II	Hohe Drehzahl		
ZK	Optionaler Zusatzanschluß		
*	Sternpunkt über Dahlanderschütz		

Terminal connections for pole changing motors in Dahlander connection (Δ/YY or Y/YY)

Standard connection of three phase motors without motor protection via CAGE CLAMP®.
D04 ... D..09

Motor 2 Drehzahlen, Dahlanderschaltung D/YY oder Y/YY

(T1-T2 Thermischer Motorschutz optional)

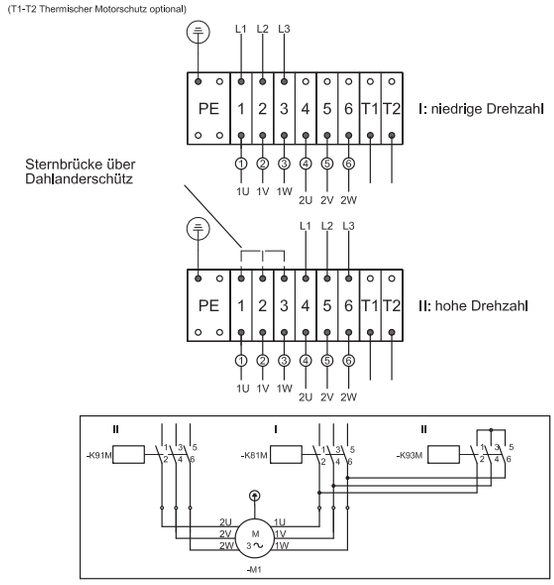

	IEC / EN 60034-8	NEMA MG 1	Farbe
Netzanschluß	L1 L2 L3	L1 L2 L3	
Motorwicklung	1U 1V 1W 2U 2V 2W	T1 T2 T3 T5 T6 T4	schwarz blau braun gelb rot violett
I	Niedrige Drehzahl		
II	Hohe Drehzahl		

Anschluß Drehstrommotor über Klemmenblock

Polumschaltung für 2 Drehzahlen; Dahlanderschaltung △ / YY

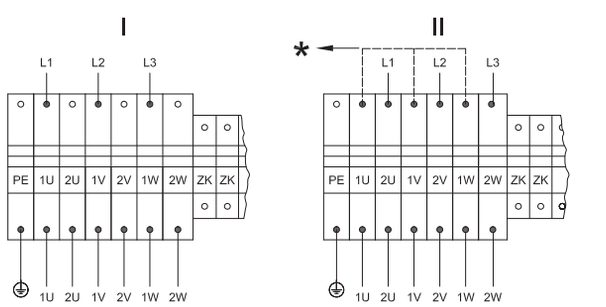

	IEC / EN 60034-8	NEMA MG 1	Farbe
Netzanschluß	L1 L2 L3	L1 L2 L3	
Motorwicklung	1U 1V 1W 2U 2V 2W	T1 T2 T3 T4 T5 T6	schwarz blau braun gelb rot violett
I	Niedrige Drehzahl		
II	Hohe Drehzahl		
ZK	Optionaler Zusatzanschluß		
*	Sternpunkt über Dahlanderschütz		

Terminal connections for pole changing motors with two separate windings (Y/Y or Δ/Δ)

Standard connection of three phase motors with motor protection via CAGE CLAMP®.
D04 ... D..09

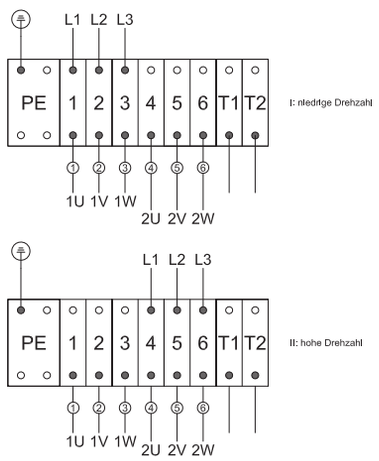

	IEC / EN 60034-8	NEMA MG 1	Farbe
Netzanschluß	L1 L2 L3	L1 L2 L3	
Motorwicklung	1U 1V 1W 2U 2V 2W	T1 T2 T3 T11 T12 T13	schwarz blau braun gelb rot violett
I			
II			
T1 T2			

D..11 ... D..18

Anschluß Drehstrommotor über Klemmenblock
Polumschaltung für 2 Drehzahlen; getrennte Wicklung Y/Y oder △/△

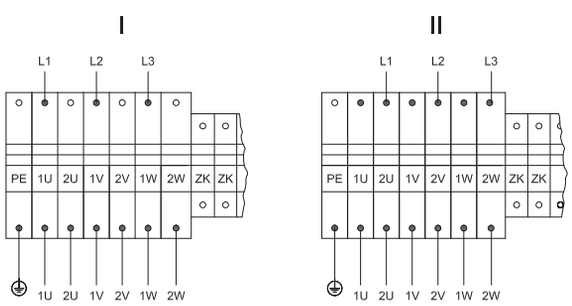

	IEC / EN 60034-8	NEMA MG 1	Farbe
Netzanschluß	L1 L2 L3	L1 L2 L3	
Motorwicklung	1U 1V 1W 2U 2V 2W	T1 T2 T3 T4 T5 T6	schwarz blau braun gelb rot violett
I	Niedrige Drehzahl		
II	Hohe Drehzahl		
ZK	Optionaler Zusatzanschluß		

Plug-and-socket connection

D06 to D..16 Bauer motors are available with plug-in motor connection. The socket housing is mounted on the fan-cowl side of the terminal box as standard. This layout minimises the protrusion caused by the plug.
The standard plug-and-socket type connection incorporates the attachment housing, pin insert and cover. Grommet-type housings and jack inserts are available on request at extra cost. Pin assignments on request (dimensional drawing, see chapter 17 "Dimensional drawing, plug-connector terminal box").

A design with single clamp lever according to the DESINA regulation of the „Verbandes Deutscher Werkzeugmaschinenhersteller" (VDW) is also available.

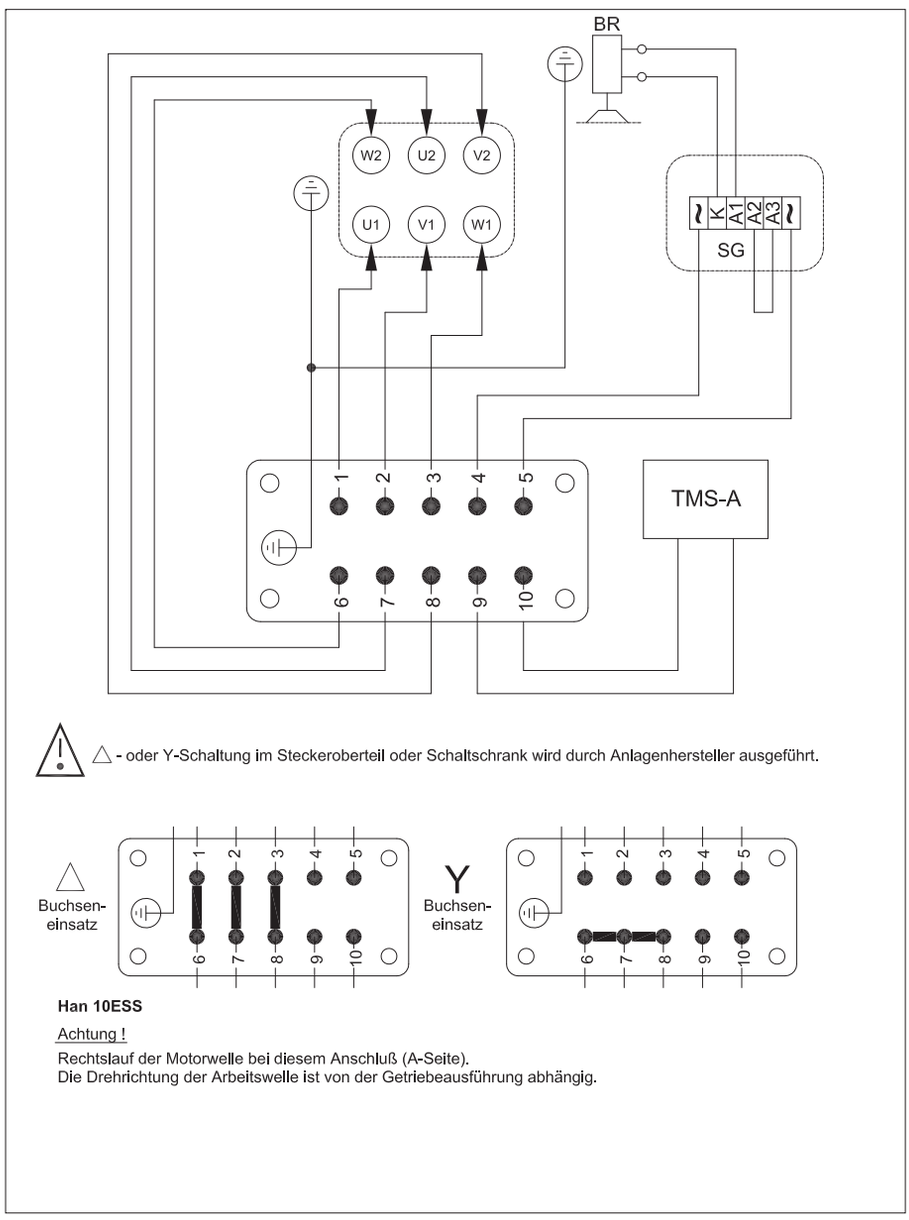

The motors are also available with a low-cost round plug connector as an alternative. This is fitted at the factory in the standard terminal box and is also suitable for brake connection, thermistors and thermostats. Additional information on request.

Bauer motors from D08 with motor-mounted brake are also available with plug-in brake connection. This means that if it requires attention, the brake can be replaced on site with no loss of time

Motor protection

Each geared motor requires a current-dependent motor protection switch or an overcurrent relay with thermal delay in the switchgear to protect the motor windings. The rated motor currents required for settings are stated in the order acknowledgment. Thermal protection for the winding is recommended as an additional safety measure for special operating conditions (short-time or intermittent periodic duty, high switching frequency, severe voltage fluctuations or restricted cooling) and for operation in conjunction with a frequency converter.

Thermistors (PTC)

Thermistors are temperature-dependent resistors which are fitted in each phase winding. In conjunction with a motor protection switch, they ensure optimum protection for the winding in the event of rapid temperature rise. Characteristic to DIN 44081 and "Mark A" to IEC 34-11-2. Thermistors are available for all motors at extra cost. The requisite monitoring device is not included in the scope of supply.

Thermischer Motorschutz mit PTC-Thermistoren

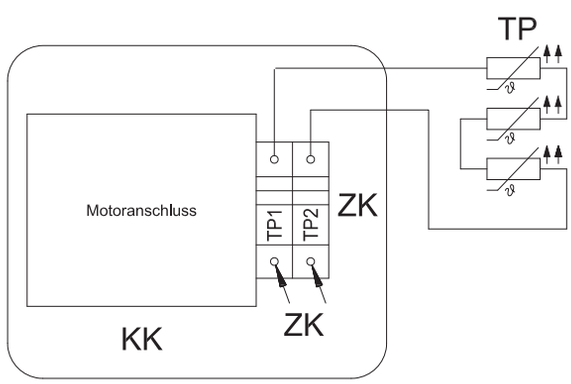

KK	Motor-Klemmenkasten
ZK	Zusatzklemmen
TP	PTC-Thermistoren DIN 44081/IEC 34-11-2 Mark A
TCU	Anschluß für Thermistor-Steuergerät EN 60947 Max. Prüfspannung 2,5 VDC / Thermistor bei Ex mit Prüfzeichen: PTB 3.53-PTC A

Die gezeichnete Anordnung der Zusatzklemmen muß nicht der räumlichen entsprechen.

Thermostatic protection

Bimetal switches are used for slow-acting, independent temperature monitoring and are embedded in each winding section of the motor.
The bimetal disc is dimensioned such that when the temperature rises above a specific, previously set value, the disc suddenly snaps from a convex state to a concave state and the contact moves vertically away from the contact plate. In this state the switch is either open (normally closed switch) or closed (normally open switch). A significant temperature change is necessary to allow the bimetal disc to independently snap back to its initial position. When it does, the switch is again closed (normally closed switch) or open (normally open switch). Thermal protection switches are available for all motors at additional cost. For technical reasons, this option is not recommended for large motors (D11 to D18).

Thermischer Motorschutz mit Thermostaten (Öffner)

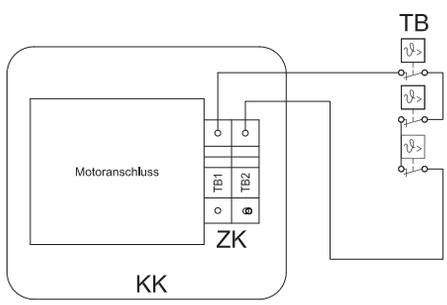

KK	Motor-Klemmenkasten
ZK	Zusatzklemmen
TB	Thermostaten mit Öffnungskontakt max. 250VAC 1,6A

Die gezeichnete Anordnung der Zusatzklemmen muß nicht der räumlichen entsprechen.

Thermischer Motorschutz mit Thermostaten (Schliesser)

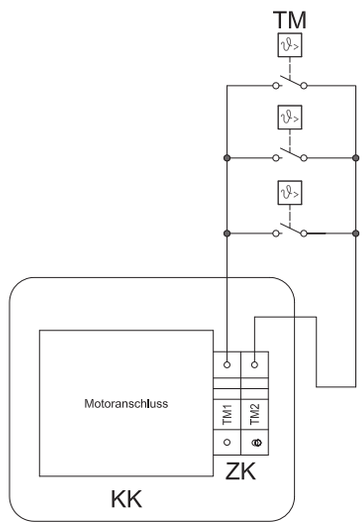

KK	Motor-Klemmenkasten
ZK	Zusatzklemmen
TB	Thermostaten mit Öffnungskontakt max. 250VAC 1,6A

Die gezeichnete Anordnung der Zusatzklemmen muß nicht der räumlichen entsprechen.

KTY sensors

KTY sensors with heat-shrink insulation can be used to measure and monitor critical surface temperatures and internal temperatures of motors and machines. These sensors are suitable for use in harsh industrial environments in all places where accurate measurements with a single sensor are required. KTY sensors are available for all types of motors at additional cost.

Type 84-130SH: primarily installed in motors that are operated with Siemens frequency converters.

Working principle: KTY sensors are temperature-dependent components. The resistance of the KTY sensor increases when its temperature rises. The characteristic curve is nearly linear in the sensor's measuring range; the reference resistance (at 100 °C) is 970 to 1030 ohms.

Widerstands-Temperaturfühler KTY84-130SH

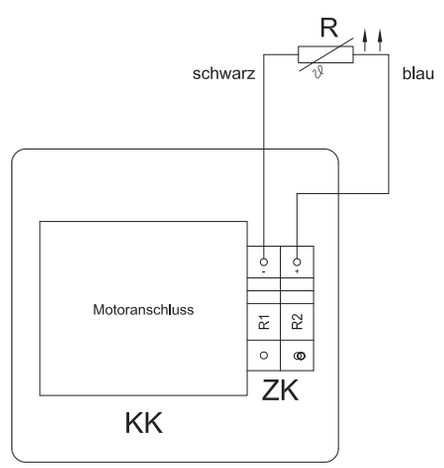

KK	Motor-Klemmenkasten
ZK	Zusatzklemmen
R	Widerstands-Temperaturfühler

Die gezeichnete Anordnung der Zusatzklemmen muß nicht der räumlichen entsprechen.

PT100 sensors

Precise monitoring of motor temperatures is necessary in many fields of industry. Pt100 sensors feature high accuracy, short response time and long-term stability, and they are suitable for use over a wide range of temperatures. Pt100 sensors are available for all motor types at additional cost.

Specifications

Nominal resistance: 100 Ω at 0 °C

The resistance characteristics are specified in EN 60751.

Widerstands-Temperaturfühler PT 100

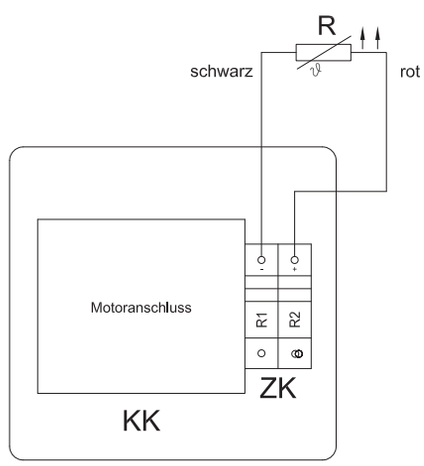

KK	Motor-Klemmenkasten
ZK	Zusatzklemmen
R	Widerstands-Temperaturfühler

Die gezeichnete Anordnung der Zusatzklemmen muß nicht der räumlichen entsprechen.

Insulation

The gearmotors described in the selection tables of this catalogue with the motor sizes D04, D05, D06, D08, D..09S and D..09L are executed in insulation class B. Temperature class F is available on request at extra cost.
4-pole motors D07 and D..09XA4 (2.2 kW) to D..18XA4 (30 kW) and all multi-speed motors are rated in Temperature Class F as standard.
Insulation Class F bestows the winding a multiple protection against high humidity, acidic gases and heavy tropical influences while making the same shock resistant and more resistant to heat. Protection against insects (termites) is guaranteed through the complete enclosure (IP65) as long as the mains cables are encased in metal.

Degree of protection

Bauer motors from motor size D06 are manufactured to IP65 degree of protection as standard. Motor sizes D04 and D05 have smooth housings, degree of protection IP 54, on request in IP65 at extra cost. The motor terminal box is always IP 65.

Special corrosion protection

If high requirements for corrosion resistance are required, the geared motors are available with three levels of enhanced corrosion protection:

CORO1: Finished with two-component paint to protect against chemically aggressive gases and vapours.

CORO2: External paint as CORO1. In addition, sheet steel fan cowl with coating. The screws for the terminal-box cover are non-rusting steel.

CORO3 with IP 66: Available from motor size D06. Corrosion protection as CORO2. All motors manufactured within Temperature Class F. Terminal box compartment separated from motor interior by cast resin. Threaded cable entries and mating faces have special seals. See Bauer special imprint SD1 for more information.

Speed of output shaft

The rated speeds in the selection tables are guidelines for load at rated power. Speed can vary depending on degree of load and temperature (particularly in the case of relatively small motors). Combination gear units for lower speeds are available on request.

General

#Aside from special drives (such as lifting equipment), standard motors are always designed for continuous running duty. If the drive is operated with frequent on/off cycles, it may be necessary to select a larger motor with a special design. On the other hand, with pronounced short-time duty it is often possible to select a smaller model. **For this reason, it is technically necessary or economically advantageous to inform the motor manufacturer of any duty type that differs from continuous running.**

Continuous running duty (S1)

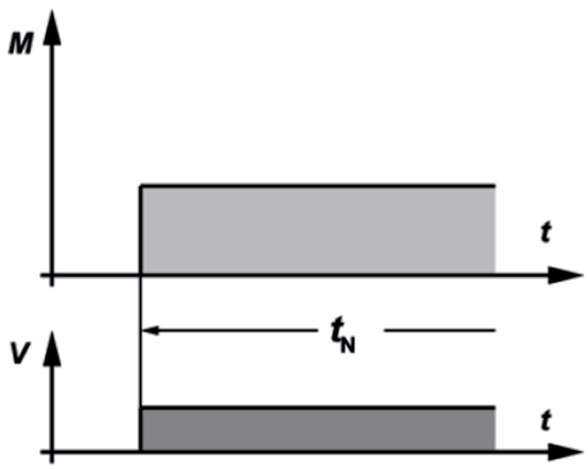

Operation under rated load for sufficient time to allow temperature equilibrium to be attained, such that the temperature does not increase any more with continued operation. The equipment can operate continuously under the rated load without exceeding the allowable temperature.

Short-time duty (S2)

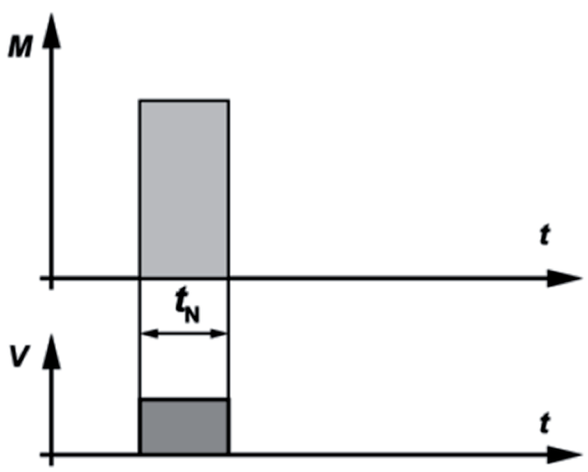

The operating time under rated load is short compared with the subsequent rest period. The standard operating times are 10, 30, 60 and 90 minutes. The equipment can operate for this period under the rated load without exceeding the allowable temperature.

Example: S2 – 60 min

Intermittent periodic duty (S3)

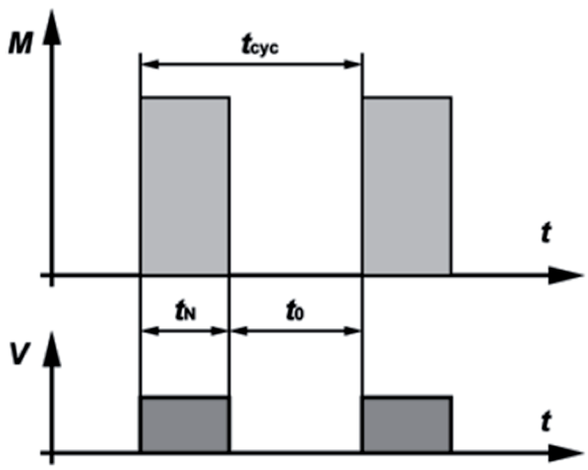

S3 duty consists of a sequence of identical cycles, each composed of an operating time with constant load and a rest time with the windings de-energised. The cycle is such that the starting current does not significantly affect the temperature rise. The operating time under rated load and the subsequent pause are both short. The equipment can operate under load only during the period indicated by the duty cycle as a percentage of the total cycle time (cycle duration).
The standardised duty cycles are 15, 25, 40 and 60%. The cycle duration is 10 minutes unless otherwise specified.

Intermittent periodic duty means that a state of thermal equilibrium is not reached during the load interval.

The duty cycle can be determined as follows:

$$ED = \frac{t_N}{t_{cyc}} \times 100\% = \frac{t_N}{t_N - t_0} \times 100\%$$

Example: S3 – 25%

Intermittent periodic duty with starting (S4)

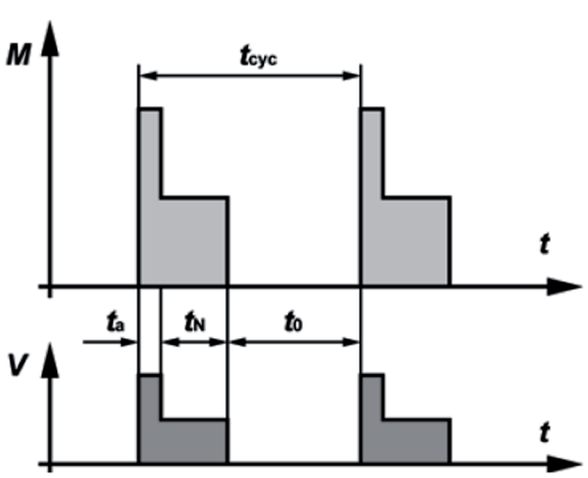

S4 duty consists of a sequence of identical cycles, each of which is composed of a distinct starting time, a time of operation under constant load, and a rest period with the windings de-energised.

The operating time under rated load and the subsequent pause are both short. The equipment can operate under load only during the period indicated by the duty cycle as a percentage of the total cycle time (cycle duration).

The standardised duty cycles are 15, 20, 40 and 60%. The cycle duration is 10 minutes unless otherwise specified.

The load cycle corresponds to mode S3, but with additional heating during the starting time that must be taken into account.

The duty cycle can be determined as follows:

$$ED = \frac{(t_a + t_N)}{t_{cyc}} \times 100\% = \frac{t_a + t_N}{t_a + t_N + t_0} \times 100\%$$

Example: S4 – 25%, $J_M = 0.15$ kgm²

Intermittent periodic duty with electric braking (S5)

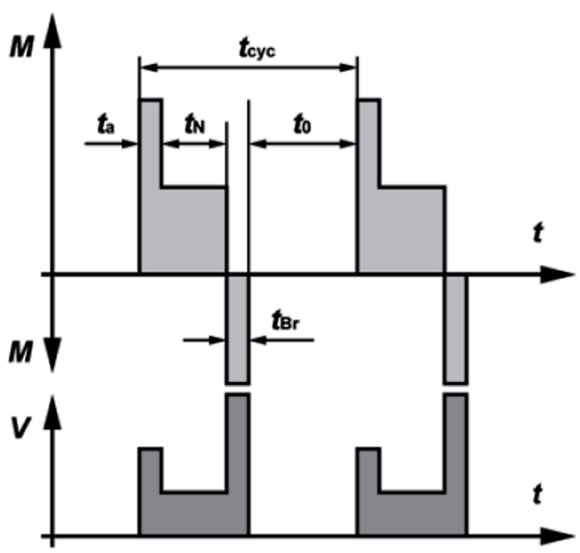

S5 duty consists of a sequence of identical cycles, each of which is composed of a starting time, a time of operation under constant load, a time of fast electric braking, and a rest period with the windings de-energised.
The operating time under rated load and the subsequent pause are both short. The equipment can operate under load only during the period indicated by the duty cycle as a percentage of the total cycle time (cycle duration).
The standardised duty cycles are 15, 20, 40 and 60%. The cycle duration is 10 minutes unless otherwise specified.

The load cycle corresponds to S3 duty, but with additional warming during the starting time t_a and the braking time t_{Br} taken into account.

The duty cycle can be determined as follows:

$$ED = \frac{(t_a + t_N + t_{Br})}{t_{cyc}} \times 100\% = \frac{t_a + t_N + t_{Br}}{t_a + t_N + t_{Br} + t_0} \times 100\%$$

Example: S5 – 25%; $J_M = 0.15$ kgm², $J_{ext} = 0.7$ kgm²

Continuous-operation periodic duty (S6)

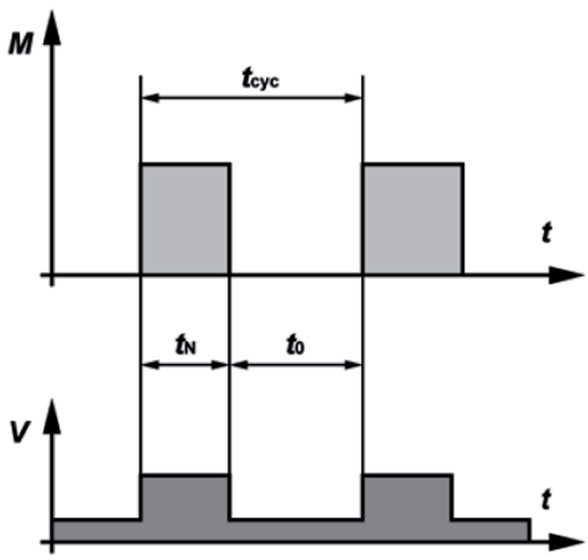

This type of duty corresponds to S3, with the exception that the equipment remains energised during the rest periods. In other words, it operates with no load during these periods. The duty cycle and cycle duration are specified the same way as for S3 duty.

The duty cycle can be determined as follows:

$$ED = \frac{t_N}{t_{cyc}} \times 100\% = \frac{t_N}{t_N + t_0} \times 100\%$$

Example: S6 – 40%

Continuous-operation periodic duty with electric braking (S7)

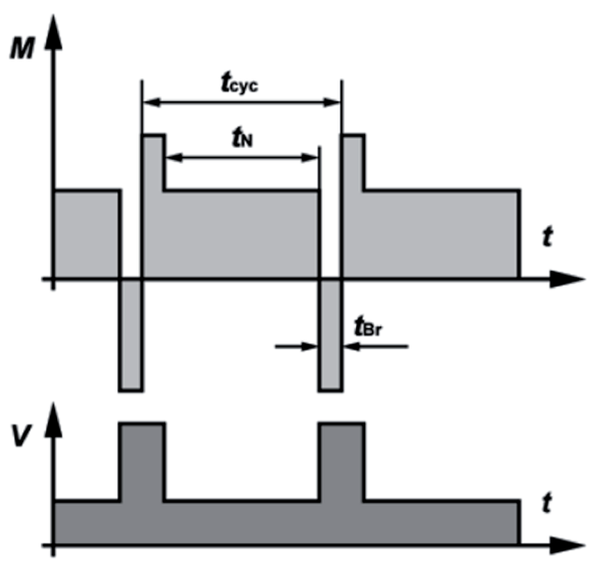

The machine starts up, operates under load, and then is braked electrically, for example by feeding it from a DC power source. Following this, it starts up again immediately. The machine can operate continuously in this manner if the specified moments of inertia of the motor J_M and of the load J_{Ext} as well as the specified duty cycle are not exceeded. If the cycle duration is not specified, it is assumed to be 10 minutes.

The duty cycle can be determined as follows: DC = 1
Example: S7 – $J_M = 0.4\ kgm^2$, $J_{ext} = 7.5\ kgm^2$

Continuous-operation periodic duty with relative load/speed changes (S8)

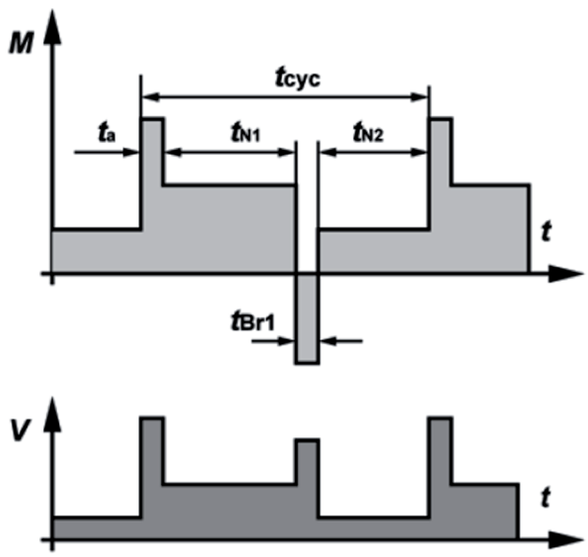

The machine runs continuously under variable load with frequent speed variations. The machine can operate continuously in this manner if at each speed the specified values are not exceeded (moments of inertia J_M and J_{Ext} cycle duration (if other than 10 minutes), rated output and duty cycle. With a moment of inertia of 1 kg m², the acceleration characteristics are the same as with a mass of 1 kg at a distance of 1 m from the axis of rotation).

The duty cycle can be determined as follows:

$$ED = \frac{t_a + t_{N1}}{t_{cyc}} \times 100\% = \frac{t_{Br} + t_{N2}}{t_{cyc}} \times 100\%$$

Example: S8 – $J_M = 0.5$ kgm², $J_{ext} = 6$ kgm²

Duty with non-periodic load and speed variations (S9)

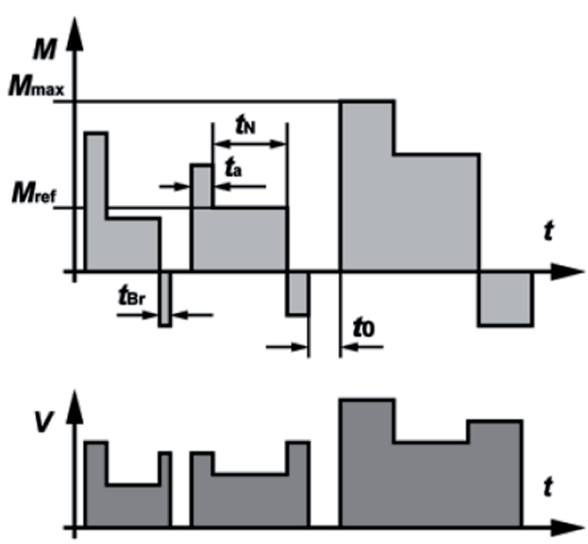

In S9 duty the load and the speed vary non-periodically within the permissible operating range. This includes frequently applied overloads, which must never exceed the reference load.
For this duty type, a constant load appropriately selected and based on duty type S1 shall be taken as the reference value M_{ref} for the overload.

Duty types as defined by EN 60034

Duty with discreet constant loads and speeds (S10)

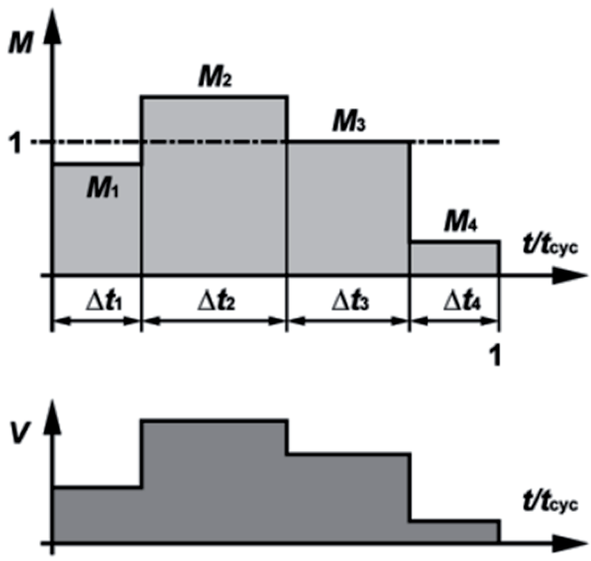

S10 duty comprises operation with at most four different load levels, each of which is maintained long enough to allow the machine to reach thermal equilibrium.
The minimum load within a duty cycle may have a value of zero (no-load operation or at rest with the windings de-energised).
The appropriate abbreviation is S10 followed by the per unit quantities $p/\Delta t$ for the respective load and its duration and the per unit quantity *TL* for the relative thermal life expectancy of the insulation system. The reference value for the thermal life expectancy is the thermal life expectancy at rating for continuous running duty and permissible limits of temperature rise based on duty type S1. For a time de-energized and at rest, the load shall be indicated by the letter *r*.

Example: S10 $p/\Delta t$ = 1.1/0.4, 1/0.3, 0.9/0.2, *r*/0.1; *TL* = 0.6

4-pole IE1 motors for continuous operation S1, line frequency 50 Hz
For use after 16 June 2011 only in non-EU countries, except for brake motors

P_N	Type	n_N	M_N	I_N	Connec-tion	cosφ	η	η	η	I_A/I_N	M_A/M_N	M_S/M_N	M_K/M_N	J_{rot}	Brake
kW		1/min	Nm	400 V A			(100% - Last) %	(75% - Last) %	(50% - Last) %					kgm^2	
0,03	**D04LA4**	1350	0,21	0,20	Y	0,60	-	-	-	2,2	2,6	2,6	3,0	0,000175	
0,04	**D04LA4**	1350	0,28	0,20	Y	0,60	-	-	-	2,2	2,0	2,0	2,3	0,000175	
0,06	**D04LA4**	1350	0,42	0,30	Y	0,60	-	-	-	2,3	2,1	2,1	2,4	0,000175	E003
0,09	**D04LA4**	1350	0,63	0,45	Y	0,69	-	-	-	2,5	2,2	2,2	2,6	0,000175	
0,12	**D04LA4**	1350	0,84	0,46	Y	0,73	-	-	-	2,3	1,7	1,7	1,9	0,000175	
0,06	**D05LA4**	1350	0,42	0,35	Y	0,72	-	-	-	3,7	3,7	3,5	3,7	0,000295	
0,09	**D05LA4**	1350	0,63	0,38	Y	0,70	-	-	-	3,9	3,0	2,8	3,0	0,000295	
0,12	**D05LA4**	1350	0,85	0,42	Y	0,73	-	-	-	3,4	2,2	2,1	2,2	0,000295	E003
0,18	**D05LA4**	1350	1,28	0,63	Y	0,70	-	-	-	3,4	2,3	2,2	2,4	0,000295	
0,25	**D05LA4**	1350	1,75	0,88	Y	0,69	-	-	-	3,3	2,3	2,2	2,3	0,000295	
0,06	**D06LA4**	1350	0,42	0,35	Y	0,72	-	-	-	3,7	3,7	3,5	3,7	0,000295	
0,09	**D06LA4**	1350	0,63	0,38	Y	0,70	-	-	-	3,9	3,0	2,8	3,0	0,000295	
0,12	**D06LA4**	1350	0,85	0,42	Y	0,73	-	-	-	3,4	2,2	2,1	2,2	0,000295	E003
0,18	**D06LA4**	1350	1,28	0,63	Y	0,70	-	-	-	3,4	2,3	2,2	2,4	0,000295	
0,25	**D06LA4**	1350	1,76	0,89	Y	0,69	-	-	-	3,2	2,3	2,2	2,3	0,000295	
0,3	**D07LA4**	1350	2,1	1,30	Y	0,60	-	-	-	2,7	2,7	2,7	2,8	0,000385	E003
0,37	**D07LA4**	1350	2,6	1,35	Y	0,66	-	-	-	2,6	2,2	2,2	2,2	0,000385	E004
0,55	**DSE08MA4**	1400	3,75	1,45	Y	0,72	75,4	75,2	72,0	4,2	2,1	2,0	2,4	0,00115	
0,75	**DSE08LA4**	1400	5,1	1,95	Y	0,76	75,6	76,2	72,7	4,6	2,0	2,0	2,4	0,00150	ES(X)010
1,1	**DSE08XA4**	1400	7,5	2,8	Y	0,75	75,5	76,8	73,5	3,7	2,0	1,8	2,2	0,00170	
1,1	**DSE09SA4**	1420	7,5	2,6	Y	0,76	80,0	80	77,5	4,9	2,5	2,2	2,8	0,00245	ES(X)010
1,5	**DSE09LA4**	1420	10,1	3,5	Y	0,76	80,7	80,9	79,5	5,0	2,5	2,3	2,9	0,00320	ES(X)027
2,2	**DSE09XA4**	1420	15	4,9	Y	0,81	80,5	81,1	80,4	4,5	2,3	2,2	2,6	0,00380	
3	**DSE11SA4**	1420	20	6,4	D	0,80	84,4	85,0	83,8	5,9	2,7	2,5	3,2	0,00810	ES(X)027
4	**DSE11MA4**	1420	27	8,4	D	0,83	84,0	84,9	84,2	5,5	2,8	2,4	3,0	0,01050	ES(X)040
5,5	**DSE11LA4**	1420	37	11,3	D	0,83	85,8	86,2	85,4	6,3	2,8	2,6	3,2	0,01400	ES(X)070
7,5	**DSE13MA4**	1440	50	15,3	D	0,81	87,5	87,8	87,1	6,2	2,8	2,5	3,2	0,02900	ES(X)040
9,5	**DSE13LA4**	1440	63	19,2	D	0,82	87,1	87,5	87,5	6,0	2,9	2,6	3	0,03450	ES(X)070 ES(X)125
11	**DSE16MA4**	1460	72	22,6	D	0,81	87,7	88,0	87,3	6,0	2,5	2,1	2,7	0,05700	ES(X)125
15	**DSE16LA4**	1460	98	29,5	D	0,83	88,9	89,2	88,9	6,1	2,5	2,1	2,8	0,07600	ES(X)200
18,5	**DSE16XA4**	1460	121	37,5	D	0,81	89,3	89,9	88,5	6,1	2,6	2,2	2,8	0,08700	ZS(X)300
22	**DSE18LA4**	1460	144	41,5	D	0,85	90,7	91,0	90,5	6,8	3,0	2,5	2,8	0,16000	ES(X)250
30	**DSE18XA4**	1460	196	56	D	0,85	90,9	91,2	90,8	6,8	3,1	2,4	2,8	0,19500	ZS(X)500
37	**DHENF22SG4**	1480	238	63	D	0,89	94,4	94,4	93,7	7,5	2,2	1,5	2,7	0,53	-
45	**DHENF22MG4**	1480	289	77	D	0,90	94,4	94,4	93,8	7,5	2,0	1,6	2,2	0,58	
55	**DHENF25SG4**	1480	355	93	D	0,90	94,3	94,6	94,1	7,0	2,3	1,6	2,5	0,79	-
75	**DHENF28MG4**	1480	483	126	D	0,91	94,7	94,7	94,3	7,3	2,7	1,9	2,8	0,92	-

P — Rated output at 50 HZ mains frequency
n — Typical rated rotor shaft speed with 50 Hz mains frequency
M_N — Rated torque at rotor shaft
I_N — Rated current at 400 V (for other special voltages, multiply by the inverse voltage ratio to convert the current at 400 V to the current at the desired voltage)
cos φ — Power factor
I_A/I_N — Relative starting current
M_A/M_N — Relative starting torque
M_S/M_N — Relative pull-up torque
M_K/M_N — Relative breakdown torque
J_{rot} — Rotor moment of inertia
η — Efficiency with different loads
Brake — See Section 16 for brake configuration.

The standard motor winding configuration is for 400 V / 50 Hz.

All motors designed for thermal class F are suitable for operation over the voltage range 380–420 V or 400 V +/- 10%.
Note: the current, power factor and torque vary depending on the deviation from 400 V.
See Bauer Special Publication SD4xx for additional information.

Motors

Technical data of the 50 Hz motors

4-pole motors for continuous operation S1, line frequency 50 Hz

P_N	Type	n_N	M_N	I_N	Connec-tion	cosφ	η	η	η	I_A/I_N	M_A/M_N	M_S/M_N	M_K/M_N	J_{rot}	Brake
kW		1/min	Nm	(400 V) A			(100% - Last) %	(75% - Last) %	(50% - Last) %					kgm^2	
0,03	**D04LA4**	1350	0,21	0,20	Y	0,60	-	-	-	2,2	2,6	2,6	3,0	0,000175	
0,04	**D04LA4**	1350	0,28	0,20	Y	0,60	-	-	-	2,2	2,0	2,0	2,3	0,000175	
0,06	**D04LA4**	1350	0,42	0,30	Y	0,60	-	-	-	2,3	2,1	2,1	2,4	0,000175	E003
0,09	**D04LA4**	1350	0,63	0,45	Y	0,69	-	-	-	2,5	2,2	2,2	2,6	0,000175	
0,12	**D04LA4**	1350	0,84	0,46	Y	0,73	-	-	-	2,3	1,7	1,7	1,9	0,000175	
0,06	**D05LA4**	1350	0,42	0,35	Y	0,72	-	-	-	3,7	3,7	3,5	3,7	0,000295	
0,09	**D05LA4**	1350	0,63	0,38	Y	0,70	-	-	-	3,9	3,0	2,8	3,0	0,000295	
0,12	**D05LA4**	1350	0,85	0,42	Y	0,73	-	-	-	3,4	2,2	2,1	2,2	0,000295	E003
0,18	**D05LA4**	1350	1,28	0,63	Y	0,70	-	-	-	3,4	2,3	2,2	2,4	0,000295	
0,25	**D05LA4**	1350	1,75	0,88	Y	0,69	-	-	-	3,3	2,3	2,2	2,3	0,000295	
0,06	**D06LA4**	1350	0,42	0,35	Y	0,72	-	-	-	3,7	3,7	3,5	3,7	0,000295	
0,09	**D06LA4**	1350	0,63	0,38	Y	0,70	-	-	-	3,9	3,0	2,8	3,0	0,000295	
0,12	**D06LA4**	1350	0,85	0,42	Y	0,73	-	-	-	3,4	2,2	2,1	2,2	0,000295	E003
0,18	**D06LA4**	1350	1,28	0,63	Y	0,70	-	-	-	3,4	2,3	2,2	2,4	0,000295	
0,25	**D06LA4**	1350	1,76	0,89	Y	0,69	-	-	-	3,2	2,3	2,2	2,3	0,000295	
0,3	**D07LA4**	1350	2,1	1,30	Y	0,60	-	-	-	2,7	2,7	2,7	2,8	0,000385	E003
0,37	**D07LA4**	1350	2,6	1,35	Y	0,66	-	-	-	2,6	2,2	2,2	2,2	0,000385	E004
0,37	**DHE08MA4**	1420	2,45	1,20	Y	0,60	76,2	76,0	74,2	5,4	3,2	3,0	3,6	0,00115	
0,55	**DHE08LA4**	1420	3,7	1,36	Y	0,74	78,4	78,8	76,0	6,8	2,1	2,0	2,4	0,0015	ES(X)010
0,75	**DHE08XA4**	1420	5,0	1,88	Y	0,72	79,7	80,0	77,4	4,7	2,3	2,2	2,7	0,00170	
0,75	**DHE09SA4**	1440	5,0	1,8	Y	0,73	81,6	81,0	77,4	5,9	3,1	2,7	3,5	0,00245	
1,1	**DHE09LA4**	1440	7,3	2,5	Y	0,75	82,7	82,3	79,8	5,9	2,9	2,7	3,4	0,0032	ES(X)010
1,5	**DHE09XA4**	1440	10,0	3,3	Y	0,78	83,2	82,8	79,5	5,6	3,0	2,9	3,3	0,0038	ES(X)027
2,2	**DHE09XA4C**	1440	14,5	4,75	Y	0,79	84,5	85,0	83,5	5,2	1,8	1,7	2,7	0,0053	
2,2	**DHE11SA4**	1440	14,5	4,6	Y	0,80	86,2	86,0	84,7	7,0	3,1	2,8	3,6	0,0081	ES(X)027
3	**DHE11MA4**	1440	20	6,3	D	0,80	86,5	86,5	84,7	6,7	3,4	2,8	3,7	0,0105	ES(X)040
4	**DHE11LA4**	1440	26,5	8,4	D	0,79	87,5	87,0	85,3	7,6	3,6	3,3	4,2	0,0140	ES(X)070
5,5	**DHE11LA4C**	1460	36	11,0	D	0,82	87,8	88,2	86,5	6,7	2,1	1,6	3,4	0,0162	
5,5	**DHE13MA4**	1460	36	11,0	D	0,81	88,9	88,9	87,6	7,2	3,2	2,9	3,6	0,0290	ES(X)040
7,5	**DHE13LA4**	1460	49	15,1	D	0,81	88,9	89,2	87,9	7,0	3,3	3,0	3,5	0,0345	ES(X)070 ES(X)125
9,5	**DHE16MA4**	1470	62	19,7	D	0,78	89,4	89,4	86,5	6,8	2,9	2,5	3,2	0,057	ES(X)125
11	**DHE16LA4**	1470	71	22,5	D	0,78	90,3	90,0	88,3	7,9	3,5	2,9	3,8	0,076	ES(X)200
15	**DHE16XA4**	1470	97	31	D	0,77	90,6	90,8	88,8	7,2	3,2	2,8	3,5	0,087	ZS(X)300
18,5	**DHE18LA4**	1470	120	35	D	0,83	91,5	91,7	90,0	7,9	3,6	3,0	3,3	0,160	ES(X)250
22	**DHE18XA4**	1470	142	43,5	D	0,80	92,0	91,6	89,6	8,7	4,2	3,3	3,9	0,195	ZS(X)500
30	**DHENF20LG4**	1480	194	53	D	0,87	93,7	93,7	93,1	7,3	2,3	1,9	3,0	0,310	-
37	**DHENF22SG4**	1480	238	63	D	0,89	94,4	94,4	93,7	7,5	2,2	1,5	2,7	0,53	-
45	**DHENF22MG4**	1480	289	77	D	0,90	94,4	94,4	93,8	7,5	2,0	1,6	2,2	0,58	
55	**DHENF25SG4**	1480	355	93	D	0,90	94,3	94,6	94,1	7,0	2,3	1,6	2,5	0,79	-
75	**DHENF28MG4**	1480	483	126	D	0,91	94,7	94,7	94,3	7,3	2,7	1,9	2,8	0,92	-

P	Rated power at 50 Hz line frequency
n	Guideline value for rated speed at the rotor shaft at 50 Hz line frequency
M_N	Rated torque at the rotor shaft
I_N	Rated current at 400 V (the current can be converted as inverse ratios of voltages from 400 V to the desired special voltage)
cos φ	Power factor
I_A/I_N	Relative starting current
M_A/M_N	Relative breakaway torque
M_S/M_N	Relative pull-up torque
M_K/M_N	Relative breakdown torque
J_{rot}	Mass moment of inertia of the rotor
Brake	recommended standard brake for normal requirements (see chapter 16)

Winding configuration for standard motors for 400 V / 50 Hz.

All motors are suitable for the voltage range 380…420V or 400V +/- 10% if executed in insulation class F.

Important: Current, power factor and torque change as voltage deviates from 400 V.

See Bauer special imprint SD4 for more information

4-pole motors for intermittent periodic duty S3/S6, line frequency 50 Hz

P_N	Type	n_N	M_N	I_N	Connec-tion	cosφ	η	η	η	I_A/I_N	M_A/M_N	M_S/M_N	M_K/M_N	J_{rot}
				400 V			(100% - Last)	(75% - Last)	(50% - Last)					
kW		1/min	Nm	A			%	%	%					kgm^2
0,75	**DPE09LA4**	1440	4,9	1,68	Y	0,76	84,0	83,2	79,9	6,6	3,3	2,7	3,7	0,0032
1,1	**DPE09XA4**	1440	7,25	2,45	Y	0,76	85,0	84,1	81,2	7,1	3,6	3,2	4,0	0,0038
1,5	**DPE09XA4C**	1460	9,8	3,7	Y	0,78	85,3	85,5	83,0	6	2,1	2	3,1	0,0053
1,5	**DPE11SA4**	1460	9,8	3,20	Y	0,79	86,8	86,0	83,0	8,2	3,5	3,0	4,3	0,0081
2,2	**DPE11MA4**	1450	14,5	4,50	Y	0,81	87,0	86,5	84,6	7,8	3,7	3,0	4,0	0,0105
3,0	**DPE11LA4**	1450	19,7	6,05	D	0,81	88,2	88,1	86,2	8,3	3,6	3	4,2	0,0140
4,0	**DPE11LA4C**	1470	26	8,3	D	0,78	88,8	88,5	86,5	7,5	2,2	2	4	0,0162
4,0	**DPE13MA4**	1460	26	7,9	D	0,82	89,1	89,1	87,5	7,7	3,4	2,5	3,7	0,0290
5,5	**DPE13LA4**	1460	35,9	8,0	D	0,81	89,6	89,6	87,5	8,0	3,9	3,5	4,1	0,0345
7,5	**DPE16LA4**	1480	48,4	14,8	D	0,81	90,5	89,6	86,7	8,5	3,8	3,1	4,0	0,076
9,5	**DPE16XA4**	1480	61	18,7	D	0,81	91,0	90,3	87,0	9,5	3,6	3,0	3,9	0,087
11	**DPE18LA4**	1480	71	21,3	D	0,82	91,5	90,6	88,5	9,3	4,5	3,6	4,0	0,160
15	**DPE18XA4**	1480	97	28,4	D	0,83	92,2	91,9	90,8	8,7	4,1	3,3	3,8	0,195

P	Rated power at 50 Hz line frequency, duty type S3/S6
n	Guideline value for rated speed at the rotor shaft at 50 Hz line frequency
M_N	Rated torque at the rotor shaft
I_N	Rated current at 400 V (the current can be converted as inverse ratios of voltages from 400 V to the desired special voltage)
cos φ	Power factor
I_A/I_N	Relative starting current
M_A/M_N	Relative breakaway torque
M_S/M_N	Relative pull-up torque
M_K/M_N	Relative breakdown torque
J_{rot}	Mass moment of inertia of the rotor
Brake	recommended standard brake for normal requirements (see chapter 16)

Winding configuration for standard motors for 400 V / 50 Hz.

See Bauer special imprint SD4 for more information

Motors

Technical data of the 50 Hz motors

4 pole motors for periodic duty S3/S6-75%, Mains Frequency 50 Hz

P_N kW	Type	n_N 1/min	M_N Nm	I_N 400V A	Connection	cos φ	IA/IN	M_A/M_N	M_S/M_N	M_K/M_N	J_{rot} kgm²	Brake
0,03	**D04LA4**	1350	0,21	0,20	Y	0,60	2,2	2,6	2,6	3,0	0,000175	
0,04	**D04LA4**	1350	0,28	0,20	Y	0,60	2,2	2,0	2,0	2,3	0,000175	
0,06	**D04LA4**	1350	0,42	0,30	Y	0,60	2,3	2,1	2,1	2,4	0,000175	E003
0,09	**D04LA4**	1350	0,63	0,45	Y	0,69	2,5	2,2	2,2	2,6	0,000175	
0,12	**D04LA4**	1350	0,84	0,46	Y	0,73	2,3	1,7	1,7	1,9	0,000175	
0,06	**D05LA4**	1350	0,42	0,35	Y	0,72	3,7	3,7	3,5	3,7	0,000295	
0,09	**D05LA4**	1350	0,63	0,38	Y	0,70	3,9	3,0	2,8	3,0	0,000295	
0,12	**D05LA4**	1350	0,85	0,42	Y	0,73	3,4	2,2	2,1	2,2	0,000295	E003
0,18	**D05LA4**	1350	1,28	0,63	Y	0,70	3,4	2,3	2,2	2,4	0,000295	
0,25	**D05LA4**	1350	1,75	0,88	Y	0,69	3,3	2,3	2,2	2,3	0,000295	
0,06	**D06LA4**	1350	0,42	0,35	Y	0,72	3,7	3,7	3,5	3,7	0,000295	
0,09	**D06LA4**	1350	0,63	0,38	Y	0,70	3,9	3,0	2,8	3,0	0,000295	E003
0,12	**D06LA4**	1350	0,85	0,42	Y	0,73	3,4	2,2	2,1	2,2	0,000295	
0,18	**D06LA4**	1350	1,28	0,63	Y	0,70	3,4	2,3	2,2	2,4	0,000295	
0,25	**D06LA4**	1350	1,76	0,89	Y	0,69	3,2	2,3	2,2	2,3	0,000295	
0,3	**D07LA4**	1350	2,1	1,30	Y	0,60	2,7	2,7	2,7	2,8	0,000385	E003
0,37	**D07LA4**	1350	2,6	1,35	Y	0,66	2,6	2,2	2,2	2,2	0,000385	E004
0,55	**DSE08MA4**	1400	3,75	1,45	Y	0,72	4,2	2,1	2,0	2,4	0,00115	
0,75	**DSE08LA4**	1400	5,1	1,95	Y	0,76	4,6	2,0	2,0	2,4	0,00150	ES(X)010
1,1	**DSE08XA4**	1400	7,5	2,8	Y	0,75	3,7	2,0	1,8	2,2	0,00170	
1,1	**DSE09SA4**	1420	7,5	2,6	Y	0,76	4,9	2,5	2,2	2,8	0,00245	ES(X)010
1,5	**DSE09LA4**	1420	10,1	3,5	Y	0,76	5,0	2,5	2,3	2,9	0,00320	ES(X)027
2,2	**DSE09XA4**	1420	15	4,9	Y	0,81	4,5	2,3	2,2	2,6	0,00380	
3	**DSE11SA4**	1420	20	6,4	D	0,80	5,9	2,7	2,5	3,2	0,00810	ES(X)027
4	**DSE11MA4**	1420	27	8,4	D	0,83	5,5	2,8	2,4	3,0	0,01050	ES(X)040
5,5	**DSE11LA4**	1420	37	11,3	D	0,83	6,3	2,8	2,6	3,2	0,01400	ES(X)070
7,5	**DSE13MA4**	1440	50	15,3	D	0,81	6,2	2,8	2,5	3,2	0,02900	ES(X)040
9,5	**DSE13LA4**	1440	63	19,2	D	0,82	6,0	2,9	2,6	3	0,03450	ES(X)125
11	**DSE16MA4**	1460	72	22,6	D	0,81	6,0	2,5	2,1	2,7	0,05700	ES(X)125
15	**DSE16LA4**	1460	98	29,5	D	0,83	6,1	2,5	2,1	2,8	0,07600	ES(X)200
18,5	**DSE16XA4**	1460	121	37,5	D	0,81	6,1	2,6	2,2	2,8	0,08700	ZS(X)300
22	**DSE18LA4**	1460	144	41,5	D	0,85	6,8	3,0	2,5	2,8	0,16000	ES(X)250
30	**DSE18XA4**	1460	196	56	D	0,85	6,8	3,1	2,4	2,8	0,19500	ZS(X)500
37	**DHENF22SG4**	1480	238	63	D	0,89	7,5	2,2	1,5	2,7	0,53	-
45	**DHENF22MG4**	1480	289	77	D	0,90	7,5	2,0	1,6	2,2	0,58	
55	**DHENF25SG4**	1480	355	93	D	0,90	7,0	2,3	1,6	2,5	0,79	-
75	**DHENF28MG4**	1480	483	126	D	0,91	7,3	2,7	1,9	2,8	0,92	-

P	Rated outputs at 50 Hz line frequency
n	Guideline values for rated speeds at the rotor shaft at 50 Hz line frequency
M_N	Rated torques at the rotor shaft
I_N	Rated currents 400 V Δ/YY (currents can be converted as inverse ratios of voltages from 400 V to the desired special voltage)
cos φ	Power factors
I_A/I_N	Relative starting currents
M_A/M_N	Relative breakaway torques
M_S/M_N	Relative pull-up torques
M_K/M_N	Relative breakdown torques
J_{rot}	Mass moment of inertia of the rotor
Brake	Delection of the brake, see chapter 16

Standard motor winding design for 400V / 50 Hz

15

4-pole motors for intermittent periodic duty (S3/S6) and 50 Hz mains frequency

P kW	ED	Type	n 1/min	M_N Nm	IN (400 V) A	Connec-tion	cos φ	I_A/I_N	M_A/M_N	M_S/M_N	M_K/M_N	J_{rot} kgm²
0,15	15%	**D04LA4**	1350	1,05	0,60	Y	0,77	2,0	1,6	1,5	1,6	0,000175
0,3	15%	**D05LA4**	1350	2,1	0,98	Y	0,75	2,6	1,9	1,8	1,9	0,000295
0,3	60%	**D06LA4**	1350	2,1	0,98	Y	0,75	2,6	1,9	1,8	1,9	0,000295
0,55	60%	**D07LA4**	1350	3,9	1,95	Y	0,86	3,4	1,6	1,5	1,6	0,000385
0,75	60%	**D08MA4**	1400	5,1	2,0	Y	0,81	3,4	1,6	1,4	1,7	0,00115
1,1	60%	**D08LA4**	1400	7,5	2,8	Y	0,82	3,3	1,5	1,4	1,7	0,0015
1,5	60%	**D09SA4**	1400	10,2	3,6	Y	0,84	3,9	1,7	1,5	2,0	0,00245
2,2	60%	**D09LA4**	1400	15	5,0	Y	0,86	3,9	1,6	1,5	1,9	0,0032
3,0	60%	**D09XA4**	1400	20	6,8	Y	0,86	3,4	1,7	1,6	1,9	0,0038
4,0	60%	**D11SA4**	1420	26,5	8,9	Δ	0,85	4,0	1,6	1,4	2,0	0,0081
5,5	60%	**D11MA4**	1420	37	11,7	Δ	0,87	4,3	1,5	1,5	2,0	0,0105
7,5	60%	**D11LA4**	1420	50	16	Δ	0,87	4,3	1,8	1,7	2,1	0,014
9,5	60%	**D13MA4**	1420	64	19	Δ	0,87	4,9	1,9	1,6	2,2	0,029
11	60%	**D13LA4**	1420	72	22	Δ	0,84	5,5	2,4	2,1	2,5	0,0345
13,5	60%	**D16MA4**	1460	88	28	Δ	0,84	5,6	2,1	1,6	2,0	0,057
18,5	60%	**D16LA4**	1460	121	38	Δ	0,84	5,1	1,9	1,6	2,1	0,076
22	60%	**D16XA4**	1460	144	46	Δ	0,84	5,4	2,1	1,3	2,0	0,087
30	60%	**D18LA4**	1460	196	58	Δ	0,89	4,5	1,8	1,5	1,7	0,16
37	60%	**D18XA4**	1460	240	74	Δ	0,85	5,5	2,5	2,0	2,3	0,195

P	Rated output at 50 Hz mains frequency, S3/S6 duty
DC	Permissible duty cycle
n	Typical rated rotor shaft speed at 50 Hz Mains frequency
M_N	Rated shaft torque
I_N	Rated current at 400 V (for other special voltages, multiply by the inverse voltage ratio to convert the current at 400 V to the current at the desired voltage)
cos φ	Power factor
I_A/I_N	Relative starting current
M_A/M_N	Relative starting torque
M_S/M_N	Relative pull-up torque
M_K/M_N	Relative breakdown torque
J_{rot}	Rotor moment of inertia

The standard motor winding configuration is for 400 V / 50 Hz.

See Bauer Publication SD4xx for additional information.

4/2-pole Δ/YY motors for continuous running duty (S1) and 50 Hz mains frequency

P kW	**Type**	n 1/min	M_N Nm	I_N (400 V) A	cos φ	I_A/I_N	M_A/M_N	M_S/M_N	M_K/M_N	J_{rot} kgm²
0,03 / 0,06	**D04LA42**	1350 / 2700	0,210 / 0,210	0,230 / 0,250	0,56 / 0,67	2,2 / 3,1	3,4 / 3,1	3,4 / 3,1	3,6 / 3,3	0,000175
0,04 / 0,08	**D04LA42**	1350 / 2700	0,280 / 0,280	0,250 / 0,280	0,60 / 0,75	2,0 / 2,8	3,0 / 2,1	3,0 / 2,1	3,3 / 2,2	0,000175
0,06 / 0,12	**D05LA42**	1350 / 2700	0,420 / 0,420	0,450 / 0,450	0,50 / 0,75	2,8 / 3,3	3,1 / 2,0	3,0 / 1,9	3,8 / 2,6	0,000295
0,08 / 0,16	**D05LA42**	1350 / 2700	0,56 / 0,56	0,50 / 0,50	0,55 / 0,75	2,8 / 3,3	3,1 / 1,8	2,7 / 1,7	3,4 / 2,3	0,000295
0,06 / 0,12	**D06LA42**	1350 / 2700	0,420 / 0,420	0,450 / 0,450	0,50 / 0,75	2,8 / 3,3	3,1 / 2,0	3,0 / 1,9	3,8 / 2,6	0,000295
0,08 / 0,16	**D06LA42**	1350 / 2700	0,56 / 0,56	0,50 / 0,50	0,55 / 0,75	2,8 / 3,3	2,8 / 1,8	2,7 / 1,7	3,4 / 2,3	0,000295
0,11 / 0,22	**D06LA42**	1350 / 2700	0,77 / 0,77	0,68 / 0,68	0,55 / 0,75	2,8 / 3,3	2,8 / 1,8	2,7 / 1,7	3,4 / 2,3	0,000295
0,16 / 0,32	**D06LA42**	1350 / 2700	1,13 / 1,13	0,90 / 0,90	0,57 / 0,80	2,8 / 3,3	2,6 / 1,7	2,5 / 1,6	3,1 / 2,1	0,000295
0,2 / 0,4	**D07LA42**	1400 / 2800	1,35 / 1,37	1,10 / 1,15	0,58 / 0,81	2,9 / 3,6	2,8 / 1,6	2,7 / 1,4	3,0 / 2,0	0,000385
0,28 / 0,56	**D08MA42**	1400 / 2800	1,90 / 1,90	1,20 / 1,75	0,61 / 0,81	3,4 / 2,9	2,3 / 1,5	2,3 / 1,4	3,0 / 1,9	0,00115
0,4 / 0,8	**D08LA42**	1400 / 2800	2,7 / 2,7	1,53 / 1,91	0,62 / 0,90	4,7 / 5,1	2,7 / 1,8	2,4 / 1,7	3,1 / 2,1	0,0015
0,5 / 1,0	**D09SA42**	1400 / 2800	3,4 / 3,4	1,65 / 2,4	0,71 / 0,91	5,1 / 4,5	2,9 / 1,9	2,9 / 1,9	3,6 / 2,4	0,00245
0,7 / 1,4	**D09SA42**	1400 / 2800	4,8 / 4,8	2,1 / 3,3	0,71 / 0,93	4,7 / 4,1	2,5 / 1,6	2,5 / 1,6	3,1 / 2,0	0,00245
1,0 / 2,0	**D09LA42**	1400 / 2800	6,8 / 6,8	2,9 / 4,7	0,72 / 0,94	4,7 / 4,1	2,5 / 1,6	2,5 / 1,6	3,1 / 2,0	0,0032
1,2 / 2,4	**D09XA42**	1400 / 2800	8,2 / 8,1	3,8 / 5,7	0,65 / 0,87	6,2 / 3,0	2,5 / 1,8	2,5 / 1,8	3,1 / 2,3	0,0038
1,4 / 2,8	**D11SA42**	1420 / 2840	9,4 / 9,4	3,6 / 6,2	0,74 / 0,90	6,4 / 4,5	3,0 / 1,7	2,6 / 1,5	4,1 / 2,8	0,0081
2,0 / 4,0	**D11MA42**	1420 / 2840	13,5 / 13,4	5,5 / 9,1	0,70 / 0,90	6,7 / 5,4	3,1 / 2,1	2,7 / 1,6	3,7 / 2,5	0,0105
2,5 / 5,0	**D11LA42**	1420 / 2840	16,8 / 16,8	5,5 / 10	0,79 / 0,92	5,6 / 4,6	2,8 / 1,8	2,7 / 1,7	3,7 / 2,6	0,014
3,5 / 7,0	**D13MA42**	1420 / 2840	23 / 23	8,2 / 14,8	0,76 / 0,91	6,8 / 5,2	3,4 / 2,0	2,8 / 1,8	3,8 / 2,7	0,029
4,5 / 9,0	**D13LA42**	1420 / 2840	30,2 / 30	10,5 / 19	0,76 / 0,91	6,8 / 5,5	3,2 / 1,9	2,6 / 1,7	3,5 / 2,5	0,0345
5,5 / 11	**D16MA42**	1460 / 2920	36 / 36	13,4 / 24	0,73 / 0,91	6,7 / 5,2	2,8 / 1,7	2,2 / 1,2	3,2 / 2,3	0,057
7,0 / 14	**D16LA42**	1460 / 2920	45 / 45	15,5 / 28,5	0,78 / 0,92	7,2 / 5,5	3,1 / 2,1	2,5 / 1,4	3,3 / 2,6	0,076
9,0 / 18	**D16XA42**	1460 / 2920	58 / 58	19,1 / 36,5	0,79 / 0,92	7,9 / 5,8	2,8 / 1,8	2,2 / 1,2	3,1 / 2,2	0,087
12,5 / 25	**D18LA42**	1460 / 2920	81 / 81	28,5 / 49,5	0,77 / 0,89	8,5 / 7,0	3,9 / 2,8	3,3 / 1,9	3,8 / 3,0	0,16
16 / 32	**D18XA42**	1460 / 2920	104 / 104	38,5 / 66	0,77 / 0,89	7,8 / 6,5	3,7 / 2,6	3,1 / 1,8	3,6 / 2,8	0,195

P	Rated output at 50 Hz mains frequency
n	Typical rated rotor shaft speed at 50 Hz Mains frequency
M_N	Rated torque at rotor shaft
I_N	Rated current at 400 V Δ/YY (for other special voltages, multiply by the inverse voltage ratio to convert the current at 400 V to the current at the desired voltage)
cos φ	Power factor
I_A/I_N	Relative starting current
M_A/M_N	Relative starting torque
M_S/M_N	Relative pull-up torque
M_K/M_N	Relative breakdown torque
J_{rot}	Rotor moment of inertia

8/4-pole Δ/YY motors for continuous running duty (S1) and 50 Hz mains frequency

P kW	Type	n 1/min	M_N Nm	I_N (400 V) A	cos φ	I_A/I_N	M_A/M_N	M_S/M_N	M_K/M_N	J_{rot} kgm²
0,03 / 0,06	**D05LA84**	680 / 1350	0,410 / 0,420	0,300 / 0,280	0,52 / 0,71	1,6 / 2,6	2,7 / 1,9	1,6 / 1,7	1,6 / 1,7	0,000295
0,03 / 0,06	**D06LA84**	680 / 1350	0,410 / 0,420	0,300 / 0,280	0,52 / 0,71	1,6 / 2,6	2,7 / 1,9	1,6 / 1,7	1,6 / 1,7	0,000295
0,04 / 0,08	**D06LA84**	680 / 1350	0,54 / 0,56	0,480 / 0,400	0,52 / 0,66	1,4 / 2,2	2,6 / 2,1	1,6 / 1,7	1,6 / 1,7	0,000295
0,06 / 0,12	**D07LA84**	680 / 1350	0,84 / 0,85	0,70 / 0,60	0,52 / 0,66	1,7 / 2,8	3,2 / 1,7	3,2 / 1,5	3,3 / 2,1	0,000385
0,06 / 0,12	**D08LA84**	700 / 1400	0,81 / 0,81	0,50 / 0,50	0,61 / 0,83	2,8 / 3,7	3,1 / 2,3	3,1 / 2,3	3,7 / 3,1	0,0025
0,08 / 0,16	**D08LA84**	700 / 1400	1,08 / 1,09	0,62 / 0,62	0,61 / 0,83	2,8 / 3,7	3,0 / 2,2	3,0 / 2,2	3,5 / 3,0	0,0025
0,11 / 0,22	**D08LA84**	700 / 1400	1,49 / 1,5	0,80 / 0,80	0,61 / 0,83	2,8 / 3,7	2,8 / 2,1	2,8 / 2,1	3,3 / 2,8	0,0025
0,14 / 0,28	**D08LA84**	700 / 1400	1,90 / 1,91	1,00 / 1,00	0,61 / 0,83	2,8 / 3,7	2,8 / 2,1	2,8 / 2,1	3,3 / 2,8	0,0025
0,2 / 0,4	**D08LA84**	700 / 1400	2,7 / 2,7	1,10 / 1,30	0,55 / 0,77	2,8 / 3,7	2,3 / 1,7	2,3 / 1,7	2,7 / 2,3	0,0025
0,25 / 0,5	**D09XC84**	700 / 1400	3,3 / 3,3	1,40 / 1,40	0,48 / 0,77	2,9 / 5,0	2,7 / 2,0	2,7 / 2,1	3,1 / 2,7	0,006
0,28 / 0,56	**D09XC84**	700 / 1400	3,8 / 3,8	1,40 / 1,50	0,57 / 0,80	2,9 / 4,9	2,4 / 1,8	2,4 / 1,9	2,8 / 2,4	0,006
0,4 / 0,8	**D09XC84**	700 / 1400	5,4 / 5,4	1,95 / 2,4	0,55 / 0,79	2,8 / 4,2	2,3 / 1,7	2,3 / 1,8	2,7 / 2,3	0,006
0,5 / 1,0	**D09XC84**	700 / 1400	6,8 / 6,8	2,4 / 2,6	0,55 / 0,81	2,6 / 4,0	2,2 / 1,6	2,2 / 1,6	2,5 / 2,2	0,006
0,8 / 1,6	**D11LC84**	710 / 1420	10,7 / 10,7	3,0 / 4,2	0,63 / 0,88	3,5 / 4,3	2,2 / 1,9	2,2 / 1,7	2,8 / 2,7	0,0215
1,1 / 2,2	**D11LC84**	710 / 1420	14,7 / 14,7	4,0 / 5,0	0,58 / 0,85	3,9 / 5,7	2,3 / 2,1	2,3 / 1,7	2,7 / 2,5	0,0215
1,6 / 3,2	**D11LC84**	710 / 1420	21,5 / 21,5	6,0 / 7,6	0,59 / 0,84	3,7 / 5,1	2,2 / 1,8	2,1 / 1,5	2,6 / 2,3	0,0215
2,2 / 4,4	**D13LC84**	710 / 1420	29 / 29	7,2 / 9,5	0,60 / 0,87	4,3 / 5,4	2,1 / 1,7	2,1 / 1,4	2,9 / 2,8	0,046
2,8 / 5,6	**D13LC84**	710 / 1420	37,5 / 37,5	9,4 / 12,3	0,60 / 0,86	4,3 / 5,4	2,1 / 1,7	2,1 / 1,4	2,9 / 2,8	0,046
3,5 / 7,0	**D16MA84**	730 / 1460	45,8 / 45,5	13,9 / 15,6	0,59 / 0,84	3,3 / 4,9	2,1 / 1,8	1,8 / 1,4	2,1 / 2,2	0,057
5,0 / 10	**D16LA84**	730 / 1460	65 / 65	17,5 / 20,5	0,57 / 0,87	3,6 / 5,6	2,1 / 1,8	1,9 / 1,4	2,1 / 2,2	0,076
7,0 / 14	**D16XA84**	730 / 1460	91 / 91	24,5 / 29	0,60 / 0,84	3,3 / 5,2	2,1 / 1,9	2,0 / 1,6	2,1 / 2,4	0,087
8,0 / 16	**D18LA84**	730 / 1460	105 / 104	24 / 32,5	0,60 / 0,86	3,7 / 5,5	2,2 / 2,2	1,8 / 1,8	1,9 / 2,1	0,16
10 / 20	**D18XA84**	730 / 1460	130 / 130	30 / 41	0,60 / 0,86	3,7 / 5,5	2,2 / 2,2	1,8 / 1,8	1,9 / 2,1	0,195

P	Rated output at 50 Hz mains frequency
n	Typical rated rotor shaft speed at 50 Hz Mains frequency
M_N	Rated torque at rotor shaft
I_N	Rated current at 400 V Δ/YY (for other special voltages, multiply by the inverse voltage ratio to convert the current at 400 V to the current at the desired voltage)
cos φ	Power factor
I_A/I_N	Relative starting current
M_A/M_N	Relative starting torque
M_A/M_N	Relative pull-up torque
M_K/M_N	Relative breakdown torque
J_{rot}	Rotor moment of inertia

Motors

Technical data of the 50 Hz motors

8/2-pole Y/Y motors for intermittent periodic duty S3 25/75% and 50 Hz mains frequency

P kW	ED	**Type**	n 1/min	M_N Nm	I_N (400 V) A	cos φ	I_A/I_N	M_A/M_N	M_S/M_N	M_K/M_N	J_{rot} kgm^2
0,04 / 0,16	25/75%	**D05LA82**	680 / 2700	0,56 / 0,56	0,400 / 0,80	0,63 / 0,75	1,6 / 3,2	1,9 / 2,2	1,9 / 2,1	2,0 / 2,3	0,000295
0,05 / 0,20	25/75%	**D06LA82**	680 / 2700	0,70 / 0,70	0,51 / 1,02	0,63 / 0,75	1,4 / 2,8	1,7 / 2,0	1,7 / 1,9	1,8 / 2,1	0,000295
0,063 / 0,25	25/75%	**D07LA82**	650 / 2840	0,87 / 0,87	0,60 / 1,20	0,69 / 0,62	1,4 / 2,6	1,6 / 1,4	1,6 / 1,4	1,8 / 2,7	0,000385
0,071 / 0,28	25/75%	**D07LA82**	650 / 2840	0,99 / 0,98	0,65 / 1,40	0,69 / 0,68	1,4 / 2,6	1,5 / 1,3	1,5 / 1,3	1,7 / 2,6	0,000385
0,063 / 0,25	25/75%	**D08LA82**	700 / 2800	0,85 / 0,85	0,55 / 0,70	0,55 / 0,87	2,8 / 4,0	2,4 / 2,6	2,4 / 2,5	2,8 / 3,0	0,0015
0,09 / 0,36	25/75%	**D08LA82**	700 / 2800	1,22 / 1,22	0,70 / 1,05	0,60 / 0,92	2,9 / 4,5	2,0 / 2,6	2,0 / 2,5	2,4 / 2,9	0,0015
0,12 / 0,5	25/75%	**D08LA82**	700 / 2800	1,70 / 1,70	0,95 / 1,43	0,60 / 0,92	2,9 / 4,5	2,0 / 2,6	2,0 / 2,5	2,4 / 2,9	0,0015
0,16 / 0,63	25/75%	**D08LA82**	700 / 2800	2,1 / 2,1	1,20 / 1,45	0,63 / 0,90	2,0 / 4,6	1,8 / 2,1	1,8 / 2,0	2,2 / 2,4	0,0015
0,25 / 1,0	25/75%	**D09XA82**	700 / 2800	3,4 / 3,4	1,30 / 2,3	0,62 / 0,90	2,2 / 5,2	1,9 / 2,3	1,9 / 2,3	2,0 / 2,6	0,0038
0,36 / 1,4	25/75%	**D09XA82**	700 / 2800	4,9 / 4,8	2,1 / 3,3	0,57 / 0,87	2,0 / 4,5	1,9 / 2,1	1,9 / 2,1	2,0 / 2,4	0,0038
0,45 / 1,8	25/75%	**D09XA82**	700 / 2800	6,1 / 6,1	2,4 / 4,3	0,65 / 0,89	2,0 / 4,3	1,7 / 2,0	1,7 / 2,0	2,0 / 2,5	0,0038
0,56 / 2,2	25/75%	**D11LA82**	710 / 2840	7,5 / 7,3	2,3 / 4,7	0,60 / 0,94	3,2 / 4,9	1,9 / 2,9	1,9 / 2,4	2,2 / 2,9	0,014
0,71 / 2,8	25/75%	**D11LA82**	710 / 2840	9,5 / 9,4	2,8 / 5,6	0,58 / 0,94	2,5 / 4,7	1,9 / 2,3	1,9 / 2,0	2,1 / 2,4	0,014
0,90 / 3,6	25/75%	**D11LA82**	710 / 2840	12,1 / 12,1	3,5 / 7,9	0,58 / 0,94	2,5 / 4,5	1,8 / 2,0	1,8 / 1,8	2,0 / 2,1	0,014
1,10 / 4,5	25/75%	**D13LA82**	710 / 2840	14,7 / 15,1	4,0 / 10,1	0,59 / 0,90	2,8 / 5,4	1,8 / 2,5	1,8 / 1,8	2,3 / 2,7	0,0345
1,25 / 5,0	25/75%	**D13LA82**	710 / 2840	16,8 / 16,8	4,5 / 11,5	0,59 / 0,88	2,9 / 5,4	1,6 / 2,3	1,6 / 1,8	2,1 / 2,7	0,0345
1,6 / 6,3	25/75%	**D16XA82**	730 / 2920	20 / 20,5	7,6 / 13,5	0,48 / 0,88	3,6 / 6,5	2,4 / 3,0	2,2 / 2,1	2,7 / 3,0	0,087
2,0 / 8,0	25/75%	**D16XA82**	730 / 2920	25,5 / 26	9,5 / 17	0,50 / 0,89	3,6 / 6,1	2,4 / 3,0	2,1 / 2,0	2,7 / 3,0	0,087
2,8 / 11	25/75%	**D16XA82**	730 / 2920	36,6 / 36	11,5 / 24	0,53 / 0,91	3,0 / 5,9	1,8 / 2,9	1,6 / 2,0	1,9 / 2,8	0,087
3,6 / 14	25/75%	**D18XA82**	730 / 2920	47 / 45,5	13,6 / 30,5	0,55 / 0,91	3,3 / 4,9	1,7 / 2,2	1,6 / 1,5	2,1 / 2,4	0,195
4,0 / 16	25/75%	**D18XA82**	730 / 2920	52 / 52	15,1 / 34,5	0,55 / 0,91	3,3 / 4,9	1,7 / 2,2	1,6 / 1,5	2,1 / 2,4	0,195
5,0 / 20	25/75%	**D18XA82**	730 / 2920	65 / 65	18,8 / 43	0,55 / 0,91	3,3 / 4,9	1,7 / 2,2	1,6 / 1,5	2,1 / 2,4	0,195

P	Rated output at 50 Hz mains frequency and S3 25/75% duty
n	Typical rated rotor shaft speed at 50 Hz Mains frequency
M_N	Rated torque at rotor shaft
I_N	Rated current at 400 V Y/Y (for other special voltages, multiply by the inverse voltage ratio to convert the current at 460 V to the current at the desired voltage)
cos φ	Power factor
I_A/I_N	Relative starting current
M_A/M_N	Relative starting torque
M_S/M_N	Relative pull-up torque
M_K/M_N	Relative breakdown torque
J_{rot}	Rotor moment of inertia

12/2 pole motors Y/Y for periodic duty S3-25/75%, Mains Frequency 50 Hz

P kW	ED	Type	n 1/min	M_N Nm	I_N (400 V) A	cos φ	I_A/I_N	M_A/M_N	M_S/M_N	M_K/M_N	J_{rot} kgm²
0,045 / 0,28	25/75%	**D08LA122**	470 / 2800	0,92 / 0,95	0,55 / 0,86	0,70 / 0,90	1,4 / 4,5	1,9 / 2,4	1,9 / 2,4	1,9 / 2,7	0,0015
0,063 / 0,4	25/75%	**D08LA122**	470 / 2800	1,29 / 1,36	0,66 / 1,10	0,70 / 0,90	1,4 / 4,5	1,7 / 2,2	1,7 / 2,2	1,7 / 2,4	0,0015
0,09 / 0,56	25/75%	**D08LA122**	470 / 2800	1,85 / 1,91	1,00 / 1,45	0,63 / 0,89	1,4 / 4,1	1,7 / 2,1	1,7 / 2,3	1,8 / 2,4	0,0015
0,11 / 0,71	25/75%	**D09XA122**	470 / 2800	2,3 / 2,4	1,05 / 1,60	0,59 / 0,88	1,5 / 5,5	1,7 / 2,7	1,7 / 2,6	1,8 / 3,3	0,0038
0,16 / 1,0	25/75%	**D09XA122**	470 / 2800	3,2 / 3,4	1,70 / 2,4	0,62 / 0,89	1,5 / 5,5	1,8 / 2,6	1,8 / 2,5	1,8 / 3,3	0,0038
0,20 / 1,25	25/75%	**D09XA122**	470 / 2800	4,1 / 4,2	2,0 / 3,0	0,62 / 0,89	1,5 / 5,0	1,7 / 2,4	1,7 / 2,3	1,7 / 3,1	0,0038
0,25 / 1,6	25/75%	**D11LA122**	470 / 2840	5,1 / 5,3	2,3 / 3,4	0,53 / 0,95	1,6 / 4,9	1,7 / 2,6	1,7 / 2,4	2,0 / 2,8	0,014
0,32 / 2,0	25/75%	**D11LA122**	470 / 2840	6,5 / 6,7	2,9 / 4,0	0,53 / 0,94	1,6 / 4,7	1,7 / 2,5	1,7 / 2,2	2,0 / 2,7	0,014
0,45 / 2,8	25/75%	**D11LA122**	470 / 2840	9,2 / 9,4	4,5 / 5,6	0,52 / 0,94	1,6 / 4,7	1,5 / 2,3	1,5 / 2,0	1,8 / 2,4	0,014
0,63 / 4,0	25/75%	**D13LA122**	470 / 2840	12,9 / 13,4	4,1 / 8,6	0,45 / 0,95	1,6 / 5,6	1,6 / 2,4	1,6 / 1,8	1,8 / 2,7	0,0345
0,80 / 5,0	25/75%	**D13LA122**	470 / 2840	16,3 / 16,8	6,3 / 11,3	0,41 / 0,92	1,7 / 5,3	1,5 / 2,7	1,5 / 1,9	2,0 / 2,9	0,0345
1,0 / 6,3	25/75%	**D16XA122**	490 / 2920	19,6 / 20	8,0 / 13,4	0,35 / 0,90	2,2 / 6,3	1,9 / 2,7	1,9 / 1,7	2,4 / 2,8	0,087
1,25 / 8,0	25/75%	**D16XA122**	490 / 2920	24,5 / 26	9,9 / 16,9	0,35 / 0,90	2,2 / 6,3	1,9 / 2,7	1,9 / 1,7	2,4 / 2,8	0,087
1,6 / 10	25/75%	**D16XA122**	490 / 2920	30,5 / 32	10,5 / 21	0,40 / 0,92	1,9 / 5,4	1,6 / 2,4	1,6 / 1,4	2,1 / 2,4	0,087
2,4 / 14	25/75%	**D18XA122**	490 / 2920	47 / 45	16,6 / 31	0,39 / 0,91	1,8 / 4,3	1,6 / 2,6	1,7 / 2,0	1,9 / 2,6	0,195
2,5 / 16	60/60%	**D18XA122**	490 / 2920	49 / 52	15,5 / 31	0,46 / 0,92	1,8 / 5,4	1,6 / 2,5	1,4 / 1,5	1,6 / 2,6	0,195
2,8 / 18	10/40%	**D18XA122**	490 / 2920	55 / 58	19,3 / 39,5	0,39 / 0,91	1,8 / 4,3	1,6 / 2,6	1,7 / 2,0	1,9 / 2,6	0,195

P	Nominal Powers for 50 Hz mains frequency, Duty S3-25/75%
n	Guideline values for rated speeds at the rotor shaft at 50 Hz line frequency
M_N	Rated torques at the rotor shaft
I_N	Rated currents 400 V Δ/YY (currents can be converted as inverse ratios of voltages from 400 V to the desired special voltage)
cos φ	Power factors
I_A/I_N	Relative starting currents
M_A/M_N	Relative breakaway torques
M_A/M_N	Relative pull-up torques
M_K/M_N	Relative beakdown torques
J_{rot}	Mass moment of inertia of the rotor

4-pole IE1 motors for continuous running duty S1 and 60 Hz mains frequency
For use after 16 June 2011 only in non-EU countries, except for brake motors

P_N	Type	n_N	M_N	I_N	Connec-tion	cosφ	η	η	η	I_A/I_N	M_A/M_N	M_S/M_N	M_K/M_N	J_{rot}	Brake
kW		1/min	Nm	460 V A			(100% - Last) %	(75% - Last) %	(50% - Last) %					kgm^2	
0,03	**D04LA4**	1620	0,17	0,18	Y	0,60	-	-	-	2,4	2,9	2,9	3,3	0,000175	
0,04	**D04LA4**	1620	0,23	0,18	Y	0,60	-	-	-	2,4	2,2	2,2	2,5	0,000175	
0,06	**D04LA4**	1620	0,35	0,28	Y	0,60	-	-	-	2,5	2,3	2,3	2,7	0,000175	E003
0,09	**D04LA4**	1620	0,52	0,40	Y	0,69	-	-	-	2,7	2,4	2,4	2,9	0,000175	
0,12	**D04LA4**	1620	0,7	0,42	Y	0,73	-	-	-	2,5	1,9	1,9	2,1	0,000175	
0,06	**D05LA4**	1620	0,35	0,32	Y	0,72	-	-	-	4,1	4,1	3,8	4,1	0,000295	
0,09	**D05LA4**	1620	0,52	0,35	Y	0,70	-	-	-	4,3	3,3	3,1	3,3	0,000295	
0,12	**D05LA4**	1620	0,7	0,38	Y	0,73	-	-	-	3,7	2,4	2,3	2,4	0,000295	E003
0,18	**D05LA4**	1620	1,06	0,58	Y	0,70	-	-	-	3,7	2,5	2,4	2,6	0,000295	
0,25	**D05LA4**	1620	1,45	0,80	Y	0,69	-	-	-	3,6	2,5	2,4	2,5	0,000295	
0,06	**D06LA4**	1620	0,35	0,32	Y	0,72	-	-	-	4,1	4,1	3,8	4,1	0,000295	
0,09	**D06LA4**	1620	0,52	0,35	Y	0,70	-	-	-	4,3	3,3	3,1	3,3	0,000295	
0,12	**D06LA4**	1620	0,7	0,38	Y	0,73	-	-	-	3,7	2,4	2,3	2,4	0,000295	E003
0,18	**D06LA4**	1620	1,06	0,58	Y	0,70	-	-	-	3,7	2,5	2,4	2,6	0,000295	
0,25	**D06LA4**	1620	1,45	0,80	Y	0,69	-	-	-	3,6	2,5	2,4	2,5	0,000295	
0,3	**D07LA4**	1620	1,76	1,20	Y	0,60	-	-	-	3,0	3,0	3,0	3,1	0,000385	E003
0,37	**D07LA4**	1620	2,1	1,26	Y	0,66	-	-	-	2,8	2,4	2,4	2,4	0,000385	E004
0,55	**DSE08MA4**	1720	3,1	1,28	Y	0,72	75,4	75,2	73,0	4,6	2,3	2,2	2,7	0,00115	
0,75	**DSE08LA4**	1720	4,15	1,75	Y	0,69	78,2	77,0	72,7	4,8	2,5	2,4	2,9	0,00150	ES(X)010
1,1	**DSE08XA4**	1720	6,2	2,4	Y	0,71	79,0	77,0	73,0	4,1	2,2	2,0	2,4	0,00170	
1,1	**DSE09SA4**	1740	6,05	2,3	Y	0,72	83,6	82,6	79,2	6,5	3,6	3,3	4,0	0,00245	ES(X)010
1,5	**DSE09LA4**	1740	8,25	3,1	Y	0,72	84,2	83,5	80,4	6,5	3,4	3,1	4,0	0,00320	ES(X)027
2,2	**DSE09XA4**	1720	12,2	4,3	Y	0,76	84,9	85,0	83,0	6,2	3,3	3,0	3,6	0,00380	
3	**DSE11SA4**	1740	16,4	5,5	D	0,78	86,7	86,6	84,4	6,9	3,0	2,7	3,8	0,00810	ES(X)027
4	**DSE11MA4**	1740	21,9	7,2	D	0,81	86,2	86,4	84,9	6,9	3,3	2,7	3,7	0,01050	ES(X)040
5,5	**DSE11LA4**	1740	30,2	9,7	D	0,81	87,7	87,8	86	7,6	3,3	2,9	4,0	0,01400	ES(X)070
7,5	**DSE13MA4**	1760	41	13,3	D	0,80	89,1	89,1	87,6	7,6	3,4	2,9	3,6	0,02900	ES(X)040
9,5	**DSE13LA4**	1760	52	16,6	D	0,81	88,4	88,7	87,5	7,3	3,4	2,9	3,4	0,03450	ES(X)070 ES(X)125
11	**DSE16MA4**	1760	59	19,3	D	0,80	88,7	88,8	87,5	6,9	2,9	2,2	3,0	0,05700	ES(X)125
15	**DSE16LA4**	1760	81	25,3	D	0,83	89,6	89,8	88,8	6,7	2,7	2,3	3,1	0,07600	ES(X)200
18,5	**DSE16XA4**	1760	100	32	D	0,81	90,5	89,7	88,7	6,7	2,8	2,4	3,1	0,08700	ZS(X)300
22	**DSE18LA4**	1760	120	36	D	0,85	91,1	91,2	89,9	7,4	3,3	2,7	3,1	0,16000	ES(X)250
30	**DSE18XA4**	1760	162	49	D	0,83	91,8	91,8	90,8	7,4	3,4	2,6	3,1	0,19500	ZS(X)500

P	Rated torque at 60 Hz mains frequency
n	Typical rated rotor shaft speed at 60 Hz Mains frequency
M_N	Rated torque at rotor shaft
I_N	Rated current at 460 V (for other special voltages, multiply by the inverse voltage ratio to convert the current at 460 V to the current at the desired voltage)
cos φ	Power factor
I_A/I_N	Relative starting current
M_A/M_N	Relative starting torque
M_S/M_N	Relative pull-up torque
M_K/M_N	Relative breakdown torque
J_{rot}	Rotor moment of inertia
η	Efficiency with different loads
Brake	Brake configuration (see Section 16)

The standard motor winding configuration is for 460 V / 60 Hz.

All motors designed for thermal class F are suitable for operation over the voltage range 440–480 V or 460 V +/- 10%.
Note: the current, power factor and torque vary depending on the deviation from 460 V.

See Bauer Special Publication SD4xx for additional information.

4-pole motors for continuous operation S1, line frequency 60 Hz

P_N	Type	n_N	M_N	I_N	Connec-tion	cosφ	η	η	η	I_A/I_N	M_A/M_N	M_S/M_N	M_K/M_N	J_{rot}	Brake
kW		1/min	Nm	460 V A			(100% - Last) %	(75% - Last) %	(50% - Last) %					kgm^2	
0,03	**D04LA4**	1620	0,17	0,18	Y	0,60	-	-	-	2,4	2,9	2,9	3,3	0,000175	
0,04	**D04LA4**	1620	0,23	0,18	Y	0,60	-	-	-	2,4	2,2	2,2	2,5	0,000175	
0,06	**D04LA4**	1620	0,35	0,28	Y	0,60	-	-	-	2,5	2,3	2,3	2,7	0,000175	E003
0,09	**D04LA4**	1620	0,52	0,40	Y	0,69	-	-	-	2,7	2,4	2,4	2,9	0,000175	
0,12	**D04LA4**	1620	0,7	0,42	Y	0,73	-	-	-	2,5	1,9	1,9	2,1	0,000175	
0,06	**D05LA4**	1620	0,35	0,32	Y	0,72	-	-	-	4,1	4,1	3,8	4,1	0,000295	
0,09	**D05LA4**	1620	0,52	0,35	Y	0,70	-	-	-	4,3	3,3	3,1	3,3	0,000295	
0,12	**D05LA4**	1620	0,7	0,38	Y	0,73	-	-	-	3,7	2,4	2,3	2,4	0,000295	E003
0,18	**D05LA4**	1620	1,06	0,58	Y	0,70	-	-	-	3,7	2,5	2,4	2,6	0,000295	
0,25	**D05LA4**	1620	1,45	0,80	Y	0,69	-	-	-	3,6	2,5	2,4	2,5	0,000295	
0,06	**D06LA4**	1620	0,35	0,32	Y	0,72	-	-	-	4,1	4,1	3,8	4,1	0,000295	
0,09	**D06LA4**	1620	0,52	0,35	Y	0,70	-	-	-	4,3	3,3	3,1	3,3	0,000295	
0,12	**D06LA4**	1620	0,7	0,38	Y	0,73	-	-	-	3,7	2,4	2,3	2,4	0,000295	E003
0,18	**D06LA4**	1620	1,06	0,58	Y	0,70	-	-	-	3,7	2,5	2,4	2,6	0,000295	
0,25	**D06LA4**	1620	1,45	0,80	Y	0,69	-	-	-	3,6	2,5	2,4	2,5	0,000295	
0,3	**D07LA4**	1620	1,76	1,20	Y	0,60	-	-	-	3,0	3,0	3,0	3,1	0,000385	E003
0,37	**D07LA4**	1620	2,1	1,26	Y	0,66	-	-	-	2,8	2,4	2,4	2,4	0,000385	E004
0,75	**DHE08XA4**	1720	4,1	1,60	Y	0,72	82,5	81,0	78,0	5,1	2,5	2,4	3,0	0,0017	ES(X)010
0,75	**DHE09SA4**	1740	4,1	1,60	Y	0,70	83,7	82,4	78,3	7,3	3,4	3,0	4,0	0,00245	
1,1	**DHE09LA4**	1740	6,0	2,25	Y	0,73	84,8	83,8	80,4	7,3	3,6	3,3	4,3	0,0032	ES(X)010
1,5	**DHE09XA4**	1740	8,2	2,95	Y	0,74	85,8	85,2	82,5	7,2	3,7	3,5	4,3	0,0038	ES(X)027
2,2	**DHE09XA4C**	1760	12	4,0	Y	0,79	87,5	87,5	86,0	6,0	2,1	2,0	3,1	0,0053	
2,2	**DHE11SA4**	1760	12	4,0	Y	0,78	87,7	87,2	84,1	8,3	3,5	3,1	4,3	0,0081	ES(X)027
3	**DHE11MA4**	1760	16,5	5,5	D	0,78	87,6	87,2	83,9	7,9	3,9	3,1	4,4	0,0105	ES(X)040
4	**DHE11LA4**	1760	21,5	7,3	D	0,77	88,3	87,5	84,6	9,3	4,1	3,6	4,9	0,0140	ES(X)070
5,5	**DHE11LA4C**	1760	30	9,5	D	0,81	89,6	89,2	88,3	8,2	2,4	1,8	4,1	0,0162	
5,5	**DHE13MA4**	1760	30	9,7	D	0,80	89,7	89,3	87,1	8,5	3,8	3,3	4,0	0,0290	ES(X)040
7,5	**DHE13LA4**	1760	40,5	13,2	D	0,80	89,6	89,2	87,2	8,2	3,9	3,4	4,0	0,0345	ES(X)070 ES(X)125
9,5	**DHE16LA4**	1780	51	16,5	D	0,79	91,4	90,1		9,1	3,7	3,2	4,1	0,076	ES(X)125
11	**DHE16LA4**	1780	59	19,6	D	0,78	91,0	90,5	88,0	8,7	3,8	3,2	4,2	0,076	ES(X)200
15	**DHE16XA4**	1780	81	27	D	0,77	91,0	90,8	88,6	7,9	3,8	3,4	4,2	0,087	ZS(X)300
18,5	**DHE18LA4**	1780	100	31	D	0,82	92,5	91,2	89,1	8,7	3,9	3,3	3,6	0,160	ES(X)250
22	**DHE18XA4**	1780	118	38,5	D	0,79	92,5	92,0	89,0	9,5	4,6	3,6	4,3	0,195	ZS(X)500
30	**DHENF20LG4**	1780	160	46	D	0,87	93,9	93,9	93,2	8,3	2,3	1,9	3,3	0,310	-
37	**DHENF22SG4**	1780	198	56	D	0,88	94,6	94,6	93,9	8,4	2,2	1,6	3,0	0,53	-
45	**DHENF22MG4**	1780	240	67	D	0,89	94,5	94,5	93,9	8,4	2,0	1,6	2,5	0,58	
55	**DHENF25MG4**	1780	294	81	D	0,90	94,5	94,7	94,3	7,8	2,3	1,6	2,9	0,79	-
75	**DHENF28MG4**	1780	400	110	D	0,90	94,8	94,9	94,4	8,2	2,8	1,9	3,2	0,92	-

P	Rated output at 60 Hz line frequency
n	Guideline value for rated speed at the rotor shaft at 60 Hz line frequency
M_N	Rated torque at the rotor shaft
I_N	Rated current at 460 V (the current can be converted as inverse ratios of voltages from 460 V to the desired special voltage)
cos φ	Power factor
I_A/I_N	Relative starting current
M_A/M_N	Relative breakaway torque
M_S/M_N	Relative pull-up torque
M_K/M_N	Relative breakdown torque
J_{rot}	Mass moment of inertia of the rotor
Brake	recommended standard brake for normal requirements (see chapter 16)

Winding configuration for standard motors for 460 V / 60 Hz.

All motors are suitable for the voltage range 440…480V or 460V +/- 10% if executed in insulation class F.

Important: Current, power factor and torque change as voltage deviates from 460 V.

See Bauer special imprint SD4 for more information

Motors

Technical data of the 60 Hz motors

4-pole motors for intermittent periodic duty (S3/S6 75%) and 60 Hz mains frequency

P_N	Type	n_N	M_N	I_N	Connec-tion	cos φ	I_A/I_N	M_A/M_N	M_S/M_N	M_K/M_N	J_{rot}	Brake
kW		1/min	Nm	460V A							kgm^2	
0,03	**D04LA4**	1620	0,17	0,18	Y	0,60	2,4	2,9	2,9	3,3	0,000175	
0,04	**D04LA4**	1620	0,23	0,18	Y	0,60	2,4	2,2	2,2	2,5	0,000175	
0,06	**D04LA4**	1620	0,35	0,28	Y	0,60	2,5	2,3	2,3	2,7	0,000175	E003
0,09	**D04LA4**	1620	0,52	0,40	Y	0,69	2,7	2,4	2,4	2,9	0,000175	
0,12	**D04LA4**	1620	0,7	0,42	Y	0,73	2,5	1,9	1,9	2,1	0,000175	
0,06	**D05LA4**	1620	0,35	0,32	Y	0,72	4,1	4,1	3,8	4,1	0,000295	
0,09	**D05LA4**	1620	0,52	0,35	Y	0,70	4,3	3,3	3,1	3,3	0,000295	
0,12	**D05LA4**	1620	0,7	0,38	Y	0,73	3,7	2,4	2,3	2,4	0,000295	E003
0,18	**D05LA4**	1620	1,06	0,58	Y	0,70	3,7	2,5	2,4	2,6	0,000295	
0,25	**D05LA4**	1620	1,45	0,80	Y	0,69	3,6	2,5	2,4	2,5	0,000295	
0,06	**D06LA4**	1620	0,35	0,32	Y	0,72	4,1	4,1	3,8	4,1	0,000295	
0,09	**D06LA4**	1620	0,52	0,35	Y	0,70	4,3	3,3	3,1	3,3	0,000295	
0,12	**D06LA4**	1620	0,7	0,38	Y	0,73	3,7	2,4	2,3	2,4	0,000295	E003
0,18	**D06LA4**	1620	1,06	0,58	Y	0,70	3,7	2,5	2,4	2,6	0,000295	
0,25	**D06LA4**	1620	1,45	0,80	Y	0,69	3,6	2,5	2,4	2,5	0,000295	
0,3	**D07LA4**	1620	1,76	1,20	Y	0,60	3,0	3,0	3,0	3,1	0,000385	E003
0,37	**D07LA4**	1620	2,1	1,26	Y	0,66	2,8	2,4	2,4	2,4	0,000385	E004
0,55	**DSE08MA4**	1720	3,1	1,28	Y	0,72	4,6	2,3	2,2	2,7	0,00115	
0,75	**DSE08LA4**	1720	4,15	1,75	Y	0,69	4,8	2,5	2,4	2,9	0,00150	ES(X)010
1,1	**DSE08XA4**	1720	6,2	2,4	Y	0,71	4,1	2,2	2,0	2,4	0,00170	
1,1	**DSE09SA4**	1740	6,05	2,3	Y	0,72	6,5	3,6	3,3	4,0	0,00245	ES(X)010
1,5	**DSE09LA4**	1740	8,25	3,1	Y	0,72	6,5	3,4	3,1	4,0	0,00320	ES(X)027
2,2	**DSE09XA4**	1720	12,2	4,3	Y	0,76	6,2	3,3	3,0	3,6	0,00380	
3	**DSE11SA4**	1740	16,4	5,5	D	0,78	6,9	3,0	2,7	3,8	0,00810	ES(X)027
4	**DSE11MA4**	1740	21,9	7,2	D	0,81	6,9	3,3	2,7	3,7	0,01050	ES(X)040
5,5	**DSE11LA4**	1740	30,2	9,7	D	0,81	7,6	3,3	2,9	4,0	0,01400	ES(X)070
7,5	**DSE13MA4**	1760	41	13,3	D	0,80	7,6	3,4	2,9	3,6	0,02900	ES(X)040
9,5	**DSE13LA4**	1760	52	16,6	D	0,81	7,3	3,4	2,9	3,4	0,03450	ES(X)070 ES(X)125
11	**DSE16MA4**	1760	59	19,3	D	0,80	6,9	2,9	2,2	3,0	0,05700	ES(X)125
15	**DSE16LA4**	1760	81	25,3	D	0,83	6,7	2,7	2,3	3,1	0,07600	ES(X)200
18,5	**DSE16XA4**	1760	100	32	D	0,81	6,7	2,8	2,4	3,1	0,08700	ZS(X)300
22	**DSE18LA4**	1760	120	36	D	0,85	7,4	3,3	2,7	3,1	0,16000	ES(X)250
30	**DSE18XA4**	1760	162	49	D	0,83	7,4	3,4	2,6	3,1	0,19500	ZS(X)500

P	Rated torque at 60 Hz mains frequency
n	Typical rated rotor shaft speed at 60 Hz Mains frequency
M_N	Rated torque at rotor shaft
I_N	Rated current at 460 V (for other special voltages, multiply by the inverse voltage ratio to convert the current at 460 V to the current at the desired voltage)
cos φ	Power factor
I_A/I_N	Relative starting current
M_A/M_N	Relative starting torque
M_S/M_N	Relative pull-up torque
M_K/M_N	Relative breakdown torque
J_{rot}	Rotor moment of inertia
Brake	Brake configuration (see Section 16)

The standard motor winding configuration is for 460 V / 60 Hz.

4-pole motors for intermittent periodic duty (S3/S6) and 60 Hz mains frequency

P kW	ED	Type	n 1/min	M_N Nm	I_N (460 V) A	Connection	cos φ	I_A/I_N	M_A/M_N	M_S/M_N	M_K/M_N	J_{rot} kgm²
0,15	15%	**D04LA4**	1620	0,87	0,56	Y	0,77	2,2	1,8	1,7	1,8	0,000175
0,3	15%	**D05LA4**	1620	1,75	0,9	Y	0,75	2,8	2,1	2,0	2,1	0,000295
0,3	60%	**D06LA4**	1620	1,75	0,9	Y	0,75	2,8	2,1	2,0	2,1	0,000295
0,55	60%	**D07LA4**	1620	3,2	1,78	Y	0,86	3,7	1,8	1,6	1,8	0,000385
0,75	60%	**D08MA4**	1680	4,2	1,84	Y	0,81	3,7	1,8	1,5	1,9	0,00115
1,1	60%	**D08LA4**	1680	6,2	2,5	Y	0,82	3,6	1,6	1,5	1,9	0,0015
1,5	60%	**D09SA4**	1680	8,5	3,3	Y	0,84	4,3	1,9	1,6	2,2	0,00245
2,2	60%	**D09LA4**	1680	12,5	4,5	Y	0,86	4,3	1,8	1,6	2,1	0,0032
3,0	60%	**D09XA4**	1680	16,6	6,2	Y	0,86	3,7	1,9	1,8	2,1	0,0038
4,0	60%	**D11SA4**	1710	22	8,1	Δ	0,85	4,4	1,8	1,5	2,2	0,0081
5,5	60%	**D11MA4**	1710	30,5	10,7	Δ	0,87	4,7	1,6	1,6	2,2	0,0105
7,5	60%	**D11LA4**	1710	41,5	14,6	Δ	0,87	5,0	2,0	1,9	2,3	0,014
9,5	60%	**D13MA4**	1710	53	17,3	Δ	0,87	5,4	2,1	1,8	2,4	0,029
11	60%	**D13LA4**	1710	60	20	Δ	0,84	6,0	2,6	2,3	2,7	0,0335
13,5	60%	**D16MA4**	1760	73	25,5	Δ	0,84	6,1	2,3	1,8	2,2	0,057
18,5	60%	**D16LA4**	1760	100	35	Δ	0,84	5,6	2,1	1,8	2,3	0,076
22	60%	**D16XA4**	1760	120	42	Δ	0,84	5,9	2,3	1,4	2,2	0,087
30	60%	**D18LA4**	1760	163	53	Δ	0,89	4,9	2,0	1,6	1,9	0,16
37	60%	**D18XA4**	1760	200	68	Δ	0,85	6,0	2,7	2,2	2,5	0,195

P — Rated output at 60 Hz mains frequency, S3/S6 duty
DC — Permissible duty cycle
n — Typical rated rotor shaft speed at 60 Hz Mains frequency
M_N — Rated shaft torque
I_N — Rated current at 460 V (for other special voltages, multiply by the inverse voltage ratio to convert the current at 460 V to the current at the desired voltage)

cos φ — Power factor
I_A/I_N — Relative starting current
M_A/M_N — Relative starting torque
M_S/M_N — Relative pull-up torque
M_K/M_N — Relative breakdown torque
J_{rot} — Rotor moment of inertia

The standard motor winding configuration is for 460 V / 60 Hz.

See Bauer Publication SD4xx for additional information.

Motors

Technical data of the 60 Hz motors

4/2-pole motors Δ/YY for continuous operation S1, line frequency 60 Hz

P kW	**Type**	n 1/min	M_N Nm	I_N (460 V) A	cos φ	I_A/I_N	M_A/M_N	M_S/M_N	M_K/M_N	J_{rot} kgm²
0,03 / 0,06	**D04LA42**	1620 / 3240	0,160 / 0,170	0,200 / 0,230	0,56 / 0,67	2,4 / 3,4	3,8 / 3,4	3,8 / 3,4	4,0 / 3,7	0,000175
0,04 / 0,08	**D04LA42**	1620 / 3240	0,230 / 0,230	0,230 / 0,260	0,60 / 0,75	2,2 / 3,1	3,3 / 2,3	3,3 / 2,3	3,7 / 2,4	0,000175
0,06 / 0,12	**D05LA42**	1620 / 3240	0,350 / 0,350	0,420 / 0,420	0,50 / 0,75	3,1 / 3,6	3,4 / 2,2	3,3 / 2,1	4,2 / 2,9	0,000295
0,08 / 0,16	**D05LA42**	1620 / 3240	0,470 / 0,470	0,460 / 0,460	0,55 / 0,75	3,1 / 3,6	3,1 / 2,0	3,0 / 1,9	3,8 / 2,5	0,000295
0,06 / 0,12	**D06LA42**	1620 / 3240	0,350 / 0,350	0,420 / 0,420	0,50 / 0,75	3,1 / 3,6	3,4 / 2,2	3,3 / 2,1	4,2 / 2,9	0,000295
0,08 / 0,16	**D06LA42**	1620 / 3240	0,470 / 0,470	0,460 / 0,460	0,55 / 0,75	3,1 / 3,6	3,1 / 2,0	3,0 / 1,9	3,8 / 2,5	0,000295
0,11 / 0,22	**D06LA42**	1620 / 3240	0,64 / 0,64	0,63 / 0,63	0,55 / 0,75	3,1 / 3,6	3,1 / 2,0	3,0 / 1,9	3,8 / 2,5	0,000295
0,16 / 0,32	**D06LA42**	1620 / 3240	0,94 / 0,94	0,82 / 0,82	0,57 / 0,80	3,1 / 3,6	2,8 / 1,9	2,7 / 1,8	3,4 / 2,3	0,000295
0,2 / 0,4	**D07LA42**	1680 / 3360	1,12 / 1,14	1,04 / 1,08	0,58 / 0,81	3,2 / 3,9	3,1 / 1,8	3,0 / 1,5	3,3 / 2,2	0,000385
0,28 / 0,56	**D08MA42**	1680 / 3360	1,58 / 1,58	1,10 / 1,60	0,61 / 0,81	3,7 / 3,2	2,5 / 1,7	2,5 / 1,5	3,3 / 2,1	0,00115
0,4 / 0,8	**D08LA42**	1680 / 3360	2,2 / 2,2	1,40 / 1,74	0,62 / 0,90	5,1 / 5,6	3,0 / 2,0	2,6 / 1,9	3,4 / 2,3	0,0015
0,5 / 1,0	**D09SA42**	1680 / 3360	2,8 / 2,8	1,60 / 2,6	0,71 / 0,91	5,5 / 4,6	3,4 / 2,2	3,4 / 2,2	4,2 / 2,6	0,00245
0,7 / 1,4	**D09SA42**	1680 / 3360	3,9 / 3,9	1,93 / 3,1	0,71 / 0,93	5,1 / 4,5	2,8 / 1,8	2,8 / 1,8	3,4 / 2,2	0,00245
1,0 / 2,0	**D09LA42**	1680 / 3360	5,6 / 5,6	2,8 / 4,3	0,72 / 0,94	5,1 / 4,5	2,8 / 1,8	2,8 / 1,8	3,4 / 2,2	0,0032
1,2 / 2,4	**D09XA42**	1680 / 3360	6,8 / 6,7	3,4 / 5,2	0,65 / 0,87	6,8 / 3,3	2,7 / 2,0	2,7 / 2,0	3,4 / 2,5	0,0038
1,4 / 2,8	**D11SA42**	1710 / 3420	7,8 / 7,8	3,3 / 5,7	0,74 / 0,90	7,0 / 4,9	3,3 / 1,9	2,8 / 1,6	4,5 / 3,1	0,0081
2,0 / 4,0	**D11MA42**	1710 / 3420	11,2 / 11,1	5,1 / 8,4	0,70 / 0,90	7,3 / 5,9	3,4 / 2,3	3,0 / 1,8	4,1 / 2,8	0,0105
2,5 / 5,0	**D11LA42**	1710 / 3420	14 / 14	5,0 / 9,1	0,79 / 0,92	6,1 / 5,0	3,1 / 2,0	3,0 / 1,9	4,1 / 2,8	0,014
3,5 / 7,0	**D13MA42**	1710 / 3420	19,1 / 19,1	7,5 / 13,5	0,76 / 0,91	7,4 / 5,7	3,7 / 2,2	3,1 / 2,0	4,2 / 3,0	0,029
4,5 / 9,0	**D13LA42**	1710 / 3420	25 / 25	9,6 / 17,3	0,76 / 0,91	7,4 / 6,0	3,5 / 2,1	2,8 / 1,9	3,8 / 2,7	0,0345
5,5 / 11	**D16MA42**	1760 / 3520	30 / 29,5	12,4 / 22,5	0,73 / 0,91	7,3 / 5,7	3,1 / 1,9	2,4 / 1,3	3,5 / 2,5	0,057
7,0 / 14	**D16LA42**	1760 / 3520	37,5 / 37,5	14,1 / 26	0,78 / 0,92	7,9 / 6,0	3,4 / 2,3	2,7 / 1,5	3,6 / 2,8	0,076
9,0 / 18	**D16XA42**	1760 / 3520	48,5 / 48,5	17,6 / 34	0,79 / 0,92	8,7 / 6,4	3,1 / 2,0	2,4 / 1,3	3,4 / 2,4	0,087
12,5 / 25	**D18LA42**	1760 / 3520	68 / 67	26,5 / 45,5	0,77 / 0,89	9,3 / 7,7	4,3 / 3,1	3,7 / 2,1	4,2 / 3,3	0,16
16 / 32	**D18XA42**	1760 / 3520	86 / 86	35 / 60	0,77 / 0,89	8,5 / 7,1	4,1 / 2,8	3,4 / 2,0	3,9 / 3,1	0,195

P	Rated outputs at 60 Hz line frequency
n	Guideline values for rated speeds at the rotor shaft at 60 Hz line frequency
M_N	Rated torques at the rotor shaft
I_N	Rated currents 460 V Δ/YY (currents can be converted as inverse ratios of voltages from 460 V to the desired special voltage)
cos φ	Power factors
I_A/I_N	Relative starting currents
M_A/M_N	Relative breakaway torques
M_S/M_N	Relative pull-up torques
M_K/M_N	Relative breakdown torques
J_{rot}	Mass moment of inertia of the rotor

8/4-pole motors Δ/YY for continuous operation S1, line frequency 60 Hz

P kW	**Type**	n 1/min	M_N Nm	I_N (460 V) A	cos φ	I_A/I_N	M_A/M_N	M_S/M_N	M_K/M_N	J_{rot} kgm²
0,03 / 0,06	**D05LA84**	810 / 1620	0,340 / 0,350	0,280 / 0,260	0,52 / 0,71	1,8 / 2,8	3,0 / 2,1	1,8 / 1,9	1,8 / 1,9	0,000295
0,03 / 0,06	**D06LA84**	810 / 1620	0,340 / 0,350	0,280 / 0,260	0,52 / 0,71	1,8 / 2,8	3,0 / 2,1	1,8 / 1,9	1,8 / 1,9	0,000295
0,04 / 0,08	**D06LA84**	810 / 1620	0,450 / 0,460	0,440 / 0,370	0,52 / 0,66	1,5 / 2,4	2,9 / 2,3	1,8 / 1,9	1,8 / 1,9	0,000295
0,06 / 0,12	**D07LA84**	810 / 1620	0,70 / 0,70	0,65 / 0,55	0,52 / 0,66	1,9 / 3,1	3,5 / 1,9	3,5 / 1,7	3,6 / 2,3	0,000385
0,06 / 0,12	**D08LA84**	840 / 1680	0,67 / 0,67	0,460 / 0,460	0,61 / 0,83	3,1 / 4,1	3,4 / 2,5	3,4 / 2,5	3,9 / 3,2	0,0025
0,08 / 0,16	**D08LA84**	840 / 1680	0,90 / 0,90	0,57 / 0,57	0,61 / 0,83	3,1 / 4,1	3,3 / 2,4	3,3 / 2,4	3,9 / 3,3	0,0025
0,11 / 0,22	**D08LA84**	840 / 1680	1,24 / 1,25	0,74 / 0,74	0,61 / 0,83	3,1 / 4,1	3,1 / 2,3	3,1 / 2,3	3,7 / 3,1	0,0025
0,14 / 0,28	**D08LA84**	840 / 1680	1,58 / 1,59	0,92 / 0,92	0,61 / 0,83	3,1 / 4,1	3,1 / 2,3	3,1 / 2,3	3,7 / 3,1	0,0025
0,2 / 0,4	**D08LA84**	840 / 1680	2,2 / 2,2	1,05 / 1,20	0,55 / 0,77	3,1 / 4,1	2,5 / 1,9	2,5 / 1,9	3,0 / 2,5	0,0025
0,25 / 0,5	**D09XC84**	840 / 1680	2,8 / 2,8	1,28 / 1,28	0,48 / 0,77	3,2 / 5,5	3,0 / 2,2	3,0 / 2,3	3,4 / 3,0	0,006
0,28 / 0,56	**D09XC84**	840 / 1680	3,1 / 3,1	1,29 / 1,38	0,57 / 0,80	3,2 / 5,4	2,7 / 2,0	2,7 / 2,1	3,1 / 2,7	0,006
0,4 / 0,8	**D09XC84**	840 / 1680	4,5 / 4,5	1,80 / 2,2	0,55 / 0,79	3,1 / 4,6	2,5 / 1,9	2,5 / 2,0	3,0 / 2,5	0,006
0,5 / 1,0	**D09XC84**	840 / 1680	5,6 / 5,6	2,2 / 2,4	0,55 / 0,81	2,9 / 4,4	2,4 / 1,8	2,4 / 1,8	2,8 / 2,4	0,006
0,8 / 1,6	**D11LC84**	850 / 1710	8,9 / 8,9	2,8 / 3,8	0,63 / 0,88	3,8 / 4,7	2,4 / 2,1	2,4 / 1,9	3,1 / 3,0	0,0215
1,1 / 2,2	**D11LC84**	850 / 1710	12,2 / 12,2	3,7 / 4,5	0,58 / 0,85	4,3 / 6,2	2,5 / 2,3	2,5 / 1,9	3,0 / 2,7	0,0215
1,6 / 3,2	**D11LC84**	850 / 1710	17,9 / 17,9	5,5 / 7,0	0,59 / 0,84	4,1 / 5,6	2,4 / 2,0	2,3 / 1,6	2,8 / 2,5	0,0215
2,2 / 4,4	**D13LC84**	850 / 1710	24 / 24	6,6 / 8,7	0,60 / 0,87	4,7 / 5,9	2,3 / 1,9	2,3 / 1,5	3,2 / 3,1	0,046
2,8 / 5,6	**D13LC84**	850 / 1710	31 / 31	8,6 / 11,2	0,60 / 0,86	4,7 / 5,9	2,3 / 1,9	2,3 / 1,5	3,2 / 3,1	0,046
3,5 / 7,0	**D16MA84**	880 / 1760	38 / 38	12,7 / 14,2	0,59 / 0,84	3,6 / 5,4	2,3 / 2,0	2,0 / 1,5	2,3 / 2,4	0,057
5,0 / 10	**D16LA84**	880 / 1760	54 / 54	16,1 / 18,9	0,57 / 0,87	3,9 / 6,1	2,3 / 2,0	2,1 / 1,5	2,3 / 2,4	0,076
7,0 / 14	**D16XA84**	880 / 1760	76 / 75	22,5 / 26,5	0,60 / 0,84	3,6 / 5,7	2,3 / 2,1	2,2 / 1,8	2,3 / 2,6	0,087
8,0 / 16	**D18LA84**	880 / 1760	87 / 86	22 / 30	0,60 / 0,86	4,1 / 6,0	2,4 / 2,4	2,0 / 2,0	2,1 / 2,3	0,16
10 / 20	**D18XA84**	880 / 1760	108 / 108	27,5 / 37,5	0,60 / 0,86	4,1 / 6,0	2,4 / 2,4	2,0 / 2,0	2,1 / 2,3	0,195

P	Rated outputs at 60 Hz line frequency
n	Guideline values for rated speeds at the rotor shaft at 60 Hz line frequency
M_N	ated torques at the rotor shaft
I_N	Rated currents 460 V Δ/YY (currents can be converted as inverse ratios of voltages from 460 V to the desired special voltage)
cos φ	Power factors
I_A/I_N	Relative starting currents
M_A/M_N	Relative breakaway torques
M_S/M_N	Relative pull-up torques
M_K/M_N	Relative breakdown torques
J_{rot}	Mass moment of inertia of the rotor

Motors

Technical data of the 60 Hz motors

8/2-pole motors Y/Y for intermittent periodic duty S3-25/75%, line frequency 60 Hz

P kW	ED	**Type**	n 1/min	M_N Nm	I_N (460 V) A	cos φ	I_A/I_N	M_A/M_N	M_S/M_N	M_K/M_N	J_{rot} kgm²
0,04 / 0,16	25/75%	**D05LA82**	810 / 3240	0,460 / 0,470	0,370 / 0,74	0,63 / 0,75	1,8 / 3,5	2,1 / 2,4	2,1 / 2,3	2,2 / 2,5	0,000295
0,05 / 0,20	25/75%	**D06LA82**	810 / 3240	0,58 / 0,59	0,470 / 0,94	0,63 / 0,75	1,5 / 3,1	1,9 / 2,2	1,9 / 2,1	2,0 / 2,3	0,000295
0,063 / 0,25	25/75%	**D07LA82**	800 / 3420	0,75 / 0,75	0,55 / 1,10	0,69 / 0,62	1,5 / 2,8	1,8 / 1,5	1,8 / 1,5	2,0 / 3,0	0,000385
0,071 / 0,28	25/75%	**D07LA82**	800 / 3420	0,82 / 0,81	0,60 / 1,30	0,69 / 0,68	1,5 / 2,8	1,7 / 1,4	1,7 / 1,4	1,9 / 2,9	0,000385
0,063 / 0,25	25/75%	**D08LA82**	840 / 3360	0,70 / 0,71	0,51 / 0,65	0,55 / 0,87	3,1 / 4,4	2,6 / 2,9	2,6 / 2,8	3,1 / 3,3	0,0015
0,09 / 0,36	25/75%	**D08LA82**	840 / 3360	1,01 / 1,01	0,65 / 0,98	0,60 / 0,92	3,2 / 4,9	2,2 / 2,9	2,2 / 2,8	2,7 / 3,2	0,0015
0,12 / 0,50	25/75%	**D08LA82**	840 / 3360	1,41 / 1,41	0,90 / 1,33	0,60 / 0,92	3,2 / 4,9	2,2 / 2,9	2,2 / 2,8	2,7 / 3,2	0,0015
0,16 / 0,63	25/75%	**D08LA82**	840 / 3360	1,79 / 1,75	1,12 / 1,35	0,63 / 0,90	2,2 / 5,0	2,0 / 2,3	2,0 / 2,2	2,5 / 2,7	0,0015
0,25 / 1,0	25/75%	**D09XA82**	840 / 3360	2,8 / 2,8	1,19 / 2,1	0,62 / 0,90	2,4 / 5,7	2,1 / 2,5	2,1 / 2,5	2,2 / 2,8	0,0038
0,36 / 1,4	25/75%	**D09XA82**	840 / 3360	4,0 / 3,9	1,91 / 3,0	0,57 / 0,87	2,2 / 4,9	2,1 / 2,3	2,1 / 2,3	2,2 / 2,6	0,0038
0,45 / 1,8	25/75%	**D09XA82**	840 / 3360	5,1 / 5,0	2,2 / 3,9	0,65 / 0,89	2,2 / 4,7	1,9 / 2,2	1,9 / 2,2	2,2 / 2,7	0,0038
0,56 / 2,2	25/75%	**D11LA82**	850 / 3420	6,2 / 6,0	2,1 / 4,3	0,60 / 0,94	3,5 / 5,4	2,1 / 3,2	2,1 / 2,6	2,4 / 3,2	0,014
0,71 / 2,8	25/75%	**D11LA82**	850 / 3420	7,9 / 7,8	2,5 / 5,1	0,58 / 0,94	2,7 / 5,1	2,1 / 2,5	2,1 / 2,2	2,3 / 2,6	0,014
0,90 / 3,6	25/75%	**D11LA82**	850 / 3420	10 / 10	3,2 / 7,2	0,58 / 0,94	2,7 / 4,9	2,0 / 2,2	2,0 / 2,0	2,2 / 2,3	0,014
1,10 / 4,5	25/75%	**D13LA82**	850 / 3420	12,2 / 12,5	3,6 / 9,2	0,59 / 0,90	3,1 / 5,9	2,0 / 2,7	2,0 / 2,0	2,5 / 3,0	0,0345
1,25 / 5,0	25/75%	**D13LA82**	850 / 3420	14 / 13,9	4,2 / 10,7	0,59 / 0,88	3,2 / 5,9	1,8 / 2,6	1,8 / 2,0	2,3 / 3,0	0,0345
1,6 / 6,3	25/75%	**D16XA82**	880 / 3520	16,6 / 17	7,0 / 12,3	0,48 / 0,88	3,9 / 7,1	2,6 / 3,3	2,4 / 2,3	3,0 / 3,3	0,087
2,0 / 8,0	25/75%	**D16XA82**	880 / 3520	21 / 21,5	8,9 / 15,5	0,50 / 0,89	3,9 / 6,7	2,6 / 3,3	2,3 / 2,2	3,0 / 3,3	0,087
2,8 / 11	25/75%	**D16XA82**	880 / 3520	30,5 / 29,5	10,7 / 22,5	0,53 / 0,91	3,3 / 6,5	2,0 / 3,2	1,8 / 2,2	2,1 / 3,1	0,087
3,6 / 14	25/75%	**D18XA82**	880 / 3520	39 / 38	12,7 / 28,5	0,55 / 0,91	3,6 / 5,4	1,9 / 2,5	1,8 / 1,7	2,3 / 2,7	0,195
4,0 / 16	25/75%	**D18XA82**	880 / 3520	43 / 43	14,1 / 32,5	0,55 / 0,91	3,6 / 5,4	1,9 / 2,5	1,8 / 1,7	2,3 / 2,7	0,195
5,0 / 20	25/75%	**D18XA82**	880 / 3520	54 / 54	17,5 / 40	0,55 / 0,91	3,6 / 5,4	1,9 / 2,5	1,8 / 1,7	2,3 / 2,7	0,195

P	Rated outputs at 60 Hz line frequency, duty type S3-25/75%
n	Guideline values for rated speeds at the rotor shaft at 60 Hz line frequency
M_N	Rated torques at the rotor shaft
I_N	Rated currents 460 V Y/Y (currents can be converted as inverse ratios of voltages from 460 V to the desired special voltage)
cos φ	Power factors
I_A/I_N	Relative starting currents
M_A/M_N	Relative breakaway torques
M_S/M_N	Relative pull-up torques
M_K/M_N	Relative breakdown torques
J_{rot}	Mass moment of inertia of the rotor

12/2-pole motors Y/Y for intermittent periodic duty S3-25/75%, line frequency 60 Hz

P kW	ED	**Type**	n 1/min	M_N Nm	I_N (460 V) A	cos φ	I_A/I_N	M_A/M_N	M_S/M_N	M_K/M_N	J_{rot} kgm²
0,045 / 0,28	25/75%	**D08LA122**	560 / 3360	0,76 / 0,79	0,51 / 0,79	0,70 / 0,90	1,5 / 4,9	2,1 / 2,7	2,1 / 2,7	2,1 / 3,0	0,0015
0,063 / 0,40	25/75%	**D08LA122**	560 / 3360	1,07 / 1,13	0,61 / 1,02	0,70 / 0,90	1,5 / 4,9	1,9 / 2,4	1,9 / 2,4	1,9 / 2,7	0,0015
0,09 / 0,56	25/75%	**D08LA122**	560 / 3360	1,54 / 1,59	0,95 / 1,35	0,63 / 0,89	1,5 / 4,5	1,9 / 2,3	1,9 / 2,5	2,0 / 2,6	0,0015
0,11 / 0,71	25/75%	**D09XA122**	560 / 3360	1,88 / 2,0	1,00 / 1,50	0,59 / 0,88	1,6 / 6,0	1,9 / 3,0	1,9 / 2,9	2,0 / 3,6	0,0038
0,16 / 1,0	25/75%	**D09XA122**	560 / 3360	2,7 / 2,8	1,56 / 2,2	0,62 / 0,89	1,6 / 6,0	2,0 / 2,9	2,0 / 2,7	2,0 / 3,6	0,0038
0,2 / 1,25	25/75%	**D09XA122**	560 / 3360	3,4 / 3,5	1,85 / 2,8	0,62 / 0,89	1,6 / 5,5	1,9 / 2,6	1,9 / 2,5	1,9 / 3,4	0,0038
0,25 / 1,6	25/75%	**D11LA122**	560 / 3420	4,2 / 4,4	2,1 / 3,1	0,53 / 0,95	1,8 / 5,4	1,9 / 2,8	1,9 / 2,6	2,2 / 3,1	0,014
0,32 / 2,0	25/75%	**D11LA122**	560 / 3420	5,4 / 5,5	2,7 / 3,6	0,53 / 0,94	1,8 / 5,1	1,9 / 2,7	1,9 / 2,4	2,2 / 3,0	0,014
0,45 / 2,8	25/75%	**D11LA122**	560 / 3420	7,6 / 7,8	3,8 / 5,1	0,52 / 0,94	1,8 / 5,1	1,6 / 2,5	1,6 / 2,2	2,0 / 2,6	0,014
0,63 / 4,0	25/75%	**D13LA122**	560 / 3420	10,7 / 11,1	3,8 / 7,9	0,45 / 0,95	1,8 / 6,1	1,8 / 2,6	1,8 / 2,0	2,0 / 3,0	0,0345
0,80 / 5,0	25/75%	**D13LA122**	560 / 3420	13,5 / 14	5,8 / 10,3	0,41 / 0,92	1,9 / 5,8	1,6 / 3,0	1,6 / 2,1	2,2 / 3,2	0,0345
1,0 / 6,3	25/75%	**D16XA122**	590 / 3520	16,3 / 16,6	7,3 / 12,2	0,35 / 0,90	2,4 / 6,9	2,1 / 3,0	2,1 / 1,9	2,6 / 3,1	0,087
1,25 / 8,0	25/75%	**D16XA122**	590 / 3520	20 / 21,5	9,0 / 15,4	0,35 / 0,90	2,4 / 6,9	2,1 / 3,0	2,1 / 1,8	2,6 / 3,1	0,087
1,6 / 10	25/75%	**D16XA122**	590 / 3520	25 / 26,5	9,6 / 19,1	0,40 / 0,92	2,1 / 5,9	1,8 / 2,6	1,8 / 1,5	2,3 / 2,6	0,087
2,4 / 14	25/75%	**D18XA122**	590 / 3520	39 / 37,5	15,1 / 28,5	0,39 / 0,91	2,0 / 4,7	1,8 / 2,8	1,9 / 2,2	2,1 / 2,8	0,195
2,5 / 16	60/60%	**D18XA122**	590 / 3520	40,5 / 43	14,1 / 28,5	0,46 / 0,92	2,0 / 5,9	1,8 / 2,7	1,5 / 1,6	1,8 / 2,8	0,195
2,8 / 18	10/40%	**D18XA122**	590 / 3520	45,5 / 48	17,6 / 36	0,39 / 0,91	2,0 / 4,7	1,8 / 2,8	1,9 / 2,2	2,1 / 2,8	0,195

P	Rated outputs at 60 Hz line frequency, duty type S3-25/75%
n	Guideline values for rated speeds at the rotor shaft at 60 Hz line frequency
M_N	Rated torques at the rotor shaft
I_N	Rated currents 460 V Y/Y (currents can be converted as inverse ratios of voltages from 460 V to the desired special voltage)
cos φ	Power factors
I_A/I_N	Relative starting currents
M_A/M_N	Relative breakaway torques
M_S/M_N	Relative pull-up torques
M_K/M_N	Relative breakdown torques
J_{rot}	Mass moment of inertia of the rotor

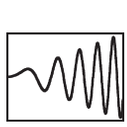

The figures given in the table below are for Bauer motors operating in conjunction with the frequency inverter. The torques referred to in tables can be entered for the respective frequencies in continuous operation (S1 = duty factor 100%).

Motor torques for frequency-converter range 5 Hz - 70 Hz, line frequency 50 Hz

P	**Type**	Connec-tion	5 Hz	10 Hz	20 Hz	30 Hz	50 Hz	60 Hz	70 Hz	5 Hz	10 Hz	20 Hz	30 Hz	50 Hz	60 Hz	70 Hz
			M	M	M	M	M	M	M	I	I	I	I	I	I	I
kW			Nm	Nm	Nm	Nm	Nm	Nm	Nm	A	A	A	A	A	A	A
0,03	**D04LA4**	Y	0,125	0,155	0,185	0,205	0,210	0,210	0,180	0,190	0,193	0,198	0,200	0,200	0,230	0,230
0,04	**D04LA4**	Y	0,165	0,210	0,250	0,275	0,280	0,275	0,205	0,190	0,193	0,198	0,200	0,200	0,230	0,200
0,06	**D04LA4**	Y	0,250	0,315	0,375	0,410	0,420	0,420	0,320	0,290	0,295	0,300	0,300	0,300	0,340	0,305
0,09	**D04LA4**	Y	0,375	0,470	0,56	0,62	0,63	0,63	0,52	0,435	0,440	0,450	0,450	0,450	0,51	0,495
0,12	**D04LA4**	Y	0,50	0,63	0,75	0,82	0,84	0,69	0,50	0,440	0,450	0,455	0,460	0,460	0,460	0,450
0,06	**D05LA4**	Y	0,250	0,315	0,375	0,410	0,420	0,420	0,360	0,300	0,315	0,340	0,350	0,350	0,395	0,400
0,09	**D05LA4**	Y	0,375	0,470	0,56	0,62	0,63	0,63	0,54	0,355	0,365	0,375	0,380	0,380	0,430	0,430
0,12	**D05LA4**	Y	0,51	0,63	0,76	0,83	0,85	0,81	0,59	0,370	0,385	0,410	0,420	0,420	0,455	0,410
0,18	**D05LA4**	Y	0,76	0,96	1,15	1,26	1,28	1,28	0,97	0,59	0,60	0,62	0,63	0,63	0,72	0,64
0,25	**D05LA4**	Y	1,05	1,31	1,57	1,72	1,75	1,74	1,28	0,85	0,86	0,87	0,88	0,88	1,00	0,88
0,06	**D06LA4**	Y	0,250	0,315	0,375	0,410	0,420	0,420	0,360	0,300	0,315	0,340	0,350	0,350	0,395	0,400
0,09	**D06LA4**	Y	0,375	0,470	0,56	0,62	0,63	0,63	0,54	0,355	0,365	0,375	0,380	0,38	0,430	0,430
0,12	**D06LA4**	Y	0,51	0,63	0,76	0,83	0,85	0,81	0,59	0,37	0,385	0,41	0,420	0,42	0,455	0,41
0,18	**D06LA4**	Y	0,76	0,96	1,15	1,26	1,28	1,28	0,97	0,59	0,60	0,62	0,63	0,63	0,72	0,64
0,25	**D06LA4**	Y	1,05	1,32	1,58	1,73	1,76	1,75	1,29	0,85	0,87	0,88	0,89	0,89	1,01	0,89
0,3	**D07LA4**	Y	1,27	1,59	1,9	2,0	2,1	2,1	1,81	1,25	1,27	1,29	1,30	1,30	1,47	1,47
0,37	**D07LA4**	Y	1,57	1,96	2,3	2,5	2,6	2,5	1,83	1,30	1,32	1,34	1,35	1,35	1,46	1,34
0,37	**DHE08MA4**	Y	1,47	1,83	2,2	2,4	2,4	2,4	2,1	1,18	1,19	1,2	1,2	1,2	1,36	1,36
0,55	**DHE08LA4**	Y	2,2	2,8	3,3	3,6	3,7	3,7	2,8	1,13	1,21	1,3	1,36	1,36	1,54	1,38
0,75	**DHE08XA4**	Y	3	3,8	4,5	4,9	5	5	4,2	1,68	1,75	1,83	1,88	1,88	2,2	2,2
0,75	**DHE09SA4**	Y	3	3,8	4,5	4,9	5	5	4,2	1,59	1,66	1,75	1,8	1,8	2,1	2,1
1,1	**DHE09LA4**	Y	4,3	5,4	6,5	7,2	7,3	7,3	6,2	2,2	2,4	2,5	2,6	2,6	2,9	2,9
1,5	**DHE09XA4**	Y	5,9	7,4	8,9	9,8	9,9	9,9	8,5	2,8	3,1	3,2	3,4	3,4	3,8	3,8
2,2	**DHE09XA4C**	Y	8,7	10,8	13	14,3	14,5	14,5	12,4	3,8	4,2	4,5	4,8	4,8	5,4	5,4
2,2	**DHE11SA4**	Y	8,7	10,8	13	14,3	14,5	14,5	12,4	3,6	3,9	4,4	4,6	4,6	5,2	5,3
3	**DHE11MA4**	Y	12	15	18	19,7	20	20	17,1	4,9	5,4	5,9	6,3	6,3	7,2	7,2
4	**DHE11LA4**	Y	15,9	19,8	23,5	26	26,5	26,5	22,5	6,5	7,2	7,9	8,4	8,4	9,5	9,5
5,5	**DHE11LA4C**	Y	21,5	27	32	35,5	36	36	30,5	8,1	9	10	10,7	10,7	12,1	12,1
5,5	**DHE13MA4**	Y	21,5	27	32	35,5	36	36	30,5	8,2	9,2	10,3	11	11	12,5	12,5
7,5	**DHE13LA4**	Y	29	36,5	44	48	49	49	42	11,2	12,6	14,1	15	15,1	17,1	17,1
9,5	**DHE16MA4**	Y	37	46,5	55	61	62	62	53	14,8	16,5	18,4	19,6	19,7	22,5	22,5
11	**DHE16LA4**	Y	42,5	53	64	70	71	71	61	17,2	19	21,5	22,5	22,5	25,5	25,5
15	**DHE16XA4**	Y	58	73	87	96	97	97	83	24	26,5	29,5	31	31	35	35,5
18,5	**DHE18LA4**	Y	72	90	108	118	120	120	102	25	28,5	32,5	35	35	39,5	40
22	**DHE18XA4**	Y	85	106	127	140	142	142	121	33,5	37	41	43,5	43,5	49,5	49,5
30	**DHENF20LG4**	Y	116	145	174	191	194	194	166	37	43	49,5	54	54	61	62
37	**DHENF22SG4**	Y	142	178	210	235	235	235	200	43	51	59	64	64	73	73
45	**DHENF22MG4**	Y	173	215	260	285	285	275	200	52	61	71	78	78	85	73
55	**DHENF25MG4**	Y	210	265	315	350	355	355	280	62	73	86	93	94	107	99
75	**DHENF25MG4**	Y	290	360	435	475	480	480	410	61	72	85	93	94	107	107

Field weakening for frequencies above 50 Hz, winding for standard voltage **400 V Y / 50 Hz**, Temperature Class F.

P	Rated output
n	Guideline value for rated speed at the rotor shaft
M	permissible load torque (S1-100%) for operation with frequency inverter
M_N	Rated torque at the rotor shaft
I	Load current for operation with frequency inverter

Motors with standard windings can be switched from Y- to Δ- circuit for operation with a converter having a single-phase mains connection. This has no effect on the torques and frequencies as listed in the table above. As regards the choice of converter, however, note that currents are higher than those of the Y-circuit by a factor of 1.73.

The load currents in the table are guideline values for selecting the size of frequency inverter. Load current is lower if the load torque is below the values permitted for 30-70 Hz and the frequency inverter used is of the high-grade type. This means that a smaller inverter can sometimes be used, particularly in conjunction with large motors.

Motor torques for frequency-converter range 5 Hz - 100 Hz, line frequency 50 Hz

P	**Type**	Connec-tion	5 Hz	8,7 Hz	10 Hz	20 Hz	87 Hz	100 Hz	5 Hz	8,7 Hz	10 Hz	20 Hz	87 Hz	100 Hz	100 Hz	120 Hz
			M	M	M	M	M	M	I	I	I	I	I	I	I	I
kW			Nm	Nm	Nm	Nm	Nm	Nm	A	A	A	A	A	A	A	A
0,03	**D04LA4**	Δ	0,125	0,150	0,155	0,185	0,210	0,210	0,330	0,335	0,335	0,345	0,350	0,380		
0,04	**D04LA4**	Δ	0,165	0,200	0,210	0,250	0,280	0,280	0,330	0,335	0,335	0,345	0,350	0,380		
0,06	**D04LA4**	Δ	0,25	0,300	0,315	0,375	0,42	0,420	0,51	0,51	0,51	0,52	0,52	0,57		
0,09	**D04LA4**	Δ	0,375	0,45	0,47	0,56	0,63	0,63	0,76	0,76	0,77	0,78	0,78	0,86		
0,12	**D04LA4**	Δ	0,5	0,6	0,63	0,75	0,84	0,75	0,76	0,77	0,78	0,79	0,80	0,80		
0,06	**D05LA4**	Δ	0,25	0,3	0,315	0,375	0,42	0,42	0,52	0,54	0,55	0,59	0,61	0,67		
0,09	**D05LA4**	Δ	0,375	0,45	0,47	0,56	0,63	0,63	0,62	0,63	0,63	0,65	0,66	0,73		
0,12	**D05LA4**	Δ	0,51	0,61	0,63	0,76	0,85	0,85	0,64	0,67	0,67	0,71	0,73	0,80		
0,18	**D05LA4**	Δ	0,76	0,92	0,96	1,15	1,28	1,28	1,01	1,04	1,04	1,07	1,10	1,20		
0,25	**D05LA4**	Δ	1,05	1,25	1,31	1,57	1,75	1,75	1,46	1,48	1,49	1,51	1,53	1,68		
0,06	**D06LA4**	Δ	0,25	0,3	0,315	0,375	0,42	0,42	0,52	0,54	0,55	0,59	0,61	0,67		
0,09	**D06LA4**	Δ	0,375	0,45	0,47	0,56	0,63	0,63	0,62	0,63	0,63	0,65	0,66	0,73		
0,12	**D06LA4**	Δ	0,51	0,61	0,63	0,76	0,85	0,85	0,64	0,67	0,67	0,71	0,73	0,80		
0,18	**D06LA4**	Δ	0,76	0,92	0,96	1,15	1,28	1,28	1,01	1,04	1,04	1,07	1,10	1,20		
0,25	**D06LA4**	Δ	1,05	1,26	1,32	1,58	1,76	1,76	1,47	1,49	1,50	1,53	1,55	1,69		
0,3	**D07LA4**	Δ	1,27	1,52	1,59	1,9	2,1	2,1	2,2	2,2	2,2	2,2	2,3	2,5		
0,37	**D07LA4**	Δ	1,57	1,88	1,96	2,3	2,6	2,6	2,2	2,3	2,3	2,4	2,4	2,6		
0,37	**DHE08MA4**	D	1,47	1,76	1,83	2,2	2,4	2,4	2,1	2,1	2,1	2,1	2,1	2,1	2,3	2,4
0,55	**DHE08LA4**	D	2,2	2,6	2,8	3,3	3,7	3,7	2,9	1,95	2,1	2,1	2,2	2,4	2,6	2,5
0,75	**DHE08XA4**	D	3	3,6	3,8	4,5	5	5	4,3	3	3,1	3,1	3,2	3,3	3,6	3,7
0,75	**DHE09SA4**	D	3	3,6	3,8	4,5	5	5	4,3	2,8	2,8	2,9	3,1	3,2	3,5	3,6
1,1	**DHE09LA4**	D	4,3	5,2	5,4	6,5	7,3	7,3	6,3	3,8	4	4	4,2	4,5	4,9	5
1,5	**DHE09XA4**	D	5,9	7,1	7,4	8,9	9,9	9,9	8,6	5	5,2	5,3	5,6	5,9	6,4	6,6
2,2	**DHE09XA4C**	D	8,7	10,4	10,8	13	14,5	14,5	12,6	6,7	7,1	7,2	7,8	8,3	9,1	9,3
2,2	**DHE11SA4**	D	8,7	10,4	10,8	13	14,5	14,5	12,6	6,2	6,7	6,8	7,5	8	8,8	9,1
3	**DHE11MA4**	D	12	14,3	15	18	20	20	17,4	8,4	9,1	9,3	10,3	11	12	12,4
4	**DHE11LA4**	D	15,9	19	19,8	23,5	26,5	26,5	23	11,3	12,2	12,4	13,7	14,6	16	16,5
5,5	**DHE11LA4C**	D	21,5	25,5	27	32	36	36	31	13,9	15,2	15,5	17,3	18,6	20,5	21
5,5	**DHE13MA4**	D	21,5	25,5	27	32	36	36	31	14,1	15,5	15,8	17,7	19,1	21	22
7,5	**DHE13LA4**	D	29	35	36,5	44	49	49	42,5	19,3	21,5	22	24,5	26,5	29	30
9,5	**DHE16MA4**	D	37	44,5	46,5	55	62	62	53	26	28	29	32	34,5	37,5	39
11	**DHE16LA4**	D	42,5	51	53	64	71	71	62	30	32,5	33	36,5	39	43	44,5
15	**DHE16XA4**	D	58	70	73	87	97	97	84	41,5	45	46	51	54	59	61
18,5	**DHE18LA4**	D	72	86	90	108	120	120	104	43,5	48	49,5	56	61	67	69
22	**DHE18XA4**	D	85	102	106	127	142	142	123	58	63	64	71	76	83	86
30	**DHENF20LG4**	D	116	139	145	174	194	194	168	64	72	74	86	94	103	106
37	**DHENF22SG4**	D	142	171	178	210	235	235	205	75	85	87	101	111	122	126
45	**DHENF22MG4**	D	173	205	215	260	285	285	205	90	102	106	123	136	149	128
55	**DHENF25MG4**	D	210	255	265	315	355	355	290	107	122	126	148	163	179	174
75	**DHENF25MG4**	D	290	345	360	435	480	480	420	105	121	125	147	163	179	185

Field weakening for frequencies above 87 Hz, winding for
230 V Δ/ 50 Hz (U_{max} = 400 V Δ/87 Hz), Temperature Class F.

P	Rated output
n	Guideline value for rated speed at the rotor shaft
M	permissible load torque (S1-100%) for operation with frequency inverter
M_N	Rated torque at the rotor shaft
I	Load current for operation with frequency inverter

The load currents in the table are guideline values for selecting the size of frequency inverter. Load current is lower if the load torque is below the values permitted for 30-100 Hz and the frequency inverter used is of the high-grade type. This means that a smaller inverter can sometimes be used, particularly in conjunction with large motors.

Motor torques for frequency-converter range 6 Hz - 84 Hz, line frequency 60 Hz

P	**Type**	Connec-tion	6 Hz	12 Hz	24 Hz	36 Hz	60 Hz	72 Hz	84 Hz	6 Hz	12 Hz	24 Hz	36 Hz	60 Hz	72 Hz	84 Hz
			M	M	M	M	M	M	M	I	I	I	I	I	I	I
kW			Nm	Nm	Nm	Nm	Nm	Nm	Nm	A	A	A	A	A	A	A
0,03	**D04LA4**	Y	0,115	0,140	0,165	0,180	0,180	0,180	0,150	0,176	0,178	0,180	0,185	0,180	0,205	0,205
0,04	**D04LA4**	Y	0,145	0,180	0,215	0,235	0,230	0,230	0,180	0,176	0,178	0,180	0,185	0,180	0,205	0,190
0,06	**D04LA4**	Y	0,220	0,275	0,325	0,355	0,350	0,350	0,300	0,275	0,275	0,280	0,290	0,280	0,320	0,320
0,09	**D04LA4**	Y	0,330	0,410	0,485	0,53	0,520	0,520	0,445	0,400	0,400	0,400	0,415	0,400	0,455	0,455
0,12	**D04LA4**	Y	0,445	0,55	0,65	0,71	0,70	0,63	0,465	0,410	0,415	0,420	0,435	0,420	0,435	0,415
0,06	**D05LA4**	Y	0,220	0,275	0,325	0,355	0,350	0,350	0,300	0,280	0,295	0,315	0,330	0,320	0,365	0,365
0,09	**D05LA4**	Y	0,330	0,410	0,485	0,53	0,520	0,520	0,445	0,335	0,340	0,350	0,360	0,350	0,395	0,400
0,12	**D05LA4**	Y	0,445	0,55	0,65	0,71	0,70	0,70	0,53	0,345	0,36	0,375	0,395	0,38	0,43	0,385
0,18	**D05LA4**	Y	0,67	0,83	0,99	1,08	1,06	1,06	0,87	0,54	0,56	0,58	0,60	0,58	0,66	0,64
0,25	**D05LA4**	Y	0,92	1,14	1,36	1,48	1,45	1,45	1,15	0,78	0,79	0,8	0,83	0,8	0,91	0,85
0,06	**D06LA4**	Y	0,22	0,275	0,325	0,355	0,35	0,35	0,3	0,28	0,295	0,315	0,330	0,32	0,365	0,365
0,09	**D06LA4**	Y	0,33	0,41	0,485	0,53	0,52	0,52	0,445	0,335	0,34	0,35	0,360	0,35	0,395	0,4
0,12	**D06LA4**	Y	0,445	0,55	0,65	0,71	0,70	0,70	0,53	0,345	0,36	0,375	0,395	0,38	0,43	0,385
0,18	**D06LA4**	Y	0,67	0,83	0,99	1,08	1,06	1,06	0,87	0,54	0,56	0,58	0,60	0,58	0,66	0,64
0,25	**D06LA4**	Y	0,92	1,14	1,36	1,48	1,45	1,45	1,15	0,78	0,79	0,8	0,83	0,8	0,91	0,85
0,3	**D07LA4**	Y	1,12	1,38	1,65	1,80	1,76	1,76	1,5	1,18	1,19	1,20	1,24	1,2	1,36	1,36
0,37	**D07LA4**	Y	1,37	1,69	2,0	2,2	2,1	2,1	1,64	1,24	1,25	1,26	1,30	1,26	1,43	1,28
0,55	**D08MA4**	Y	1,98	2,4	2,9	3,1	3,1	3,1	2,4	1,29	1,36	1,44	1,51	1,47	1,66	1,55
0,75	**DHE08XA4**	Y	2,4	3,1	3,7	4,1	4,1	4,1	3,7	1,45	1,5	1,56	1,6	1,6	1,78	1,81
0,75	**DHE09SA4**	Y	2,4	3,1	3,7	4,1	4,1	4,1	3,7	1,34	1,43	1,53	1,6	1,6	1,78	1,81
1,10	**DHE09LA4**	Y	3,6	4,5	5,4	5,9	6	6	5,4	1,85	1,99	2,2	2,2	2,2	2,5	2,6
1,50	**DHE09XA4**	Y	4,9	6,1	7,3	8,1	8,2	8,2	7,3	2,4	2,6	2,8	3	3	3,3	3,4
2,2	**DHE09XA4C**	Y	7,2	9	10,8	11,8	12	12	10,8	3,5	3,7	3,9	4	4	4,5	4,5
2,2	**DHE11SA4**	Y	7,2	9	10,8	11,8	12	12	10,8	3,1	3,5	3,8	4	4	4,5	4,5
3,0	**DHE11MA4**	Y	9,9	12,3	14,8	16,2	16,5	16,5	14,8	4,2	4,7	5,2	5,5	5,5	6,1	6,3
4,0	**DHE11LA4**	Y	13	16,2	19,5	21	21,5	21,5	19,5	5,6	6,2	6,9	7,3	7,3	8,1	8,3
5,5	**DHE11LA4C**	Y	18	22,5	27	29,5	30	30	27	7	7,8	8,6	9,2	9,2	10,2	10,4
5,5	**DHE13MA4**	Y	18	22,5	27	29,5	30	30	27	7,3	8,1	9,1	9,7	9,7	10,8	11
7,5	**DHE13LA4**	Y	24	30	36	40	40,5	40,5	36	9,9	11	12,3	13,1	13,2	14,7	15
9,2	**DHE16MA4**	Y	30	37,5	45	49	50	50	45	12,8	14,1	15,5	16,4	16,5	18,3	18,7
11,0	**DHE16LA4**	Y	35	44	53	58	59	59	53	15	16,6	18,4	19,5	19,6	22	22,5
15,0	**DHE16XA4**	Y	48,5	60	72	80	81	81	72	21	23	25,5	27	27	30	31
18,5	**DHE18LA4**	Y	60	75	90	98	100	100	90	22	25,5	29	31	31	34,5	35,5
22	**DHE18XA4**	Y	70	88	106	116	118	118	106	29,5	32,5	36	38,5	38,5	43	43,5

Field weakening for frequencies above 60 Hz, winding for standard voltage **460 V Y / 60 Hz**, Temperature Class F.

P	Rated output
n	Guideline value for rated speed at the rotor shaft
M	permissible load torque (S1-100%) for operation with frequency inverter
M_N	Rated torque at the rotor shaft
I	Load current for operation with frequency inverter

Motors with standard windings can be switched from Y- to Δ- circuit for operation with a converter having a single-phase mains connection. This has no effect on the torques and frequencies as listed in the table above. As regards the choice of converter, however, note that currents are higher than those of the Y-circuit by a factor of 1.73.

The load currents in the table are guideline values for selecting the size of frequency converter. Load current is lower if the load torque is below the values permitted for 36-84 Hz and the frequency inverter used is of the high-grade type. This means that a smaller inverter can sometimes be used, particularly in conjunction with large motors.

Motor torques for frequency-converter range 6 Hz - 120 Hz, line frequency 60 Hz

P	Type	Connec-tion	6 Hz	12 Hz	24 Hz	36 Hz	104 Hz	120 Hz	140 Hz	6 Hz	12 Hz	24 Hz	36 Hz	104 Hz	120 Hz	140 Hz
			M	M	M	M	M	M	M	I	I	I	I	I	I	I
kW			Nm	Nm	Nm	Nm	Nm	Nm	Nm	A	A	A	A	A	A	A
0,03	**D04LA4**	Δ	0,105	0,13	0,155	0,180	0,17	0,17		0,245	0,25	0,26	0,325	0,26	0,29	
0,04	**D04LA4**	Δ	0,145	0,18	0,215	0,235	0,23	0,23		0,28	0,28	0,28	0,325	0,28	0,305	
0,06	**D04LA4**	Δ	0,22	0,275	0,325	0,355	0,35	0,35		0,455	0,465	0,48	0,50	0,485	0,54	
0,09	**D04LA4**	Δ	0,33	0,41	0,485	0,53	0,52	0,52		0,72	0,73	0,74	0,72	0,75	0,82	
0,12	**D04LA4**	Δ	0,445	0,55	0,65	0,71	0,7	0,65		0,63	0,65	0,67	0,75	0,68	0,7	
0,06	**D05LA4**	Δ	0,22	0,275	0,325	0,355	0,35	0,35		0,48	0,51	0,55	0,57	0,56	0,61	
0,09	**D05LA4**	Δ	0,33	0,41	0,485	0,53	0,52	0,52		0,58	0,59	0,61	0,63	0,61	0,67	
0,12	**D05LA4**	Δ	0,445	0,55	0,65	0,71	0,7	0,7		0,6	0,62	0,65	0,68	0,66	0,73	
0,18	**D05LA4**	Δ	0,67	0,83	0,99	1,08	1,06	1,06		0,93	0,96	1,00	1,04	1,01	1,11	
0,25	**D05LA4**	Δ	0,92	1,14	1,36	1,48	1,45	1,45		1,34	1,36	1,38	1,43	1,39	1,53	
0,06	**D06LA4**	Δ	0,22	0,275	0,325	0,355	0,35	0,35		0,48	0,51	0,55	0,57	0,56	0,61	
0,09	**D06LA4**	Δ	0,33	0,41	0,485	0,53	0,52	0,52		0,58	0,59	0,61	0,63	0,61	0,67	
0,12	**D06LA4**	Δ	0,445	0,55	0,65	0,71	0,7	0,7		0,6	0,62	0,65	0,68	0,66	0,73	
0,18	**D06LA4**	Δ	0,67	0,83	0,99	1,08	1,06	1,06		0,93	0,96	1,00	1,04	1,01	1,11	
0,25	**D06LA4**	Δ	0,92	1,14	1,36	1,48	1,45	1,45		1,34	1,36	1,38	1,43	1,39	1,53	
0,3	**D07LA4**	Δ	1,12	1,38	1,65	1,80	1,76	1,76		2,1	2,1	2,1	2,2	2,1	2,3	
0,37	**D07LA4**	Δ	1,37	1,69	2	2,2	2,1	2,1		2,2	2,2	2,2	2,2	2,2	2,4	
0,55	**D08MA4**	Δ	1,98	2,4	2,9	3,1	3,1	3,1		2,2	2,4	2,5	2,7	2,6	2,8	
0,75	**DHE08XA4**	D	2,4	3,1	3,7	4,1	4,1	4,1	3,7	2,6	2,6	2,7	2,8	2,8	3,1	3,2
0,75	**DHE09SA4**	D	2,4	3,1	3,7	4,1	4,1	4,1	3,7	2,4	2,5	2,7	2,8	2,8	3,1	3,2
1,10	**DHE09LA4**	D	3,6	4,5	5,4	5,9	6	6	5,3	3,2	3,5	3,8	3,9	3,9	4,3	4,5
1,50	**DHE09XA4**	D	4,9	6,1	7,3	8,1	8,2	8,2	7,3	4,2	4,5	4,9	5,1	5,2	5,7	5,8
2,2	**DHE09XA4C**	D	7,2	9	10,8	11,8	12	12	10,6	6,1	6,4	6,7	6,9	7	7,7	7,9
2,2	**DHE11SA4**	D	7,2	9	10,8	11,8	12	12	10,6	5,4	5,9	6,5	6,9	7	7,7	7,9
3,0	**DHE11MA4**	D	9,9	12,3	14,8	16,2	16,5	16,5	14,7	7,4	8,1	9	9,5	9,6	10,5	10,8
4,0	**DHE11LA4**	D	13	16,2	19,5	21	21,5	21,5	19,3	9,7	10,8	11,9	12,6	12,7	13,9	14,3
5,5	**DHE11LA4C**	D	18	22,5	27	29,5	30	30	26,5	12,1	13,4	14,9	15,9	16	17,6	18,1
5,5	**DHE13MA4**	D	18	22,5	27	29,5	30	30	26,5	12,6	14,1	15,7	16,7	16,9	18,5	19
7,5	**DHE13LA4**	D	24	30	36	40	40,5	40,5	36	17,1	19,1	21,5	23	23	25,5	26
9,2	**DHE16MA4**	D	30	37,5	45	49	50	50	44,5	22	24,5	27	28,5	29	31,5	32,5
11,0	**DHE16LA4**	D	35	44	53	58	59	59	52	26	29	32	34	34	37,5	38,5
15,0	**DHE16XA4**	D	48,5	60	72	80	81	81	72	36,5	40	44	46,5	47	52	53
18,5	**DHE18LA4**	D	60	75	90	98	100	100	89	38	43,5	49,5	54	54	60	61
22	**DHE18XA4**	D	70	88	106	116	118	118	105	51	56	63	67	67	74	76

Field weakening for frequencies above 87 Hz, winding for standard voltage 265 V Δ / 60 Hz (Umax = 460 V Δ / 104 Hz), Temperature Class F.

P	Rated output
n	Guideline value for rated speed at the rotor shaft
M	permissible load torque (S1-100%) for operation with frequency inverter
M_N	Rated torque at the rotor shaft
I	Load current for operation with frequency inverter

The load currents in the table are guideline values for selecting the size of frequency converter. Load current is lower if the load torque is below the values permitted for 36-120 Hz and the frequency inverter used is of the high-grade type. This means that a smaller inverter can sometimes be used, particularly in conjunction with large motors.

Notes on design

Use the torque required at the lowest operating speed to select motors for applications which require constant torque over the entire speed range, as is the case, for example, with lifting gear and conveyors. Bear in mind, too, the possibility of torque being lower in the field-weakening range.

Use only the torque required at the highest operating speed to select motors for applications which require square-law torque over the speed range, as is the case, for example, with pumps and fans. Field weakening is not permissible.

The motor's power is frequency-dependent. It can be approximated in kW from torque M in Nm, the 50 Hz or 60 Hz speed n and the frequency f in Hz by means of the equation

$P = M \times n / 9550 \times f/50$
or
$P = M \times n / 9550 \times f/60$

If a frequency inverter is used in conjunction with a pulse generator, the full 50 Hz or 60 Hz rated torque is available as holding torque at motor standstill (independent fan required for prolonged periods at standstill). In many instances, however, a mechanical brake is necessary for holding a position exactly or for safety reasons.

The use of thermistors for the thermal protection of the motor winding for frequency inverter duty are strictly recommended (available at extra cost for all motor sizes).

Increased torque with reduced duty factor

A reduction in duty factor increases the torque available at the low end of the frequency range (up to the transition frequency for field weakening) in accordance with the factors in the table below:

Duty factor	Motor torque with reduced duty factor	Increase in current requiremen-tapproximate
100 %	-	-
60 %	1,15 x S1 torque	1,15 x S1 current
40 %	1,30 x S1 torque	1,30 x S1 current
25 %	1,45 x S1 torque	1,45 x S1 current
15 %	1,60 x S1 torque	1,60 x S1 current

This, in turn, means that short-term overload by a factor of 1.6 is permissible for starting from a low speed, for example. An increase in torque in the field-weakening range due to a reduction in duty factor is possible only under certain conditions; the 1.6x S1 torque generally cannot be achieved

Increased torque with external fan

If an independent fan is used, the S1- torque in the lower frequency range (below 30 Hz) need not be reduced, i.e., when it has an independent fan the motor can provide the 50 Hz or 60 Hz rated torque throughout the entire frequency range to the cut-off frequency of the field weakening.

With a high quality frequency inverter of 160%, when independent ventilation is combined with a reduced duty factor the 50 Hz or 60 Hz torque is available from rest through to the transition frequency of the field weakening range.

External ventilation is available for motor types D08 and larger (see chapter 16 "Motor-independent fan (FV)). In many instances, a more economical alternative is to select a larger motor without external ventilation.

Energy-saving function

High quality frequency inverters reduce voltage in part-load operation to lower the motor current and thus improve efficiency. This converter function emulates the method of operation of commercially available "energy-saving devices".

Regeneration

Regenerative torques (braking torques) are required for motors used in lifting gear, for example. In conjunction with high quality frequency inverters, the motor torques listed in the table can also be applied as regenerative torques. As with motor torque, an increase in regenerative torque with reduced duty factor is permissible.

Notes on operation with other-make frequency inverters

The precondition is that the motor current generated by the frequency converter is largely free of harmonics. The harmonics generated in the motor by some old-style frequency inverters result in additional losses and cut available torque by some 10% across the entire frequency range. There is also a risk of oscillation causing damage to the gear unit.

At frequencies below approximately 5 Hz, operation without pulse generators is possible only using a frequency inverter with state-of- the-art control. If frequency inverters are used that do not feature load-dependent frequency and current adjustment, the increase in the motor's current consumption means that, particularly in the case of small motors (D04-D..09), torque has to be reduced at frequencies below approximately 10 Hz even if an external fan is used or the duty factor is reduced. Regenerative operation is possible only under certain circumstances.

The **gearboxes** described in this catalogue are suitable for use in explosive areas of Zones 1, 2, 21 and 22. An **EC-Declaration of Conformity** can be supplied on request; it is based on a "ignition hazards assessment report" which has been registered with a notified body (PTB). The explosion class of the associated **motors** are designated according to the Zone in which they should be used and according to the Method of use (e.g. use on inverter). The motor parts are partly larger or – for explosion proof – differently designed compared with the standard design shown in this catalogue. The modular system shown in section 3 allows, in most cases, the gear sizes and the connection dimensions to be maintained.

ATEX

The term ATEX is derived from Atmosphères explosibles. The designation 95 and 137 are based on a new numbering of the articles of the first contract of the foundation of the EU. **ATEX 95:** Directive 94/9/EC on the approximation of the laws of the member states concerning equipment and protective systems intended for use in potentially explosive atmospheres; binding for **placing on the market** since 01.07.2003
ATEX 137: Directive 1999/92/EG on minimum requirements for improving the safety and health protection of workers potentially at risk from explosive atmospheres; binding for use in new installations since 01.07.2003 and binding for existing installations to comply with the requirements from 01.07.2006.
For Safety Instructions for the use of explosion protection geared motors, see the operating instructions BA170… .

Scope of supply

Type	Type of motor explosion protection	Zone	Temperature Class T3	Temperature Class T4	max. surface temperature 120°C	max. surface temperature <160°C
DXE	II 2 G Ex e II T3	1	X			
DXD	II 2 G Ex d(e) IIC T4	1	X	X		
DXN	II 3 G Ex nA II T3	2	X			
DXC	II 2 D Ex tD A21 IP65 T<160°C	21				X
DXC	II 2 D Ex tD A21 IP65 T120°C	21			X	
DXS	II 3 D Ex tD T<160°C	22				X
DXE	II 2 G Ex e II T3 / II 2D Ex tD A21 IP65T120°C	1 and 21	X		X	
DXD	II 2 G Ex de IIC T4 / II 2 D T120°C	1 and 21	X	X	X	
DXS	II 3 G Ex nA II T3 / II 3 D Ex tD T<160°C	2 and 22	X			X

Gear units with explosion protection for non-electrical equipment

Since 01.07.2003 mechanical apparatus ("equipment") to be placed on the market has had to comply with the requirements of ATEX 95. In ATEX it is defined: "Equipment means machines, apparatus, fixed or mobile devices, control components and instrumentation thereof and detection or prevention systems which, separately or jointly, are intended for the generation, transfer, storage, measurement, control and conversion of energy for the processing of material and which are capable of causing an explosion through their own potential sources of ignition." The requirement is to be applied on the gear unit of a geared motor; as well as on the driven machine or processing equipment if installed in classified areas with explosion hazard. In order to **declare the conformity** the manufacturer of the driven equipment has to assess and register the **ignition hazard**. This task is simplified if for the geared motor as a component a separate assessment has been performed. Such assessment could be based on the ATEX requirements only. It is positive for the product if the investigation has been based on an existing or draft standard, however.

Should differing conditions come together (e.g. ambient temperature > 40 °C, Speed > 1500 r/min, vertical arrangement of the motor, Temperature Class T4) this could lead to a restriction in the selection of the possible gear units in the higher power range.

For the assessment of Bauer-Gears the following standards, among others, have been taken into account:

EN 1127	Explosive atmospheres, Explosion prevention and protection; Basic concepts and methodology
EN 13463	Non-electrical equipment for use in potentially explosive atmospheres
EN 13463-1	Basic methods and requirements
EN 13463-5	Protection by constructional safety
EN 13463-8	Protection by liquid immersion „k"

Speed change by means of inverter

Zone	Category	Available explosion class with TMS as sole protection	Seperate inverter	Built-on inverter
1	2G	II 2G Ex de IIC T4	Power up to 45 kW	
2	3G	II 3G Ex nA T3	Power up to 30 kW	Power up to 7,5 kW
21	2D	II 2D Ex tD A21 IP65T<160°C	Power up to 30 kW	
22	3D	II 3D Ex tD T <160 °C	Power up to 30 kW	Power up to 7,5 kW
1 and 21	2G/D	II 2 G Ex de IIC T4 / II 2 D T120°C	Power up to 45 kW	-

Motors for explosion protection **„nA" and „e"** must be tested together with the inverter as one unit.

For **explosion protection "e"**, this test must be a Type Examination performed by a named body (EN 60079-14). This combination is not a part of the scope of supply of Bauer.

For **explosion protection "nA"**, the successful test is confirmed by the manufacturer by means of a Certificate of Conformity (EN60079-15).

For motor with **explosion protection "d" and "de" for temperature class T4**, the motor and the inverter do not have to be tested together; the surface temperature which is decisive for the explosion protection is monitored by the monitoring device and thermal protection (EN 60079-14).

For **explosion protection "tD"**, the surface temperature which is decisive for the explosion protection is monitored by the monitoring device and thermal protection; the test for the connection between the motor and the inverter is not necessary (EN 61241-14).

Only motors with temperature monitoring by means of thermistors are permissible for use with frequency inverters.

Technical data for motors in explosion class "increased safety"

II 2G Ex e II T3 2p = 4, 50 Hz

P kW	**Type**	n rpm	M_N Nm	I_N (400 V) A	Connection	cos φ	I_A/I_N	M_A/M_N	M_K/M_N	EU Type examination certificate	T1 s	T2 s	T3 s	T4 s
0,12	**DXE06LA4**	1350	0,85	0,42	Y	0,73	3,4	2,2	2,2	PTB 08 ATEX 3048-BI.01	160	160	160	40
0,18	**DXE06LA4**	1350	1,28	0,63	Y	0,7	3,4	2,3	2,4	PTB 08 ATEX 3048-BI.02	50	50	50	19
0,25	**DXE06LA4**	1350	1,75	0,88	Y	0,69	3,3	2,3	2,3	PTB 08 ATEX 3048-BI.03	30	30	30	0
0,37	**DXE08MA4**	1400	2,5	1,08	Y	0,73	4,7	2,3	2,6	PTB 08 ATEX 3049-BI.09	25	25	25	0
0,55	**DXE08MA4**	1400	3,8	1,6	Y	0,75	4,2	2,1	2,3	PTB 08 ATEX 3049-BI.02	21	21	21	0
0,75	**DXE08LA4**	1400	5,1	2	Y	0,76	4,6	2,2	2,5	PTB 08 ATEX 3049-BI.03	16	16	16	0
1,1	**DXE09SA4**	1400	7,5	2,8	Y	0,78	5,1	2,3	2,7	PTB 08 ATEX 3050-BI.02	17	17	17	0
1,5	**DXE09LA4**	1400	10,2	3,6	Y	0,8	5,4	2,4	2,8	PTB 08 ATEX 3050-BI.03	12	12	12	0
2,2	**DXE11SA4**	1420	14,8	5,1	Y	0,82	6,2	2,2	2,9	PTB 08 ATEX 3051-BI.02	12	12	12	0
3	**DXE11MA4**	1420	20,2	6,5	Δ	0,85	6,3	2,2	2,8	PTB 08 ATEX 3051-BI.03	11	11	11	0
4	**DXE11LA4**	1420	26,5	8,7	Δ	0,81	7,8	2,9	3,6	PTB 08 ATEX 3051-BI.04	9	9	9	0
5,5	**DXE13LA4**	1460	36	11,9	Δ	0,8	8,1	3,2	3,5	PTB 08 ATEX 3052-BI.02	13	13	12	0
7,5	**DXE16MA4**	1460	49	15,2	Δ	0,84	6,9	2,5	2,7	PTB 08 ATEX 3053-BI.01	16	16	15	0
9,5	**DXE16LA4**	1460	64	19,1	Δ	0,84	8	2,7	2,8	PTB 08 ATEX 3053-BI.02	14	14	9	0
11	**DXE16XA4**	1460	71	22	Δ	0,84	8,1	3	3,1	PTB 08 ATEX 3053-BI.04	12	12	10	0

II 2G Ex e II T3 2p = 4, 60 Hz

P kW	**Type**	n rpm	M_N Nm	I_N (440 V) A	Connection	cos φ	I_A/I_N	M_A/M_N	M_K/M_N	EU Type examination certificate	T1 s	T2 s	T3 s	T4 s
0,12	**DXE06LA4**	1660	0,7	0,37	Y	0,73	3,9	2,4	2,4	PTB 08 ATEX 3048-BI.05	160	160	160	40
0,18	**DXE06LA4**	1660	1,06	0,57	Y	0,7	3,8	2,6	2,7	PTB 08 ATEX 3048-BI.04	50	50	50	19
0,25	**DXE06LA4**	1660	1,45	0,8	Y	0,69	3,6	2,5	2,5	PTB 08 ATEX 3048-BI.06	30	30	30	0
0,37	**DXE08MA4**	1680	2	0,98	Y	0,73	5,1	2,5	2,9	PTB 08 ATEX 3049-BI.10	25	25	25	0
0,55	**DXE08MA4**	1680	3,1	1,45	Y	0,75	4,6	2,3	2,5	PTB 08 ATEX 3049-BI.05	21	21	21	0
0,75	**DXE08LA4**	1680	4,2	1,82	Y	0,76	5	2,4	2,7	PTB 08 ATEX 3049-BI.06	16	16	16	0
1,1	**DXE09SA4**	1710	6,2	2,5	Y	0,78	5,6	2,5	3	PTB 08 ATEX 3050-BI.04	17	17	17	0
1,5	**DXE09LA4**	1710	8,5	3,3	Y	0,8	5,9	2,6	3,1	PTB 99 ATEX 3272-BI.05	12	12	12	0
2,2	**DXE11SA4**	1710	12,2	4,6	Y	0,82	6,8	2,4	3,2	PTB 08 ATEX 3051-BI.05	12	12	12	0
3	**DXE11MA4**	1710	16,7	5,9	Δ	0,85	6,9	2,4	3,1	PTB 08 ATEX 3051-BI.06	11	11	11	0
4	**DXE11LA4**	1710	22	7,9	Δ	0,81	8,4	3,2	3,9	PTB 09 ATEX 3051-BI.07	9	9	9	0
5,5	**DXE13LA4**	1760	30	10,7	Δ	0,8	8,6	3,5	3,8	PTB 08 ATEX 3052-BI.03	13	13	12	0
7,5	**DXE16MA4**	1760	40,5	13,8	Δ	0,84	7,6	2,7	3	PTB 08 ATEX 3053-BI.05	16	16	15	0
9,5	**DXE16LA4**	1760	53	17,3	Δ	0,84	8,2	3	3,1	PTB 08 ATEX 3053-BI.06	14	14	9	0
11	**DXE16XA4**	1760	59	19,8	Δ	0,84	8,7	3,3	3,4	PTB 08 ATEX 3053-BI.08	12	12	10	0

Technical Data for motors in ignition protection "flame proof"

Ex d(e) IIC T4 2p=4 50 Hz single speed

P kW	**Type**	n rpm	M_N Nm	I_N (400 V) A	Connec-tion	cos φ	I_A/I_N	M_A/M_N	M_K/M_N	EC Type Test Certificate
0,25	**DNFXD07K0D4**	1350	1,74	0,7	Y	0,8	3,5	2	2,5	09 ATEX 1050X
0,37	**DNFXD07L0D4**	1350	2,6	0,95	Y	0,8	3,6	2,2	2,6	09 ATEX 1050X
0,55	**DNFXD08K0D4**	1400	3,8	1,36	Y	0,8	3,8	2	2,3	09 ATEX 1051X
0,75	**DNFXD08L0D4**	1400	5,1	1,83	Y	0,79	4,2	2,1	2,5	09 ATEX 1051X
1,1	**DNFXD09L1D4**	1400	7,5	2,5	Y	0,84	4,8	2,1	2,5	09 ATEX 1051X
1,5	**DNFXD09L2D4**	1400	10,2	3,2	Y	0,84	5	2,3	2,7	09 ATEX 1051X
2,2	**DNFXD10L1D4**	1400	14,8	5	Y	0,8	5,4	2,4	2,8	09 ATEX 1051X
3	**DNFXD10L2D4**	1400	20,2	6,6	Y	0,82	5,5	2,3	2,7	09 ATEX 1051X
4	**DNFXD11M0D4**	1420	26,6	8,1	Y	0,84	6,8	2,7	3,2	09 ATEX 1051X
5,5	**DNFXD13S0D4**	1420	36,5	10,7	Y	0,86	6,2	2,5	2,7	09 ATEX 1051X
7,5	**DNFXD13M0D4**	1420	50	14,3	Y	0,86	6,5	2,7	2,8	09 ATEX 1051X
11	**DNFXD16M0D4**	1460	72	21	Δ	0,85	6,6	2,5	2,8	09 ATEX 1051X
15	**DNFXD16L0D4**	1460	98	28	Δ	0,86	6,5	2,8	3,1	09 ATEX 1051X
18,5	**DNFXD18M0D4**	1460	121	35	Δ	0,84	6,6	2,9	3	09 ATEX 1052X
22	**DNFXD18L0D4**	1460	144	41	Δ	0,85	6,9	3	3	09 ATEX 1052X
30	**DNFXD20L0D4**	1460	196	53	Δ	0,88	6,8	2,6	2,9	09 ATEX 1053X
37	**DNFXD22S0D4**	1460	241	65	Δ	0,89	6,7	2,7	2,6	09 ATEX 1051X
45	**DNFXD22M0D4**	1460	292	78	Δ	0,89	6,5	2,7	2,6	09 ATEX 1051X

Exd(e) IIC T4 2p = 4 50Hz

P kW	**Type**	n 1/min	M_N Nm	I_N (400V) A		η (100% - load)	η (75% - load)	η (50% - load)	Connec-tion	cos φ	I_A/I_N	M_A/M_N	M_K/M_N	EC Type Test Certificate
0,75	**DNFXD08L0H4**	1445	5	1,71	IE2	81,0%			Y	0,78	6,8	3,2	4,2	09 ATEX 1051X
1,1	**DNFXD09L1H4**	1455	7,2	2,4	IE2	82,7%			Y	0,8	6,8	2,4	3,1	09 ATEX 1051X
1,5	**DNFXD09L2H4**	1450	9,9	3,2	IE2	84,0%			Y	0,81	6,9	2,5	3,2	09 ATEX 1051X
2,2	**DNFXD10L1H4**	1450	14,5	4,4	IE2	85,5%			Y	0,84	7,3	2,9	3,3	09 ATEX 1051X
3	**DNFXD10L2H4**	1450	18,8	6	IE2	86,6%			Y	0,84	7,4	3,1	3,6	09 ATEX 1051X
4	**DNFXD11M0H4**	1460	26,2	7,9	IE2	87,6%			Y	0,83	7,2	3	3,4	09 ATEX 1051X
5,5	**DNFXD13S0H4**	1460	36	10,5	IE2	88,6%			Y	0,85	7,1	3,2	3,5	09 ATEX 1051X
7,5	**DNFXD13M0H4**	1460	49	14,1	IE2	89,5%			Y	0,86	7,4	3,1	3,3	09 ATEX 1051X
11	**DNFXD16M0H4**	1470	71	20,5	IE2	90,6%			Δ	0,85	7,1	2,8	3,1	09 ATEX 1051X
15	**DNFXD16L0H4**	1470	97	28,5	IE2	91,3%			Δ	0,83	7,4	3	3,3	09 ATEX 1051X
18,5	**DNFXD18M0H4**	1470	120	35	IE2	91,9%			Δ	0,83	7,4	3,3	3,4	09 ATEX 1052X
22	**DNFXD18L0H4**	1470	143	41,5	IE2	92,3%			Δ	0,83	7,3	3,3	3,3	09 ATEX 1052X
30	**DNFXD20L0H4**	1470	195	55	IE2	92,9%			Δ	0,85	7,6	3,1	3,3	09 ATEX 1053X
37	**DNFXD22S0H4**	1475	240	67	IE2	93,3%			Δ	0,85	7,1	3	2,9	09 ATEX 1051X
45	**DNFXD22M0H4**	1475	291	81	IE2	93,6%			Δ	0,86	7,2	3,1	3	09 ATEX 1051X

Exd(e) IIC T4 2p = 4 50Hz

P kW	**Type**	n 1/min	M_N Nm	I_N (400V) A		η (100% - load)	η (75% - load)	η (50% - load)	Connec-tion	cos φ	I_A/I_N	M_A/M_N	M_K/M_N	EC Type Test Certificate
0,75	**DNFXD08L0P4**	1445	5	1,68	IE3	82,6%			Y	0,78	6,8	3,2	4,2	09 ATEX 1051X
1,1	**DNFXD09L1P4**	1455	7,2	2,3	IE3	84,2%			Y	0,8	6,8	2,4	3,1	09 ATEX 1051X
1,5	**DNFXD09L2P4**	1450	9,9	3,1	IE3	85,5%			Y	0,81	6,9	2,5	3,2	09 ATEX 1051X
2,2	**DNFXD10L1P4**	1450	14,5	4,3	IE3	87,1%			Y	0,84	7,3	2,9	3,3	09 ATEX 1051X
3	**DNFXD10L2P4**	1450	18,8	5,9	IE3	87,8%			Y	0,84	7,4	3,1	3,6	09 ATEX 1051X
4	**DNFXD11M0P4**	1460	26,2	7,8	IE3	88,7%			Y	0,83	7,2	3	3,4	09 ATEX 1051X
5,5	**DNFXD13S0P4**	1460	36	10,4	IE3	89,6%			Y	0,85	7,1	3,2	3,5	09 ATEX 1051X
7,5	**DNFXD13M0P4**	1460	49	13,9	IE3	90,5%			Y	0,86	7,4	3,1	3,3	09 ATEX 1051X
11	**DNFXD16M0P4**	1470	71	20,5	IE3	91,5%			Δ	0,85	7,1	2,8	3,1	09 ATEX 1051X
15	**DNFXD16L0P4**	1470	97	28,5	IE3	92,1%			Δ	0,83	7,4	3,1	3,4	09 ATEX 1051X
18,5	**DNFXD18M0P4**	1470	120	34,5	IE3	92,7%			Δ	0,83	7,4	3,3	3,4	09 ATEX 1052X
22	**DNFXD18L0P4**	1470	143	41	IE3	93,2%			Δ	0,83	7,4	3,3	3,3	09 ATEX 1052X
30	**DNFXD20L0P4**	1470	195	54	IE3	93,8%			Δ	0,85	7,6	3,1	3,3	09 ATEX 1053X
37	**DNFXD22S0P4**	1475	240	67	IE3	93,9%			Δ	0,85	7,1	3	2,9	09 ATEX 1051X
45	**DNFXD22M0P4**	1475	291	80	IE3	94,3%			Δ	0,86	7,2	3,1	3	09 ATEX 1051X

Ex d(e) IIC T4 2p=4/2 50 Hz pole changing (4/2-pole)

P kW	**Type**	n rpm	M_N Nm	I_N (400 V) A	Connec-tion	cos φ	I_A/I_N	M_A/M_N	M_K/M_N	EC Type Test Certificate
0,50 / 0,65	**DNFXD08K0D42**	1400/2800	3,4 / 2,2	1,43 / 1,66	Δ/YY	0,75/0,89	3,9/4,2	2,0/2,2	2,6/3,0	09 ATEX 1051X
0,70 / 0,85	**DNFXD08L0D42**	1400/2800	4,8 / 2,8	1,92 / 2,1	Δ/YY	0,75/0,87	4,0/4,8	2,1/2,4	2,7/3,2	09 ATEX 1051X
1,10 / 1,40	**DNFXD09L1D42**	1400/2800	7,5 / 4,7	2,7 / 3,1	Δ/YY	0,84/0,92	4,2/4,9	1,8/1,9	2,2/3,0	09 ATEX 1051X
1,50 / 1,90	**DNFXD09L2D42**	1400/2800	10,2 / 6,4	3,5 / 4,1	Δ/YY	0,83/0,92	4,7/5,4	2,0/2,2	2,3/3,0	09 ATEX 1051X
2,6 / 3,2	**DNFXD10L0D42**	1400/2800	17,6 / 10,6	5,9 / 6,5	Δ/YY	0,82/0,91	4,8/5,8	2,0/2,1	2,7/3,0	09 ATEX 1051X
3,7 / 4,4	**DNFXD11M0D42**	1420/2840	24,7 / 14,5	7,6 / 8,9	Δ/YY	0,85/0,91	6,0/6,7	2,2/2,5	3,0/3,3	09 ATEX 1051X
5,0 / 6,0	**DNFXD13S0D42**	1420/2840	33 / 19,6	10,4 / 12	Δ/YY	0,84/0,91	5,0/6,4	2,1/2,5	2,9/2,9	09 ATEX 1051X
7,0 / 9,0	**DNFXD13M0D42**	1420/2840	46 / 29,5	14,2 / 17,3	Δ/YY	0,85/0,92	5,8/6,8	2,6/2,5	2,8/3,0	09 ATEX 1051X
9,5 / 11,0	**DNFXD16M0D42**	1460/2920	62 / 35,5	18,7 / 19,8	Δ/YY	0,84/0,92	6,0/6,8	2,5/2,7	2,8/3,1	09 ATEX 1051X
13,0 / 16,0	**DNFXD16L0D42**	1460/2920	85 / 52	25 / 28,5	Δ/YY	0,84/0,92	6,0/6,8	2,3/2,6	2,8/3,2	09 ATEX 1051X
16,5 / 20	**DNFXD18M0D42**	1460/2920	108 / 65	32 / 36,5	Δ/YY	0,83/0,90	6,5/6,9	2,8/2,8	2,7/3,0	09 ATEX 1052X
19,0 / 25	**DNFXD18L0D42**	1460/2920	124 / 81	36,5 / 45,5	Δ/YY	0,83/0,90	6,5/6,8	3,1/3,1	2,9/3,2	09 ATEX 1052X
26 / 31	**DNFXD20L0D42**	1460/2920	169 / 100	47 / 53	Δ/YY	0,87/0,93	6,6/7,1	2,8/2,7	3,0/3,5	09 ATEX 1053X

Ex d(e) IIC T4 2p=8/4 50 Hz polumschaltbar (8/4-polig)

P kW	**Type**	n rpm	M_N Nm	I_N (400 V) A	Connec-tion	cos φ	I_A/I_N	M_A/M_N	M_K/M_N	EC Type Test Certificate
0,40 / 0,60	**DNFXD09L1D84**	700/1400	5,7 / 4,0	1,48 / 1,40	Δ/YY	0,69/0,88	2,7/4,4	1,5/2,0	2,0/2,5	09 ATEX 1051X
0,55 / 0,80	**DNFXD09L2D84**	700/1400	7,7 / 5,4	2,0 / 1,87	Δ/YY	0,68/0,87	3,3/4,2	1,7/2,0	2,2/2,6	09 ATEX 1051X
0,90 / 1,30	**DNFXD10L1D84**	700/1400	12,5 / 8,9	3,0 / 3,1	Δ/YY	0,71/0,90	3,1/4,2	1,6/2,1	1,6/2,2	09 ATEX 1051X
1,00 / 1,60	**DNFXD10L2D84**	700/1400	13,6 / 10,9	3,1 / 3,5	Δ/YY	0,71/0,91	3,5/4,5	1,7/1,7	2,2/2,4	09 ATEX 1051X
1,50 / 2,5	**DNFXD11M0D84**	710/1420	20,2 / 16,8	4,1 / 5,0	Δ/YY	0,73/0,90	4,4/5,4	1,8/1,9	2,2/2,3	09 ATEX 1051X
2,3 / 3,6	**DNFXD13S0D84**	710/1420	30,7 / 24	6,8 / 7,3	Δ/YY	0,66/0,89	4,2/5,3	1,7/1,8	2,6/2,5	09 ATEX 1051X
3,0 / 5,0	**DNFXD13M0D84**	710/1420	40 / 33	8,1 / 9,5	Δ/YY	0,67/0,90	4,6/5,8	1,9/1,9	2,7/2,6	09 ATEX 1051X
4,7 / 5,5	**DNFXD16M1D84**	730/1460	62 / 36	11,5 / 12,1	Δ/YY	0,73/0,86	4,7/5,7	1,7/2,1	2,5/3,0	09 ATEX 1051X
5,5 / 7,5	**DNFXD16M2D84**	730/1460	73 / 49,5	12,1 / 14,8	Δ/YY	0,79/0,90	4,6/6,1	1,7/2,0	2,2/2,8	09 ATEX 1051X
7,0 / 11,0	**DNFXD16L0D84**	730/1460	93 / 72	16,3 / 22	Δ/YY	0,74/0,89	5,5/6,6	2,0/2,0	2,7/3,0	09 ATEX 1051X
11,0 / 18,0	**DNFXD18L0D84**	730/1460	145 / 117	25 / 32	Δ/YY	0,74/0,92	6,0/6,9	2,2/2,1	2,8/3,2	09 ATEX 1052X
17,0 / 27	**DNFXD20L0D84**	730/1460	222 / 175	39,5 / 47	Δ/YY	0,70/0,91	6,4/7,1	2,2/2,2	3,5/3,8	09 ATEX 1053X
22 / 32	**DNFXD22S0D84**	730/1460	286 / 207	47,5 / 56	Δ/YY	0,75/0,91	6,4/7,2	2,3/2,1	3,3/3,5	09 ATEX 1051X
26 / 38	**DNFXD22M0D84**	730/1460	340 / 246	53 / 65	Δ/YY	0,78/0,93	6,5/7,2	2,4/2,5	3,4/3,6	09 ATEX 1051X

Motors

Explosion protection

EEx d(e) IIC T4 2p=4 VF 5... 70 Hz U_{50Hz} = 400V 99 ATEX 1105

P kW	S	Type	Connec- tion	M_{5Hz} Nm	M_{10Hz} Nm	M_{20Hz} Nm	M_{30Hz} Nm	M_{50Hz} Nm	M_{60Hz} Nm	M_{70Hz} Nm
0,25	S1	**DNFXD07K0D4**	Y	1,04	1,30	1,56	1,71	1,745	1,45	1,20
0,37	S1	**DNFXD07L0D4**	Y	1,53	1,92	2,3	2,5	2,5	2,1	1,8
0,55	S1	**DNFXD08K0D4**	Y	2,2	2,8	3,4	3,8	3,8	3,2	2,8
0,75	S1	**DNFXD08L0D4**	Y	3,0	3,8	4,5	5,0	5,1	4,3	3,7
1,10	S1	**DNFXD09L1D4**	Y	4,5	5,6	6,7	7,4	7,5	6,3	5,4
1,50	S1	**DNFXD09L2D4**	Y	6,1	7,6	9,1	10	10,2	8,5	7,3
2,2	S1	**DNFXD10L1D4**	Y	8,8	11,1	13,3	14,6	14,8	12,3	10,6
3,0	S1	**DNFXD10L2D4**	Y	12,1	15,1	18,1	19,9	20	16,9	14,5
4,0	S1	**DNFXD11M0D4**	Y	15,9	19,9	23,5	26	26,5	22,2	19,0
5,5	S1	**DNFXD13S0D4**	Y	21,5	27	32,5	36	36,5	30,4	26,0
7,5	S1	**DNFXD13M0D4**	Y	30	37,5	45	49	50	41	36
11,0	S1	**DNFXD16M0D4**	Y	43	54	64	71	72	60	51
15,0	S1	**DNFXD16L0D4**	Y	58	73	88	96	98	82	70
18,5	S1	**DNFXD18M0D4**	Y	72	90	108	119	121	101	86
22	S1	**DNFXD18L0D4**	Y	86	108	129	142	144	120	103
30	S1	**DNFXD20L0D4**	Y	117	147	176	193	196	164	140
37	S1	**DNFXD22S0D4**	Y	144	180	201	235	240	201	172
45	S1	**DNFXD22M0D4**	Y	175	215	240	285	290	244	209

Technical data for motors in explosion protection "dust explosion proof"

Motor range DXN
Power selection: See tables"Technical data of the 50 Hz motors" for the base types D04 ... D18

Technical data for motors in explosion protection "non sparking"

Motor range DXC for Zone 21 ; max. surface temperature < 160 °C
Power selection: See tables"Technical data of the 50 Hz motors" for the base types D05 ... D18

Motor range DXS for Zone 22 ; max. surface temperature < 160 °C
Power selection: See tables"Technical data of the 50 Hz motors" for the base types D05 ... D18

Technical data for motors in explosion protection "gas and dust explosion proof"

On request

15

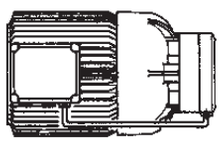

Page

Motor-mounted components **727-752**

Brake
Encoder System
Incremental Encoder
Absolute Encoder
Modular Motor System

Functional description

The compression springs act on the anchor disc, which is free to move in the axial direction and presses the brake disc, which is keyed to the rotor shaft, against the friction plate or the motor bearing plate. This produces the braking torque.

When a DC voltage is applied to the coil in the electromagnet housing, it generates a magnetic force that opposes the spring force and causes the anchor disc to be pulled toward the electromagnet enclosure. This releases the brake disc and disengages the brake.

Brakes are classified into two types according to how they are used: holding brakes and service brakes.

Holding brake ESxx / ZSXxx
A brake that in normal operation does not convert kinetic energy into frictional energy but is only used to hold a mechanism in a particular position, but which can also be used for motion braking in an emergency.

Service brake ESXxx / ZSxx
A brake that converts kinetic energy into frictional energy in normal operation, which means that it brakes mechanical motion.
When a service brake is used as a holding brake, the braking torque tolerance of up to -30% (in new condition) must be taken into account.

Product description of type ES(X) spring-actuated brakes

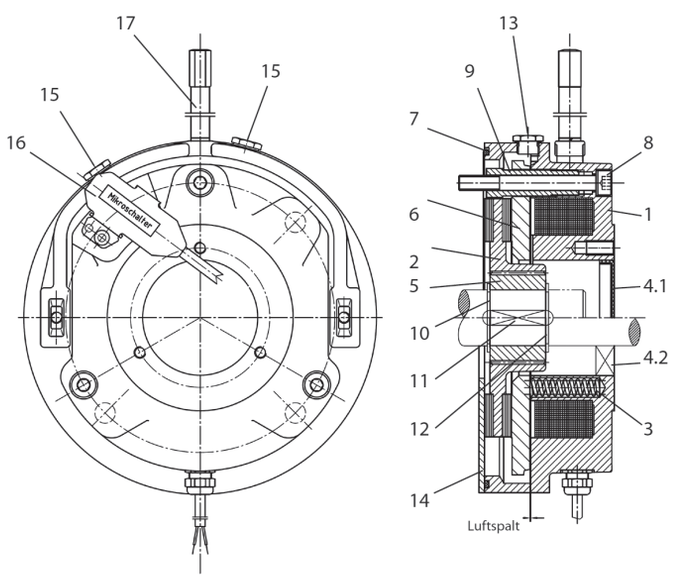

Figure 1: Construction of ES(X) brake

Options

- Manual release, non-locking or locking
- Microswitch for monitoring operation or wear

Construction

1	Electromagnet housing
2	Brake disc
3	Compression spring
4.1	Cover plate with closed brake
4.2	Shaft seal with through shaft
5	Drive bush
6	Anchor disc
7	O-ring
8	Fitting screw with copper washer
9	Hollow screw
10	Retaining ring
11	Key
12	Retaining ring
13	Screw plug for checking air gap
14	Friction plate (only with motor size Dxx08 or Dxx09)
15	Screw plug for checking microswitch setting
16	Microswitch (optional)
17	Manual release (optional)

Product description of type ZS(X) spring-actuated brakes

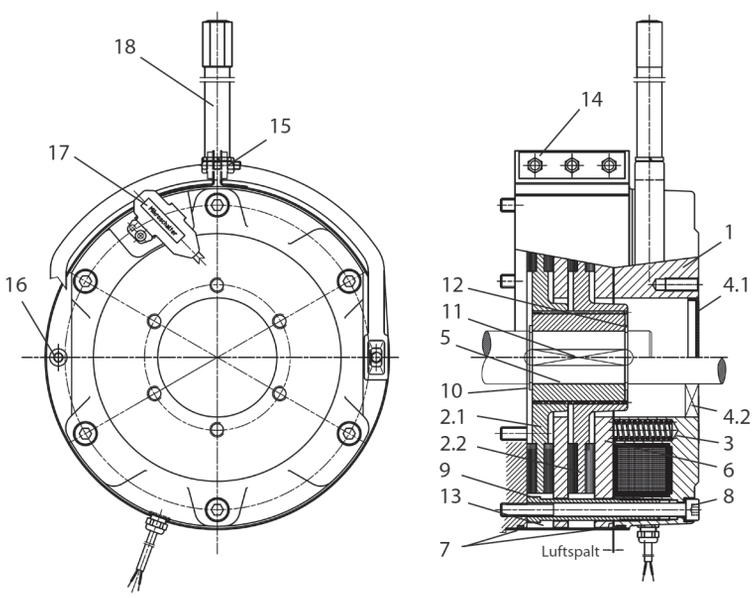

Figure 2: ZS(X) brake construction

16

Options

- Manual release, non-locking or locking
- Microswitch for monitoring operation or wear

Construction

1	Electromagnet housing
2	Brake disc 2.1 and 2.2
3	Compression spring
4.1	Cover plate
4.2	Shaft seal with through shaft
5	Drive bush
6	Anchor disc
7	O-ring
8	Fitting screw with copper washer
9	Hollow screw
10	Retaining ring
11	Key
12	Retaining ring
13	Cover
14	Fitting screws
15	Bracket
16	Assembly screw/assembly aid
17	Microswitch (optional)
18	Manual release (optional)

Brake selection and dimensioning

If the service brake is underdimensioned, it will have increased wear and a shorter lifetime. If it is overdimensioned, the resulting mechanical forces may overload the drive.

If specific application data is not available, in the case of horizontally driven equipment we recommend selecting a braking torque with a safety factor (K) of 1 to 1.5 times the rated torque of the motor.
For braking to standstill, the selected braking torque should be at least 80% of the rated torque of the drive.

Rated torque:

$$M_{Berf} = \frac{P \times 9550}{n_2} \times K$$

M_{Berf}	Braking torque	[Nm]
P	Motor power	[kW]
n	Rated speed at rotor shaft [rpm]	

For lifting operation, a braking torque equal to twice the rated motor torque should always be chosen for safety reasons.

If the moment of inertia, speed and allowable deceleration time of the machine are known, the braking torque can be calculated as described below.

External moments of inertia

If the masses to be decelerated by the brake do not run at the same speed as the rotor shaft, the moment of inertia (J_{ext}) must be reduced to the value at the rotor shaft

$$J_{ext'} = \frac{J_{ext1} \times n_1^2 + J_{ext2} \times n_2^2 + \ldots + J_{extn} \times n_n^2}{i^2}$$

or the external moment of inertia reduced by the gear ratio of the gear unit to the value at the rotor shaft.

$$J_{ext'} = \frac{J_{ext}}{i^2}$$

J_{ext}	Total external moment of inertia [kgm²]
$J_{ext'}$	Total external moment of inertia referenced to the rotor shaft [kgm²]
$J_{ext1,2,...}$	Individual external moments of inertia [kgm²]
i	Gear reduction ratio
n	Rotor shaft speed
$n_{1,2}...$	Speeds of the individual moments of inertia [rpm]

Load torque under static load

$$M_L = F \times r$$

M_L	Load torque [Nm]
F	Force [N]
r	radius [m]

Braking torque with dynamic load

A purely dynamic load is present when flywheels, rolls, etc. must be decelerated and the static load torque is negligible.

$$M_a = \frac{J_{ges} \times n_a}{9{,}55 \times (t_a - t_A)} = \frac{(J_{ext'} + J_{rot} + J_{Br}) \times n_a}{9{,}55 \times (t_a - t_A)}$$

J_{br}	Moment of inertia of the brake [kgm²]
J_{rot}	Moment of inertia of the rotor shaft and rotor [kgm²]
M_a	Deceleration torque [Nm]
n_a	Initial speed at start of deceleration [rpm]
t_a	Total deceleration time (from switch-off until drive is stationary) [s]
t_A	The response time of the brake for braking corresponds to t_{AC} or t_{DC} in the specification tables [s]

Dynamic and static loads

In most application situations, both static and dynamic loads are present.

$M_{Berf} = (M_a \pm M_L) \times K$ where $M_{Berf} \leq M_{br}$ must hold true.

M_L	braking (positive) or driving (negative) load torque [Nm]

Heat generated by each brake cycle

Friction converts the kinetic energy of the moving masses into heat.
This amounts to

$$W = \frac{J_{ges} \times n^2}{182{,}5} = \frac{(J_{ext'} + J_{rot} + J_{Br}) \times n_a^{\,2}}{182{,}5}$$ where $W \leq W_{max}$ must hold true.

W	Braking energy for each brake cycle [J]
M_{max}	Maximum permissible frictional energy per brake cycle (see brake tables)

Thermally allowable braking energy of service brakes

With a uniform sequence of brake cycles, which means a certain average number of brake cycles per hour, the temperature rises until a equilibrium between heat input and heat dissipation is reached. The temperature rise must be dimensioned to avoid overheating the coil and the friction layer, taking the ambient temperature into account.

Braking to standstill:

$$W_Z = W \times Z \leq W_{th}$$

W_{th} Maximum allowable braking energy per hour
W_Z Braking energy with Z brake cycles
Z Number of brake cycles per hour

Lifting operation

In lowering operation, the drive motor acts as a generator and its braking effect results in a steady downward motion (constant speed). If we ignore transmission losses, under full load the drive must brake the load with the rated motor torque. If a mechanical brake with a braking torque equal to the braking torque of the motor is applied after the drive is switched off, the downward motion will continue at the same speed. This means that additional braking torque is necessary to stop the motion of the load. For example, if the brake is dimensioned for 200% braking torque, approximately 100% is used for "static" deceleration and the rest is used for "dynamic" deceleration.
If part of the braking torque is required for braking the load during lowering (downward motion), the brake engagement time is greater, and the thermal load is therefore greater.

In this case

$$W_H = \frac{M_{Br}}{M_{Br} - M_L} \times W_Z$$

W_H Friction energy per hour in lifting operation
M_{Br} Braking torque of the brake

Brake lifetime
The energy absorbed during braking causes the brake disc to wear, which increases the air gap. If the air gap increases beyond a certain maximum gap size, the magnetic field is so weak that the pulling force of the electromagnet is no longer sufficient to release the brake. A proper air gap must be restored by adjusting the air gap or by replacing the brake disc, depending on the type of brake construction.

The maximum number of brake cycles until service is necessary can be calculated as follows:

$$Z_L = \frac{W_L}{W}$$

Z_L Number of brake cycles until the air gap limit is reached
W_L Maximum allowable braking energy until maintenance; i.e. replacing the brake disc or adjusting the air gap. Adjustment of the air gap is possible only with type ZXSxx brakes.

Deceleration time
The pure braking time from the start of mechanical braking to standstill depends on the braking deceleration.
Especially with lifting operation, but also in other types of operation, it is necessary to check whether the load torque reinforces the braking effect or counters the braking effect.

The deceleration time is therefore calculated as follows:

$$t_a = \frac{J_{ges} \times n_a}{9{,}55 \times (M_{Br} \pm M_L)}$$

Electrical connection

General

There are two basic options for providing the supply voltage for the DC electromagnet:
1. Externally from an existing DC control voltage mains or a rectifier in the cabinet.
2. From a rectifier built into the motor or brake terminal box. In this case, the rectifier can be powered either directly from the motor terminal board or from the mains.
Note that in the following cases the rectifier is not allowed to be connected to the terminal board of the motor:

- Pole-changing motors and motors with wide operating voltage range
- Operation from a frequency converter
- Other configurations in which the motor voltage is not constant, such as operation with soft-start devices, start-up transformers, etc.

Release

When the rated voltage is applied to the electromagnet coil, the current through the coils increases exponentially and with it the generated magnetic field. The current must rise to a certain value ($I_{release}$) before it overcomes the spring force and starts to release the brake.

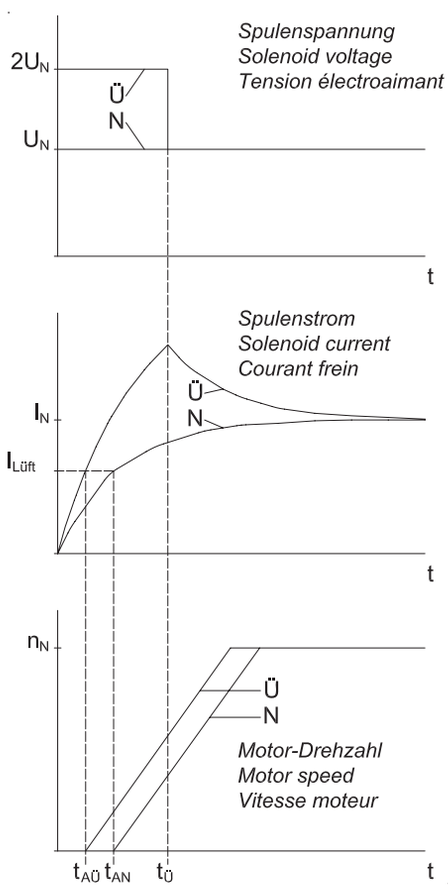

Figure 3: Idealised curves of coil voltage, coil current and motor speed with normal excitation (N) and overexcitation (Ü). $t_Ü$: overexcitation time; t_{AN}, $t_{AÜ}$: Response time with normal excitation and overexcitation.

Two different situations can arise during the response time tA, assuming that the voltage is applied to the motor and the brake simultaneously:

- The motor is locked if $M_A < M_L + M_{Br}$
  The motor draws its locked-rotor current, which increases the thermal load on the motor.
  This situation is illustrated in Figure 3.
- The brake slips if $M_A > M_L + M_{Br}$
  In this case, the brake is also thermally stressed during start-up and wears faster.

M_A: locked rotor torque of the motor; M_L: load torque; M_{Br}: braking torque

As can be seen, there is an additional load on the motor and brake in both cases. The effect of the response time increases with increasing brake size. Consequently, it is advisable to reduce the response time, especially with medium-sized and large brakes and with a high cycle rate. This can be achieved relatively easily by means of electrical overexcitation. With this approach, the coil is briefly operated at twice its rated voltage after switch-on.

This causes the current to rise faster than with normal excitation, and it reduces the response time by approximately 50%. This overexcitation function is built into the type MSG special rectifier.

The release current increases with increasing air gap, and with it the response time. When the release current exceeds the rated coil current, the brake will not be released with normal excitation and the brake has reached its wear limit.

Braking
The brake does not start generating braking torque immediately after the coil voltage is switched off. First the magnetic energy must decline to the point that the spring force can overcome the magnetic force. This occurs at the holding current I_{hold}, which is lower than the release current.
The response time depends on how the voltage is switched off.

Switching off the AC supply voltage to a type SG standard rectifier

a) Rectifier powered from the motor terminal board (Figure 4, curve 1)
Response time t_{A1}: very long

Cause: Due to the residual magnetism of the motor, after the motor voltage is switched off a slowly decaying voltage is induced, and it continues to supply power to the rectifier and thereby to the brake. In addition, the magnetic energy of the brake coil is dissipated relatively slowly in the freewheel circuit of the rectifier.

b) Rectifier powered separately (Figure 4, curve 2)
Response time t_{A2}: long

Cause: After the rectifier voltage is switched off, the magnetic energy of the brake coil is dissipated relatively slowly in the freewheel circuit of the rectifier.

If the supply voltage is interrupted on the AC side, no significant switch-off voltage occurs on the electromagnet coil.

Interrupting the DC circuit of the electromagnet coil (Figure 4, curve 3)

a) By a mechanical switch
- with separate power supply from a DC control voltage mains or
- at the DC switch contacts (A2 and A3) of the type SG standard rectifier
Response time t_{A3}: very short

Cause: The magnetic energy of the brake coil is dissipated very quickly by arcing across the switch contacts.

b) Electronic

Using a type ESG or MSG special rectifier
Response time t_{A3}: short

Cause: The magnetic energy of the brake coil is dissipated quickly by a varistor integrated in the rectifier.

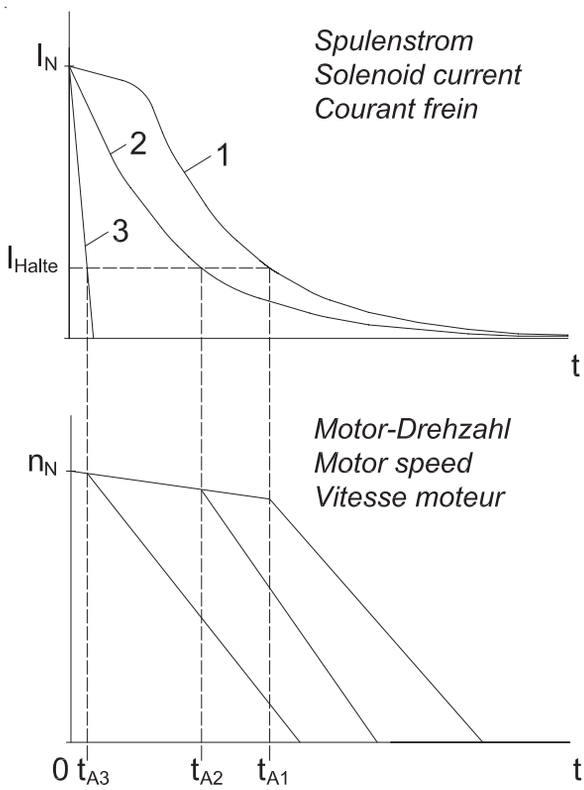

Figure 4: Idealised coil current and motor speed curves after switching off power on the AC side (1 and 2) or DC side (3)

If the circuit is interrupted on the DC side, a high voltage u_q is induce by the electromagnet coil. The magnitude of this voltage depends on the inductance L of the coil and the switch-off speed di/dt according to the formula

$$u_q = L \cdot \frac{di}{dt}$$

Due to the winding design, the inductance L increases with increasing rated coil voltage. Consequently, the voltage spikes induced at switch-off can reach hazardous levels with relatively high coil voltages. For this reason, a varistor is included in the circuit for all brakes with voltages greater than 24 V.
This varistor is solely intended to protect the electromagnet coil; it is not intended to protect adjacent electronic components or devices against electromagnetic interference. On request, brakes with rated voltages of 24 V or less can also be fitted with a varistor.
If the circuit is interrupted on the DC side by a mechanical switch, the resulting arcing over the switch contacts causes strong erosion of the contacts. For this reason, only special DC contactors or adapted AC contactors with contacts rated for use class AC3 as specified in EN 60947-4-1 may be used.

Specifications of holding brakes with emergency stop capability

The maximum allowable friction energy values stated here do not apply to brake motors for use in areas with potentially explosive atmospheres.
Refer to separate data in appropriate documents for explosion-proof drives.

Type	M_{Br}	W_{max}	W_{th}	W_L	t_A	t_{AC}	t_{DC}	P_{el}	J
	[Nm]	[10^3 J]	[10^3 J]	[10^6 J]	[ms]	[ms]	[ms]	[W]	[10-3 kgm^2]
E003B9	3	1,5	-	-	35	150	15	20	0,01
E003B7	2,2	1,8	-	-	28	210	20		
E003B4	1,5	2,1	-	-	21	275	30		
E004B9	5	2,5	-	-	37	125	15	30	0,017
E004B8	4	3	-	-	30	160	18		
E004B6	2,8	3,6	-	-	23	230	26		
E004B4	2	4,1	-	-	18	290	37		
E004B2	1,4	4,8	-	-	15	340	47		
ES010AX	15*	3	-	-	110	-	30	35	0,045
ES010A9	10	3	-	-	60	100	15		
ES010A8	8	3	-	-	55	150	20		
ES010A5	5	3	-	-	45	220	20		
ES010A4	4	3	-	-	30	250	20		
ES010A2	2,5	3	-	-	25	350	25		
ES027AX	32*	2,5	-	-	80	-	30	50	0,172
ES027A9	27	2,5	-	-	120	100	15		
ES027A7	20	2,5	-	-	100	130	20		
ES027A6	16	2,5	-	-	80	170	25		
ES040A9	40	3,5	-	-	100	100	20	65	0,45
ES040A8	34	3,5	-	-	80	200	25		
ES040A7	27	3,5	-	-	70	250	30		
ES070AX	90*	3,5	-	-	120	-	40	85	0,86
ES070A9	70	3,5	-	-	120	150	18		
ES070A8	63	3,5	-	-	120	200	20		
ES070A7	50	3,5	-	-	90	220	25		
ES125A9	125	4,5	-	-	170	220	25	105	1,22
ES125A8	105	4,5	-	-	150	320	28		
ES125A7	85	4,5	-	-	135	350	30		
ES125A6	70	4,5	-	-	120	440	35		
ES125A5	57	4,5	-	-	100	600	40		
ES125A3	42	4,5	-	-	90	700	45		
ES200A9	200	8	-	-	400	150	22	105	2,85
ES200A8	150	8	-	-	280	250	35		
ES200A7	140	8	-	-	200	320	35		
ES250AX	350*	9	-	-	180	-	70	135	6,65
ES250A9	250	9	-	-	300	500	45		
ES250A8	200	9	-	-	200	960	60		
ES250A6	150	9	-	-	160	1100	60		
ES250A5	125	9	-	-	150	1500	90		
ES250A4	105	9	-	-	130	1800	110		
ZS300A9	300	8	-	-	280	220	35	75	5,7
ZS300A8	250	8	-	-	210	380	45		
ZS500A9	500	9	-	-	320	320	50	100	13,3
ZS500A8	400	9	-	-	260	600	60		

* Requires overexcitation; permissible only with MSG rectifier

Braking torque tolerance: -10 / +30%

W_{th} and WL are not specified because little or no braking energy is dissipated by holding brakes when they are used as intended.

For versions with braking torque marked with *, which may only be used with an MSG rectifier, the values of t_A and t_{DC} apply to operation with an MSG rectifier; i.e. t_A for overexcitation or t_{DC} for electronic circuit interruption on the DC side.

Due to the effects of operating temperature and manufacturing tolerances, actual response times may differ from the guideline values listed here.

Specifications of service brakes

The maximum braking energy values stated here do not apply to brake motors for use in areas with potentially explosive atmospheres.
Refer to separate data in appropriate documents for explosion-proof drives.

Type	M_{Br} [Nm]	W_{max} [10^3 J]	W_{th} [10^3 J]	W_L [10^6 J]		t_A [ms]	t_{AC} [ms]	t_{DC} [ms]	P_{el} [W]	J [10^{-3} kgm^2]
				without HL	with HL					
E003B9	3	1,5	36	55	55	35	150	15	20	0,01
E003B7	2,2	1,8	36	90	90	28	210	20		
E003B4	1,5	2,1	36	140	140	21	275	30		
E004B9	5	2,5	60	50	50	37	125	15	30	0,017
E004B8	4	3	60	100	100	30	160	18		
E004B6	2,8	3,6	60	180	180	23	230	26		
E004B4	2	4,1	60	235	235	18	290	37		
E004B2	1,4	4,8	60	310	310	15	340	47		
ESX010AX	15*	3	250	120	120	110	-	30	35	0,045
ESX010A9	10	3	250	120	120	60	100	15		
ESX010A8	8	3	250	150	150	55	150	20		
ESX010A5	5	3	250	240	240	45	220	20		
ESX010A4	4	3	250	300	240	30	250	20		
ESX010A2	2,5	3	250	390	240	25	350	25		
ESX027AX	27*	10	350	150	150	80	-	30	50	0,172
ESX027A9	22	10	350	150	150	120	100	15		
ESX027A7	16	10	350	300	300	100	130	20		
ESX027A6	13	10	350	350	350	80	170	25		
ESX040A9	32	20	450	420	420	100	100	20	65	0,45
ESX040A8	27	20	450	560	490	80	200	25		
ESX040A7	22	20	450	700	490	70	250	30		
ESX070AX	72*	28	550	700	700	120	-	40	85	0,86
ESX070A9	58	28	550	500	500	120	150	18		
ESX070A8	50	28	550	800	700	120	200	20		
ESX070A7	40	28	550	1200	700	90	220	25		
ESX125AX	100*	40	700	1900	1900	100	-	70	105	1,22
ESX125A9	85	40	700	1700	1700	150	320	28		
ESX125A8	70	40	700	1900	1700	135	350	30		
ESX125A7	58	40	700	2700	1700	120	440	35		
ESX125A5	45	40	700	3300	1700	100	600	40		
ESX125A3	34	40	700	3300	1700	90	700	45		
ESX200AX	160*	60	850	2000	2000	105	-	70	105	2,85
ESX200A9	120	60	850	1700	1700	280	250	35		
ESX200A8	110	60	850	2600	2600	200	320	35		
ESX250AX	280*	84	1000	2300	2300	180	-	70	135	6,65
ESX250A9	200	84	1000	2800	2800	300	500	45		
ESX250A8	160	84	1000	6800	5700	200	960	60		
ESX250A6	120	84	1000	8500	5700	160	1100	60		
ESX250A5	100	84	1000	11000	5700	150	1500	90		
ESX250A4	85	84	1000	11000	5700	130	1800	110		
ZSX300A9	250	60	850	1300	1300	280	220	35	75	5,7
ZSX300A8	200	60	850	2000	2000	210	380	45		
ZSX500A9	400	84	1000	2800	2800	320	320	50	100	13,3
ZSX500A8	320	84	1000	4000	4000	260	600	60		

* Requires overexcitation; permissible only with MSG rectifier

Braking torque tolerance:
E003 / E004: -10 / +30%
ESXxx / ZSXxx: -20 / +30% after run-in; up to -30% in new condition.

For versions with braking torque marked with *, which may only be used with an MSG rectifier, the values of t_A and t_{DC} apply for operation with an MSG rectifier; i.e. t_A for overexcitation or t_{DC} for electronic circuit interruption on the DC side.

The values for W_L are guidelines; actual values may vary significantly depending on the application situation. Periodic inspection of the air gap or brake disc thickness is recommended.

Actual response times may differ from the times listed here due to the effects of operating temperature, brake disc wear and manufacturing tolerances.

Key to symbols

M_{Br}	Rated braking torque
W_{max}	Maximum allowable friction energy for an emergency stop with a holding brake
W_{max}	Maximum allowable friction energy for each brake cycle with service brakes
W_{th}	Maximum allowable braking energy per hour
W_L	Maximum allowable braking energy until maintenance; i.e. brake disc replacement or air gap adjustment. Air gap adjustment is possible only with type ZSXxx brakes.
H_L	Manual release
t_A	Response time for release with normal excitation. Overexcitation with a type MSG special rectifier reduces the response time by approximately 50%.
t_{AC}	Response time for brakes with AC-side switch-off, i.e. by switching off the supply voltage to a separately powered standard rectifier. If the supply voltage for the rectifier is taken from the motor terminals, considerably longer response times should be expected (depending on the motor size and winding design).
t_{DC}	Response time for braking with DC-side circuit interruption by a mechanical switch. In the case of electronic circuit interruption on the DC side by a type ESG or MSG special rectifier, the response times will be approximately two to three times as long.
P_{el}	Electromagnet coil power consumption at 20 °C. Depending on the rated voltage of the coil, the actual power may differ from the guideline value stated here.
J	Moment of inertia of the drive bush and brake disc(s)

Connection

The electrical connections to the brake are made in the motor terminal box using terminals or the rectifier. Standard voltages:

380–420 V 50/60 Hz (brake coil voltage 180 V DC)
220–230 V 50/60 Hz (brake coil voltage 105 V DC)
24 V DC (brake coil voltage 24 V DC)

Other voltages are available at additional cost.

DC connection via terminals (K)

The brake must be connected via separate terminals in the motor or brake terminal box directly to the DC voltage. The standard voltages are 180 V DC, 105 V DC and 24 V DC. Brakes with other operating voltages are available at additional cost.

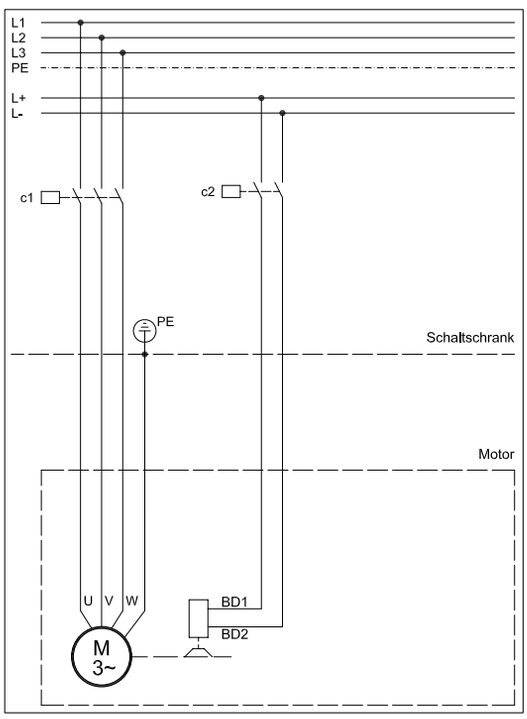

Standard rectifier (S)

Working principle	Half-wave rectifier with switch contacts for DC-side circuit interruption
Input voltage U1	max. 575 VAC +5%
Output voltage	0.45 x U1 VDC
Max. output current	2.5 A DC
Ambient temperature	-40 to +40 °C
Connection	Caged Clamp terminals with clamp lever
Clampable conductor cross-section	max. 1.5 mm² without wire end sleeve max. 1.5 mm² with wire end sleeve
Approvals	c-CSA-us c-UL-us (only in combination with B2000 geared motors and brakes in the ES(X) or ZS(X) product series

The brake must be connected to the AC supply via the standard rectifier in the motor terminal box or brake terminal box. The standard voltages are 380 ... 420 V 50/60 Hz or 220 ... 230 V 50/60 Hz. Other voltages up to 575 V are available at extra cost. In a configuration with standard rectifier, the brake circuit can be interrupted by an extra contact on the d.c. side in order to reduce the response time. This significantly reduces the braking time and overtravel distance.

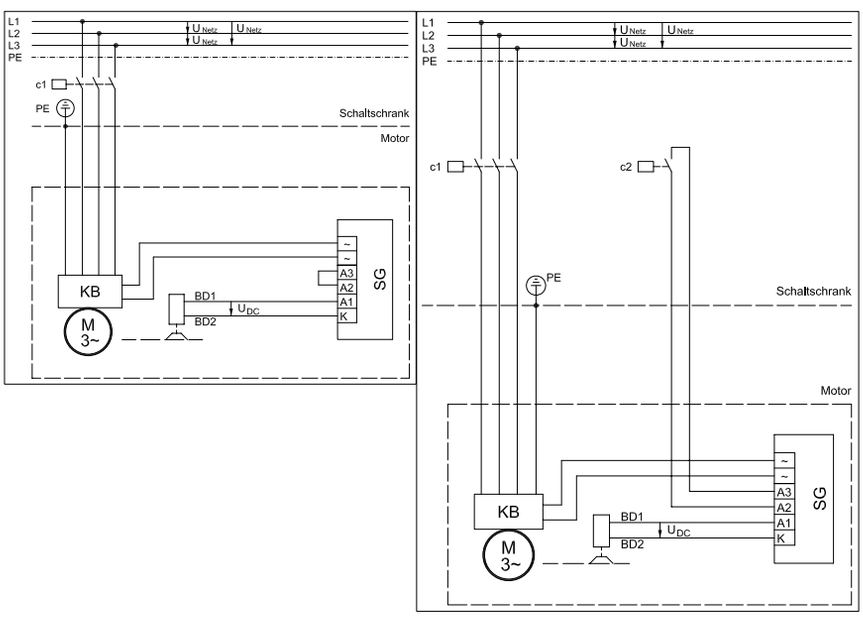

Voltage connection for the rectifier from the motor terminal block or cage clamp (see Rectifier Connection on Motor Terminal Block or Cage Clamp)

Rectifier for electronic rapid shutdown (E)

Working principle	Half-wave rectifier with electronic DC-side circuit interruption
Input voltage U1	220–460 V AC ±5%, 50/60 Hz
Output voltage	0.45 x U1 V DC
Max. output current	1 A DC
Ambient temperature	-20 °C to +40 °C
Clampable conductor cross-section	max. 1.5 mm^2

This rectifier permits electronic DC-side interruption of the brake circuit. No additional cable to the rectifier is necessary. The rectifier is supplied complete with a protective resistor which prevents a mains short- circuit via the shutdown arc of the high-speed motor contactor. Brake response times are significantly shorter than those achievable by AC-side interruption of the brake circuit. They are, however, longer than those achievable with DC-side interruption by a mechanical switch. The brake must be connected to the alternating current via the rapid shutdown rectifier in the motor terminal box or the brake terminal box. The standard voltages are 380 ... 420 V 50/60 Hz or 220 ... 230 V 50/60 Hz. Other voltages up to 460 V are available at extra cost.

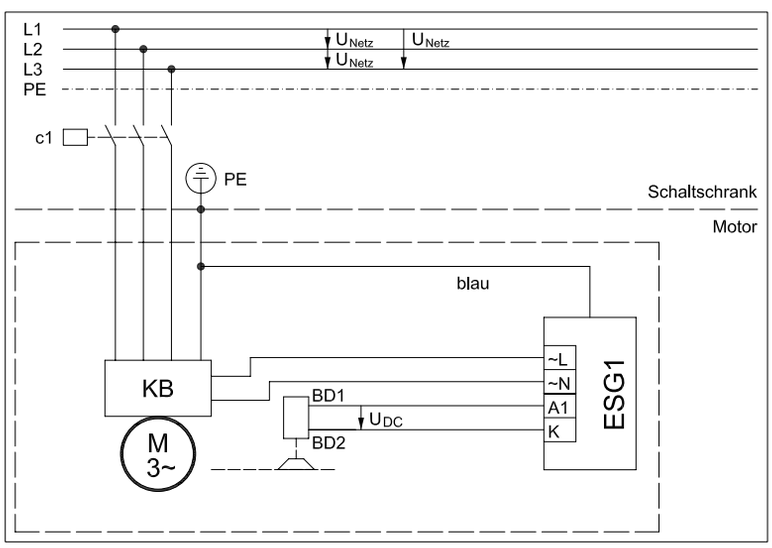

Voltage connection for the rectifier from the motor terminal block or cage clamp (see Rectifier Connection on Motor Terminal Block or Cage Clamp)

Standard rectifier (S)

Working principle	MSG 1.5.480I Half-wave rectifier with time-limed overexcitation and electronic DC-side circuit interruption Fast shutdown due to no motor current in one phase
Input voltage U1	220–480 V AC +6 / -10%, 50/60 Hz
Output voltage	0.9 x U1 V DC during overexcitation 0.45 x U1 V DC over overexcitation period
Overexcitation time	0.3 s
Max. output current	1.5 A DC
Ambient temperature	-20 °C to +40 °C
Clampable conductor cross-section	max. 1.5 mm²

Working principle	MSG 1.5.500U Half-wave rectifier with time-limed overexcitation and electronic DC-side circuit interruption Fast shutdown due to the absence of input voltage
Input voltage U1	220–500 V AC ±10%, 50/60 Hz
Output voltage	0.9 x U1 V DC during overexcitation 0.45 x U1 V DC over overexcitation period
Overexcitation time	0.3 s
Max. output current	1.5 A DC
Ambient temperature	-20 °C to +40 °C
Clampable conductor cross-section	max. 1.5 mm²

In cases where there are high motor switching frequencies, the brake can be de-energised more rapidly with this rectifier thereby significantly reducing the thermal stress on the motor. In addition, interrupting the brake's DC circuit by electronic means significantly reduces response times. Depending on the circumstances in which they are to be used, either the MSG 1.5.500 U (rapid shutdown brought about by removed supply voltage) or MSG 1.5.480 I (rapid shutdown brought about by removed motor current in a phase) is used. Power supply 220 to 480 V AC.

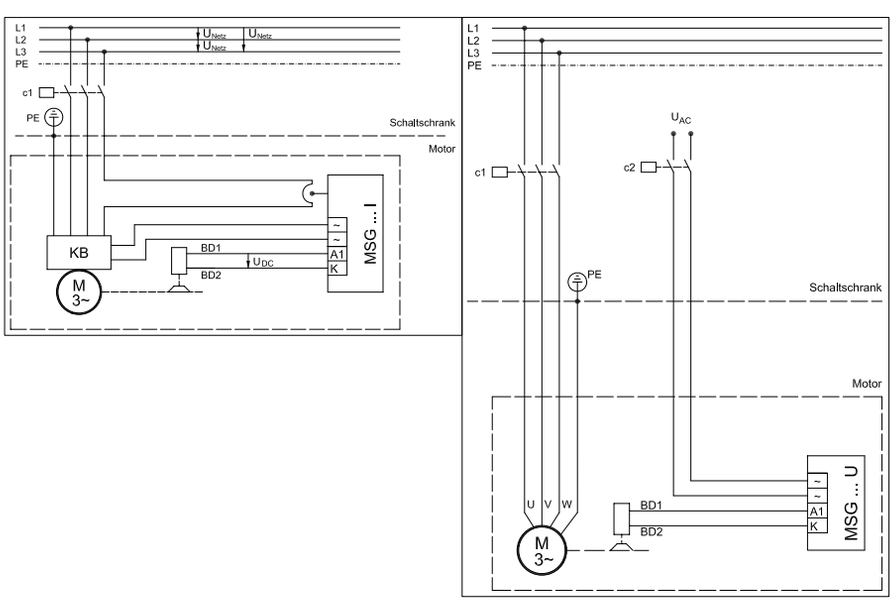

Rectifier Connection on Motor Terminal Block or Cage Clamp

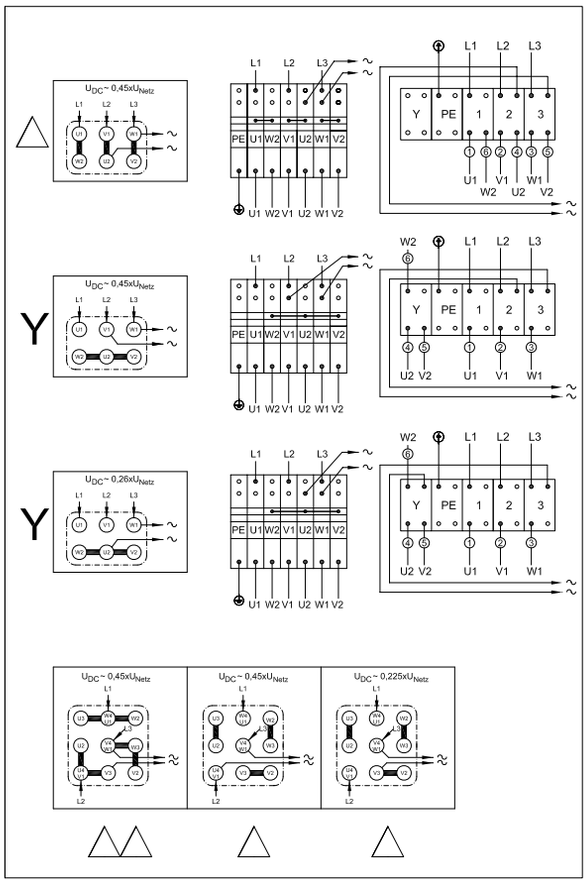

Brake connection, operation with frequency converter

The voltage present at the motor terminal block when operating with a frequency converter is frequency-dependent. Brakes require a constant voltage, so they need a seperate electrical connection. This is the reason why the brake is not connected to the motor terminals ex- works.

Brake connection, pole-changing motors

The brakes of pole-changing motors need a seperate electrical connection. As is the case with motors for operation with frequency inverters, the brake is not connected to the motor terminals ex-works.

Manual release (HA, HN)

All brakes are available with mechanical manual release on request. Non-latching manual release is the standard version (HN). A latching manual release (HA) can be supplied if required for all brake sizes.

Degree of protection

All BAUER brakes comply with degree of protection IP 65.

Special corrosion protection

If high requirements for corrosion resistance apply, the brakes are available with two levels of enhanced corrosion protection:

CORO1 (C1): Finished with two-component paint to protect against chemically aggressive gases and vapours.

CORO2 (C2): Same finish as CORO1. The screws for the terminal-box cover are non- rusting steel. The mechanical internals of the brake are made of corrosion- proofed material.

CE mark

BAUER geared motors with externally mounted spring-loaded brakes bear the CE mark.

The brakes comply with:

- the **Machinery Directive (2006/42/EG)**
  Manufacturer's declaration available on request
- the **Low-Voltage Directive (2006/95/EG)**
  Documented by the CE mark
- the **EMC Directive (2004/108/EG)**
  Documented by the CE mark

See BAUER special print SD33.. for more information.

Explosion protection

Brakes for use in hazardous areas are subject to special regulations. Please consult our support specialists in these special cases.

Back stop (RR, RL)

Motors of size D..09 (1,1kW) up to D..18 (30kW) are available with backstop. The locking rotational direction clockwise (RR) or anticlockwise (RL) is to given in the order. The reference is the connection side of the gearbox. Should the connection side not be clearly defined, gearbox side "V" (front) will be assumed (see chapter 17 Dimensions drawing "Motor with back stop").

Note that the back-stop functionality on a motor operating with a frequency converter is guaranteed only at rotor speeds above 670/min.

It is advisable to consult BAUER for applications in corrosive atmospheres, especially for motor-down installed positions.

Second motor shaft stub (ZW, ZV)

The motors are also available on request with a second motor shaft extension in design ZW (shaft with key) or ZV (shaft with square end).

Half the central motor's rated power is available at each of the two shafts. Permissible radial loads available on request. Guards are not included in the scope of supply (for dimensional drawing see chapter 17).

Motors with brakes are available on request with a second shaft stub extended through the brake.

Protective hood over fan cowl (D)

A protective hood over the fan cowl is recommended for outdoor installations where the motor is pointing upward and subject to severe or prolonged exposure to water (dimensional drawing, see chapter 17).

This protective hood is mandatory for upright explosion-proof motors.

A special fan cowl for the textiles industry is available on request at extra cost. This design prevents airborne fibres and fluff clogging the fan cowl.

Motor-independent fan (FV)

For special applications, standard motors and brake motors of size D08 and larger are available with externally mounted motor-independent fans. The standard line voltage of the motor-independent fan matches the voltage of the geared motor (dimensional drawing for motor-independent fan, see chapter 17).

The independent fans are supplied as standard with Bayonet-fitting for standard motors sizes D..16 and D..18 and brake motors sizes D..11 to D..18. Standard enclosure IP66.

Technical Data:
Multivolt Conception Running capacitor for single phase duty enclosed as standard.

Mode	Frame size	Blower diameter	Range of voltage		max. permissible current	max. power input
		(mm)	50 Hz	60 Hz	(A)	W
1 ~ ⊥ (Δ)	63	118	230-277	230-277	0,12	32
	71	132	230-277	230-277	0,12	33
	80	150	230-277	230-277	0,14	37
	90	169	230-277	230-277	0,29	65
	100	187	230-277	230-277	0,30	75
	112	210	230-277	230-277	0,37	94
	132	250	230-277	230-277	0,60	149
	160-200	300	230-277	---	0,96	236
3 ~ Y	63	118	380-500	380-575	0,06	28
	71	132	380-500	380-575	0,06	29
	80	156	380-500	380-575	0,06	34
	90	169	380-500	380-575	0,19	75
	100	187	380-500	380-575	0,17	94
	112	210	380-500	380-575	0,17	99
	132	250	380-500	380-575	0,25	148
	160-200	300	380-500	380-575	0,54	360
3 ~ Δ	63	118	220-290	220-332	0,10	28
	71	132	220-290	220-332	0,10	28
	80	156	220-290	220-332	0,10	34
	90	169	220-290	220-332	0,33	78
	100	187	220-290	220-332	0,31	87
	112	210	220-290	220-332	0,31	103
	132	250	220-290	220-332	0,45	146
	160-200	300	220-290	220-332	0,91	360

Shaft encoder (G)

Bauer gear motors can be fitted with either an incremental encoder or an absolute encoder for special applications. Both the standard incremental encoder and the absolute encoder are optimised and suitable for use with all modern inverters.

Bauer standard encoders as from motor frame size D05 (0,18kW) are protected against mechanical damage by means of a protective cover (Additional Dimension Sheet see chapter 17).

Special features: standard incremental encoder:
- Robust mount
- Degree of protection IP66
- EMC-tested
- Protected against polarity reversal
- Supply voltage 8-30 V DC
- A-, B- and N-lines and inverted signals or output signals as preferred
- HTL output circuit (TTL on request)
- 1024 pulses per revolution

Special features: standard absolute encoder
- Enclosure: IP66
- Steps per revolution: 8192 (13 Bit)
- Number of turns: 4096 (12 Bit) shaft turns
- Execution of electronic: SSI (Synchronous-Serial Interface)
- Output code: Gray-Code
- Supply voltage: 11-27 VDC
- Loss efficiency (no load): ≤ 3 Watt
- Output driver: RS-422 (2-wire)

Functional description

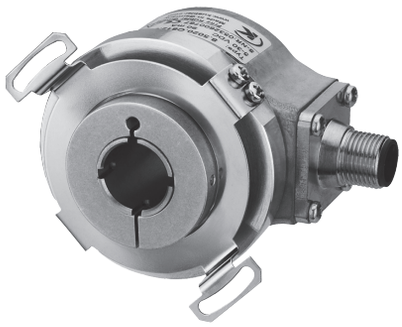

Incremental encoders are used to determine motor shaft positions. An incremental encoder detects rotary motion and coverts it into an electrical output signal. An encoder disc with a specific number of periods per rotation senses angular motion. The optoelectronic scanning unit generates signals and issues pulses after the signals have been processed in trigger stages. The resolution is defined by the number of opaque and clear segments on the encoder disc. For example, an encoder with 1024 lines will generate a sequence of 1024 pulses for one full rotation.

The combination of an incremental encoder and a frequency converter allows optimised solutions to be developed, such as

- speed controllers with a wide adjustment range
- accurate speed control
- constant-speed control
- position control

Supply voltage:	10–30 V DC with HTL 5 V DC with differential TTL
Output signals:	HTL A, B and N tracks; optional TTL
Pulses per revolution:	1024 Optional 512, 2048, ..., 4096, or others on request
Enclosure rating:	IP 65 (optional IP 67)
Temperature range:	-40 °C to +85 °C

Electrical specifications

Output voltage	RS 422 (TTL compatible)	RS 422 (TTL compatible)	Differential	Differential (7272)
Supply voltage	5–30 V DC	5 V ±5%	10–30 V DC	5–30 V DC
No-load current consumption With inversion:	typ. 40 mA / max. 90 mA	typ. 40 mA max. 90 mA	typ. 50 mA / max. 100 mA	typ. 50 mA max. 100 mA
Allowable load per channel: Pulse rate:	max. ±20 mA max. 300 kHz	max. ±20 mA max. 300 kHz	max. ±20 mA max. 300 kHz	max. ±20 mA max. 300 kHz[3]
High signal level:	min. 2.5 V	min. 2.5 V	min. UB – 1 V	min. UB – 2.0 V
Low signal level:	max. 0.5 V	max. 0.5 V	max. 0.5 V	max. 0.5 V
Rise time t_r	max. 200 ns	max. 200 ns	max. 1 µs	max. 1 µs
Fall time t_f	max. 200 ns	max. 200 ns	max. 1 µs	max. 1 µs
Outputs short-circuit proof[1]	Yes[2]	Yes[2]	Yes	Yes
Supply voltage reverse polarity protection:	Yes	No	Yes	No
CE compliant in accordance with EN 61000-6-2, EN 61000-6-3 and EN 61000-6-4				

[1] With applied supply voltage within specified range
[2] Only one channel may be shorted at the same time:
(with UB = 5 V, shorting to another channel, 0 V or +UB is allowed)
(with UB = 5–30 V, shorting to another channel or 0 V is allowed)
[3] Maximum cable length 30 m

Incremental rotary encoder

Plug end view with male pin insert

Connector type	8-pin M12 plug	12-pin M23 plug	MIL connector 10-pin
Layout	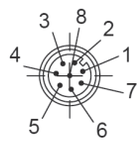	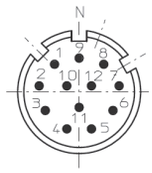	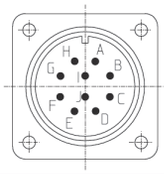
Order code:	8.5000.XXX3.XXXX 8.5000.XXX4.XXXX	8.5000.XXX7.XXXX 8.5000.XXX8.XXXX	8.5000XXXY.XXXX
Mating connector:	05.CMB-8181-0	8.0000.5012.0000	8.0000.5062.0000

Signal assignments

Signal:	0 V GND	+U_B	0 V Sens	+Ub Sens	A	A	B	B	Z	Z	Shield
M23 Multifast, 12-pin connector; pin assignments: M12 Eurofast, 8-pin connector; pin assignments:	10 1	12 2	11	2	5 3	6 4	8 5	1 6	3 7	4 8	1) 1)
Military version; 10-pin connector; pin assignments:	F	D		E	A	G	B	H	C	I	J[1])
Cable; lead colour:	WH	BN	GY PK	RD BU	GN	YE	GY	PK	BU	RD	Shield

[1] Shield connected to plug housing. **Insulate unused outputs before putting into service.**

Functional description

Absolute encoders detect both angular and rotational motions and convert them into electrical signals. In contrast to incremental encoders, with absolute encoders the current position is directly available. If an absolute encoder is moved mechanically while it is switched off, after the power is switched on again the current position can be read out immediately and directly. Absolute encoders are available in single-turn and multi-turn versions.

Profibus DP interface

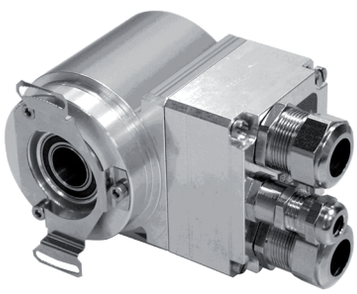

Specifications

Supply voltage	11–27 VDC
No-load current consumption	< 350 mA
Total resolution [1]	≤ 33 bits
Number of steps per revolution, standard/extended [1]	≤ 8,192 / ≤ 32,768
Number of turns, standard/extended [1]	≤ 4,096 / ≤ 256,000
Profibus DP V0	IEC 61158, IEC 61784
PNO encoder profile	Class 1/Class 2
parameters [1]	Counting direction switchover, scaling function, etc.
Output code [1]	Binary, Gray, truncated Gray
Address	3–99, set using a rotary switch
Baud rate	9.6 kbit/s to 12 Mbit/s
TR-specific functions [1]	Gear and speed outputs
Data width on bus for actual position	≤ 25 bits
Permissible mechanical speed	≤ 12,000 rpm
Shaft load	Own mass
Bearing life	≥ 3.9×10^{10} revolutions at
- speed	≤ 6,000 rpm
- operating temperature	≤ 60 °C
Shaft diameter [mm]	8H7, 10H7, 12H7
Permissible angular acceleration	≤ 10^4 rad/s^2
Moment of inertia	2.5×10^{-6} kg m^2 (typical)
Start-up torque at 20 °C	2 Ncm (typical)
Weight	0.3–0.5 kg

1 Configurable parameter

Ambient conditions

Vibration (EN 60068-2-6:1996)	≤ 100 m/s^2, sinusoidal 50–2,000 Hz
Shock (EN 60068-2-27:1995)	≤ 1000 m/s^2, half-cycle sinusoidal 11 ms
EMC	
- Interference emission compliant with EN 61000-6-3:2007	
- Interference immunity compliant with EN 61000-6-2:2006	
Operating temperature	0 °C to +60 °C; optionally -20 °C to +70 °C
Storage temperature	-30 °C to +80 °C, dry
Relative humidity (EN 60068-3-4:2002)	98%, non condensing
Enclosure rating (EN 60529:1991)[2]	IP 65

2 With mating connector fitted and/or cable glands fitted and tightened

SSI interface



Specifications

Supply voltage	11–27 VDC
No-load current consumption	< 350 mA
Total resolution [1]	≤ 25 bits
Number of steps per revolution [1]	≤ 8,192
Number of rotations, standard [1]	≤ 4,096
Number of rotations, extended [1]	≤ 256,000
SSI	Synchronous Serial Interface
Clock input	Optocoupler
Data output	RS-422, 2-wire
Clock frequency	80 kHz – 1 MHz
Monostable time t_M	16 µs ≤ t_M ≤ 25 µs (20 µs typical)
Output code [1]	Binary, Gray, BCD
Output format [1]	Standard, Tannenbaum, SSI + CRC, 26-bit cycle, variable number of data bits
Negative values [1]	Sign and magnitude, twos complement
SSI or parallel special bits [1]	Limit switch, overspeed, direction indication, motion indication, error indication, parity
F/R [1]	Counting direction
Preset [1]	Electronic alignment
Logic levels	"0" < +2 VDC; "1" = supply voltage
Permissible mechanical speed	≤ 12,000 rpm
Shaft load	Own mass
Bearing life	≥ 3.9 x 10^{10} revolutions at
- speed	≤ 6,000 rpm
- operating temperature	≤ 60 °C
Shaft diameter [mm]	8H7, 10H7, 12H7
Permissible angular acceleration	≤ 10^4 rad/s^2
Moment of inertia	2.5 x 10^{-6} kg m^2 (typical)
Start-up torque at 20 °C	2 Ncm (typical)
Weight	0.3–0.5 kg
Optional	
- incremental signals, RS422 levels	K1+, K1-, K2+, K2- with 1024 or 2048 pulses

[1)] Configurable parameter

Ambient conditions

Vibration (EN 60068-2-6:1996)	≤ 100 m/s^2, sinusoidal 50–2,000 Hz
Shock (EN 60068-2-27:1995)	≤ 1000 m/s^2, half-cycle sinusoidal 11 ms
EMC	
- Interference emission compliant with EN 61000-6-3:2007	
- Interference immunity compliant with EN 61000-6-2:2006	
Operating temperature	0 °C to +60 °C; optionally -20 °C to +70 °C
Storage temperature	-30 °C to +80 °C, dry
Relative humidity (EN 60068-3-4:2002)	98%, non condensing
Enclosure rating (EN 60529:1991)[2]	IP 65

[2)] With mating connector fitted and/or cable glands fitted and tightened

In addition to the angular position within a rotation, multiturn encoders detect multiple rotations. An internal reduction gear mechanism connected to the motor shaft is used to detect the number of turns. Consequently, the value measured by a multiturn encoder consists of the current angular position and the number of turns. As with incremental encoders, the reading is calculated and output via various interface modules, depending on the interface.

On request, a large range of motor frames can be fitted with sensor bearings. The output signal from the sensor allows the direction of rotation to be determined, among other things. The number of possible pulse counts depends on the frame size. Please enquire for more information.

Motor and encoder

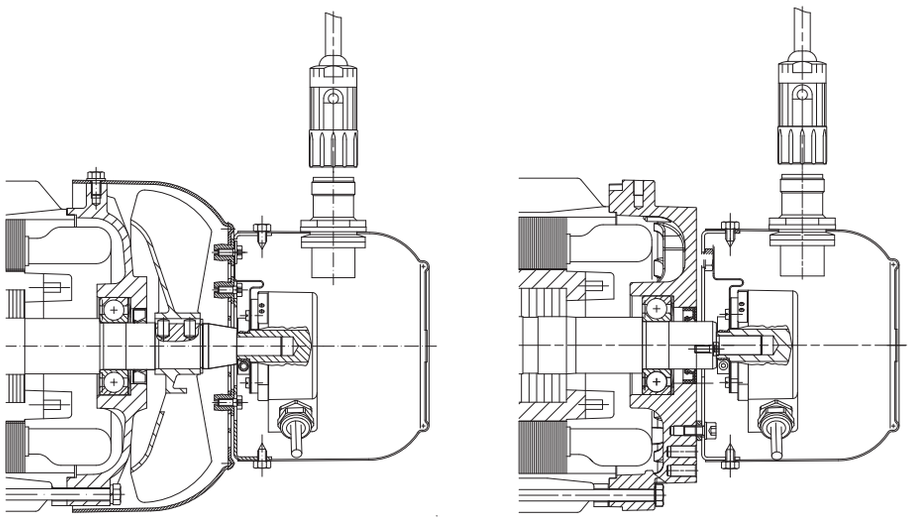

Motor, brake and encoder

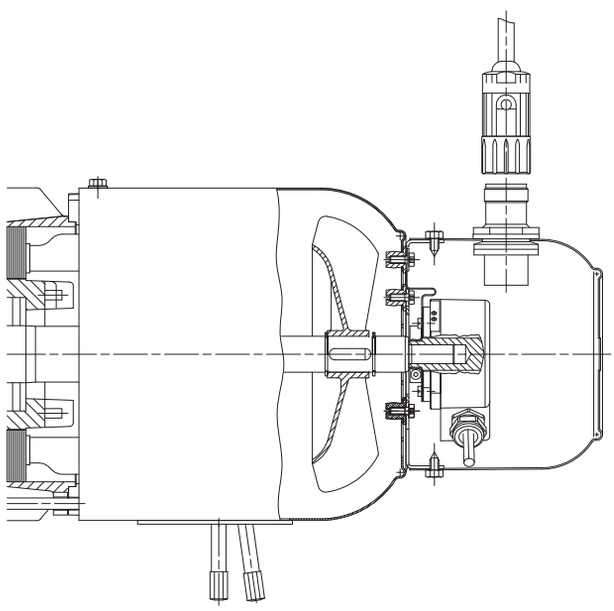

Motor and forced ventilation

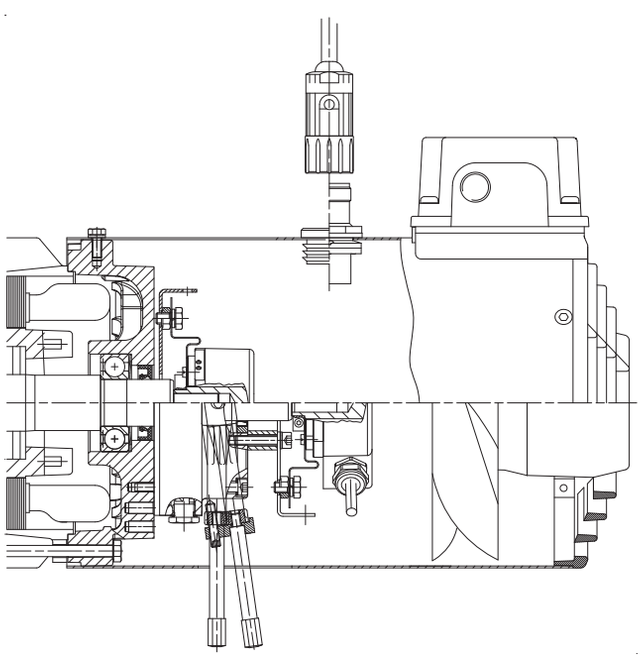

17

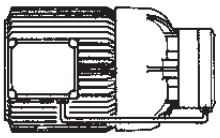

Page

Additional dimensional drawings for motor-mounted components 753-768

Dimensional drawing, standard terminal box
Dimensional drawing, plug-connector terminal box
Dimensional drawings,standard brakes without terminal box
Dimensional drawings for brakes with terminal box
Dimensional drawing, motor with back stop
Dimensional drawing, motor with second shaft end
Dimensional drawing, motor with protective hood
Dimensional drawing, motor with independent fan
Dimensional drawing, motor with brake and independent fan
Dimensional drawing, motor with encoder
Dimensional drawing, motor with brake and encoder
Dimensional drawing, motor in IEC design

Standard terminal box

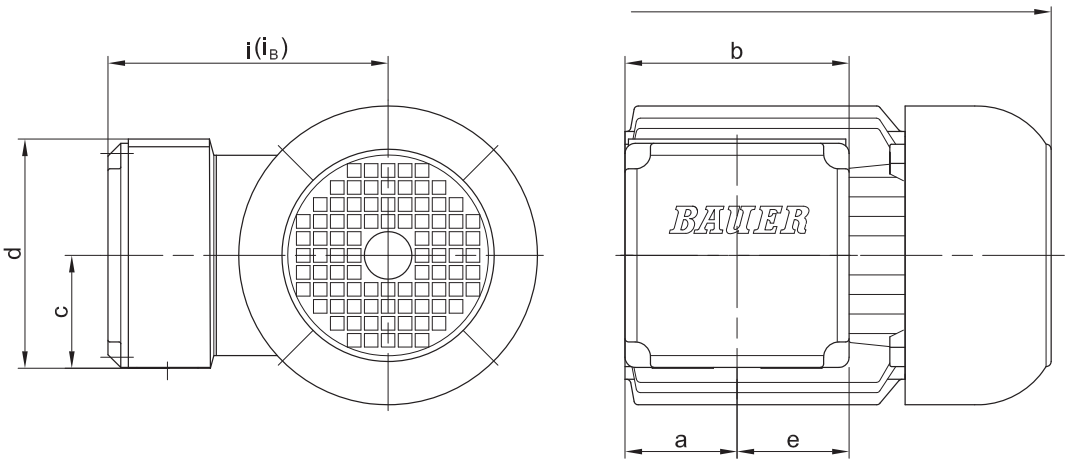

Motor	Masse (mm)						Code	Kabeleinführung Haupt (M) Neben (N)	max. Schlüsselweite für Kabelverschraubung
	a	b	c	d	e	i			
D04..	42.5	88	44	88	44	90	KAG1	M=2xM20x1.5	24 mm
D05..	50	100	50	100	50	100	KAG2	M=2xM25x1.5	29 mm
D06..	50	100	50	100	50	100	KAG2	M=2xM25x1.5	29 mm
D07..	50	100	50	100	50	100	KAG2	M=2xM25x1.5	29 mm
D..08..	50	100	50	100	50	115	KAG2	M=2xM25x1.5	29 mm
D..09..	50	100	50	100	50	124	KAG2	M=2xM25x1.5	29 mm
D..11..	62	132	66.5	135	66	181	TB222	M=2xM32x1.5; N=2xM25x1.5	-
D..13..	78	156	78.5	158	78	217	TB322	M=2xM40x1.5; N=2xM25x1.5	-
D..16..	74	156	78.5	158	78	243	TB322	M=2xM40x1.5; N=2xM25x1.5	-
D..18..	94	200	100.5	201	100	288	TB422	M=2xM50x1.5; N=2xM25x1.5	-

Motor mit Bremse	Masse (mm)						Code	Kabeleinführung Haupt (M) Neben (N)	max. Schlüsselweite für Kabelverschraubung
	a	b	c	d	e	i_B			
D04..	42.5	88	44	88	44	90	KAG1	M=2xM20x1.5	24 mm
D05..	50	100	50	100	50	100	KAG2	M=2xM25x1.5	29 mm
D06..	50	100	50	100	50	100	KAG2	M=2xM25x1.5	29 mm
D07..	50	100	50	100	50	100	KAG2	M=2xM25x1.5	29 mm
D..08..	50	100	50	100	50	115	KAG2	M=2xM25x1.5	29 mm
D..09..	50	100	50	100	50	124	KAG2	M=2xM25x1.5	29 mm
D..11..	62	132	66.5	135	66	181	TB222	M=2xM32x1.5; N=2xM25x1.5	-
D..13..	78	156	78.5	158	78	217	TB322	M=2xM40x1.5; N=2xM25x1.5	-
D..16..	74	156	78.5	158	78	243	TB322	M=2xM40x1.5; N=2xM25x1.5	-
D..18..	94	200	100.5	201	100	288	TB422	M=2xM50x1.5; N=2xM25x1.5	-

The actual gearbox design can vary from the geometry shown.

Plug-connector terminal box

Standardausführung (zwei Bügel)

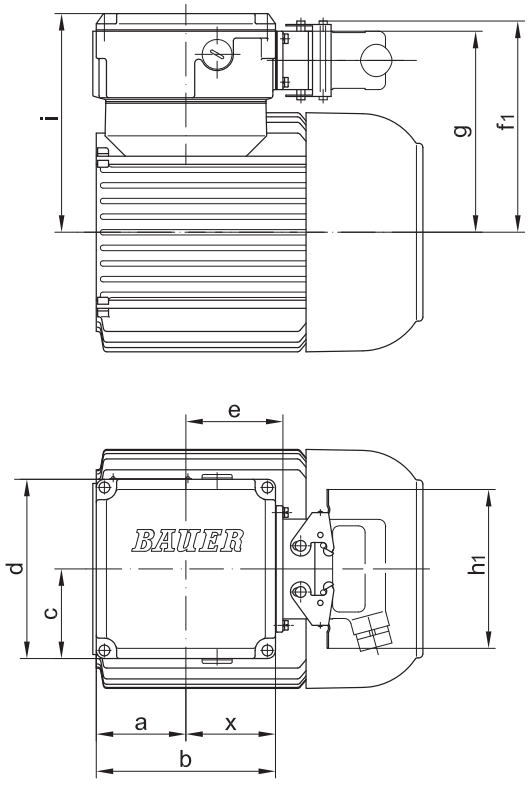

Option für DESINA (ein Bügel)

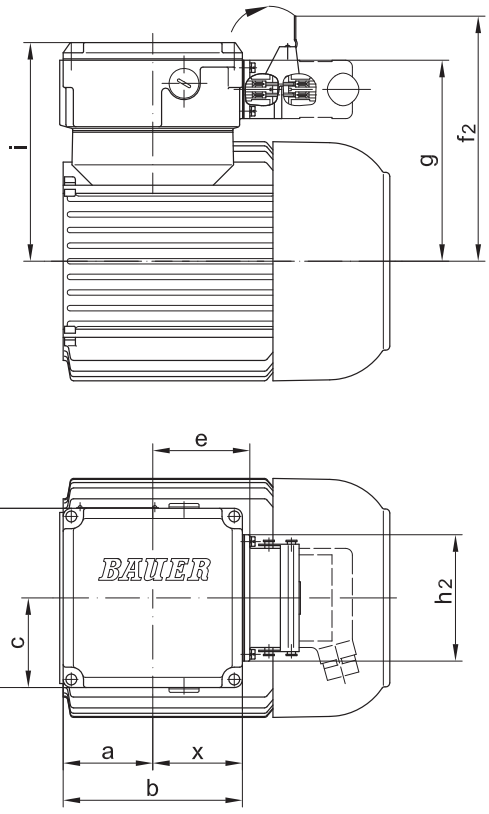

Motor	Grösse Klemmenkasten	a	b	c	d	e	f_1	f_2	g	h_1	h_2	i	x
D04	TBS1	30	90	52.5	106	49	118.5	147	111	117	93	124.5	46
D05	TBS1	57	90	52.5	106	49	123.5	152	116	117	93	129.5	46
D06	TBS1	45	90	52.5	106	49	125.5	154	118	117	93	131.5	46
D07	TBS1	45	90	52.5	106	49	125.5	154	118	117	93	131.5	46
D..08	TBS1	45	90	52.5	106	49	143.5	172	136	117	93	149.5	46
D..09	TBS2	62	132	66	135	71.5	158.5	187	158	117	93	164	68.5
D..11	TBS2	62	132	66	135	71.5	175.5	191	166	117	93	181	68.5
D..13	TBS3	78	156	78	158	83.5	199	227.5	191.5	117	93	216	79.5
D..16	TBS3	74	156	78	158	83.5	225	253.5	225	117	93	242	79.5
D..18	TBS4	94	200	100	201	105.5	257	299	257	117	93	287	100.5

The actual gearbox design can vary from the geometry shown.

Standard brakes

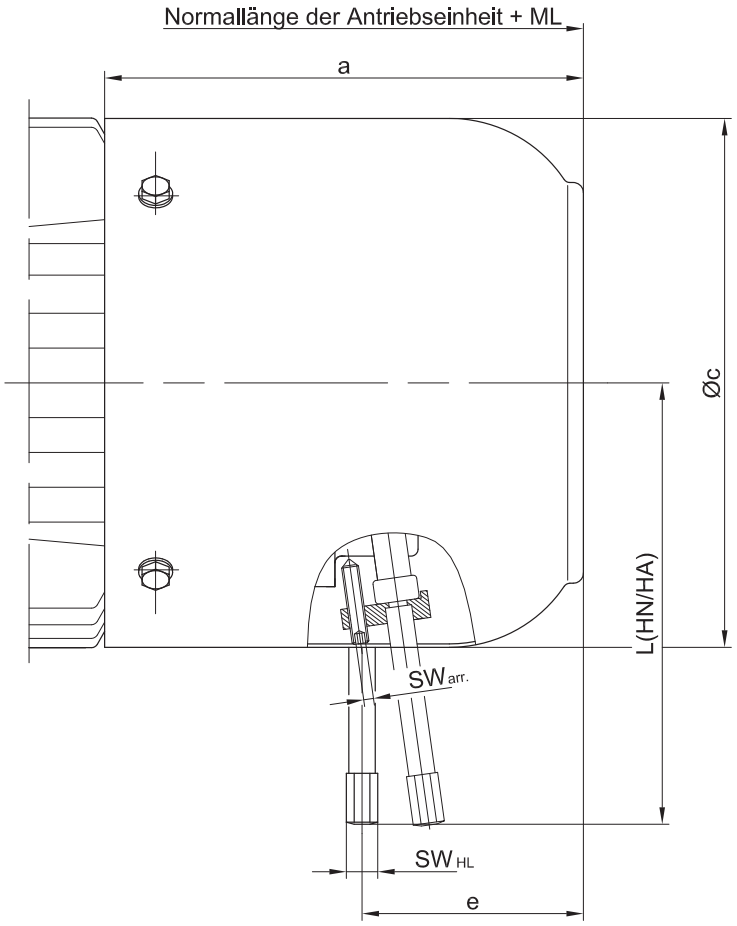

Motor Typ	Bremse Typ	ML(mm) Mehrlänge mit Bremse	Masse (mm)					
			a	Øc	e	L(HN/HA)	SW_{HL}	$SW_{arr.}$
D04	E003	43.5	97	110.5	55	96/102	11	11
D05		42	102	123	57			
D06					56.5			
D07	E003 / E004							
D..08	ES(X)010	66	141	156	68	132	8	2.5
D..09	ES(X)010	93	173	176	99	132	8	2.5
	ES(X)027				91	162		
D..11	ES(X)027	98	195	218	103	162	8	2.5
	ES(X)040				100	172		
	ES(X)070				96	190	12	4
D..13	ES(X)040	111	225	258	125	202	12	4
	ES(X)070				121	225		
	ES(X)125				116	223		
D..16	ES(X)125	144	280	310	148	244	12	4
	ES(X)200				141	256		
	ZS(X)300				112			
D..18	ES(X)250	149	304	348	153	286	12	4
	ZS(X)500				123		19	5

HN = Handlüftung nicht arretierbar HA = Handlüftung arretierbar

The actual gearbox design can vary from the geometry shown.

Motor with back stop

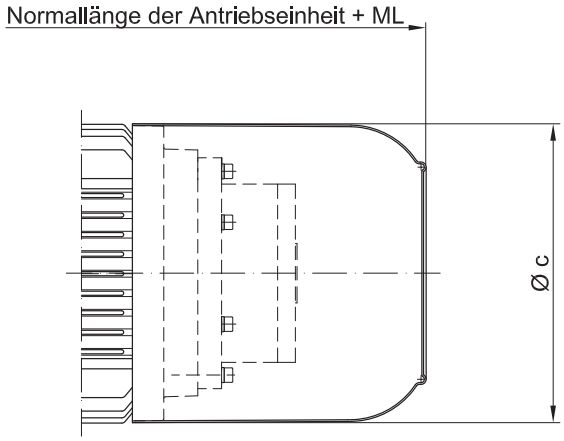

Motor	ML (mm) Mehrlänge mit Rücklaufsperre	Masse (mm) c	Mehrgewicht kg
D..08	66	156	6.5
D..09	87	181	6.5
D..11	96	228	8
D..13	108	266	13.5
D..16	144	322	16
D..18	149	368	17

The actual gearbox design can vary from the geometry shown.

Dimensions drawing

Motor with second shaft end

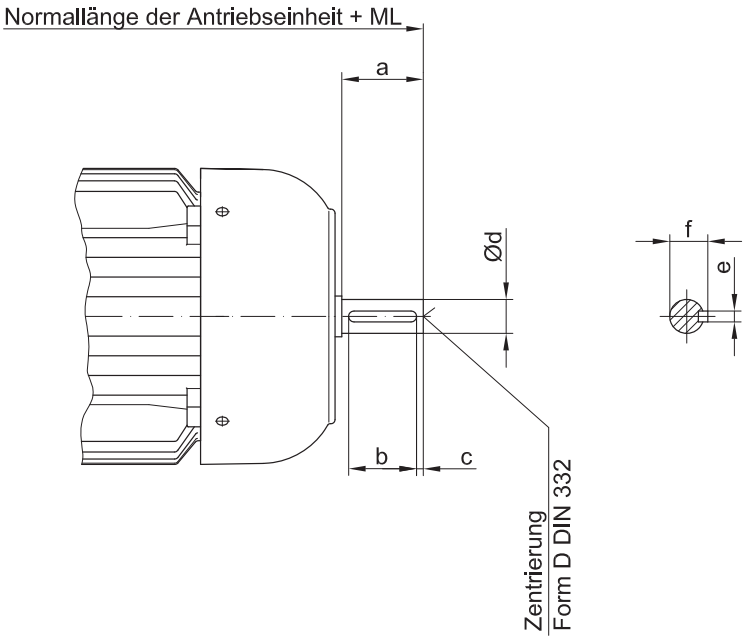

Motor	ML(mm) Mehrlänge bei zweitem Wellenende	Masse (mm)						Zentrierung
		a	b	c	d	e	f	DIN 332
D04	20	15	-	-	8g6	-	-	-
D05	25	20	-	-	10k6	-	-	-
D06	25	20	-	-	10k6	-	-	-
D07	25.5	20	-	-	10k6	-	-	-
D..08	45	40	30	5	16k6	5	18	D 5
D..09	55	50	40	5	20k6	6	22.5	D 5
D..11	65	60	50	5	25k6	8	28	D 8
D..13	85	80	60	10	35k6	10	38	D 12
D..16	115	110	90	10	40k6	12	43	D 16
D..18	115	110	90	10	45k6	14	48.5	D 16

The actual gearbox design can vary from the geometry shown.

Motors with brake and second shaft end

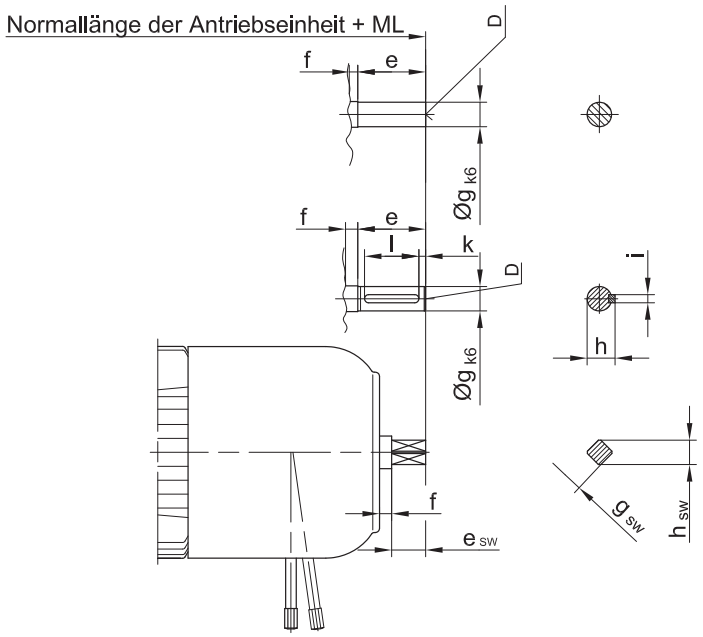

Motor	Bremse	Mehrlänge (mm)		Masse (mm)											Zentrierung D 332	
		ML	ML_{SW}	e	e_{SW}	f	g	g_{SW}	h	h_{SW}	i	k	l			SW
D04	E003	63	-	15	-	5	8	-	-	-	-	-	-	-	-	-
D05				20			10									
D06																
D07	E003 / E004															
D..08	ES(X)..	121	96 *	50	25 *	5	18	SW14 *	20.5	18 *	6	5	40	D6	D4 *	
D..09		98	123 *													
D..11		153.5 *	128	50 *	25		20 *	SW14	22.5 *	18	6 *	5 *	40 *	D6 *	D4	
D..13		176 *	156	60 *	40		28 *	SW22	31 *	28	8 *		50 *	D10 *	D10	
D..16	ES(X).. / ZS(X)..	208.5 *	188.5			4.5										
D..18		359 *	194.5			5										

* Sonderausführung

** mit Handlüftung

The actual gearbox design can vary from the geometry shown.

Dimensions drawing

Motor with second shaft end

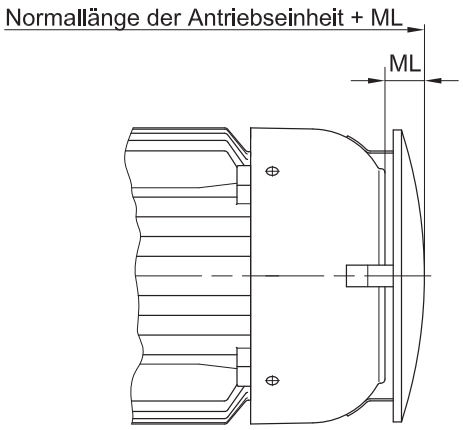

Motor	ML(mm) Mehrlänge bei angebauter Schutzhaube	Mehrgewicht kg
D06	18	0.12
D07	18	0.12
D..08	20	0.14
D..09	22	0.18
D..11	29	0.30
D..13	30	0.58
D..16	47	1.76
D..18	54	5.5

The actual gearbox design can vary from the geometry shown.

Motor with independent fan

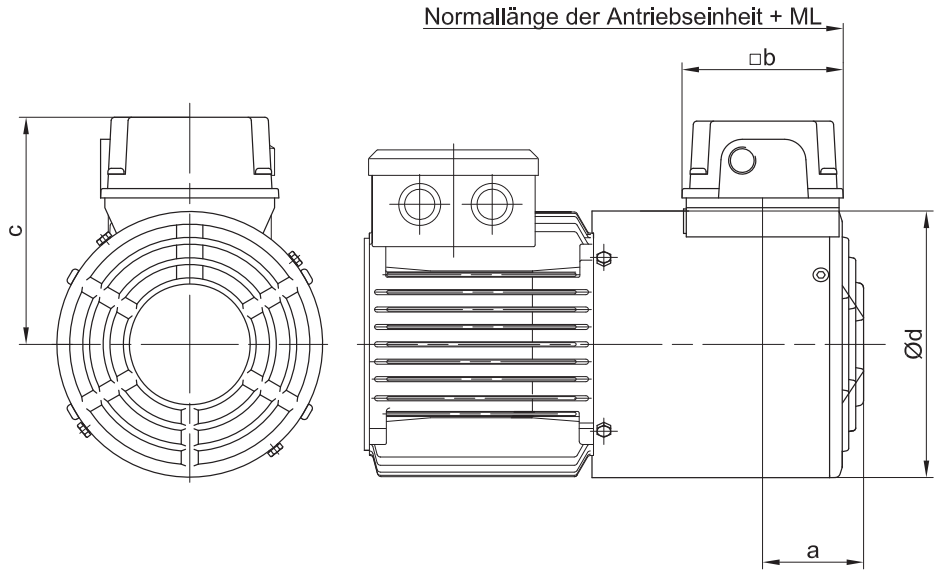

Antriebs-motor	Lüfter-motor			400 V	ML(mm) Mehrlänge Fremdlüfter	Masse (mm)				Mehrgewicht
Typ	Typ	kW	r/min	A		a	b	c	d	~ kg
D..08	FV D08	0.019	2670	0.029	92	69.5	95	131.5	157	2.2
D..09	FV D09	0.046	2820	0.106	97	69.5	95	141.5	176	2.7
D..11	FV D11	0.051	2660	0.110	97	79.5	95	162.5	219	3.2
D..13	FV D13	0.073	2820	0.169	119	78.8	95	182	258	4.6
D..16✳	FV D16	0.154	2760	0.347	144	78.8	95	208.5	311	6.4
D..18✳	FV D18	0.154	2760	0.347	303	78.8	95	208.5	348	8.4

✳ mit Bajonettverschluss

The actual gearbox design can vary from the geometry shown.

Motor with brake and independent fan

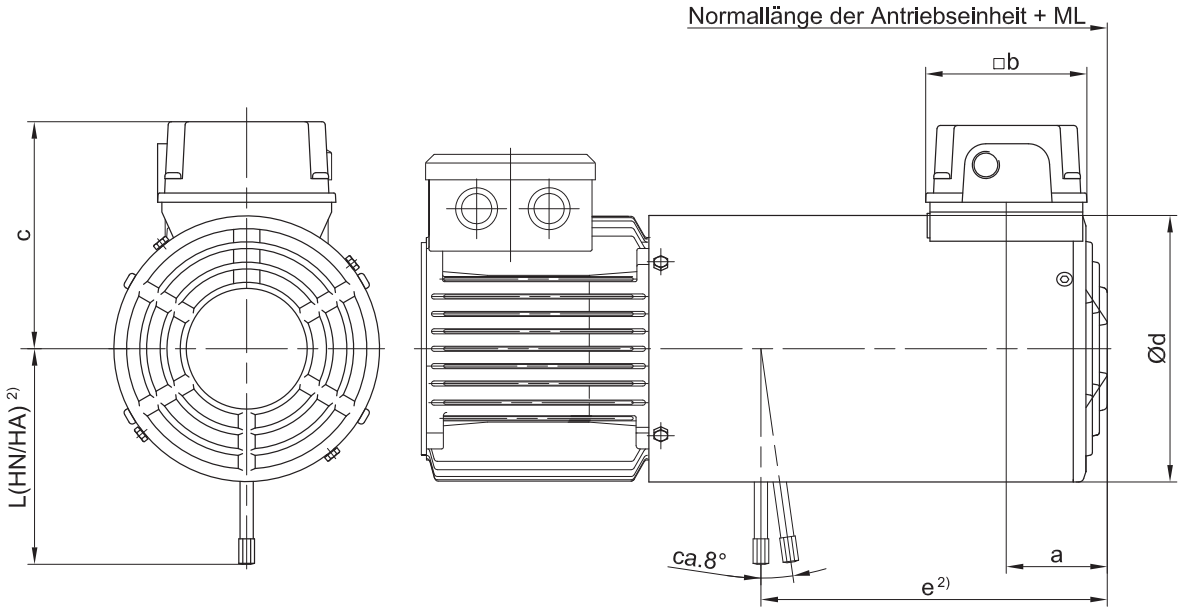

Motor	Bremse	ML(mm) 1) Mehrlänge bei angebauter Bremse und Fremdlüfter	Masse (mm)						Mehrgewicht
			a	b	c	Ød	e 2)	L(HN/HA) 2)	~kg
D..08	ES(X)010	202	59	95	131.5	157	204	132	2.6
D..09	ES(X)010	214	69.5	95	141.5	176	220	132	3.3
	ES(X)027						212	162	3.3
D..11✳	ES(X)027	221	69.5	95	162.5	219	226	162	4.0
	ES(X)040						223	172	4.0
	ES(X)070						218	184	4.0
D..13✳	ES(X)040	237	79.5	95	182	258	254	202	5.7
	ES(X)070						250	225	5.7
	ES(X)125						245	223	5.7
D..16✳	ES(X)125	294	78.8	95	208.5	311	298	244	7.9
	ES(X)200						291	256	7.9
	ZS(X)300						262		7.9
D..18✳	ES(X)250	303	78.8	95	208.5	348	307	286	10.9
	ZS(X)500						277		

✳ mit Bajonettverschluss

1) Die Mehrlänge bezieht sich auf das normale Motorteil ohne Bremse.
Übrige Maße siehe jeweiliges Standard-Maßbild.

2) Handlüftung auf Anfrage

The actual gearbox design can vary from the geometry shown.

Motor with encoder with built-on independent fan

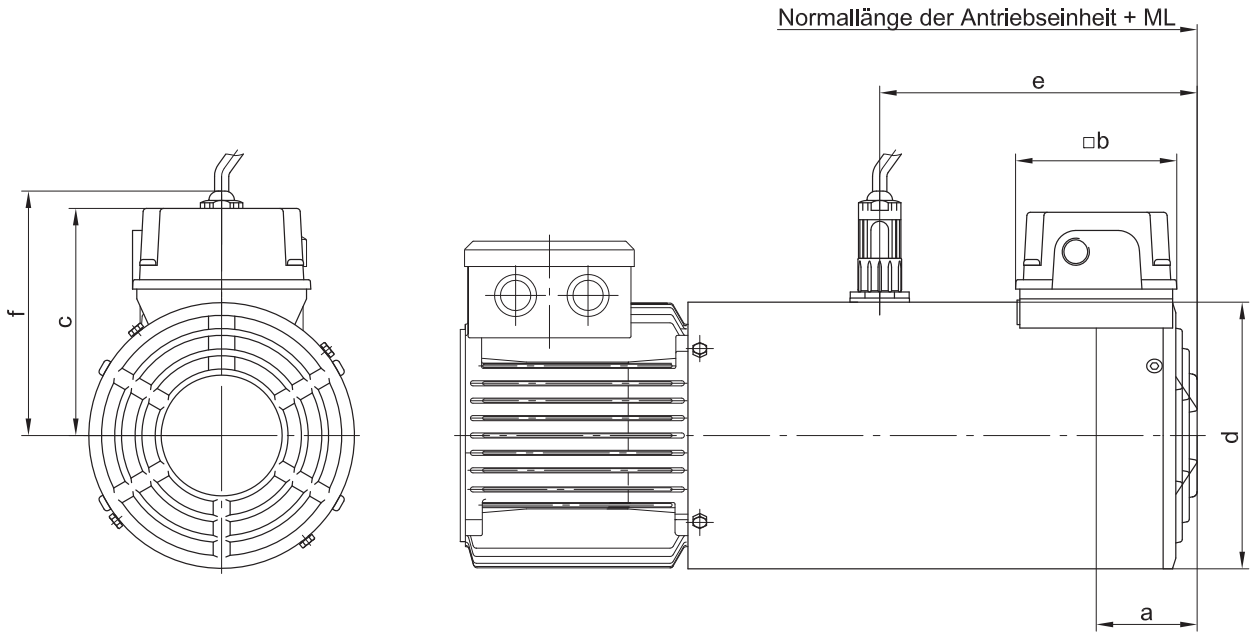

Motor	ML(mm)[1] Mehrlänge bei angebautem Geber und Fremdlüfter	Masse (mm)						Mehrgewicht
		a	b	c	d	e	f	~ kg
D..08	202	59	95	131.5	157	187	144	2.6
D..09	214	69.5	95	141.5	176	192	153.5	3.3
D..11✳	221	69.5	95	162.5	218	192	-	4.0
D..13✳	240	79.5	95	182	258	217	-	5.7
D..16✳	294	78.8	95	208.5	311	252	-	7.9
D..18✳	303	78.8	95	208.5	348	267	-	10.9

✳ mit Bajonettverschluss

1) Die Mehrlänge bezieht sich auf das normale Motorteil ohne Bremse.
Übrige Maße siehe jeweiliges Standard-Massbild.

The actual gearbox design can vary from the geometry shown.

Dimensions drawing

Motor with brake and encoder with built-on independent fan

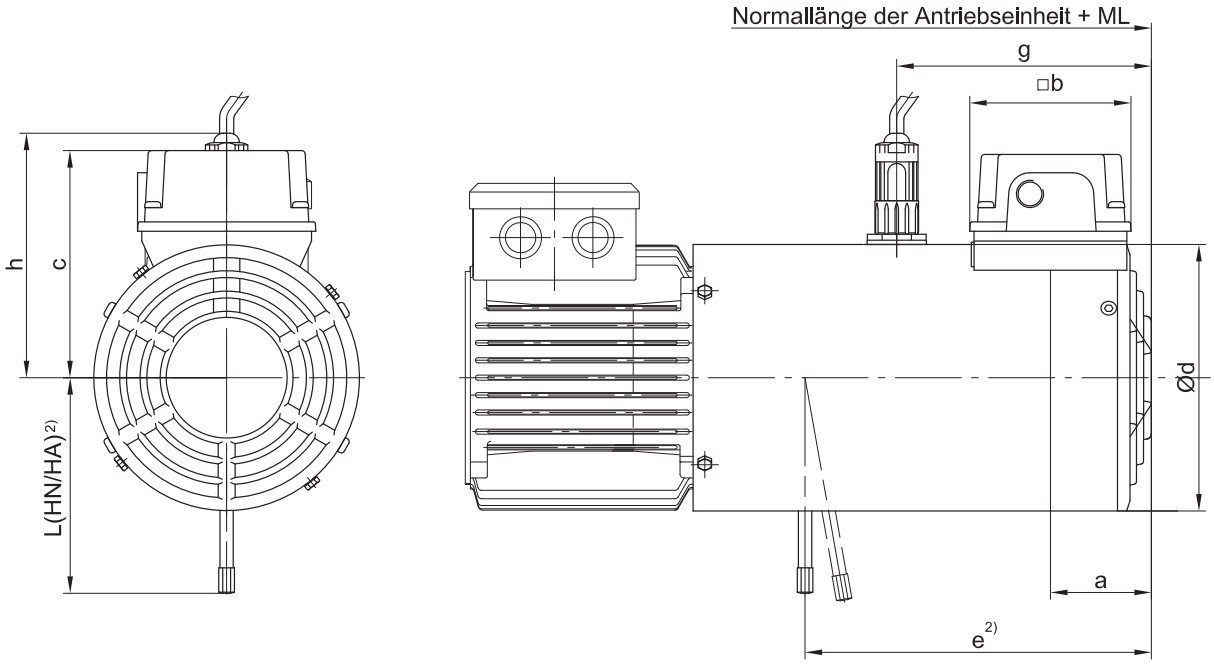

Motor	Bremse	ML(mm)1) Longueur suppl. pour frein, codeur + motoventilateur auxiliaire	Masse (mm)								Mehrgewicht
			a	b	c	Ød	e2)	g	h	L(HN/HA)2)	~ kg
D..08	ES(X)010	202	59	95	131.5	157	204	150	150	132	2.6
D..09	ES(X)010	214	69.5	95	141.5	176	220	160	160	132	3.3
	ES(X)027						212	160		162	3.3
D..11∗	ES(X)027	221	69.5	95	162.5	219	226	155	155	162	4.0
	ES(X)040						223	155		172	4.0
	ES(X)070						218	155		184	4.0
D..13∗	ES(X)040	240	79.5	95	182	258	254	175	175	202	5.7
	ES(X)070						250	175		225	5.7
	ES(X)125						245	175		223	5.7
D..16∗	ES(X)125	294	78.8	95	208.5	311	298	195	195	244	7.9
	ES(X)200						291	195		256	7.9
	ZS(X)300						262	195			7.9
D..18∗	ES(X)250	303	78.8	95	208.5	348	207	212	212	286	10.9
	ZS(X)500						277	212			10.9

∗ mit Bajonettverschluss

1) Die Mehrlänge bezieht sich auf das normale Motorteil ohne Bremse.
Übrige Maße siehe jeweiliges Standard-Maßbild.

2) Handlüftung auf Anfrage

The actual gearbox design can vary from the geometry shown.

Motor with encoder

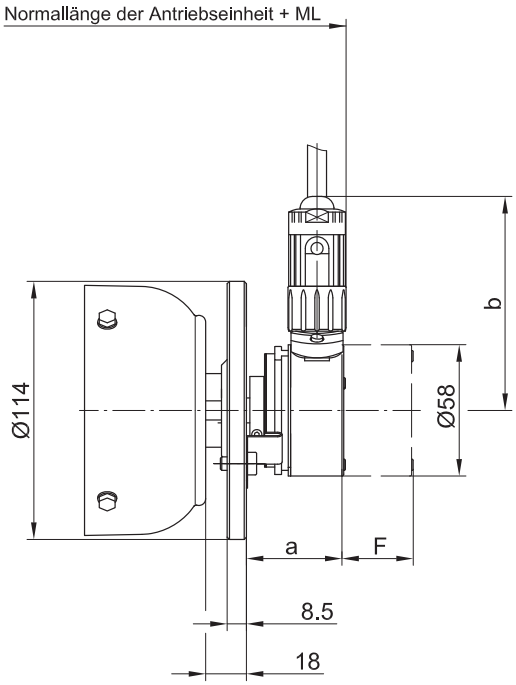

D04

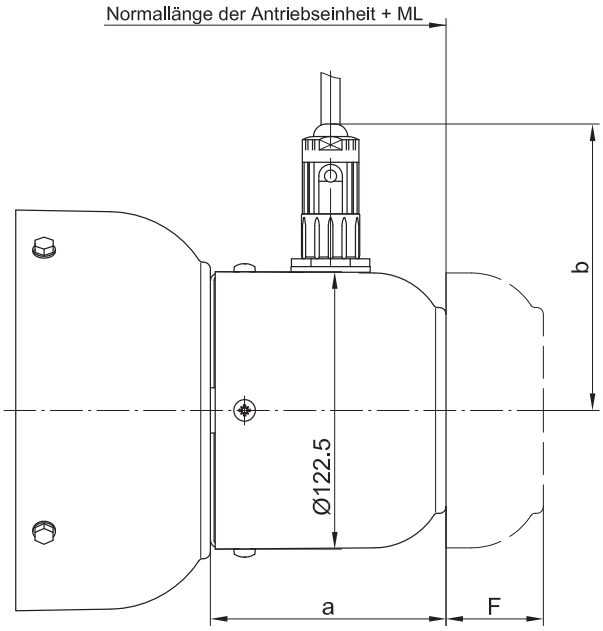

D05-D..18

Motor	ML(mm) Mehrlänge mit Geber	Masse (mm)				Mehrgewicht	Freiraum zur Demontage des Tachos "F"	
		Inkrementalgeber Fa. Kübler Typ 5820		Absolutwertgeber Fa. TR Typ CS58-M			Inkrementalgeber Fa. Kübler Typ 5820	Absolutwertgeber Fa. TR Typ CS58-M
		a	b	a	b	kg		
D04	62.5	43.5	95	69.5	109.5	0.7	30	55
D05	103	98.5	127	98.5	127	0.9	63	88
D06								
D07								
D..08	107	107.5		107.5			41	66
D..09		104		104		0.8	43	68
D..11								
D..13								
D..16	108							
D..18								

The actual gearbox design can vary from the geometry shown.

Motor with brake and encoder

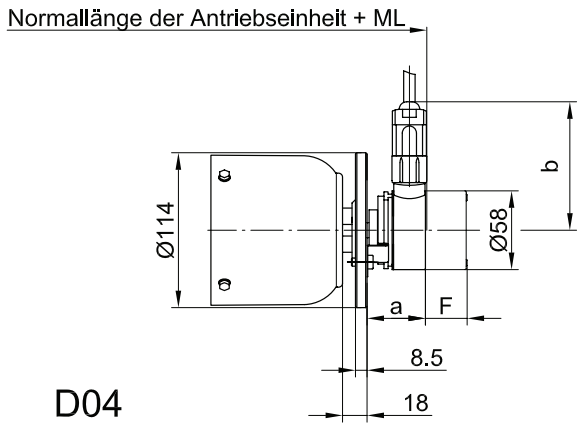

D04

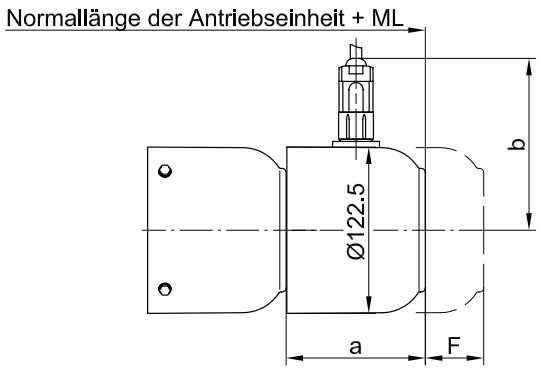

D05-D07

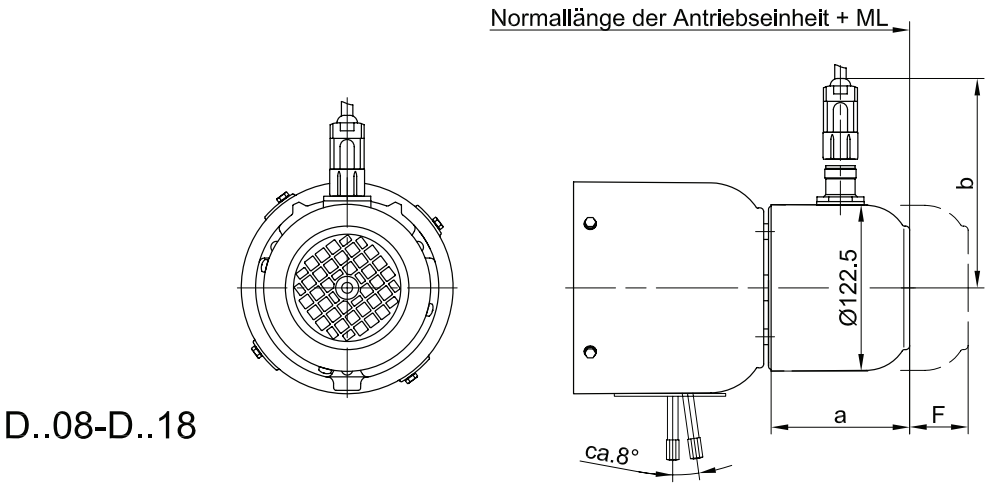

D..08-D..18

Motor	Bremse	ML(mm) Mehrlänge mit Geber und Bremse	Masse (mm) Inkrementalgeber Fa. Kübler Typ 5820 a	Masse (mm) Inkrementalgeber Fa. Kübler Typ 5820 b	Masse (mm) Absolutwertgeber Fa. TR Typ CS58-M a	Masse (mm) Absolutwertgeber Fa. TR Typ CS58-M b	Mehr-gewicht kg	Freiraum zur Demontage des Tachos "F" Inkrementalgeber Fa. Kübler Typ 5820	Freiraum zur Demontage des Tachos "F" Absolutwertgeber Fa. TR Typ CS58-M
D04	E003	105.5	43.5	95	69.5	109.5	0.7	30	55
D05	E003	145	102	127	102	127	0.9	63	88
D06	E003	145							
D07	E003 / E004	145							
D..08	ES(X)..	173.5					0.8	49	74
D..09	ES(X)..	197							
D..11	ES(X)..	200							
D..13	ES(X)..	212							
D..16	ES(X).. / ZS(X)..	248							
D..18	ES(X).. / ZS(X)..	253							

The actual gearbox design can vary from the geometry shown.

Motor in IEC design

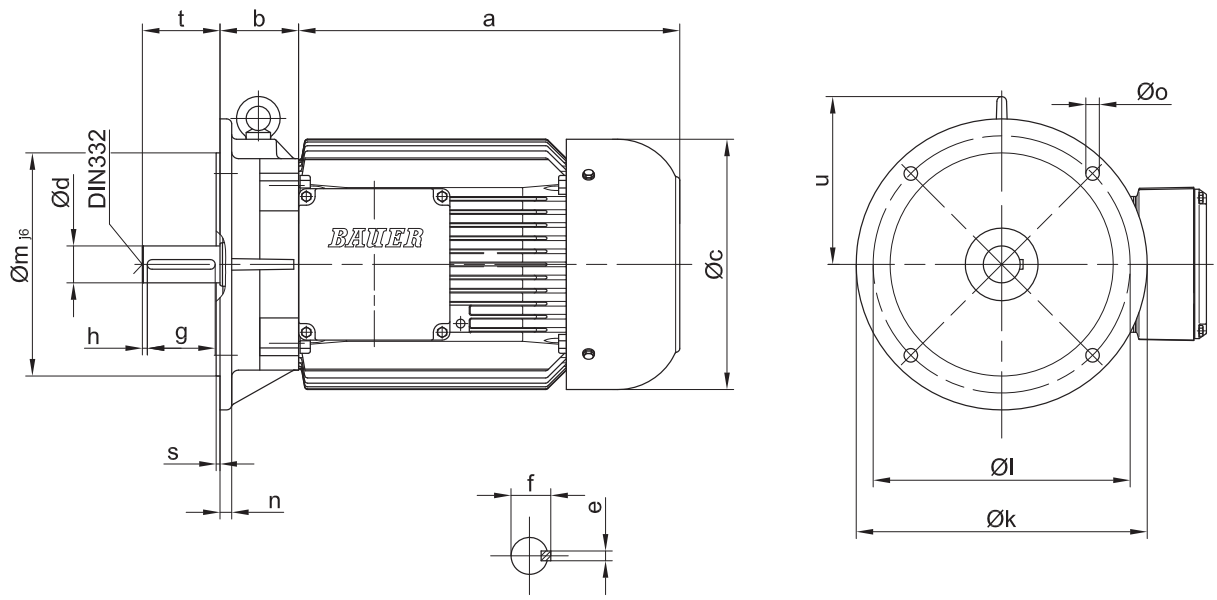

Motor	Masse (mm)																Zentrierung
	a	b	c	d	e	f	g	h	k	l	m	n	o	s	t	u	DIN 332
D06	170	45	123	11_{j6}	4	12.5	18	2.5	140	115	95	9	10	2.75	23	-	D4
D07	190	45	123	11_{j6}	4	12.5	18	2.5	140	115	95	9	10	2.75	23	-	D4
D..08	200	49	156	19_{j6}	6	21.5	35	2.5	200	165	130	10	12	3.5	40	-	D4
D..09	251	66	176	24_{j6}	8	27	40	5	200	165	130	10	12	3.5	50	128.5	D6
D..11	319	75	218	28_{j6}	8	31	50	5	250	215	180	11	14.5	4	60	145.5	D8
D..13	393	81	266	38_{k6}	10	41	70	5	300	265	230	12	14	4	80	173	D12
D..16	429	98.5	310	42_{k6}	12	45	90	10	350	300	250	13	18.5	5	110	215.5	D16

The actual gearbox design can vary from the geometry shown.

Motors in IEC-design

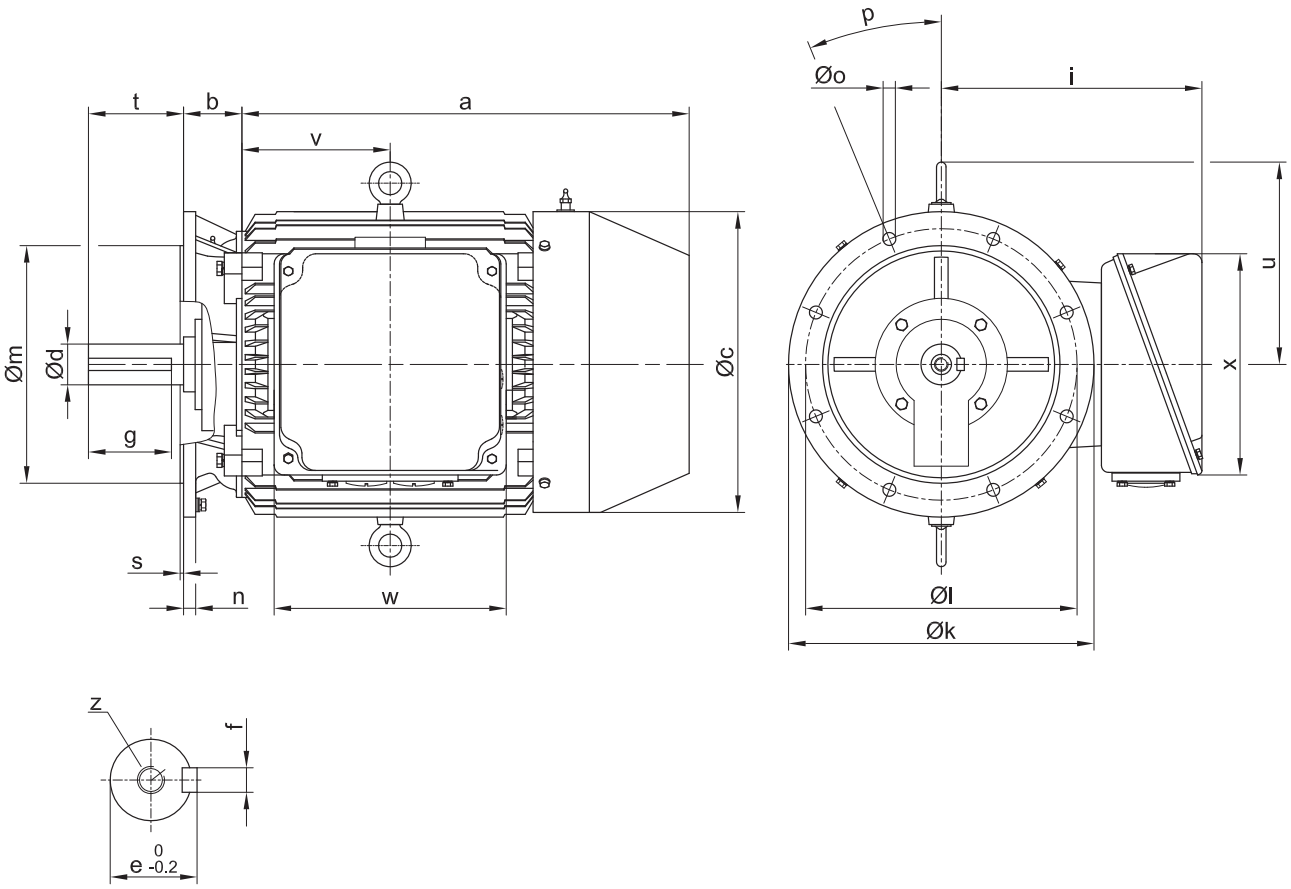

Motor	Masse (mm)																
	a	b	c	d	e	f	g	i	k	l	m	n	o	p	s	t	u
DNF18	551	79	355	$48^{+0.018}_{+0.002}$	14	51.5	80	293	350	300	250	16	Ø19	4x45°	5	110	240
DNF20	613	82	395	$55^{+0.030}_{+0.011}$	16	59	91	313	400	350	300	16	Ø19	4x45°	5	110	270
DNF22	659	86	442	$60^{+0.030}_{+0.011}$	18	64	122	390	450	400	350	18	Ø19	8x22.5°	5	140	300
DNF25	730	95	485	$65^{+0.030}_{+0.011}$	18	69	126	415	550	500	450	18	Ø19	8x22.5°	5	140	330
DNF28	797	98	544	$75^{+0.030}_{+0.011}$	20	79.5	124	445	550	500	450	18	Ø19	8x22.5°	5	140	380

Motor				Zentrierbohrung	Gewicht
	v	w	x	z	kg
DNF18	194	200	221	M16x2x24	215
DNF20	203.5	200	221	M20x2.5x30	293
DNF22	218.5	342	326	M20x2.5x30	395
DNF25	247.5	342	326	M20x2.5x30	487
DNF28	276	342	326	M20x2.5x30	692

The actual gearbox design can vary from the geometry shown.

18

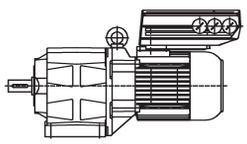

	Page
Drive solutions for decentral and central Drive technology	**769-784**

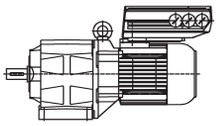

FCD 300

All Bauer gear motors from 0,37 to 3,0kW are available with an externally mounted FCD frequency inverter. The frequency inverters in the range FCD300 are mounted directly to the motor in place of the terminal box. The inverters can alternatively be installed in the vicinity of the motor.



.

Features of FCD geared motors

Flexible assembly
- The FCD300 can be either mounted on the Bauer gear motor or in the vicinity

Simple cabling
- Through spring connectors and a large installation area in the installation box Cable entries 3 X M25, 2 X M20, 2 X M16
- Maximum cable cross section: Control contacts: 2,5 mm^2, Power contacts 4 mm^2, PE: 10 mm^2
- The installation box can be used as T-connecter for the power and bus system connections
- Plug connections are available on request (e.g. Harting Connector)

Integrated Brake Control
- The gear motor brake is controlled directly from the FCD
- Brakes can be supplied from the FCD

Robust Housing
- Enclosure IP66
- Easy to clean
- Protected against aggressive environments

Advanced Bus Communication
- With Profibus DP (3 or 12 MB), AS(i) or DeviceNet
- The unit can be parameterised parallel to the standard cycle bus communication by means of the 2nd bus connection RS 485

Clearly visible status information by means of LED
- Bus
- Status
- Alarm
- Warning
- On

Integrated mains filter
- The unit contains filters for Class 1A (Industry) and mains return as standard

Technical Data for FCD 300

Power range:
0,37-3 kW (3-phase)

Voltage range:
380-480 V

Advantages
- Adaptation to gear motors, standard motors or assembly in the vicinity of the motor
- Enclosure IP66
- High resistance against aggressive environments
- Profibus option
- integrated EMV filter (EN 55011, 1A)
- Convection cooling, no ventilation needed
- Automatic motor adjustment
- Simple operation through separate clear text display

Allocation of FCD300 to motor

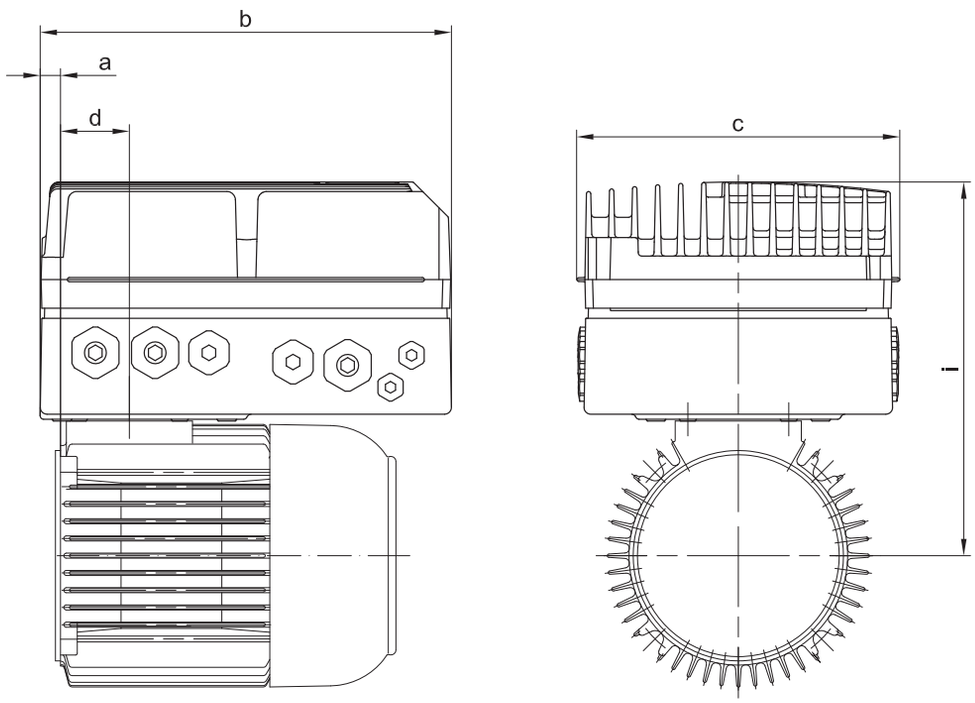

Motor	Typ FCD		Masse (mm)					Kabeleinführung	
			a	b	c	d	i	rechts	beidseitig
D..08	D303 D307 D315	D305 D311	13	244.5	192	40.5	222	2 x M16x1.5 2 x M20x1.5 3 x M25x1.5	4x M16x1.5 4 x M20x1.5 6 x M25x1.5
D..09	D303 D307 D315	D305 D311	0	244.5	192	62	240.5	2 x M16x1.5 2 x M20x1.5 3 x M25x1.5	4 x M16x1.5 4 x M20x1.5 6 x M25x1.5
D..11	D322	D330	0.5	302	258	62	266	2 x M16x1.5 2 x M20x1.5 3 x M25x1.5	4 x M16x1.5 5 x M20x1.5 6 x M25x1.5

Eta geared motors

All Bauer geared motors from 0,12 to 7,5 kW are available with an externally mounted Eta-K frequency inverter. These are mounted directly onto the motor in place of a terminal box. The installation volume required for the geared motor is not much greater than that required for standard geared motors.

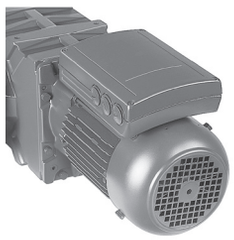

Features of Eta geared motors

The combination of geared motor and converter opens up a whole range of attractive possibilities:

Reduce costs - Save space
- Planning and installation costs are down
- Less space needed for switchgear
- Fewer drive versions, so stock holding is streamlined
- Thermal situation inside the switchgear cabinet is better
- Fewer shielded motor cables

Think system - Avoid interfaces
- Converter and motor are integrated in a single, compact unit
- Converter is optimised ex-works for motor and application
- Retrofits available for existing drive configurations
- Cabling is simplified

Replace standards - Boost functionality
- Substitute the convenience of remote operation for mechanical actuation
- Replacement for pole-changing motors with defined ramp functions

Design features
- Compact, slimline geometry
- Plug-fit to motor
- Maintenance-friendly, accessible and easily replaced
- Complete unit, requires no external control voltage

User benefits
- Preconfigured, plug and play on application-specific basis
- Slip compensation for load-independent constant speed
- PID controller for structuring process control
- Switching frequency adjusts automatically to temperature

Technical Data for Eta-K

- Motor power range 0,12 to 7,5 kW
- Supply voltage 3 x 380 .. 480 V +/- 10%
- Frequency 50/60 Hz
- Speed range 1 : 50
- 160 % of rated motor torque over the entire frequency-converter range
- Flux braking
- Integrated Profibus interface instead of standard controller card available on request
- CE mark
- Compliant with EMC Directive for Industry and Households as per EN 61800-3 (EN 50081, EN 50082)
- Design compliant with UL requirements
- Degree of protection IP 65: motor and converter
- Integrated protection against overload, overcurrent, phase failure, overvoltage and undervoltage
- Drive is thermally monitored

Classification, Eta-K to motor

Motor power	Type of motor	Type of inverter 400 V / 50 Hz	Type of inverter 400 V / 87 Hz
0,12	D06LA4	K305	K305
0,18	D06LA4	K305	K305
0,25	D06LA4	K305	K305
0,37	D08MA4	K305	K307
0,55	D08MA4	K305	K311
0,75	D08LA4	K307	K315
1,1	D09SA4	K311	K322
1,5	D09LA4	K315	K330
1,8	D09XA4	K322	K340
2,2 *	D09XA4-FV	K322	K340
2,2	D11SA4	K322	K340
3,0	D11MA4	K330	K355
4,0	D11LA4	K340	K375
5,5	D13LA4	K355	-
7,5	D16MA4	K375	-

* = Motor design only with Forced Cooling (FV) permissible

Dimensional drawing, motors with externally mounted Eta-K inverter

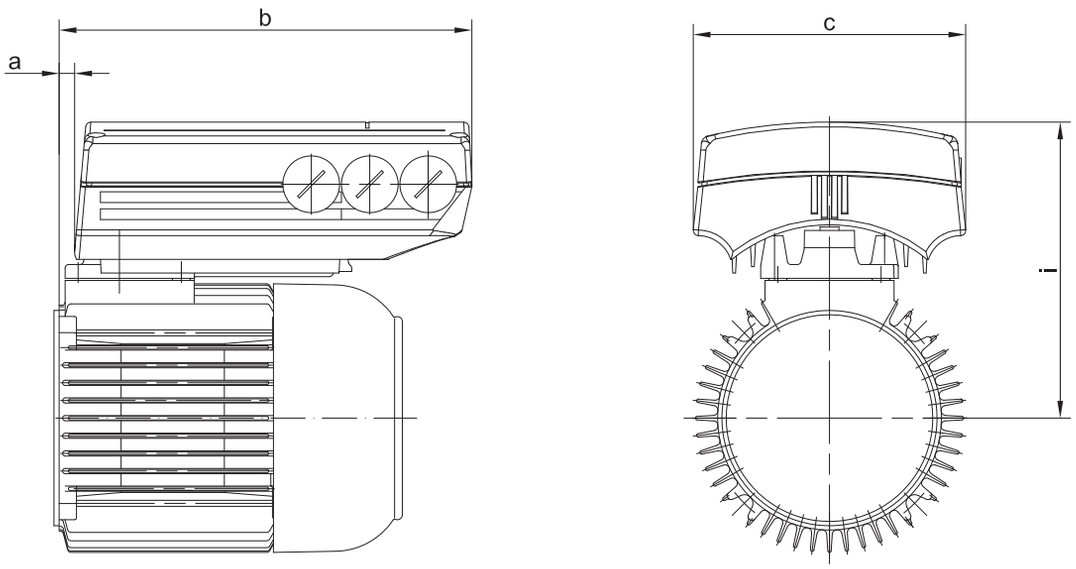

Motor	Typ Eta-K...		Masse (mm)				Kabeleinführung
			a	b	c	i	
D06	K305		12	218	141	148	3xM20x1.5
D..08	K305	K307	8	214	141	166	3xM20x1.5
	K311	K315	9	240	158	174	3xM20x1.5
D..09	K311	K315	5	236	158	202	3xM20x1.5
	K322	K330	2	259	176	212	3xM20x1.5
	K340		1	289	197	228	2xM20x1.5;1xM25x1.5
D..11	K322	K330	3	260	176	223	3xM20x1.5
	K340		2	290	197	245	2xM20x1.5;1xM25x1.5
	K355	K375	4	363	245	257	2xM20x1.5;1xM25x1.5
D..13	K355		7	366	245	278	2xM20x1.5;1xM25x1.5
D..16	K375		8	367	245	304	2xM20x1.5;1xM25x1.5

Dimensional drawing, Eta-K converter with brake control

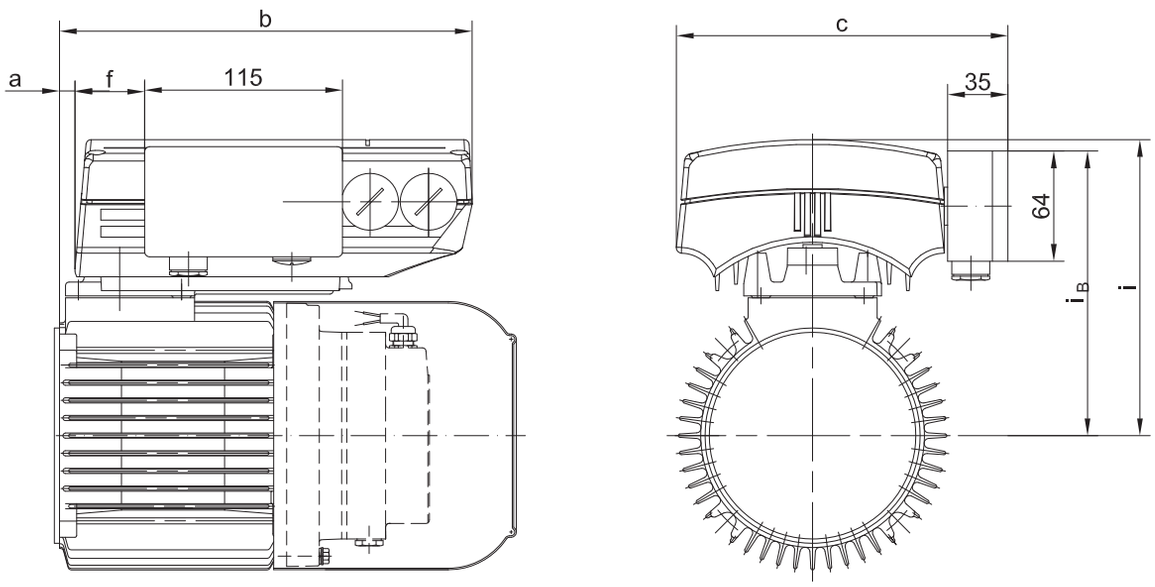

Motor	Typ Eta-K...		Masse (mm)						Kabeleinführung
			a	b	c	f	i	i_B	
D06	K305		12	218	180.5	17	148	157	2xM20x1.5
D08	K305	K307	8	214	180.5	17	166	172	2xM20x1.5
	K311	K315	9	240	198	40	175	170	2xM20x1.5
D09	K311	K315	5	236	198	40	202	197	2xM20x1.5
	K322	K330	2	259	215	65	212	210	2xM20x1.5
	K340		1	289	236	82	228	218	1xM20x1.5; 1xM25x1.5
D11	K322	K330	3	260	215	65	223	223	1xM20x1.5
	K340		2	290	236	82	245	235	1xM20x1.5; 1xM25x1.5

Accessories

Operating panel with keyboard (LCP2) for setting parameters

This IP 65 control panel has a 4-line plain-text display for easy operation and parameterisation. All parameters can be stored in the control panel for straightforward transfer to other converters. The control panel connects to the RS 485 serial interface. 2 connecting-cable sets are available:

- Connecting cable from LCP to the terminal strip of the converter
- Connecting cable for LCP with plug connector and adapter to terminal strip with plug socket for installation in PG16 hole. A kit complete with connecting cable for installing the control panel in a master panel is also available.

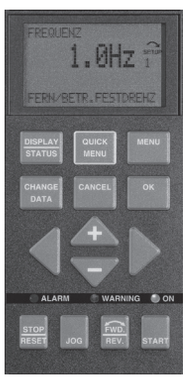

Local operator panel (LOP)

A LOP with connecting cable can be used for setting speed locally and for starting and stopping the drive. The LOP can be used to control the following functions via the converter's programmable inputs/outputs: Start clockwise, start counter-clockwise, stop, acknowledge, increase speed, decrease speed.

Setpoint potentiometer

A setpoint potentiometer for installation in a cable entry gland of the converter housing is available for adjusting speed directly at the drive. Resistance 1 kohm, angle of rotation 270°, protection IP52. This potentiometer is particularly suitable as an alternative to mechanical actuating drives.



Parameterisation software

Using this software it is possible to set parameters, operate and control all frequency inverters by means of a PC. This contributes significantly to simplifying parameterisation, initial operation, diagnosis and documentation of the systems. It is possible to network up to 126 inverters. Downtimes for device replacement are cut dramatically using a configuration of this nature.

- Basic module for convenient parameterisation and testing.
- Log module with monitor functionality for commissioning complex systems; modem-based communication is possible.
- Compilation module for compiling input and output forms with password protection.

Supply for mechanical brake

A mechanical brake for the motor can be actuated directly by the frequency converter. Connection is by means of an additional terminal box on the frequency converter. Two output relays are also available for the signals "Eta-K ready" and "Brake fault".

Connection diagrams

Power section

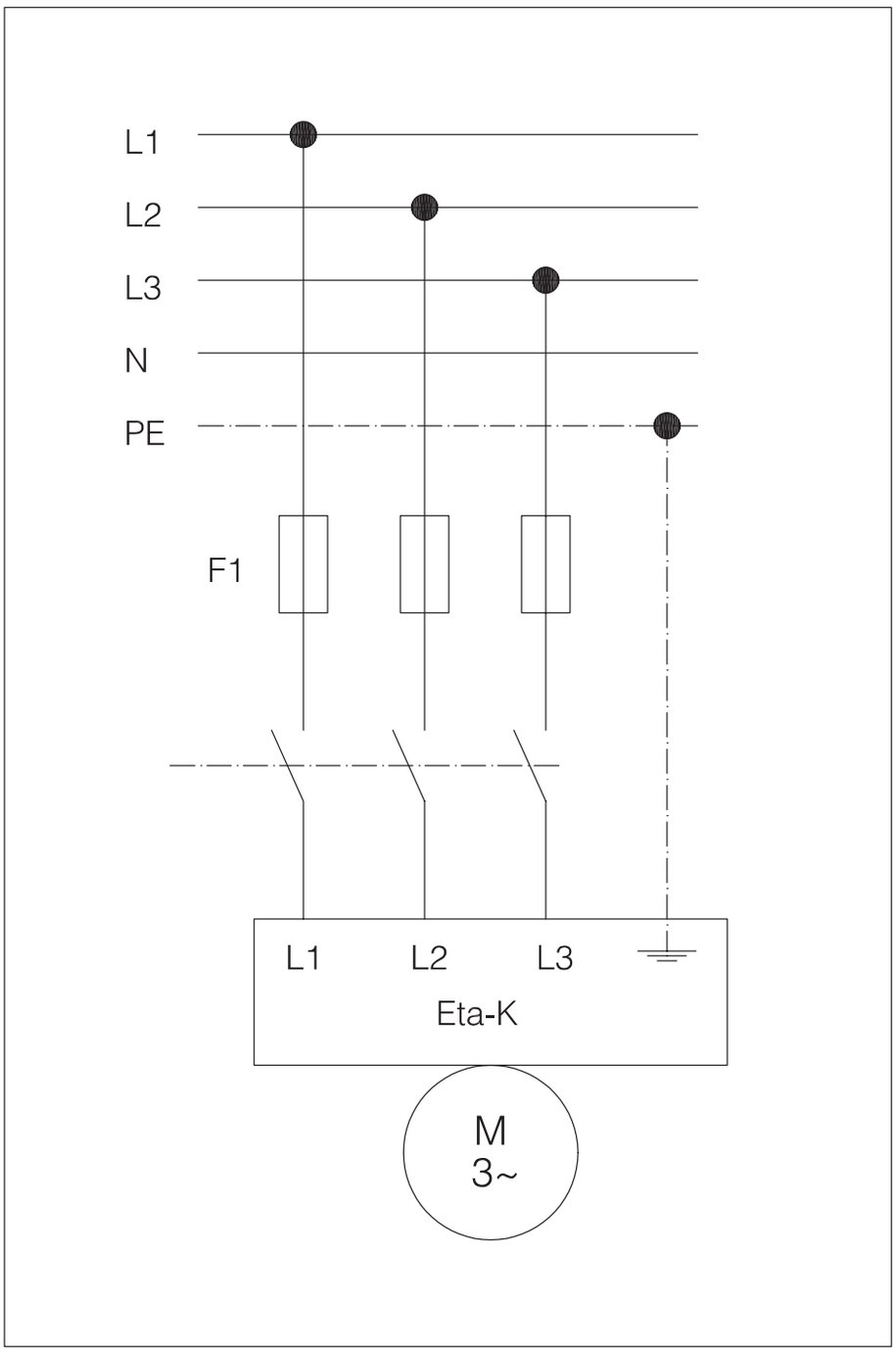

Control section

Standard

Two directions of rotation with analog setpoint

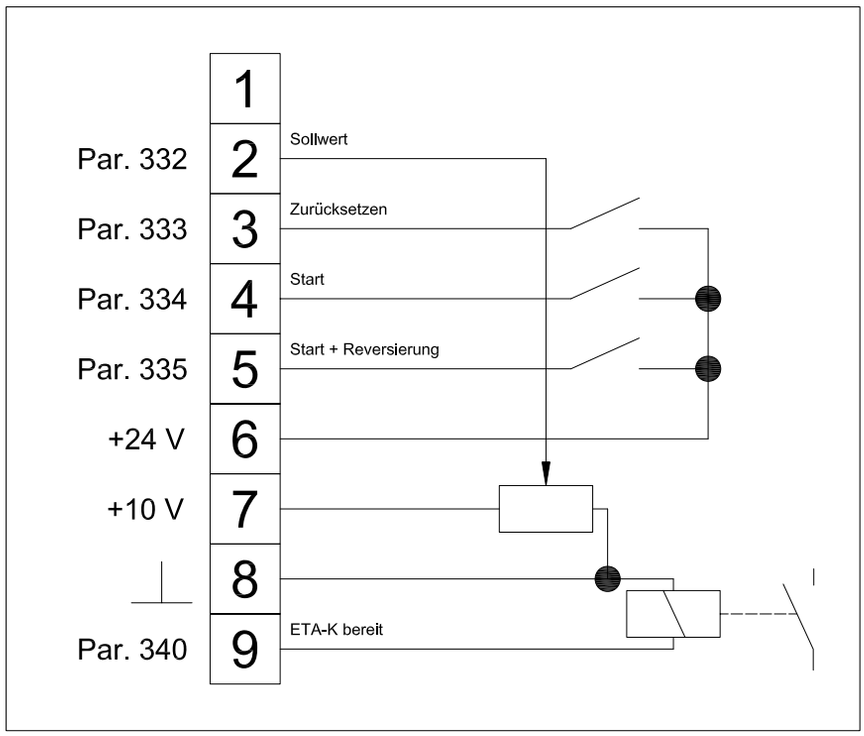

One direction of rotation with analog setpoint

e. g. as a substitute for actuator geared motors.

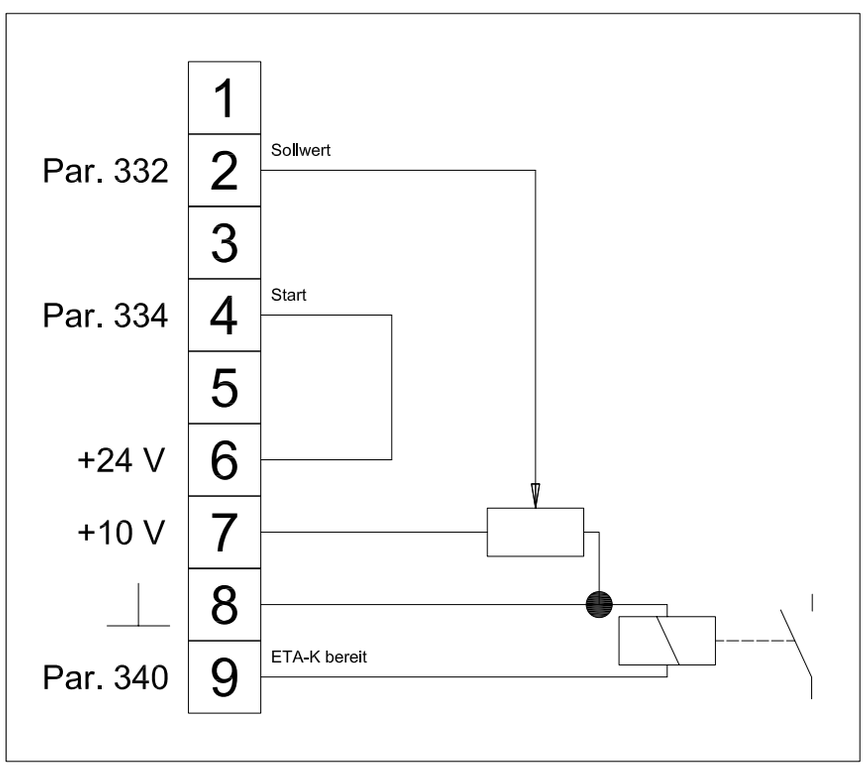

2 speeds + 2 directions of rotation

e. g. as a substitute for pole-changing drives

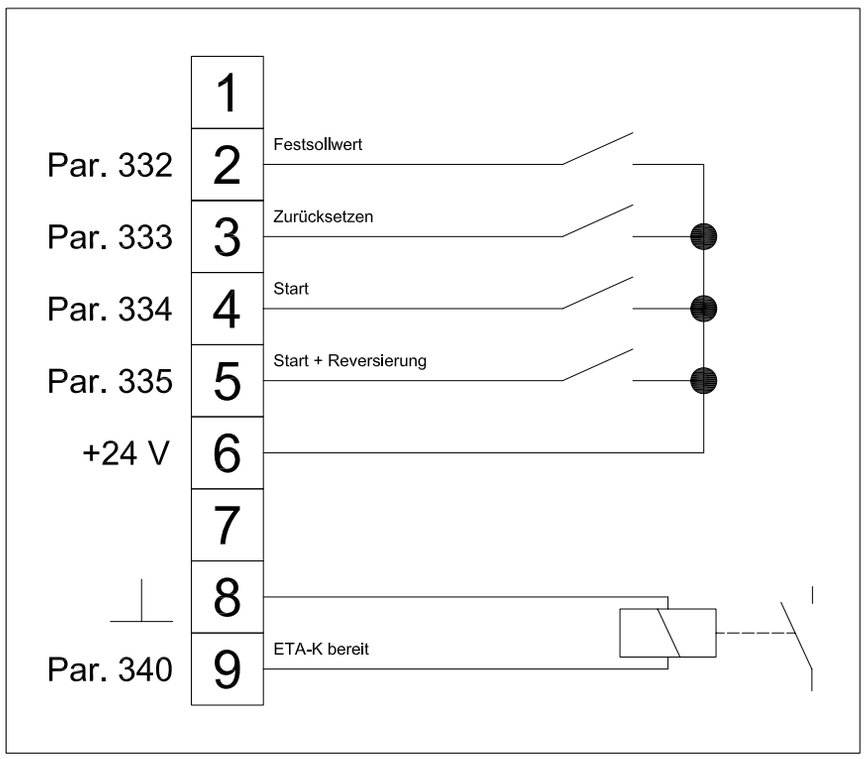

Possible assemblies for FCD and Eta-K

BG-series

Terminal box position	B3 H4	B6 H1	B7 H2	B8 H3	V5 H5	V6 H6	B5	V1	V3
I	+	o	+	+	+	+	+	+	+
II	+	+	+	o	+	+	+	+	+
III	+	+	o	+	+	+	+	+	+
IV	o	+	+	+	+	+	o	+	+

+ posible, o not possible

BF-series

Terminal box position	H1	H2	H3	H4	V1	V2			
I	o	+	+	+	+	+			
II	+	+	o	+	+	+			
III	+	o	+	+	+	+			
IV	+	+	+	o	+	+			

+ posible, o not possible

BK-series

Terminal box position	H1	H2	H3	H4	V1	V2			
I	+	+	+	+	o	+			
II	+	o	+	+	+	+			
III	+	+	+	+	+	o			
IV	o	+	+	+	+	+			

+ posible, o not possible

BS-series

Terminal box position	H1	H2	H3	H4	V1	V2			
I	+	+	+	+	o	+			
II	+	o	+	+	+	+			
III	+	+	+	+	+	o			
IV	o	+	+	+	+	+			

+ posible, o not possible

BS-series

Terminal box position	H1	H2	H3	H4	V1	V2			
I	+	+	+	+	o	+			
II	+	o	+	+	+	+			
III	+	+	+	+	+	o			
IV	o	+	+	+	+	+			

+ posible, o not possible

VLT® Micro Drive

Microdrive for standard product applications



Technical data for VLT® Micro Drive

Power range:
0.37–7.5 kW (380–480 V, 3 phase)
0.18–2.2 kW (200–240 V, 1 phase)
0.25–3.7 kW (200–240 V, 3 phase)

Protection:
IP 20 / IP 21

Advantages
- Approx. 40% smaller than comparable drives
- Integrated EMC filter
- Protective housing
- Removable control unit with copy function
- Control unit with setpoint potentiometer (option)
- RS485 port as standard
- Extremely easy commissioning (preconfigured)

VLT® 2800 Series

General-purpose converter for small and medium power levels



Technical data for VLT® 2800 Series

Power range:
0.55–18.5 kW (380–480 V, 3 phase)
0.37–1.5 kW (200–240 V, 1 phase)
0.37–3.7 kW (200–240 V, 3 phase)

Protection:
IP 20

Advantages
- Integrated EMC filter and RFI choke
- Robust cold-plate heatsink
- Suitable for side-by-side or horizontal mounting
- Large integrated control panel
- RS 485 port as standard
- Optional Profibus DPV1 interface

VLT® AutomationDrive

Modular drive platform with full power spectrum



Technical data for VLT® AutomationDrive

Power range:
0.37–800 kW (380–500 V, 3 phase)
0.25–37 kW (200–240 V, 3 phase)

Protection:
IP 20 / IP 21, IP 55, IP 66

Advantages
- A single drive platform for all main and auxiliary drives
- Modular design for optimal matching to the application
- Safety features: Basic unit with STO/SIL 2
- Integrated EMC filter and RFI choke
- Plain-text control unit with online help and copy function (optional)
- RS485 and USB interfaces as standard
- Motor cable lengths up to 150 m screened without extra fittings
- Mechanical braking/lifting function
- "Smart Logic" simplifies logic tasks
- Optional fieldbus interfaces (Profibus, Profinet, Ethernet/IP, Powerlink, Interbus, Safetybus-p)

MCT 10 Software

Project-oriented PC software for all VLT® series drive systems



Description of MCT 10 software

Supported VLT series:
Eta-K
VLT® FCD 300
VLT® Micro Drive
VLT® 2800 series
VLT® 5000 series
VLT® Automation Drive

Advantages
- Easy project management overview, even with extensive system data
- A single software tool for all VLT® drives
- Online processing for commissioning
- Oscilloscope function
- Supports RS485, USB and Profibus DP-V1 interfaces
- Operational basic version free of charge

Download:
www.danfoss.de/drives (Software)

MCD soft starters

MCD 100/MCD 200 soft-start equipment for gentle handling of mechanical transfer components



Technical data for MCD100 / MCD 200 Softstarters

Power range:
MCD 100: 1.1–11 kW (200–600 V)
MCD 200: 7.5–110 kW (200–575 V)

Protection:
IP 20 / IP 21

MCD 100 advantages
- Minimal space requirement
- Rail mounting
- Extremely easy to use

MCD 200 advantages
- Motor protection features
- External control unit (optional)
- Fieldbus interfaces (optional)

Additional information

Detailed information on VLT® frequency converters and MCD soft starters is available online at

www.danfoss.de/drives

We would also be pleased to send you additional engineering documentation on these products.

19



Page

Adress 785-792

INTERNATIONAL
CENTRAL
NORTH WEST
SOUTH
MEA (Middle East, Africa)
NORTH AMERICA
LATIN AMERICA
RUSSIA
ASIA PACIFIC

BAUER global

International

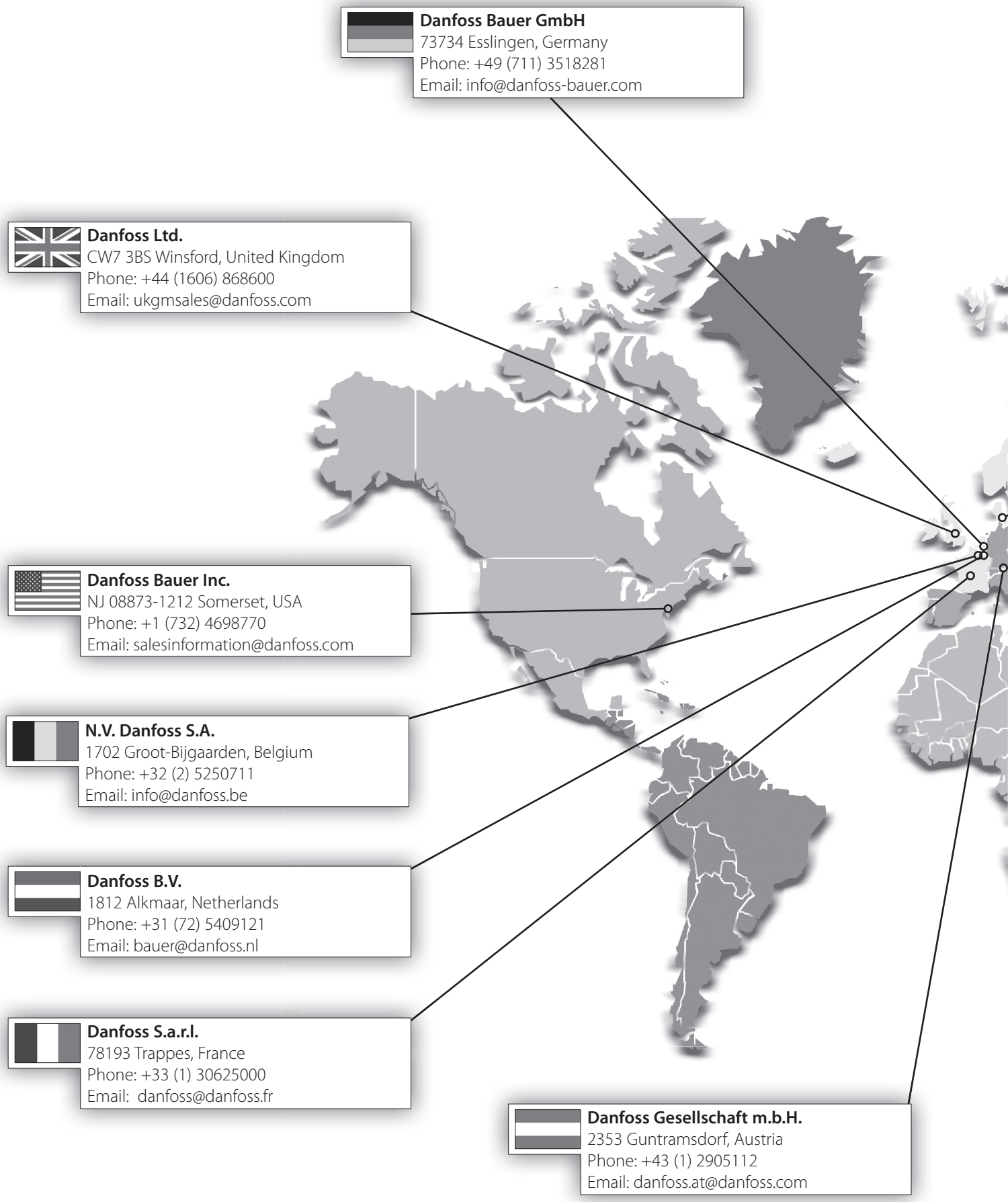

Danfoss Bauer GmbH
73734 Esslingen, Germany
Phone: +49 (711) 3518281
Email: info@danfoss-bauer.com

Danfoss Ltd.
CW7 3BS Winsford, United Kingdom
Phone: +44 (1606) 868600
Email: ukgmsales@danfoss.com

Danfoss Bauer Inc.
NJ 08873-1212 Somerset, USA
Phone: +1 (732) 4698770
Email: salesinformation@danfoss.com

N.V. Danfoss S.A.
1702 Groot-Bijgaarden, Belgium
Phone: +32 (2) 5250711
Email: info@danfoss.be

Danfoss B.V.
1812 Alkmaar, Netherlands
Phone: +31 (72) 5409121
Email: bauer@danfoss.nl

Danfoss S.a.r.l.
78193 Trappes, France
Phone: +33 (1) 30625000
Email: danfoss@danfoss.fr

Danfoss Gesellschaft m.b.H.
2353 Guntramsdorf, Austria
Phone: +43 (1) 2905112
Email: danfoss.at@danfoss.com

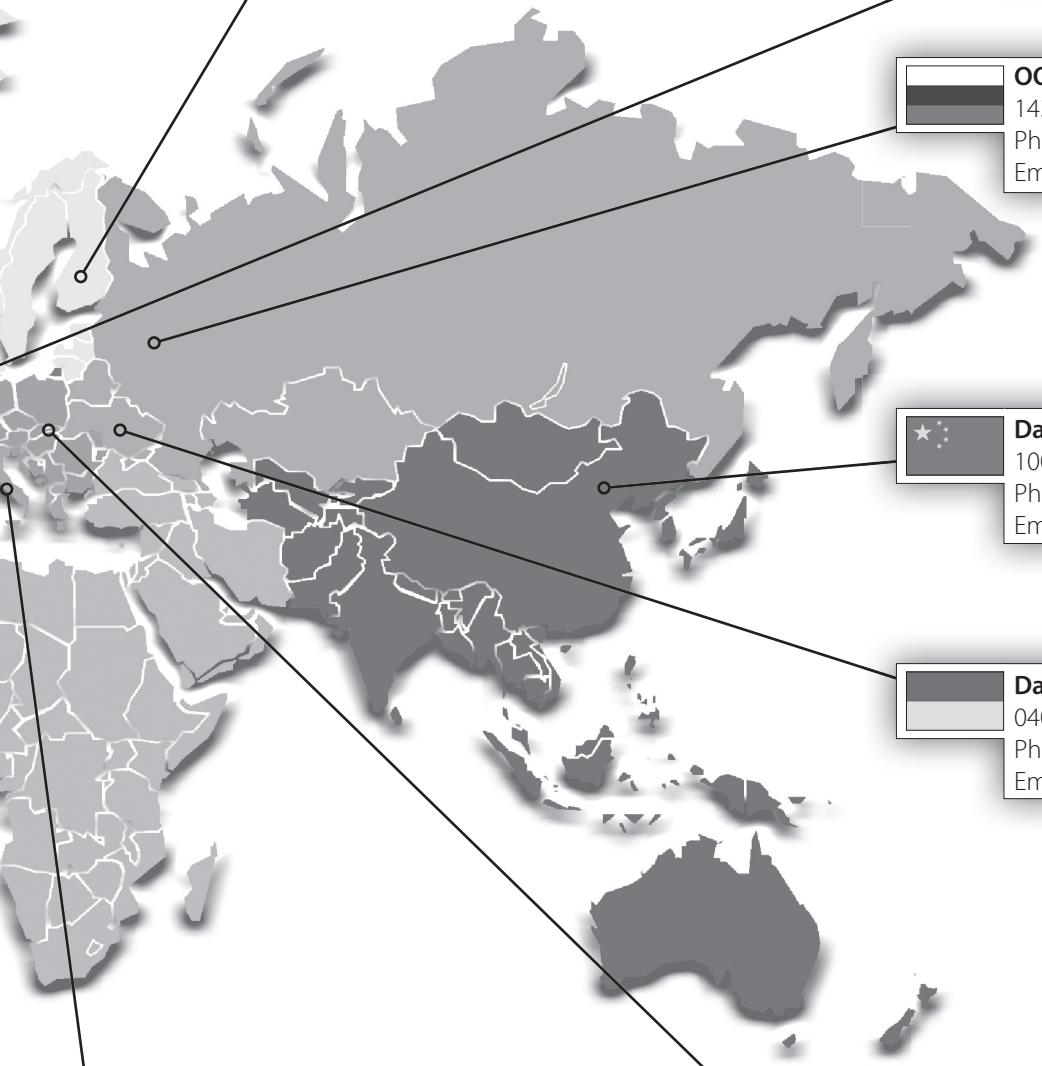

Oy Danfoss AB
1800 Klaukkala, Finland
Phone: +35 (9) 47647000
Email: bauer.finland@danfoss.fi

Danfoss A/S
8361 Hasselager, Denmark
Phone: +45 (89) 489111
Email: dksc@danfoss.dk

OOO Danfoss
143581 Moscow, Russian Federation
Phone: +7 (495) 7925757
Email: info@danfoss.ru

Danfoss China
100026 Beijing, China
Phone: +86 (13) 601059097 / 501199773
Email: beijing@danfoss.com.cn

Danfoss T.O.V.
04080 Kiev 080, Ukraine
Phone: +38 (50) 3129875
Email: ua_postmaster@danfoss.com

Danfoss s.r.o.
14800 Praha 4, Czech Republic
Phone: +42 (2) 83014111
Email: danfoss.cz@danfoss.com

Danfoss s.r.l.
36040 Grisignano di Zocco, Italy
Phone: +39 (0444) 414392
Email: info@danfoss.it

BAUER global

CENTRAL

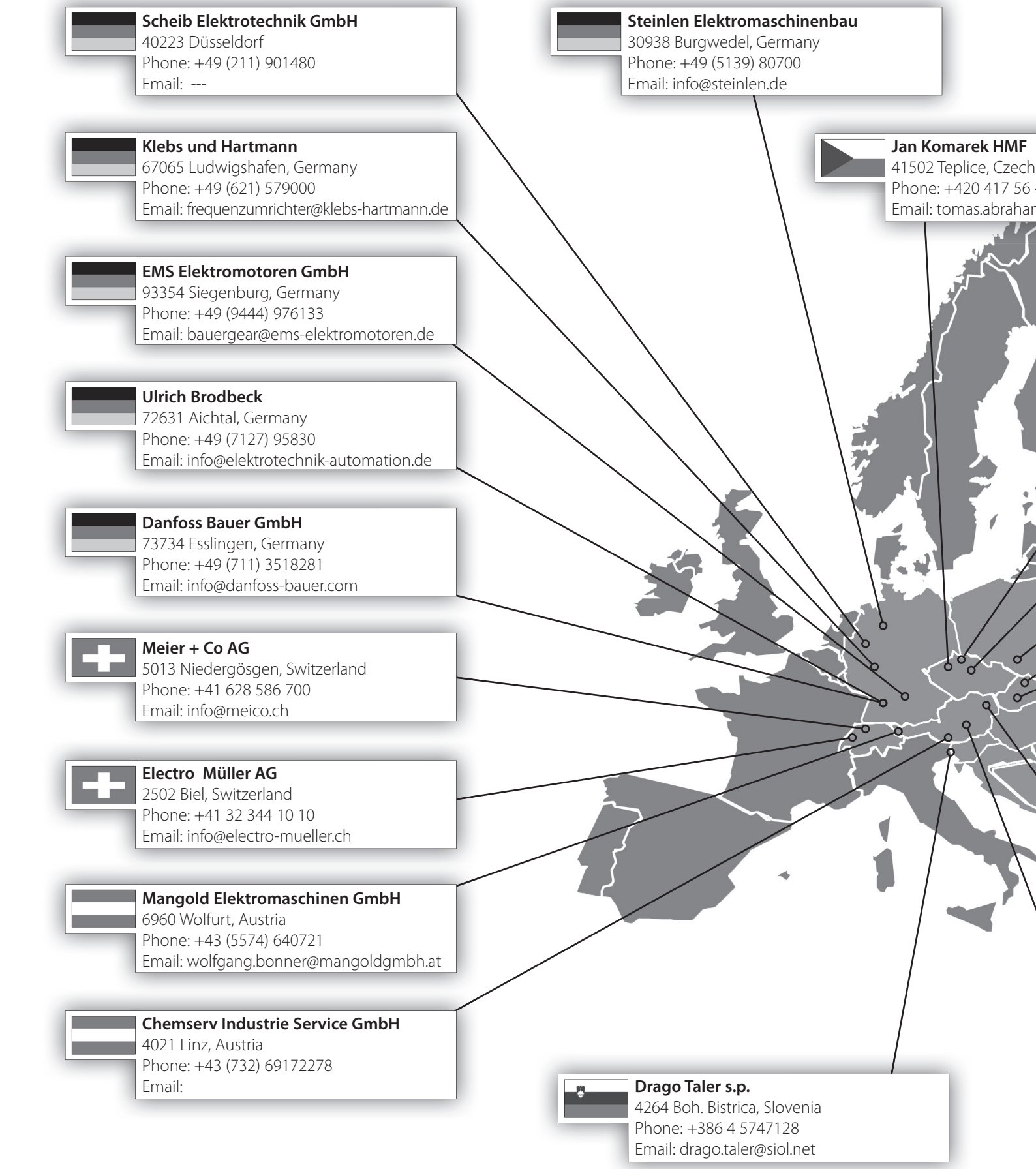

Scheib Elektrotechnik GmbH
40223 Düsseldorf
Phone: +49 (211) 901480
Email: ---

Steinlen Elektromaschinenbau
30938 Burgwedel, Germany
Phone: +49 (5139) 80700
Email: info@steinlen.de

Klebs und Hartmann
67065 Ludwigshafen, Germany
Phone: +49 (621) 579000
Email: frequenzumrichter@klebs-hartmann.de

Jan Komarek HMF
41502 Teplice, Czech
Phone: +420 417 56
Email: tomas.abrahar

EMS Elektromotoren GmbH
93354 Siegenburg, Germany
Phone: +49 (9444) 976133
Email: bauergear@ems-elektromotoren.de

Ulrich Brodbeck
72631 Aichtal, Germany
Phone: +49 (7127) 95830
Email: info@elektrotechnik-automation.de

Danfoss Bauer GmbH
73734 Esslingen, Germany
Phone: +49 (711) 3518281
Email: info@danfoss-bauer.com

Meier + Co AG
5013 Niedergösgen, Switzerland
Phone: +41 628 586 700
Email: info@meico.ch

Electro Müller AG
2502 Biel, Switzerland
Phone: +41 32 344 10 10
Email: info@electro-mueller.ch

Mangold Elektromaschinen GmbH
6960 Wolfurt, Austria
Phone: +43 (5574) 640721
Email: wolfgang.bonner@mangoldgmbh.at

Chemserv Industrie Service GmbH
4021 Linz, Austria
Phone: +43 (732) 69172278
Email:

Drago Taler s.p.
4264 Boh. Bistrica, Slovenia
Phone: +386 4 5747128
Email: drago.taler@siol.net



IHR Technika s.r.o.
29306 Kosmonosy, Czech Republic
Phone: +420 326 72 27 16
Email: info@ihr-tech.cz

Danfoss s.r.o.
14800 Praha 4, Czech Republic
Phone: +420 2 830 14111
Email: danfoss.cz@danfoss.com

Republic
44 56
m@navijama-hmf.cz

Steinlen Service Polska
40203 Katowice, Poland
Phone: +48 32 201 7013
Email: steinlen@katowice.multinet.pl

Transmisie Engineering a.s.
03601 Martin, Slovakia
Phone: +421 43 413 3157
Email: dps@transmisie.sk

Danfoss s.r.o.
95336 Zlate Moravce, Slovakia
Phone: +421 37 640 6294
Email: danfoss.sk@danfoss.com

Schorch Hungary Ltd.
3580 Tiszaujvaros, Hungary
Phone: +36 49 440 877
Email: info@schorchhungaria.hu

Indas Industry Assistance d.o.o.
21000 Novi Sad, Serbia & Montenegro
Phone: +381 21 480 4800
Email: office@indas.rs

NASA-D Ltd.
9002 Varna, Bulgaria
Phone: +359 52 60 5995
Email: varna@nasa-d.com

Danfoss Gesellschaft m.b.H.
2353 Guntramsdorf, Austria
Phone: +43 (1) 2905112
Email: danfoss.at@danfoss.com

NASA-D Ltd.
1715 Sofia, Bulgaria
Phone: +359 2 975 5065
Email: office@nasa-d.com

ESKO Elektromaschinenb au GmbH
8753 Fohnsdorf, Austria
Phone: +43 3573 27570
Email: office@esko.at

BAUER global

NORTH WEST

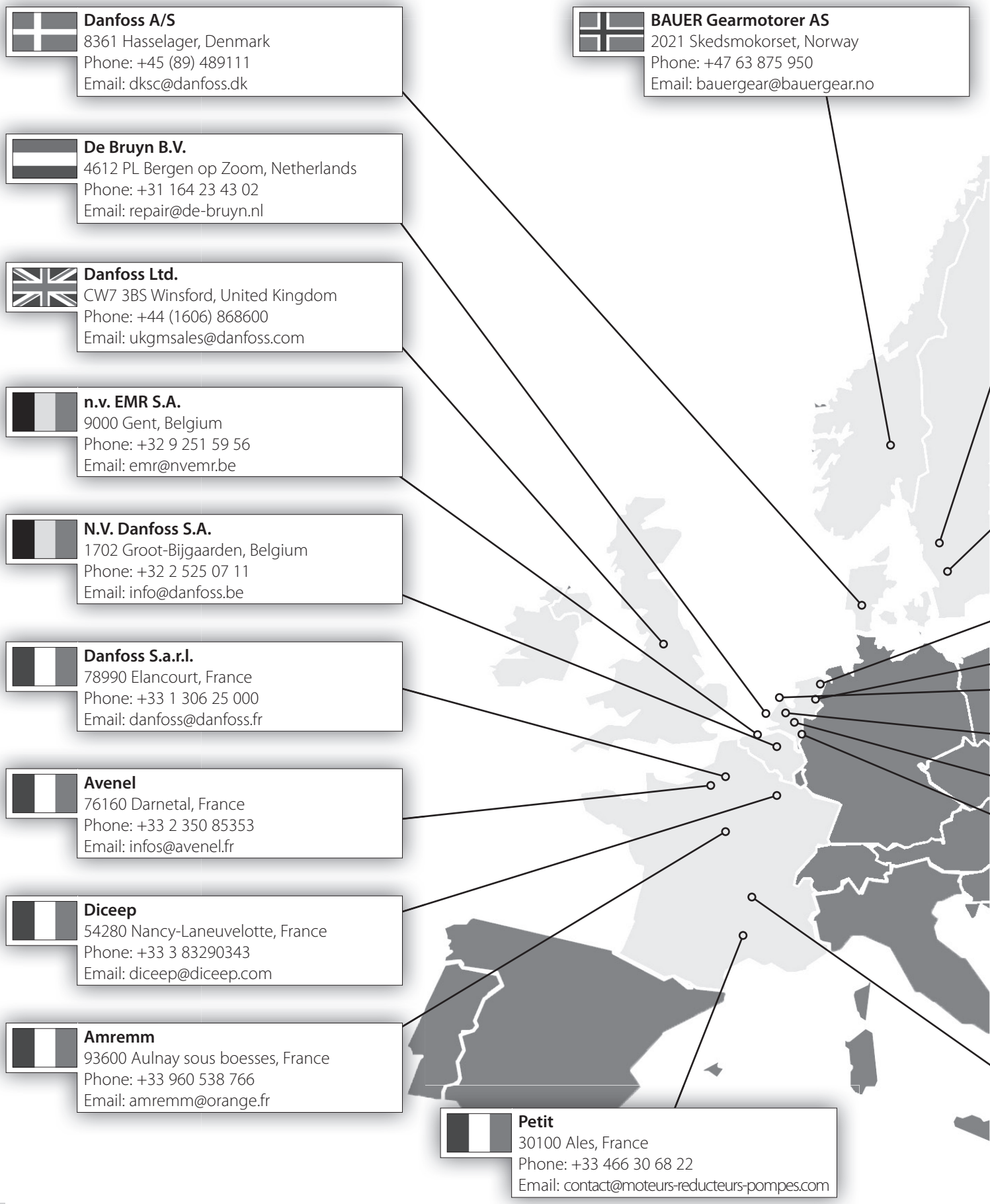

Danfoss A/S
8361 Hasselager, Denmark
Phone: +45 (89) 489111
Email: dksc@danfoss.dk

BAUER Gearmotorer AS
2021 Skedsmokorset, Norway
Phone: +47 63 875 950
Email: bauergear@bauergear.no

De Bruyn B.V.
4612 PL Bergen op Zoom, Netherlands
Phone: +31 164 23 43 02
Email: repair@de-bruyn.nl

Danfoss Ltd.
CW7 3BS Winsford, United Kingdom
Phone: +44 (1606) 868600
Email: ukgmsales@danfoss.com

n.v. EMR S.A.
9000 Gent, Belgium
Phone: +32 9 251 59 56
Email: emr@nvemr.be

N.V. Danfoss S.A.
1702 Groot-Bijgaarden, Belgium
Phone: +32 2 525 07 11
Email: info@danfoss.be

Danfoss S.a.r.l.
78990 Elancourt, France
Phone: +33 1 306 25 000
Email: danfoss@danfoss.fr

Avenel
76160 Darnetal, France
Phone: +33 2 350 85353
Email: infos@avenel.fr

Diceep
54280 Nancy-Laneuvelotte, France
Phone: +33 3 83290343
Email: diceep@diceep.com

Amremm
93600 Aulnay sous boesses, France
Phone: +33 960 538 766
Email: amremm@orange.fr

Petit
30100 Ales, France
Phone: +33 466 30 68 22
Email: contact@moteurs-reducteurs-pompes.com

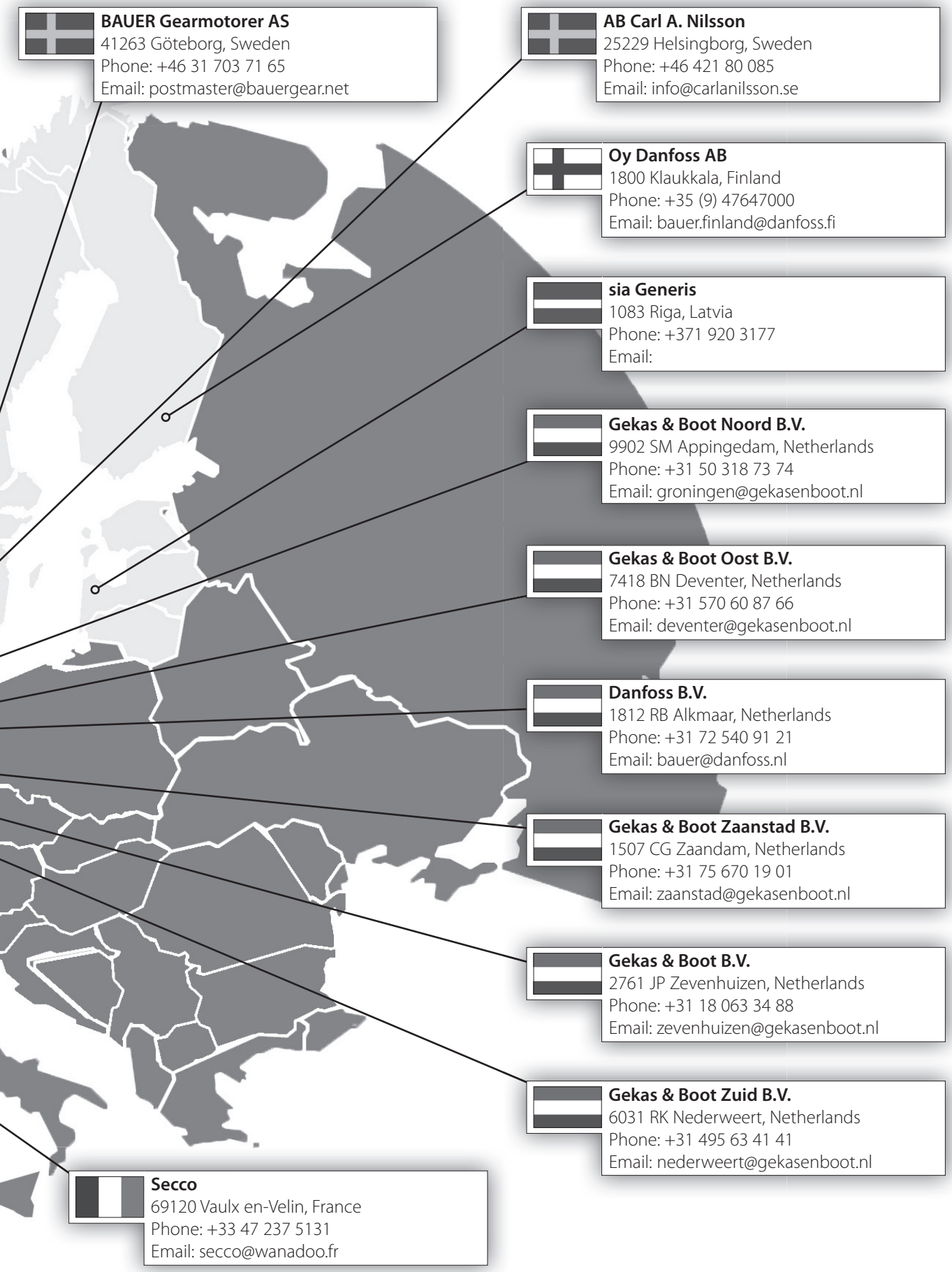

BAUER Gearmotorer AS
41263 Göteborg, Sweden
Phone: +46 31 703 71 65
Email: postmaster@bauergear.net

AB Carl A. Nilsson
25229 Helsingborg, Sweden
Phone: +46 421 80 085
Email: info@carlanilsson.se

Oy Danfoss AB
1800 Klaukkala, Finland
Phone: +35 (9) 47647000
Email: bauer.finland@danfoss.fi

sia Generis
1083 Riga, Latvia
Phone: +371 920 3177
Email:

Gekas & Boot Noord B.V.
9902 SM Appingedam, Netherlands
Phone: +31 50 318 73 74
Email: groningen@gekasenboot.nl

Gekas & Boot Oost B.V.
7418 BN Deventer, Netherlands
Phone: +31 570 60 87 66
Email: deventer@gekasenboot.nl

Danfoss B.V.
1812 RB Alkmaar, Netherlands
Phone: +31 72 540 91 21
Email: bauer@danfoss.nl

Gekas & Boot Zaanstad B.V.
1507 CG Zaandam, Netherlands
Phone: +31 75 670 19 01
Email: zaanstad@gekasenboot.nl

Gekas & Boot B.V.
2761 JP Zevenhuizen, Netherlands
Phone: +31 18 063 34 88
Email: zevenhuizen@gekasenboot.nl

Gekas & Boot Zuid B.V.
6031 RK Nederweert, Netherlands
Phone: +31 495 63 41 41
Email: nederweert@gekasenboot.nl

Secco
69120 Vaulx en-Velin, France
Phone: +33 47 237 5131
Email: secco@wanadoo.fr

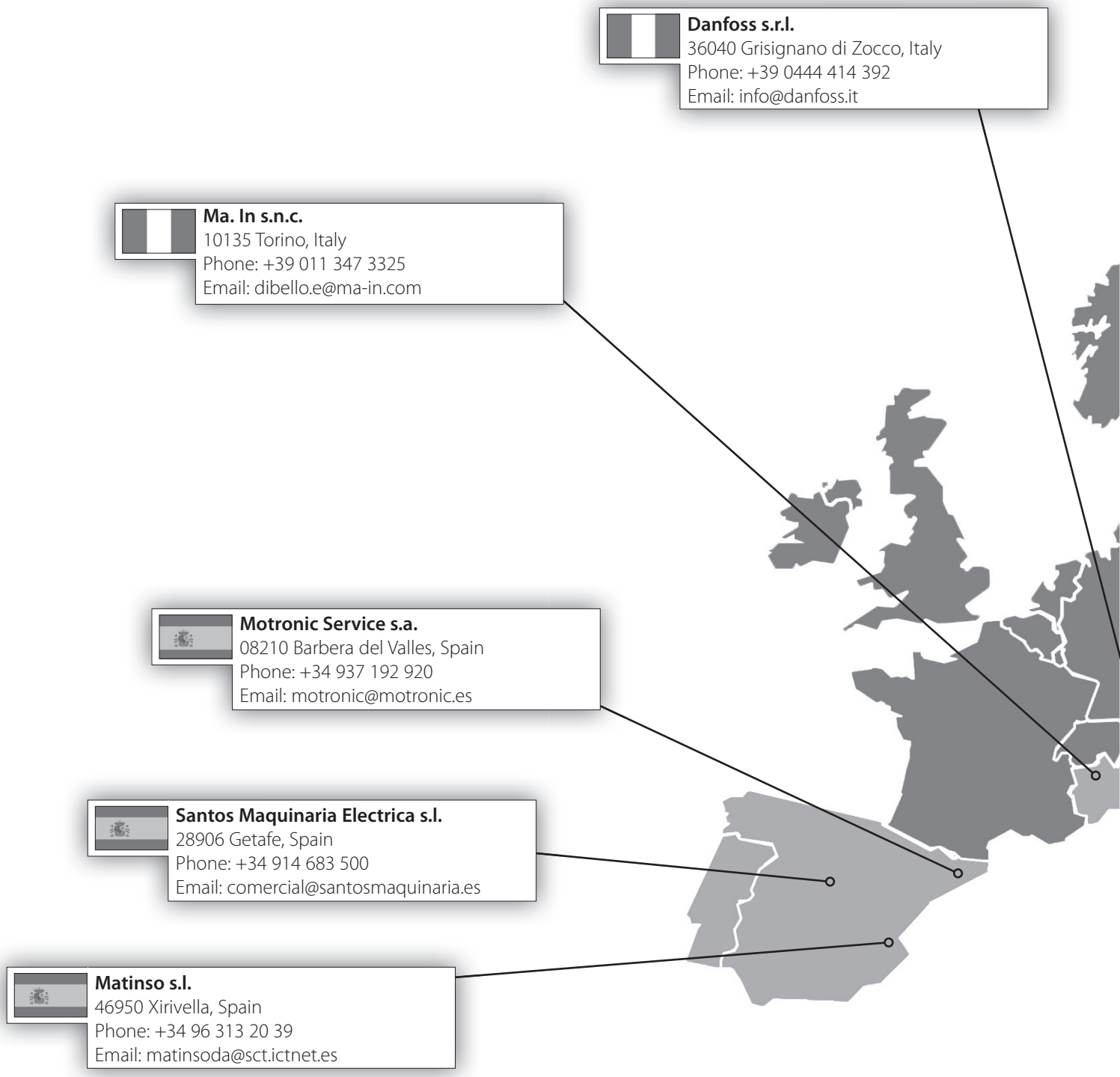

Danfoss s.r.l.
36040 Grisignano di Zocco, Italy
Phone: +39 0444 414 392
Email: info@danfoss.it

Ma. In s.n.c.
10135 Torino, Italy
Phone: +39 011 347 3325
Email: dibello.e@ma-in.com

Motronic Service s.a.
08210 Barbera del Valles, Spain
Phone: +34 937 192 920
Email: motronic@motronic.es

Santos Maquinaria Electrica s.l.
28906 Getafe, Spain
Phone: +34 914 683 500
Email: comercial@santosmaquinaria.es

Matinso s.l.
46950 Xirivella, Spain
Phone: +34 96 313 20 39
Email: matinsoda@sct.ictnet.es



Drivetech e.p.e.
18345 Moschato, Greece
Phone: +30 210 723 3318
Email: info@drivetech.gr

Reima Sud
80021 Afragola, Italy
Phone: +39 081 851 2382
Email: giacomo.mennitto@reimasud.it

BAUER global

MEA (Middle East, Africa)

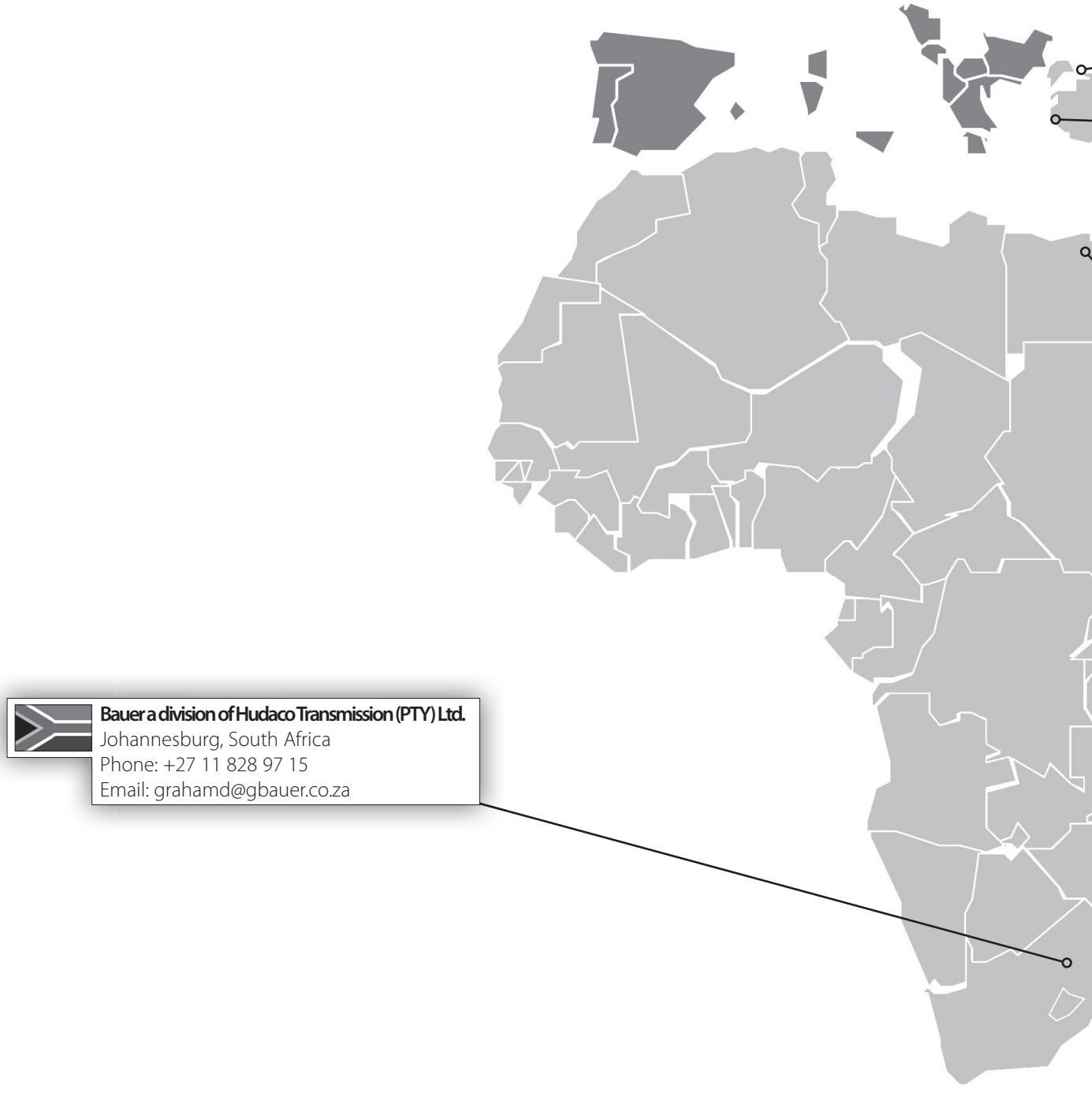

Bauer a division of Hudaco Transmission (PTY) Ltd.
Johannesburg, South Africa
Phone: +27 11 828 97 15
Email: grahamd@gbauer.co.za

19

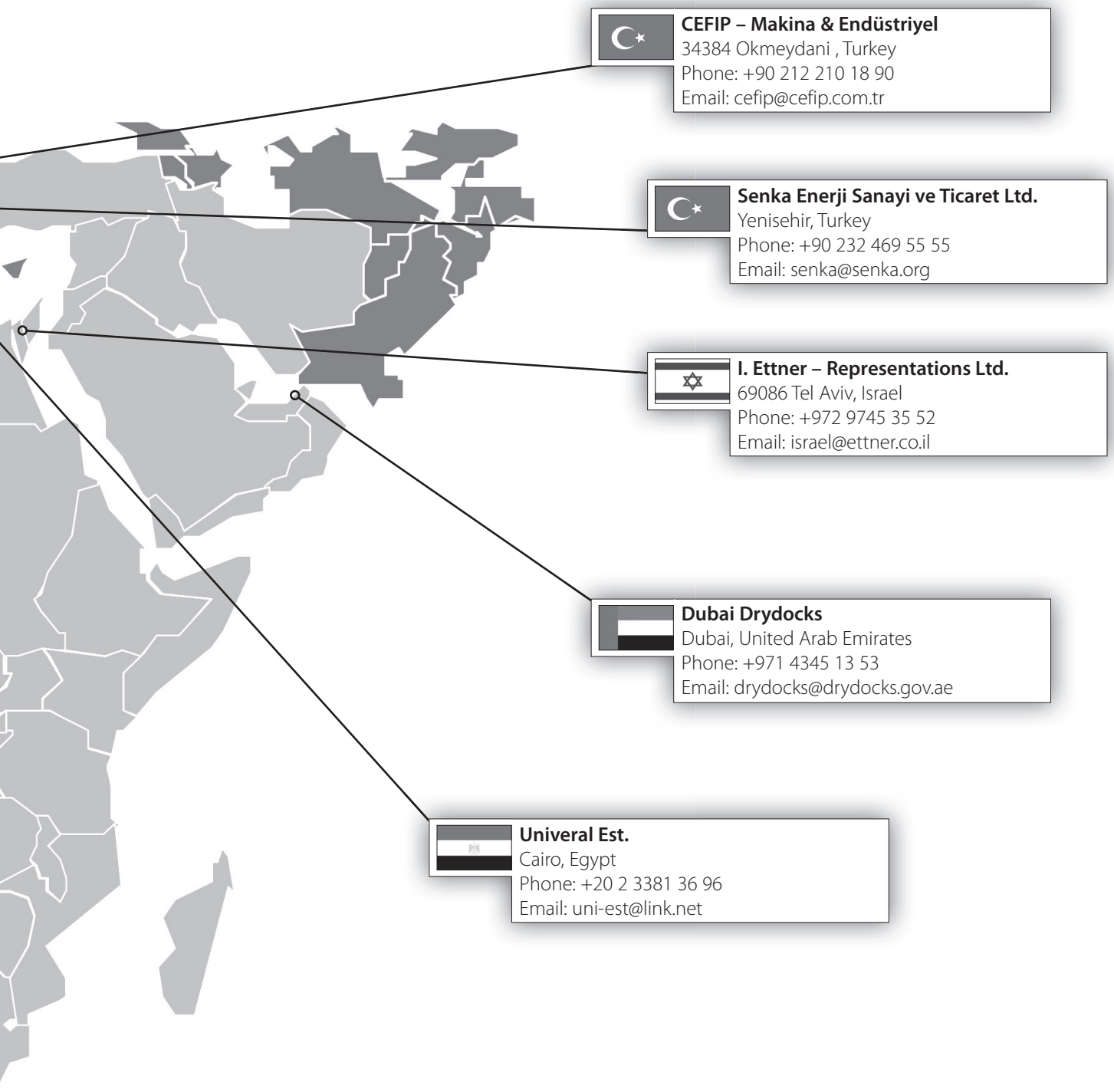

CEFIP – Makina & Endüstriyel
34384 Okmeydani , Turkey
Phone: +90 212 210 18 90
Email: cefip@cefip.com.tr

Senka Enerji Sanayi ve Ticaret Ltd.
Yenisehir, Turkey
Phone: +90 232 469 55 55
Email: senka@senka.org

I. Ettner – Representations Ltd.
69086 Tel Aviv, Israel
Phone: +972 9745 35 52
Email: israel@ettner.co.il

Dubai Drydocks
Dubai, United Arab Emirates
Phone: +971 4345 13 53
Email: drydocks@drydocks.gov.ae

Univeral Est.
Cairo, Egypt
Phone: +20 2 3381 36 96
Email: uni-est@link.net

BAUER global

NORTH AMERICA

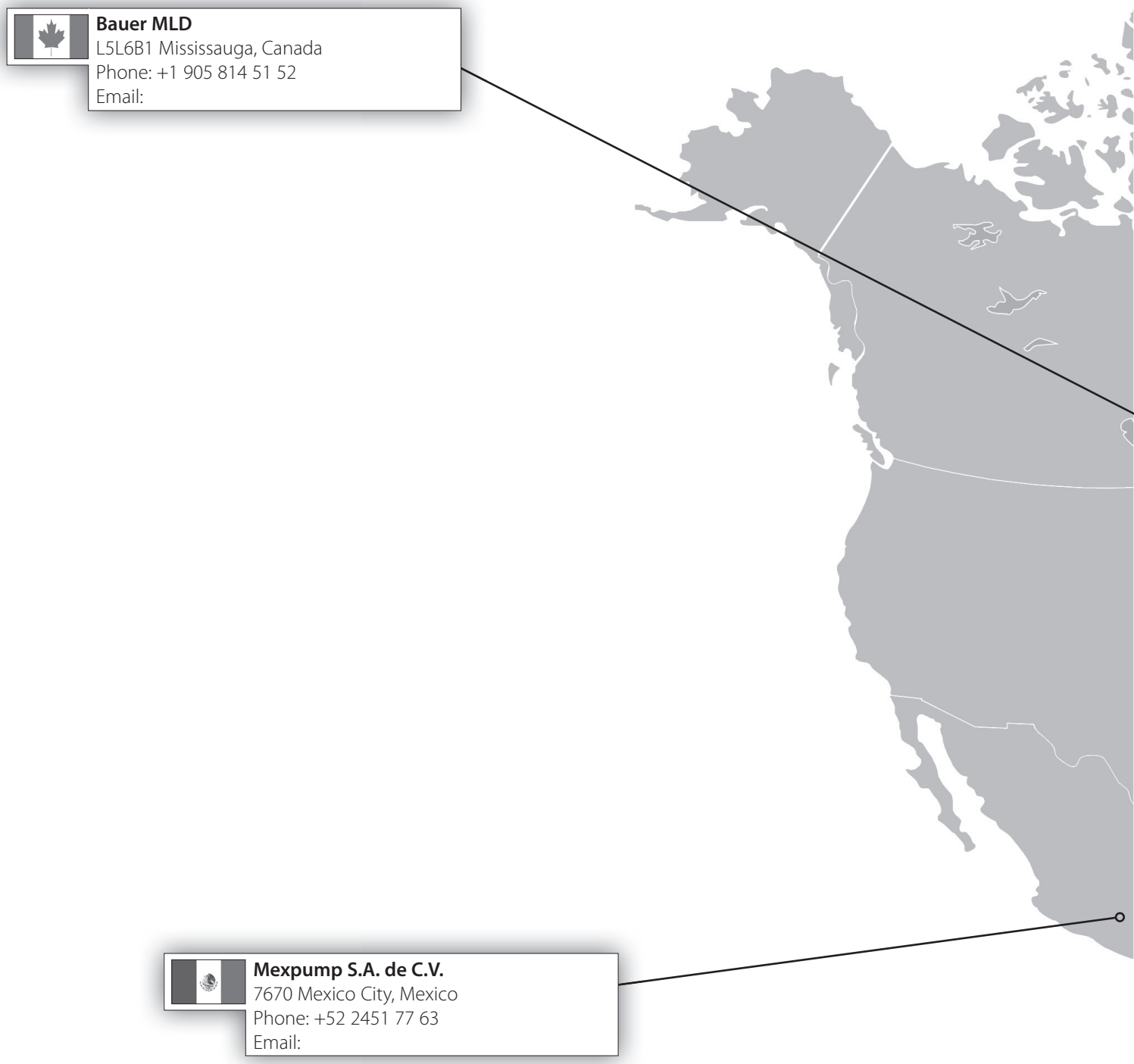

Bauer MLD
L5L6B1 Mississauga, Canada
Phone: +1 905 814 51 52
Email:

Mexpump S.A. de C.V.
7670 Mexico City, Mexico
Phone: +52 2451 77 63
Email:



Danfoss Bauer Inc.
NJ 08873-1212 Somerset, USA
Phone: +1 (732) 4698770
Email: salesinformation@danfoss.com

Gatterdam Electric
KY 40212 Louisville, USA
Phone: +1 502 776 39 37
Email: info@gatterdam.com

BAUER global

LATIN AMERICA



Juan Niemann & Cia. Ltda.
Guatemala City, Guatemala
Phone: +502 331 5454
Email: jcniemann@guate.net

Maquinarias Henriques
Guayaquil, Ecuador
Phone: +59 34 254 300
Email: controles@maquinarias-henriques.com

Jung y Cia LTDA
14478 Santiago de Chile, Chile
Phone: +56 26 383 731
Email: jung@jung.cl

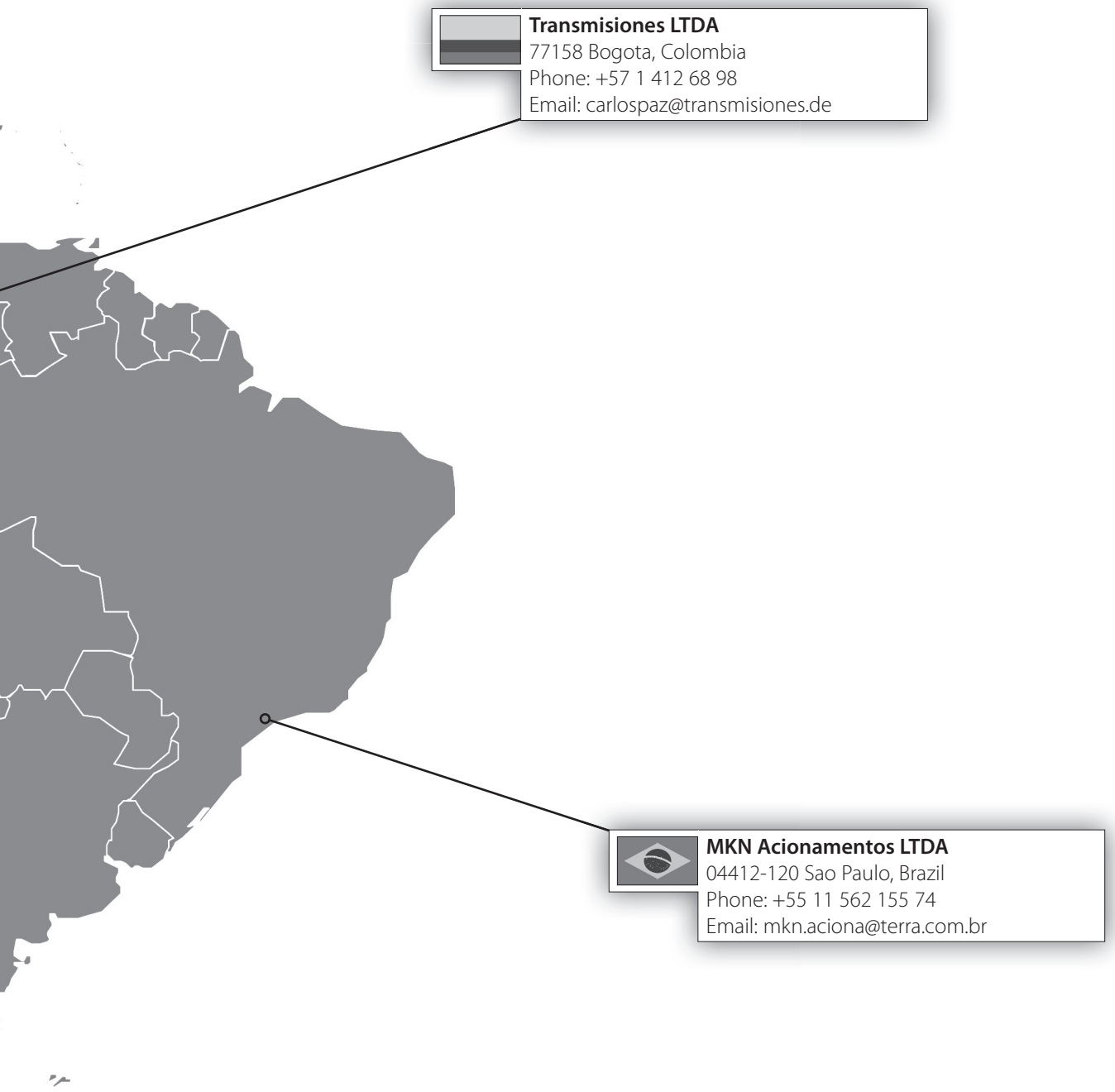

Transmisiones LTDA
77158 Bogota, Colombia
Phone: +57 1 412 68 98
Email: carlospaz@transmisiones.de

MKN Acionamentos LTDA
04412-120 Sao Paulo, Brazil
Phone: +55 11 562 155 74
Email: mkn.aciona@terra.com.br

BAUER global

RUSSIA

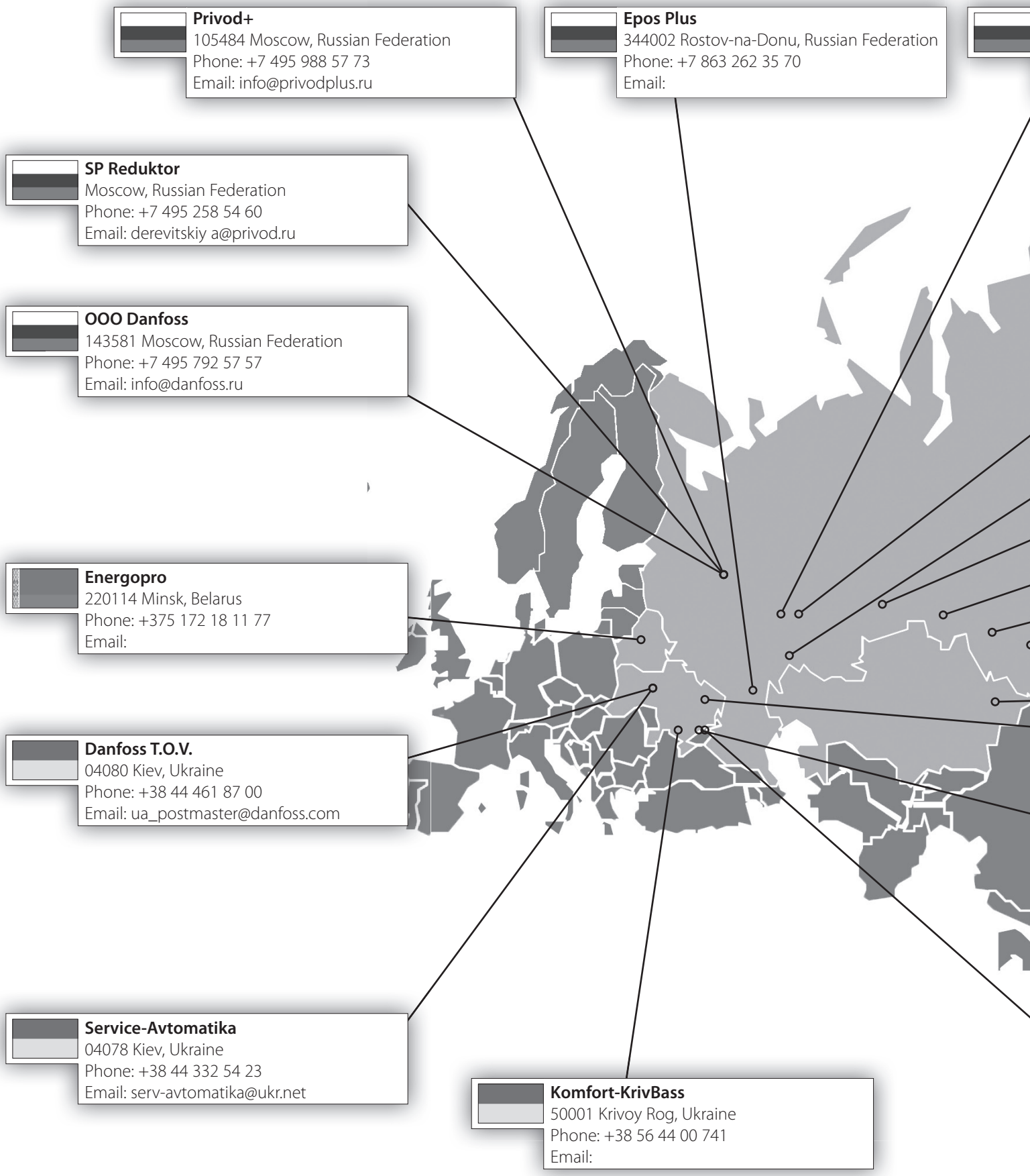

Privod+
105484 Moscow, Russian Federation
Phone: +7 495 988 57 73
Email: info@privodplus.ru

Epos Plus
344002 Rostov-na-Donu, Russian Federation
Phone: +7 863 262 35 70
Email:

SP Reduktor
Moscow, Russian Federation
Phone: +7 495 258 54 60
Email: derevitskiy a@privod.ru

OOO Danfoss
143581 Moscow, Russian Federation
Phone: +7 495 792 57 57
Email: info@danfoss.ru

Energopro
220114 Minsk, Belarus
Phone: +375 172 18 11 77
Email:

Danfoss T.O.V.
04080 Kiev, Ukraine
Phone: +38 44 461 87 00
Email: ua_postmaster@danfoss.com

Service-Avtomatika
04078 Kiev, Ukraine
Phone: +38 44 332 54 23
Email: serv-avtomatika@ukr.net

Komfort-KrivBass
50001 Krivoy Rog, Ukraine
Phone: +38 56 44 00 741
Email:

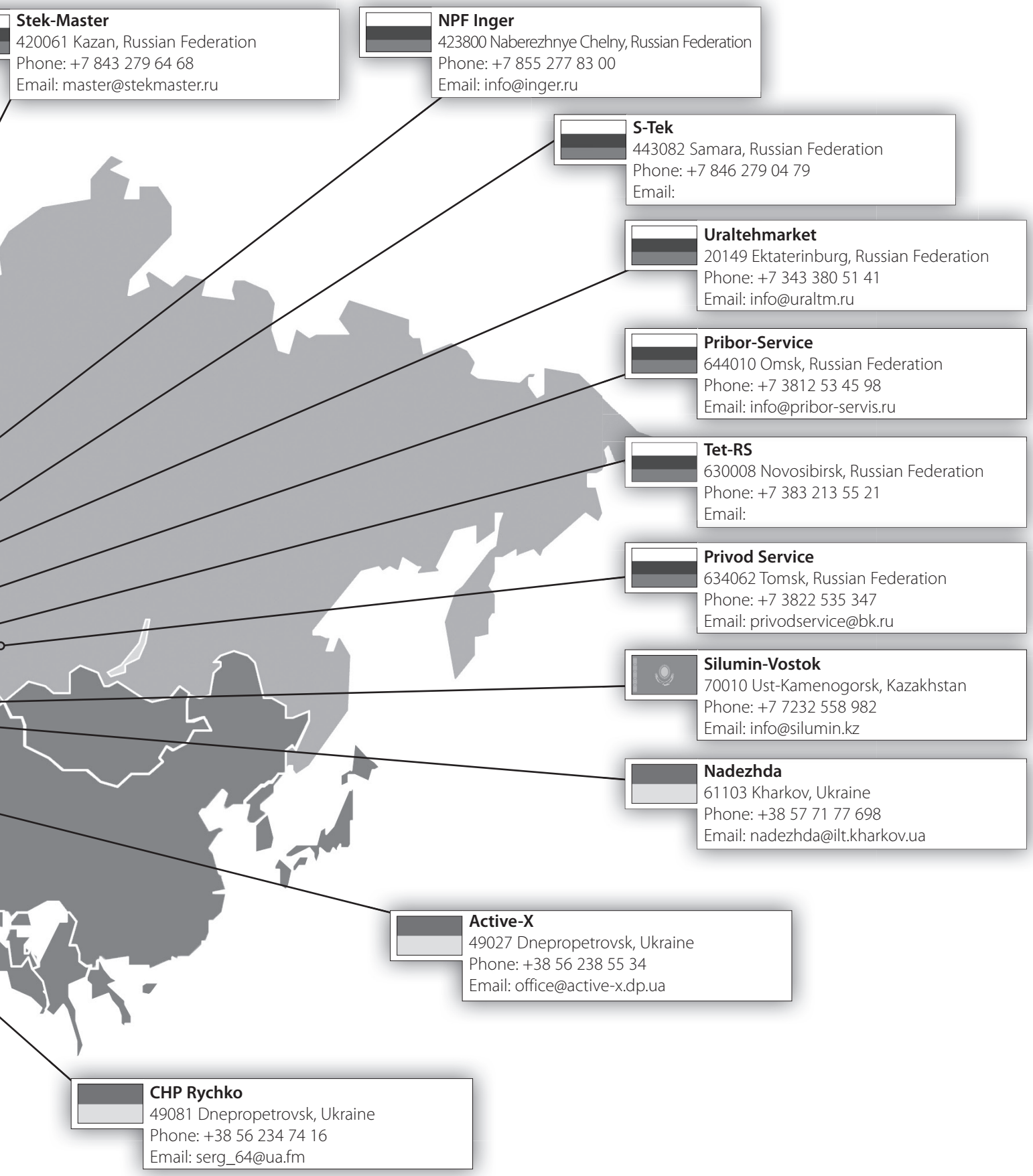

Stek-Master
420061 Kazan, Russian Federation
Phone: +7 843 279 64 68
Email: master@stekmaster.ru

NPF Inger
423800 Naberezhnye Chelny, Russian Federation
Phone: +7 855 277 83 00
Email: info@inger.ru

S-Tek
443082 Samara, Russian Federation
Phone: +7 846 279 04 79
Email:

Uraltehmarket
20149 Ektaterinburg, Russian Federation
Phone: +7 343 380 51 41
Email: info@uraltm.ru

Pribor-Service
644010 Omsk, Russian Federation
Phone: +7 3812 53 45 98
Email: info@pribor-servis.ru

Tet-RS
630008 Novosibirsk, Russian Federation
Phone: +7 383 213 55 21
Email:

Privod Service
634062 Tomsk, Russian Federation
Phone: +7 3822 535 347
Email: privodservice@bk.ru

Silumin-Vostok
70010 Ust-Kamenogorsk, Kazakhstan
Phone: +7 7232 558 982
Email: info@silumin.kz

Nadezhda
61103 Kharkov, Ukraine
Phone: +38 57 71 77 698
Email: nadezhda@ilt.kharkov.ua

Active-X
49027 Dnepropetrovsk, Ukraine
Phone: +38 56 238 55 34
Email: office@active-x.dp.ua

CHP Rychko
49081 Dnepropetrovsk, Ukraine
Phone: +38 56 234 74 16
Email: serg_64@ua.fm

BAUER global

ASIA PACIFIC

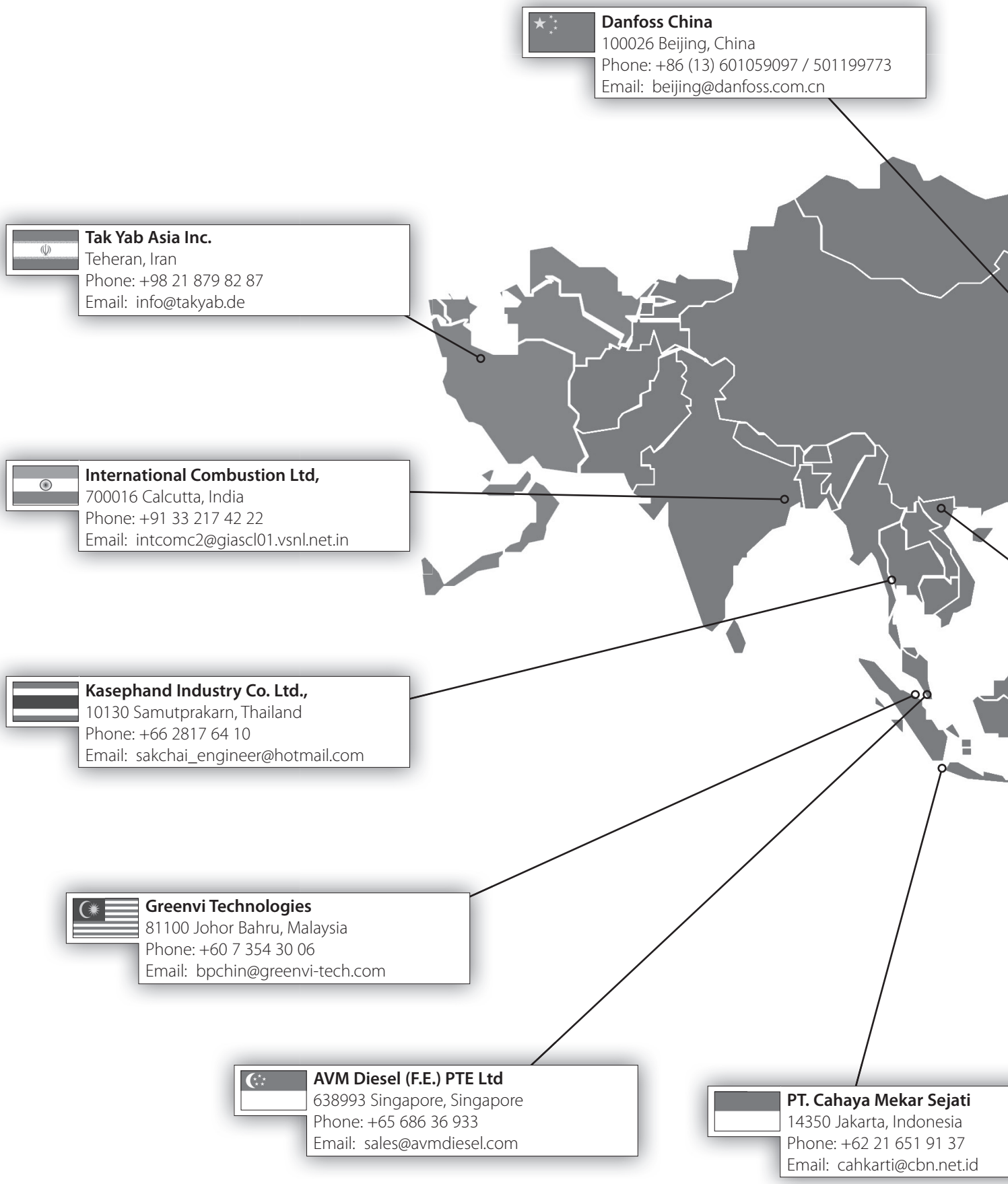

Danfoss China
100026 Beijing, China
Phone: +86 (13) 601059097 / 501199773
Email: beijing@danfoss.com.cn

Tak Yab Asia Inc.
Teheran, Iran
Phone: +98 21 879 82 87
Email: info@takyab.de

International Combustion Ltd,
700016 Calcutta, India
Phone: +91 33 217 42 22
Email: intcomc2@giascl01.vsnl.net.in

Kasephand Industry Co. Ltd.,
10130 Samutprakarn, Thailand
Phone: +66 2817 64 10
Email: sakchai_engineer@hotmail.com

Greenvi Technologies
81100 Johor Bahru, Malaysia
Phone: +60 7 354 30 06
Email: bpchin@greenvi-tech.com

AVM Diesel (F.E.) PTE Ltd
638993 Singapore, Singapore
Phone: +65 686 36 933
Email: sales@avmdiesel.com

PT. Cahaya Mekar Sejati
14350 Jakarta, Indonesia
Phone: +62 21 651 91 37
Email: cahkarti@cbn.net.id

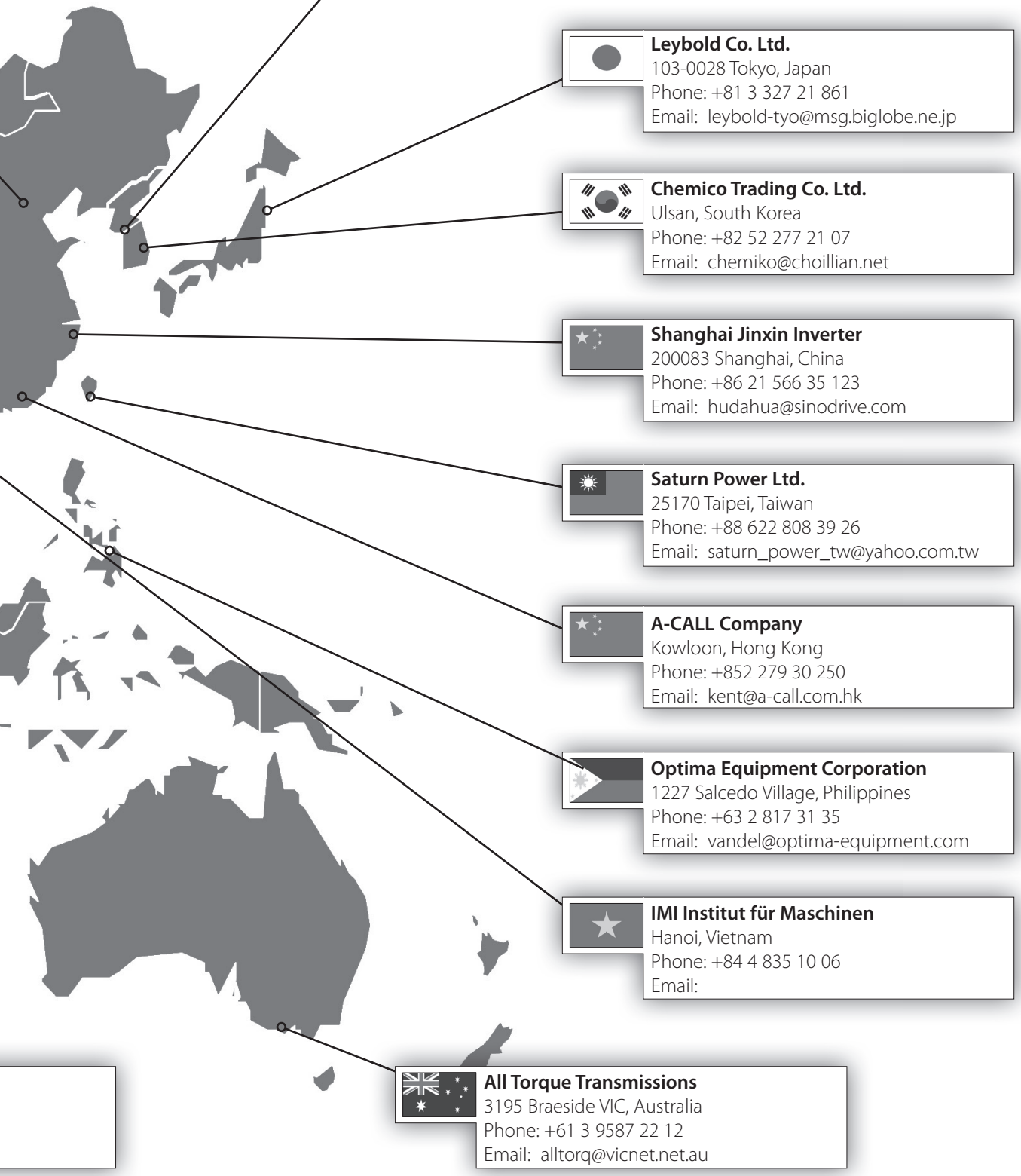

Chemico Trading Co. Ltd.
Seoul, South Korea
Phone: +82 2 567 53 36
Email: chemiko@chol.com

Leybold Co. Ltd.
103-0028 Tokyo, Japan
Phone: +81 3 327 21 861
Email: leybold-tyo@msg.biglobe.ne.jp

Chemico Trading Co. Ltd.
Ulsan, South Korea
Phone: +82 52 277 21 07
Email: chemiko@choillian.net

Shanghai Jinxin Inverter
200083 Shanghai, China
Phone: +86 21 566 35 123
Email: hudahua@sinodrive.com

Saturn Power Ltd.
25170 Taipei, Taiwan
Phone: +88 622 808 39 26
Email: saturn_power_tw@yahoo.com.tw

A-CALL Company
Kowloon, Hong Kong
Phone: +852 279 30 250
Email: kent@a-call.com.hk

Optima Equipment Corporation
1227 Salcedo Village, Philippines
Phone: +63 2 817 31 35
Email: vandel@optima-equipment.com

IMI Institut für Maschinen
Hanoi, Vietnam
Phone: +84 4 835 10 06
Email:

All Torque Transmissions
3195 Braeside VIC, Australia
Phone: +61 3 9587 22 12
Email: alltorq@vicnet.net.au

Notice

Notice

Notice

Notice

Notice